R & D facts

U.S. Department of Energy
Office of Fossil Energy
National Energy Technology Laboratory

Hydrogen Research

12/2006

Production of Hydrogen From Coal Via Process Intensification

The focus of this research is to assist in developing an economical and commercially viable technology to produce hydrogen from coal. The research directly supports the Department of Energy's Hydrogen from Coal Program.

Objective

To evaluate novel processes for producing hydrogen from coal and test the effects of coal gas impurities on water gas shift catalysts used to convert coal gas into hydrogen. The research aims to combine carbon dioxide and hydrogen separation technologies with water gas shift reactions using fewer steps ("process intensification").

Technical Challenges

Catalyst performance and endurance under coal gas conditions and compositions including trace contaminants; Catalyst integration with CO_2 or H_2 sorbents.

Description

The goal of DOE "Hydrogen from Coal Program" is to facilitate the transition to a sustainable hydrogen economy through the use of coal. Hydrogen is a naturally occurring element found in many materials such as coal, water, natural gas, and biomass. Of these, coal is the most abundant resource for producing hydrogen, and

NETL Research Laboratory

CONTACTS

Abolghasem Shamsi
Leader, Hydrogen Production/ Reforming Research Group
Separations and Fuels Processing Division
National Energy Technology Laboratory
3610 Collins Ferry Road
P.O. Box 880
Morgantown, WV 26507
304-285-4360
abolghasem.shamsi@netl.doe.gov

Abbie Layne
Director
Separations and Fuels Processing Division
National Energy Technology Laboratory
3610 Collins Ferry Road
P.O. Box 880
Morgantown, WV 26507
304-285-4603
abbie.layne@netl.doe.gov

Daniel C. Cicero
Hydrogen and Syngas Technology Manager
3610 Collins Ferry Road
P.O. Box 880
Morgantown, WV 26507-0880
304-285-4826
daniel.cicero@netl.doe.gov

the United States has more than a 250-year supply of coal. Compared to natural gas (methane = 25 percent H_2), coal contains about 6 percent hydrogen. In order to produce hydrogen, coal must be reacted (gasified) with steam, air/oxygen or both, producing synthesis gas or syngas (CO and H_2). Syngas can be cleaned by removing impurities and converted to additional hydrogen via water gas shift reaction. Finally, syngas can be separated and purified for use as fuel or in refineries, producing liquid fuels and chemicals. Furthermore, water gas shift reaction can be integrated with hydrogen and CO_2 separation processes in order to produce pure CO_2 for sequestration.

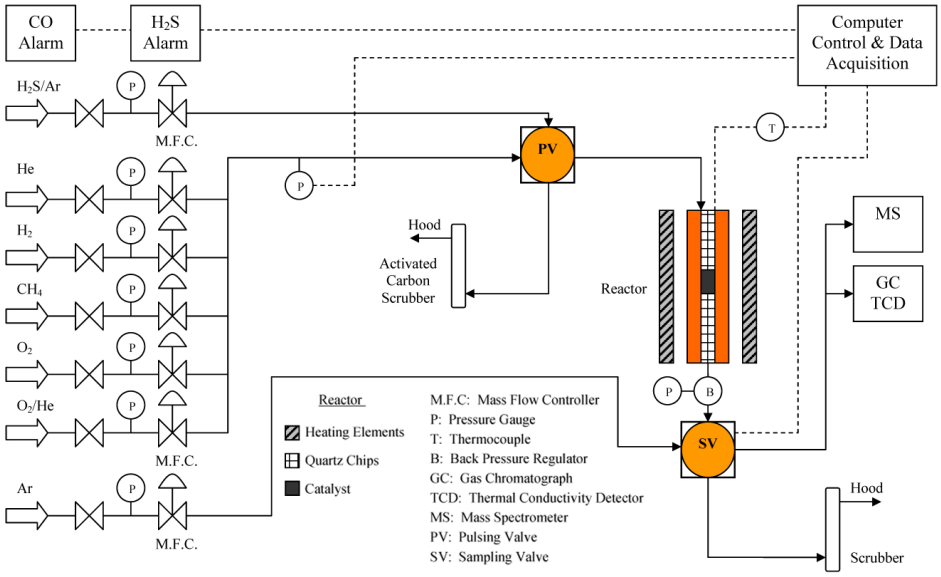

Reactor Flow Diagram

Current Activities

- Novel catalyst preparation
- Catalyst testing
- Catalyst characterization
- Systems studies

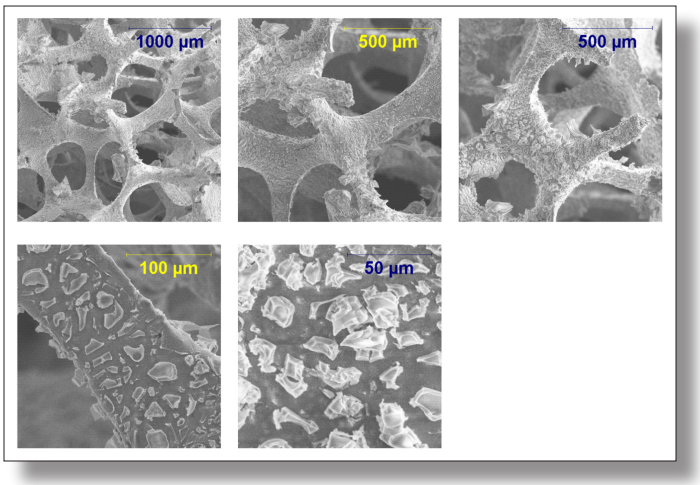

SEM Photograph of Metal-supported Catalyst Developed at NETL

COLLABORATORS

West Virginia University
Morgantown, WV

Carnegie Mellon University
Pittsburgh, PA

University of Pittsburgh
Pittsburgh, PA

ADDRESS

National Energy Technology Laboratory
1450 Queen Avenue SW
Albany, OR 97321-2198
541-967-5892

2175 University Avenue South
Suite 201
Fairbanks, AK 99709
907-452-2559

3610 Collins Ferry Road
P.O. Box 880
Morgantown, WV 26507-0880
304-285-4764

626 Cochrans Mill Road
P.O. Box 10940
Pittsburgh, PA 15236-0940
412-386-4687

One West Third Street, Suite 1400
Tulsa, OK 74103-3519
918-699-2000

CUSTOMER SERVICE

1-800-553-7681

WEBSITE

www.netl.doe.gov