R & D facts

U.S. Department of Energy
Office of Fossil Energy
National Energy Technology Laboratory

Gasification Technologies

09/2008

IGCC Dynamic Simulator Research and Training Center

Description

To meet growing demand for education and experience with the analysis, operation, and control of Integrated Gasification Combined Cycle (IGCC) plants, the National Energy Technology Laboratory (NETL) is leading a collaborative R&D project to develop a full-scope, high-fidelity, real-time dynamic simulator for a generic IGCC plant with carbon capture. The IGCC simulator will combine a process/gasification simulator and a power/combined-cycle simulator together in a single dynamic simulation framework for use in research and development as well as engineering studies. NETL will use the simulator to establish a flagship IGCC Dynamic Simulator Research & Training (DSR&T) Center at NETL in Morgantown, WV and a satellite location at West Virginia University's (WVU) National Research Center for Coal and Energy. The world-class DSR&T Center will be established under the auspices of the Collaboratory for Process & Dynamic Systems Research, a major research thrust area in NETL's recently launched Institute for Advanced Energy Solutions (IAES) with Carnegie Mellon University, the University of Pittsburgh, and WVU. NETL and its Collaboratory R&D partners will use the IGCC simulator to showcase clean coal technology as a technically feasible way to support future power generation demand without emitting greenhouse gases. NETL will also offer much-needed demonstration, education, and training services such as IGCC plant operation and control demonstrations, technology familiarization, and hands-on computer-based training.

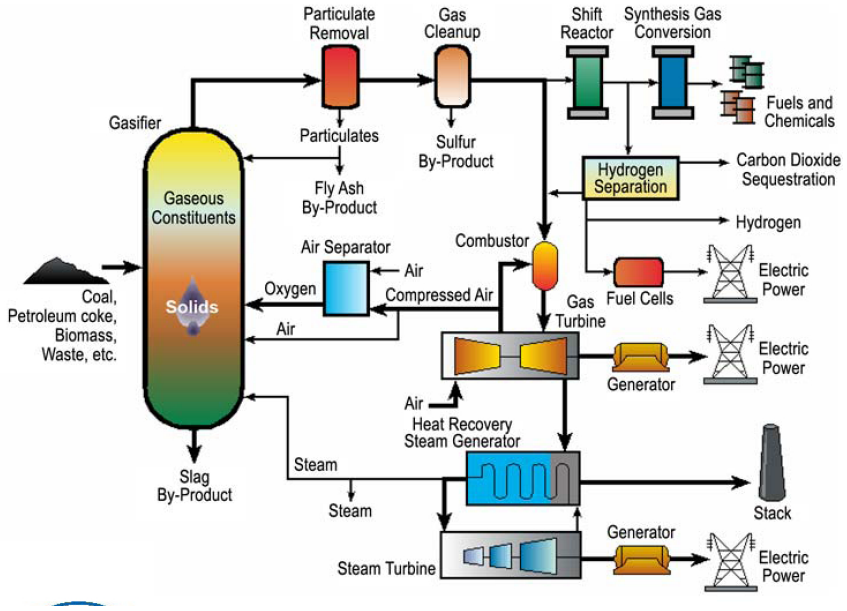

Integrated Gasification Combined Cycle Plant

CONTACTS

Gary J. Stiegel
Gasification Technology Manager
National Energy Technology Laboratory
626 Cochrans Mill Road
P.O. Box 10940
Pittsburgh, PA 15236
412-386-4499
gary.stiegel@netl.doe.gov

Stephen E. Zitney
Computational Science Division
National Energy Technology Laboratory
3610 Collins Ferry Road
P. O. Box 880
Morgantown, WV 26507
304-285-1379
stephen.zitney@netl.doe.gov

PARTNERS

Carnegie Mellon University
Pittsburgh, PA

University of Pittsburgh
Pittsburgh, PA

West Virginia University
Morgantown, WV

ADDRESS

National Energy Technology Laboratory
1450 Queen Avenue SW
Albany, OR 97321-2198
541-967-5892

2175 University Avenue South
Suite 201
Fairbanks, AK 99709
907-452-2559

3610 Collins Ferry Road
P.O. Box 880
Morgantown, WV 26507-0880
304-285-4764

626 Cochrans Mill Road
P.O. Box 10940
Pittsburgh, PA 15236-0940
412-386-4687

One West Third Street, Suite 1400
Tulsa, OK 74103-3519
918-699-2000

CUSTOMER SERVICE

1-800-553-7681

WEBSITE

www.netl.doe.gov

Major Project Phases

The multi-year R&D project to develop the IGCC dynamic simulator and establish the DSR&T Center consists of five consecutive and overlapping phases:

- Phase I – Scoping Study (Completed)
- Phase II – Detailed Planning (Completed)
- Phase III – IGCC Dynamic Simulator Development (18-24 months)
- Phase IV – Acceptance Testing/Deployment at DSR&T Center (12 months)
- Phase V – Establishment (12 months) and On-going Support of DSR&T Center

Primary Project Goals

- Develop and deploy a generic, full-scope, complete-plant IGCC real-time dynamic simulator
- Establish an IGCC DSR&T Center to provide research, education, training, and demonstration capabilities for electric utilities, engineering and construction firms, gasifier and carbon capture technology suppliers, NETL system analysts, university engineering and training R&D community, and others interested in learning more about IGCC plant operations and control
- Implement strategic R&D collaborations among key IGCC technology partners, including leading training simulator software and service providers
- Form a users' group to promote collaboration between the project team and industry, provide feedback to ensure project team is meeting industry needs, and promote awareness to the energy and process industries

Key Dynamic Simulator Features

- High-fidelity, real-time dynamic model of process-side (gasification) and power-side (combined cycle) for a generic, commercial-scale IGCC plant with carbon capture
- Full-scope dynamic simulator capabilities including complete cold, warm, and hot startups; shutdowns; load changes; normal, abnormal and emergency operating conditions; control strategy analysis; malfunctions/trips and alarms; scenarios, trending, and snapshots; data historian; and trainee performance monitoring
- Extendable to incorporate additional gasification, gas turbine, and carbon capture technologies, as well as new, advanced technologies such as fuel cells and membrane separation systems

Benefits

The impact and benefit of the IGCC DSR&T Center is as follows:

- Provides the NETL Collaboratory for Process & Dynamic Systems Research with a world-class IGCC research, training, and education resource
- Serves as a focal point for collaborative IGCC research and development with universities, software and service providers, and the power and energy industries
- Satisfies the growing industry demand for education and experience with the analysis, operation, and control of commercial-scale IGCC plants with carbon capture
- Accelerates the development of advanced process and dynamic systems modeling technology to better achieve the aggressive design, operability, and controllability goals for high-efficiency, zero-emission power plants

IGCC Dynamic Simulator and Research Center