R & D facts

U.S. DEPARTMENT OF ENERGY
OFFICE OF FOSSIL ENERGY
NATIONAL ENERGY TECHNOLOGY LABORATORY

OSTA
Hydrogen Research

12/2004

PRODUCTION OF HYDROGEN FROM NATURAL GAS AND H_2S-CONTAINING NATURAL GAS

The focus of this research is to develop an economical and commercially viable technology to directly convert natural gas and H_2S-containing natural gas into valuable hydrogen and sulfur products.

Objective

As the nation moves toward a hydrogen-based economy, NETL's Hydrogen Production/Reforming Research Group is investigating methods to produce hydrogen from natural gas and H_2S-containing gases. Hydrogen, as a clean alternative fuel, holds promise as a blend for internal combustion engines, to power fuel cells, and to upgrade crude oil, develop chemicals, and produce liquid fuels in refineries. Despite its enormous potential, hydrogen to date cannot be economically produced from waste gases. Investigators are developing advanced materials and technology that can economically convert natural gas and H_2S-containing gases into hydrogen.

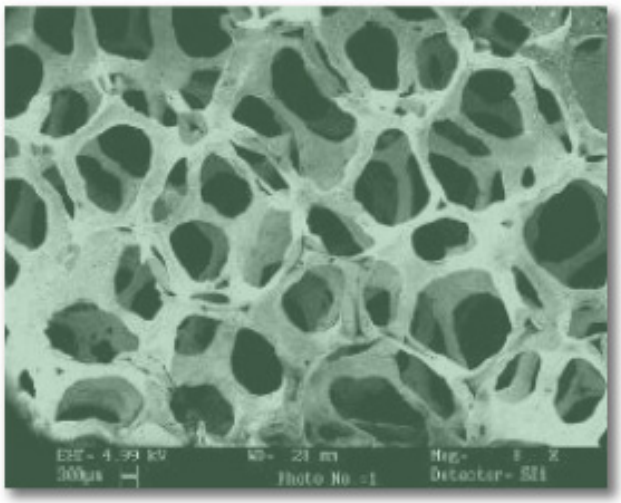

Metal-Foam Ni-MgO Catalyst Developed at NETL

National Energy Technology Laboratory

626 Cochrans Mill Road
P.O. Box 10940
Pittsburgh, PA 15236-0940
412-386-4687
412-386-4604 fax

3610 Collins Ferry Road
P.O. Box 880
Morgantown, WV 26507-0880
304-285-4764
304-285-4403 or 4469 fax

One West Third Street, Suite 1400
Tulsa, OK 74103-3519
918-699-2000
918-699-2005 or 2048 fax

P.O. Box 750172
539 Duckering Bldg./
UAF Campus
Fairbanks, AK 99775-0172

CUSTOMER SERVICE

1-800-553-7681

WEBSITE

www.netl.doe.gov

CONTACT POINTS

Abolghasem Shamsi, Ph.D.
Leader
Hydrogen Production/
Reforming Research Group
Separations and Fuels
Processing Division
304-285-4360
Abolghasem.Shamsi@netl.doe.gov

Daniel Cicero
Director
Separations and Fuels
Processing Division
304-285-4826
Daniel.Cicero@netl.doe.gov

Venkat Venkataraman, Ph.D.
Technology Manager
Petroleum Fuels Coordinator
304-285-4105
Venkat.Venkataraman@netl.doe.gov

COLLABORATORS

Louisiana State University
Baton Rouge, Louisiana

Porvair Fuel Cell Technology (metal foams).
Hendersonville, North Carolina

The University of Oklahoma
Oklahoma City, Oklahoma

Carnegie Mellon University
Pittsburgh, Pennsylvania

University of Pittsburgh
Pittsburgh, Pennsylvania

Current Activities

- Novel catalyst preparation
- Catalyst testing
- Catalyst characterization
- Systems studies
- Computational chemistry

Description

The Group focus is on solving technical problems associated with the development of a catalytic process that produces low-cost hydrogen from natural gas and H_2S-containing natural gas in an environmentally acceptable manner. The Group conducts basic and applied research integrated with computational studies on new and novel reforming technologies that produce hydrogen and hydrogen-rich fuels for fuel cells and gas turbines. The Group expects to (1) demonstrate low-temperature reforming technologies for a new generation of fuel cells, thereby producing higher electrical power generation efficiency with lower emissions; (2) provide scientific knowledge for developing and testing new and novel catalysts for reforming and partial oxidation of natural gas as well as low-grade (H_2S-containing) natural gas; (3) characterize sulfur-tolerant catalytic materials and the reaction products; test catalyst activity, selectivity, and longevity; and determine hydrogen production efficiency; and (4) generate sufficient data to perform system studies and confirm expected economic and environmental improvements over current technologies.

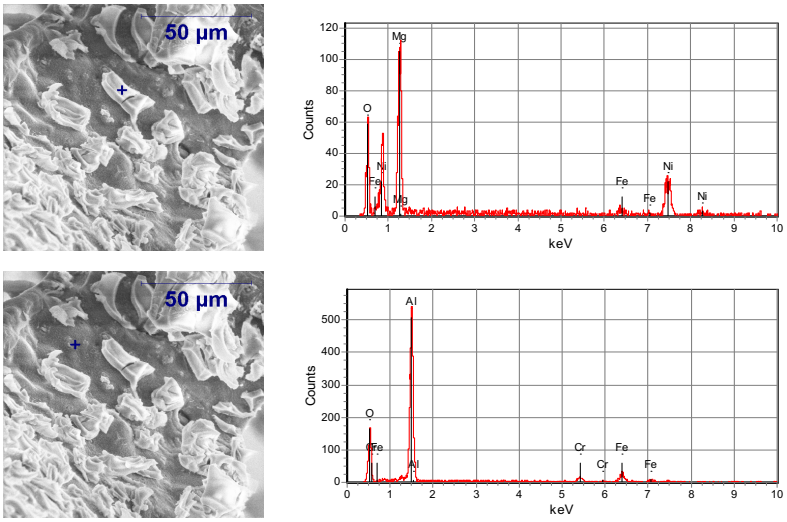

SEM/EDX of Metal Foam Catalyst

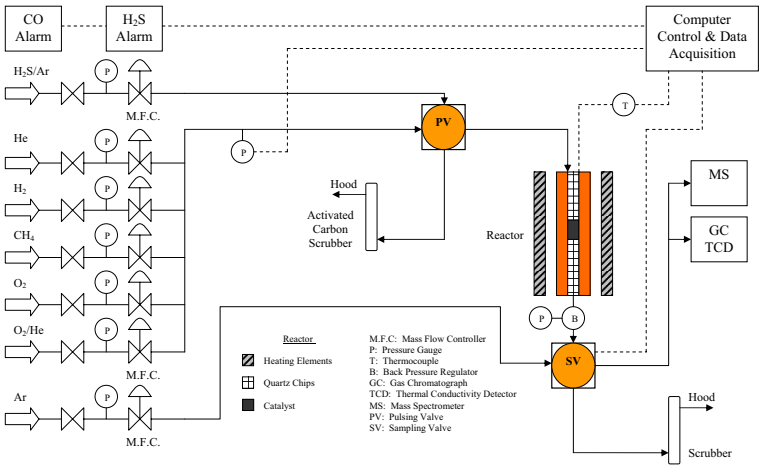

Reactor Flow Diagram