DOE/MC/85000-95/C0477

Geotechnology for Low-Permeability Gas Reservoirs, 1995

Authors:

Stephen Brown
Hugo Harstad
John Lorenz
Norman Warpinski
Trent Boneau
David Holcomb
Lawrence Teufel
Christopher Young

Conf-950494--22

Contractor:

Sandia National Laboratory
Geomechanics Department 6117, MS0751
P.O. Box 5800
Albuquerque, New Mexico 87185-0751

Contract Number:

DE-AC04-94AL85000

Conference Title:

Natural Gas RD&D Contractor's Review Meeting

Conference Location:

Baton Rouge, Louisiana

Conference Dates:

April 4 - 6, 1995

Conference Sponsor:

Co-Hosted by Department of Energy (DOE)
Morgantown Energy Technology Center
Morgantown, West Virginia
and
Southern University and
Agricultural and Mechanical College
Baton Rouge, Louisiana

MASTER

DISTRIBUTION OF THIS DOCUMENT IS UNLIMITED

DISCLAIMER

This report was prepared as an account of work sponsored by an agency of the United States Government. Neither the United States Government nor any agency thereof, nor any of their employees, makes any warranty, express or implied, or assumes any legal liability or responsibility for the accuracy, completeness, or usefulness of any information, apparatus, product, or process disclosed, or represents that its use would not infringe privately owned rights. Reference herein to any specific commercial product, process, or service by trade name, trademark, manufacturer, or otherwise does not necessarily constitute or imply its endorsement, recommendation, or favoring by the United States Government or any agency thereof. The views and opinions of authors expressed herein do not necessarily state or reflect those of the United States Government or any agency thereof.

This report has been reproduced directly from the best available copy.

Available to DOE and DOE contractors from the Office of Scientific and Technical Information, 175 Oak Ridge Turnpike, Oak Ridge, TN 37831; prices available at (615) 576-8401.

Available to the public from the National Technical Information Service, U.S. Department of Commerce, 5285 Port Royal Road, Springfield, VA 22161; phone orders accepted at (703) 487-4650.

DISCLAIMER

Portions of this document may be illegible in electronic image products. Images are produced from the best available original document.

Geotechnology for Low Permeability Gas Reservoirs, 1995*

CONTRACT INFORMATION

Contract Number	DE-AC04-94AL85000 (FEW 2086)
Contractor	Sandia National Laboratories Geomechanics Department 6117, MS0751 P. O. Box 5800 Albuquerque, NM 87185-0751 (505) 844-4342 (telephone) (505) 844-7354 (telefax)
Other Funding Sources	
Contractor Project Manager	Wolfgang R. Wawersik David A. Northrop
Principal Investigators	Stephen R. Brown Trent Boneau Hugo Harstad David J. Holcomb John C. Lorenz Lawrence W. Teufel Norman R. Warpinski Christopher J. Young
.METC Project Manager	Royal J. Watts
Period of Performance	October 1, 1993 to February 28, 1995

• This work was performed at Sandia National Laboratories, which is operated for the U. S. Dept. of Energy under contract number DE-AC04-94AL85000.

MASTER

Schedule and Milestones FY94 - FY95 Program Schedule

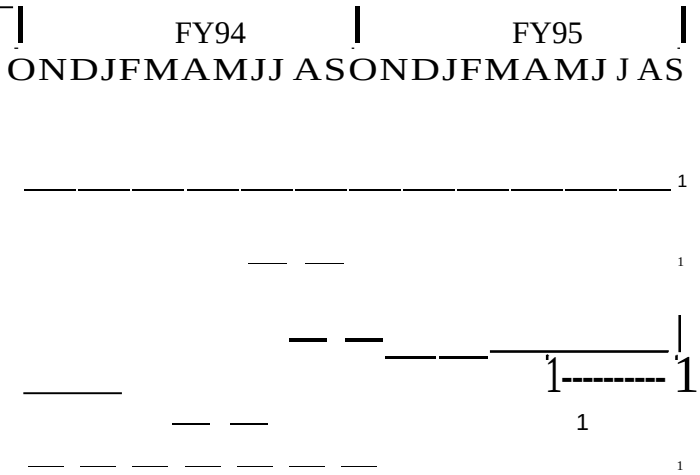

OBJECTIVES

The objectives of this program are to (1) apply and refine a basinal and local analysis methodology for natural fracture exploration and exploitation, and (2) determine the important characteristics of natural fracture systems for their use in completion, stimulation, and production operations.

BACKGROUND OF OVERALL PROJECT

The permeability, and thus the economics, of tight reservoirs are largely dependent on natural fractures, and on the in situ stresses that both originated fractures and control subsequent fracture permeability. Natural fracture permeability ultimately determines the gas (or oil) producibility from the rock matrix. Therefore, it is desirable to be able to predict, both prior to drilling and during reservoir production, (1) the natural fracture characteristics, (2) the mechanical and transport properties of fractures and the surrounding rock matrix, and (3) the present in situ stress magnitudes and orientations.

The project is a follow-on of a systematic study at the Multiwell Experiment (MWX) Site (now M-Site) in the southern Piceance basin which demonstrated the importance of natural fractures for gas production from tight reservoirs. The study was aided by extensive measurements of the in situ stress state, its variation with lithology, and its influence on the permeability anisotropy in reservoirs. The study was supported by a geomechanics laboratory program to examine the applicability of the conventional effective stress parameter, o, to develop methods for determining α, and to determine the effect of stress path on reservoir petrophysical properties and reservoir response.

The combination of activities described in this report extends the earlier work to other Rocky Mountain gas reservoirs. Additionally, it extends the fracture characterizations to attempts of crosswell geophysical fracture detection using shear wave birefringence and to obtaining detailed quantitative models of natural fracture systems for use in improved numerical reservoir simulations. Finally, the project continues collaborative efforts

to evaluate and advance cost-effective methods for in situ stress measurements on core.

CURRENT ACTIVITIES

Fracture Characterization and Basin Modeling in the Green River Basin

Background. Sandstones of the Frontier formation contain significant volumes of natural gas, and relatively shallow Frontier reservoirs have been successfully tapped with vertical wells in several areas of the basin (i.e., over the Moxa Arch). The Frontier formation also contains important volumes of gas where it is more deeply buried, but the economics of accessing that gas are currently unfavorable due to uncertainties in the characteristics of the permeability-enhancing natural fractures at depth. Work in 1994 has focused on the characterization of natural fractures in outcrop, and on methods for predicting fracture characteristics and in situ stresses in the deeper parts of the basin. Such predictions are useful in efficient application of advanced technologies (such as horizontal drilling) to the problem of extraction of natural gas from deep, fractured reservoirs.

Project Description and Results. During the summer of 1994, field work was designed to map and otherwise characterize natural fractures in outcrops of Frontier sandstones at the margins of the basin. The natural fractures in specific outcrops of Frontier sandstone, located along the margins of the Greater Green River basin, have been mapped in detail (Figures 1, 2). Mapping has shown that although fracture characteristics, primarily orientations, vary significantly in different parts of the basin, there is usually a through-going, older fracture set that is connected by younger, shorter, cross fractures. The younger fractures terminate at intersections with the older set and are commonly related to surface exposure; they are thus inferred to be rare in the subsurface where stress release or later tectonism have not occurred.

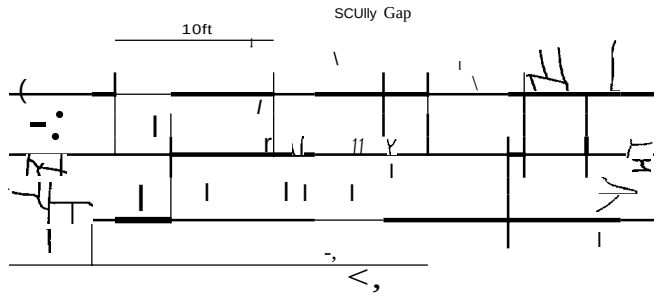

Figure 1. Map of planview fractures on sandstone bedding plane of Frontier formation at southwestern edge of the Green River basin. Through-going fractures trend north-south.

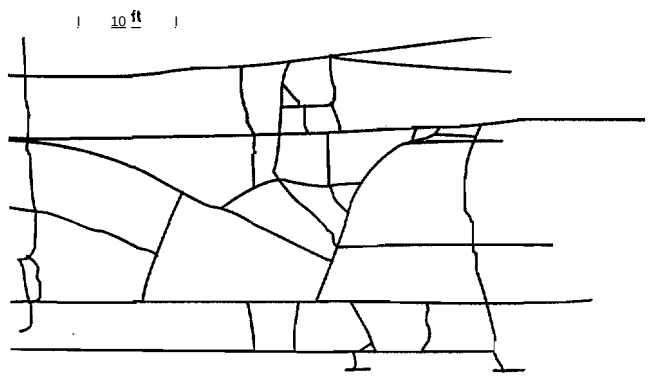

Figure 2. Map of planview fractures on sandstone bedding plane of Frontier formation at southwestern edge of the Green River basin. Through-going fractures trend north-south.

Populations of fracture parameters in Frontier outcrops display Weibull patterns that are similar to other fracture populations: i.e., frequency diminishes with length. This holds for fracture lengths and fracture spacings, and probably for fracture apertures. (Apertures are

not definitive in outcrops where significant weathering has occurred). Most outcrops are extensively fractured, and thus fracture "swarms" are rare. Bed thickness has some control on fracture spacing: thicker beds are less intensely fractured as a general rule, although a consistent, mathematical relationship is not yet evident.

The geometry of outcrop fracture patterns can be analyzed and is being used to calculate the most likely characteristics of the permeability enhancement due to a given fracture pattern. Progress along these lines is detailed in a later section of this paper. However, it is immediately relevant that permeability enhancement appears to be most sensitive to fracture apertures, whereas fracture orientations and lengths dictate the orientation and degree of permeability anisotropy, respectively.

Characterization of outcrop fracture patterns is a worthwhile exercise only if one or more aspects of the fractures in outcrop are analogous to fractures in subsurface reservoirs. The tectonic/stress histories of a given suite of strata may locally be similar for both outcrop and subsurface occurrences. In these circumstances the fracture patterns seen in outcrop would be expected to be similar to the reservoir fractures. However, it is also likely that the outcropping strata have been uplifted and exposed by secondary geologic events that did not effect the equivalent subsurface strata. In this case, only one or none of the fracture sets from the outcrops may have a subsurface analog. Thus, through-going fractures are inferred to have direct application to the subsurface whereas the shorter cross fractures are considered to be surface related.

The reconstructed stresses derived from tectonic events have been cross-referenced to a reconstruction of the fracture susceptibility of the strata through time, in order to indicate when, and in what orientation, fractures are likely to have formed. Fracture susceptibility is largely a function of the effective stress on the strata, which in turn is a combination of stresses derived from depth of burial, tectonic compression/extension, and pore pressure (Lorenz et al., 1993).

Several large-scale thrusts indent into the basin margins, creating local compression that increased the differential horizontal stress within the adjacent strata. Strata immediately adjacent to thrusts underwent the most severe compression, which also served to increase local pore pressure. Strata further from the thrust fronts experienced significantly less differential stress. The Laramide Wind River and Uinta Mountains thrust systems are inferred to have imparted significantly more stress in the mid-basin strata than the thin-skinned Sevier thrust belt to the west. Organic material within the more deeply buried strata underwent higher levels of maturation, resulting in larger volumes of natural gas and higher pore pressures, thus increased fracture susceptibilities in the deepest parts of the basin. Stress orientations and dominant fracturing within the deep, mid-basin strata are suggested by preliminary modeling to trend north-south between the Wind River and the Uinta Mountains thrusts. Further knowledge of the detailed local structure of the basin center may alter these conclusions.

Present-day conditions provide a tie-point for this modeling effort: if the model can replicate the present stress orientations across the basin, a degree of confidence can be inferred for the model and its sometimes subjective input parameters. Figure 3 portrays the few data points available on present in situ stress orientations, as measured from wellbore breakouts (oriented caliper logs) across the western part of the Green River basin. This map suggests that maximum horizontal stress is commonly oriented normal to an adjacent thrust front, or along a line between two nearby thrusts, as suggested by the model.

Ten of the better exposures of the Frontier Formation sandstone outcrops around the basin have been mapped, and four of these will be characterized in detail. A separate report describing the tectonic history of the basin and the fracture susceptibility through time of the strata will make preliminary predictions of the fracture orientations and stresses in the central, deep parts of the Green River basin.

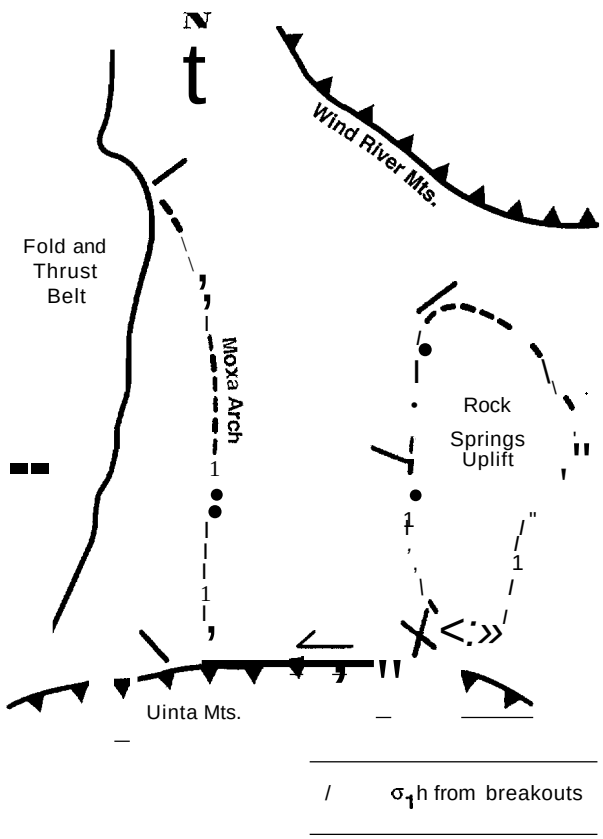

Figure 3. Present-day in situ maximum horizontal compressive stresses in the Green River basin derived from wellbore breakouts.

Geophysical Fracture Mapping

Background. The presence of a natural fracture has been shown to cause seismic anisotropy in an in situ rock mass (Beydoun et al, 1985). In seismic data, this anisotropy manifests itself as shear wave birefringence, or simply, shear wave splitting. Observations of this wave splitting represent a potential tool for determining the density and azimuthal distribution of a natural fracture system.

When an S-wave passes through an anisotropic medium, the particle motion IS polarized into two orthogonal components of differing velocities normally referred to as the S1 (fast), and S2 (slow), wave (Crampin 1989). The faster polarization corresponds to particle motion in the direction in which the rock is the least compliant, while the slower wave is polarized in the most compliant direction. As the S-waves propagate, the separation between the S1 and S2 waves becomes larger until shear wave splitting can potentially be observed. Birefringence is normally characterized by this time "lag" which represents the density of the fractures, and the wave polarization angles which describe the orientation of the anisotropy.

Traditionally, shear wave splitting has been identified in reflection surveys utilizing surface sources and receivers. In that case, the fast shear wave is polarized parallel to the fracture direction and the slow wave has particle motion perpendicular to the fracture system. However, S-wave particle motions are not necessarily confined to those orientations for non-vertical ray paths such as those found in a crosswell data set (Liu et al, 1989).

An extensive crosswell velocity survey was conducted in 1993 at the M-Site as part of the GRI project on hydraulic fracture detection. Seismic surveys were performed using triaxial receivers with over ten thousand source-receiver combinations between two wells separated by approximately two hundred feet. S-wave data in the survey were quite prominent and offer a

uruque opportunity to investigate the effects of natural fractures on crosswell shear waves (Figure 4).

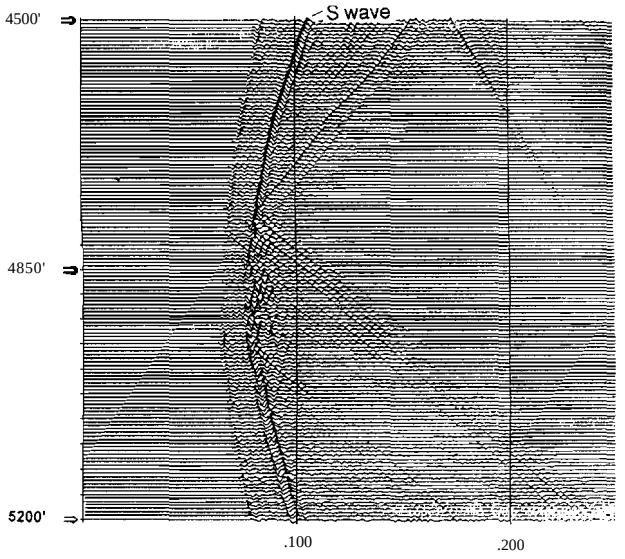

Figure 4. Airgun depth-time records showing evidence of shear wave propagation in M-Site crosswell survey.

Project Description and Results. The S-wave particle-motion data at the M-Site will be used to identify and characterize the fast and slow waves in a crosswell data set. If the shear wave is not split in the rock mass, the particle motion at the receiver during the S-wave arrival will show a single linear direction of polarization corresponding to the direction of the source. On the other hand, if splitting occurs between the source and receiver, the arrival of the fast S-wave will cause a linear particle motion related to the fracture direction which will degrade when the slower S2 wave arrives. At that point, a coordinate transformation will occur that will separate the shear wave into its two orthogonal components (Alford 1986); one axis will contain S2 wave energy while the other will only contain Sl energy.

The periods of linear motion corresponding to the S1 arrival can be identified using either particle motion diagrams (hodograms) or rectilinearity plots shown in Figures 5 and 6. Hodograms represent a projection of the 3-D receiver data onto a 2-D plane yielding a (nearly) straight line during periods of linear particle motion. The more complex rectilinearity method constructs a 3-D covariance matrix over a given time window and uses the eigenvalue solution of the matrix to test for linear motion (Jurkevics 1988). This is equivalent to finding the principle axes (i.e., eigenvectors) of a body consisting of point masses representing the 3-D displacement values for a small time increment of the data. If the particle motion is linear for that time window the constructed body is "slender" and the matrix has a single, large eigenvalue. Rectilinearity itself is a measure of the relative magnitudes of the eigenvalues and approaches unity when the motion is linear and a single eigenvalue dominates. Both the hodogram and rectilinearity methods have been previously used to observe the transition from linear to non-linear particle motion which occurs during Sl and S2 arrivals as well as determining the polarization angle of that motion (Zhang & Schwartz 1994). However, because rectilinearity offers a 3-D view of the linear motion and lends itself to automated processing schemes, it has more promise in identifying the axes which contains purely S1 or S2 motion for our large data set.

Ongoing work entails the use of rectilinearity analysis to identify the existence and arrivals of S1 and S2 waves from the crosswell data set that were collected as part of the hydraulic fracturing work at the M-Site. Attention is directed at determining which ray paths exhibit splitting and how the time lag and polarization angles of the split waves relate to the fracture/ray path geometry. To this end, a routine was constructed to locate the periods of high rectilinearity and characterize them by their

Three Component Seismic Data

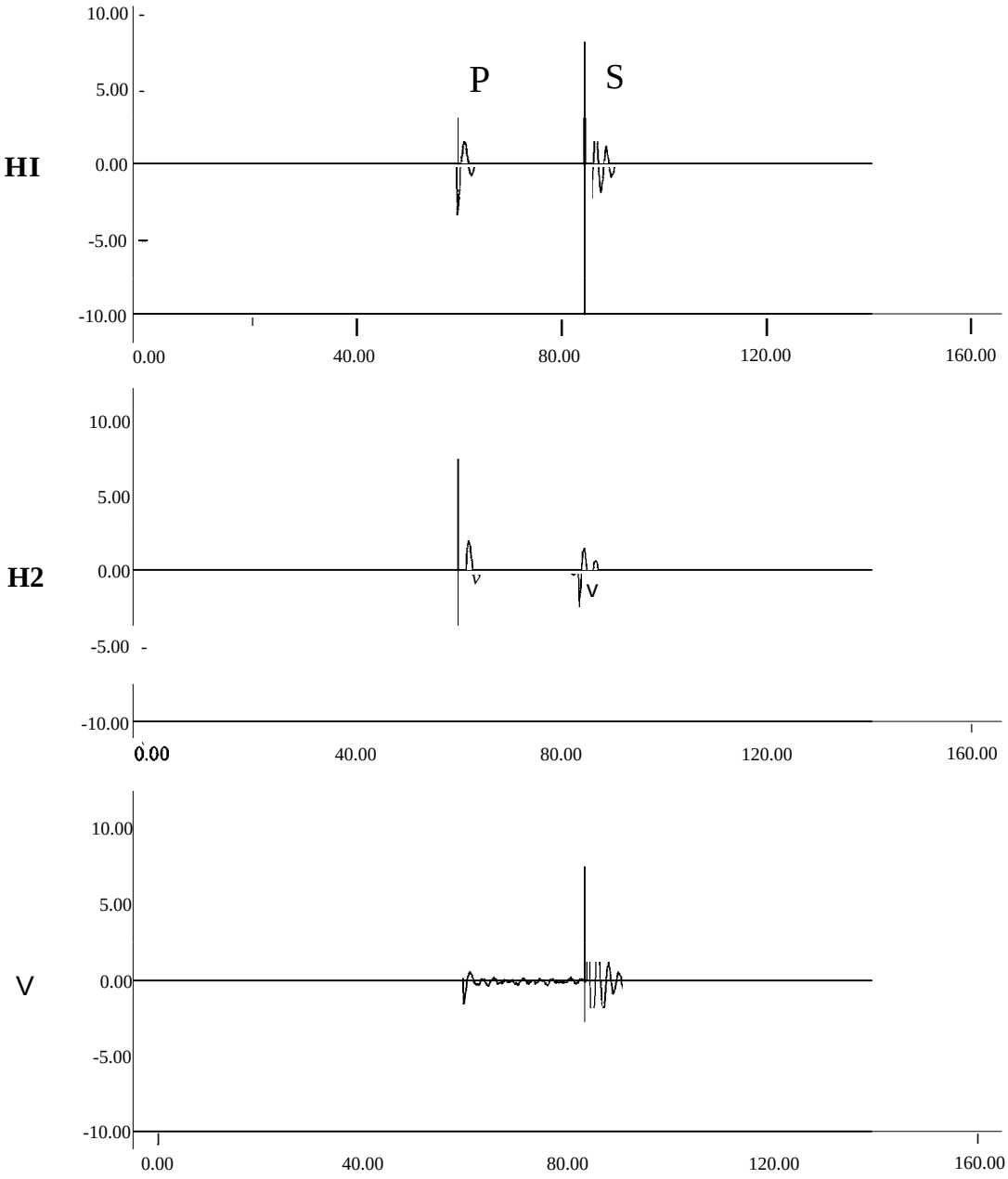

Figure 5. Sample of seismic data containing P and S waves.

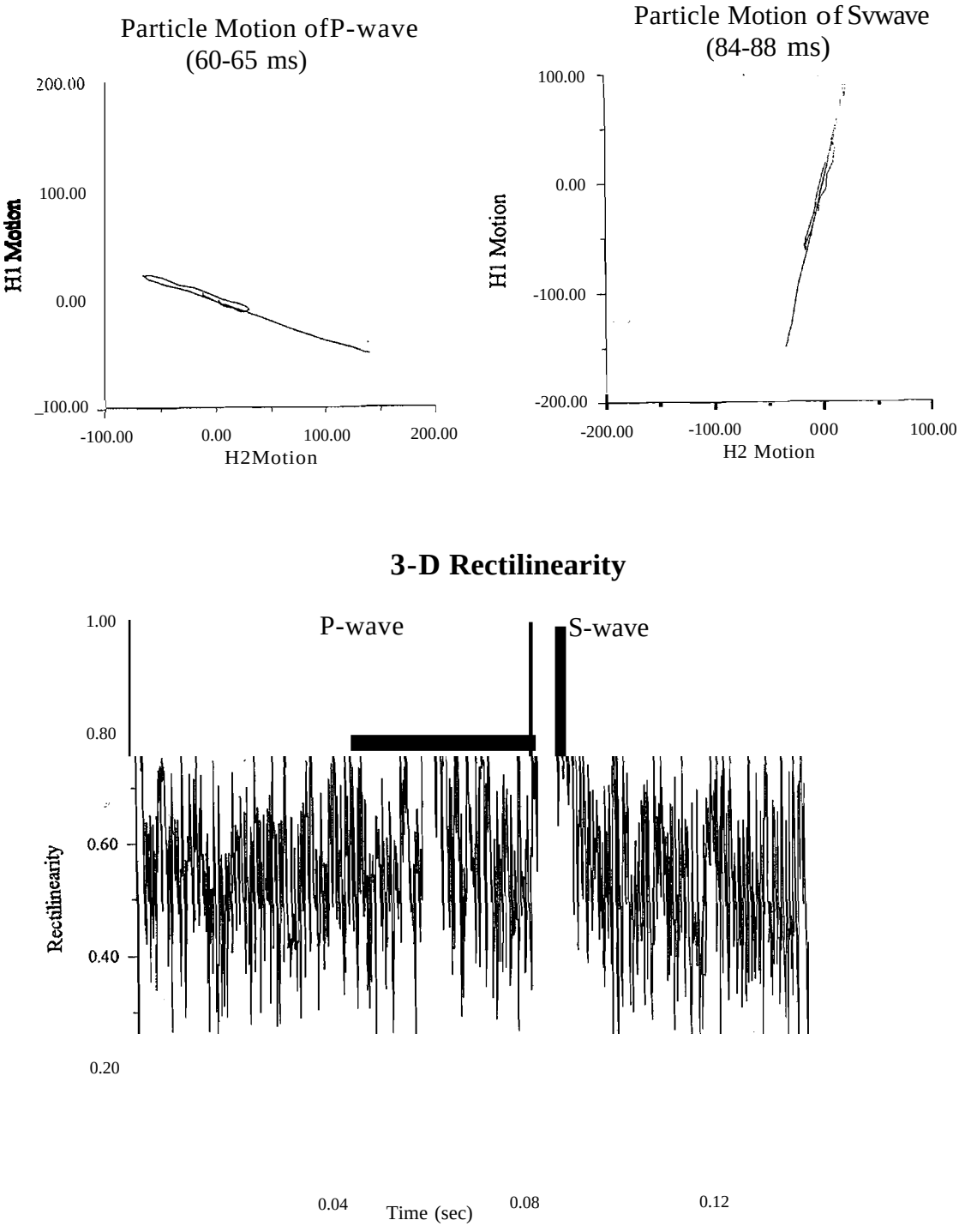

Figure 6. Linear particle motion of sample data using hodograms and rectilinearity.

respective linear particle motions. Preliminary results indicate that this data set does not show consistent shear wave polarizations parallel and perpendicular to the (known) fracture system. There is also evidence to suggest that the identification of the S2 wave will be difficult for crosswell data for which the distance between the source and receiver is small (Liu et al, 1991). If a relationship between the splitting parameters and the fracture system can be established, a means of back-projecting the data may be selected and implemented.

Parallel to the shear wave analysis, some background work is being performed. The rectilinearity method is being used to determine the unknown alignment of the horizontal receivers (HI & H2) for each geophone location. This is accomplished by determining the P-wave azimuthal polarization for each geophone and relating the known source/receiver geometry to the polarization angle. A 2-D horizontal coordinate transformation can transform all of the data to a single, consistent N-E (and vertical) coordinate system. Additionally, some filtering issues are being investigated using the raw data and MicroMax® software. The correct filtering and the geophone orientations are both crucial to any extended shear wave interpretation.

Lastly, and separate from the birefringence issue, an automated routine for picking S-wave arrivals is being tested in the interests of constructed an S-wave tomogram of the data. This method uses a combination of the rectilinearity analysis, the P-wave arrival information, and a wave front selection algorithm. First-break shear wave data will aid in the overall M-Site effort to locate micro seismic events. They may also prove to be useful in the construction of a P-to-S velocity model.

Fracture Network Analysis and Reservoir Modeling

Background. The state of the art in simulation of fluid flow in fractured reservoirs relies on the application of dual porosity numerical models. These models contain two separate (possibly anisotropic) overlapping porous media, one for a permeable matrix and one for fractures in an impermeable medium. The flow of fluid in both media is coupled so that fluid can move from one to the other. The properties of each of the two components can vary from grid block to grid block as is typical in a finite element analysis. The fractured medium is equivalent to an anisotropic medium. Its permeability is defined as if it contained three mutually orthogonal regular sets of infinitely long parallel-plate fractures with a constant spacing and aperture.

There are several problems with this approach. First, natural fracture systems do not consist of three mutually orthogonal sets of smooth parallel planes. Therefore, some method is needed to describe the geometries of real fracture networks in such a way that the associated data provide useful input into the framework of conventional or improved reservoir models. Two particularly complicated issues in this process involve the consideration of scaling and spatial heterogeneity. Hence, an understanding is needed of the scale at which fracture geometries must be observed and how the relevant input data for modeling are extrapolated for a specific grid block.

Another major issue arises because the mechanical and transport properties of fractures are stress sensitive, much more so than the rock matrix, which renders the fluid transport behavior of the entire reservoir stress sensitive as well. At this time, much is known about the deformation of single fractures and how this affects the permeability (Brown, 1987). However, no proven

method has yet been developed by which the effective elastic compliance and stress-dependent permeability for a grid-block-sized piece of a fracture system can be calculated.

Project Description and Results. To solve the analysis of fracture networks, at least the following are needed: (1) development of methods for the quantitative analysis of fracture pattern, maps, and images, (2) use of data derived from this analysis to study scaling relations and the spatial heterogenity within fracture systems, and (3) establishment of methods to derive permeability tensors and the associated elasticity tensors for gridblocks from fracture patterns and other pertinent data.

Ongoing work under this project focuses on the problem of defining approximate fracture permeability and elasticity tensors for each grid block in a fractured reservoir from maps (including photographs) of natural fractures that were created during surveys of outcrops in the Green River basin. As a practical first step, a statistical model of randomly or systematically distributed cracks due by Oda (1982, 1984, 1985, 1986) is being implemented. The model relates elastic compliance and permeability tensors to the crack geometry through "fabric" tensors that are volume averages of the contribution from each crack in the population. The volume average contains functions of the crack orientation, length, and aperture, so that long cracks or wide cracks contribute relatively more than their smaller cousins. Elasticity is in this model is implicitly coupled to fluid flow through an assumed relationship between crack aperture and normal stress across the crack.

ada's model and its current implementation are practical at the expense of rigor because there are many simplifying assumptions which reduce the generality of the results. However, the model is easy to apply and probably retains the essential features of real natural fracture populations to be a significant improvement over assuming that cracks reside in three infinitely long orthogonal sets. The latter concept constitutes the core of the existing dual porosity reservoir simulators. It is also significant that the permeability tensors derived from ada's model can easily be translated into the proper inputs for the available dual porosity models.

At this point, considerable work has been done in an attempt to develop a method to digitize fracture location, length, and orientation automatically from scanned digital images. This problem has proved to be difficult due to a combination of the poor contrast between fractures and the background, and the presence of many other objects such as trees with similar gray-scale intensity as the fractures themselves. However, success was achieved in enhancing linear features in digital photographic images with spatial filters, ultimately making the work of digitizing by hand somewhat easier. Several digitized outcrop fracture maps have been used to calculate permeability tensors. Figures 7 to 9 illustrate one such sequence from scanned photograph, to digitized fracture pattern, to the 2-D permeability tensor. Additionally, work is in progress to include a realistic model of crack closure under normal stress in the model, allowing the evaluation of changes in the permeability tensor under changes in stress state.

Core-Based In Situ Stress Measurements at the M-Site

Background. Total and effective stress measurements provide the boundary conditions for reservoir simulations during the exploration and production phases. Although hydraulic fracturing is accepted as the standard for determining orientation and magnitude of the minimum horizontal stress, it is expensive, leading to relatively infrequent use and widely spaced data

Figure 7. Photograph of fractures within a marine sandstone unit of Frontier formation east of Kemmerer, Wyoming (Lorenz and Laubach,1994). The area shown is approximately 1000x2000 ft.

Figure 8. Digitized map of fractures in Figure 7. Fractures are approximated as straight lines. The aperture is assumed to be proportional to the fracture length.

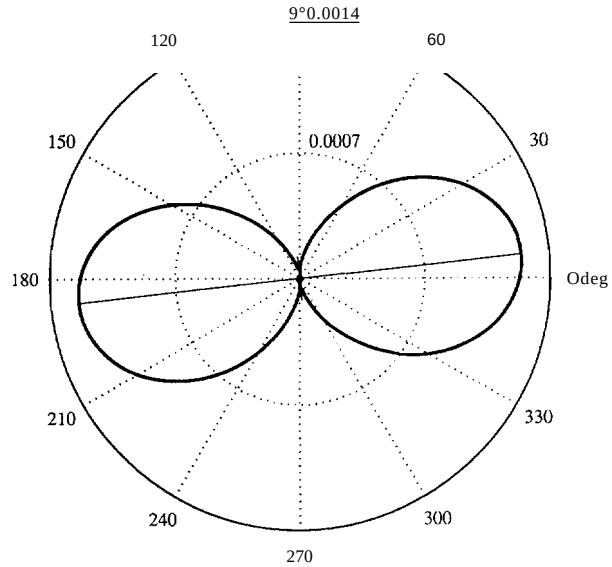

Figure 9. Permeability tensor (permeability as function of orientation) for fractures shown in Figure 8. The ratio of maximum to minimum permeabilities is 23; the principal permeability is aligned with the orientation of the longest fractures.

points. An alternative approach is based on measurements on oriented core. These "core-based" methods include Anelastic Strain Recovery (ASR), Differential Strain Curve Analysis (DSCA), Kaiser Effect, compressional and shear wave velocity measurements, and shear wave birefringence. The most established of these methods is the determination of the orientation of the velocity anisotropy. DSCA is also employed to evaluate the ratio of the principal in situ stresses. ASR provides answers quickly but must be applied on fresh core in the field. In some cases, ASR has also been used to estimate stress magnitudes as well as determine stress orientation. The Kaiser effect technique offers possibilities for determining stress orientations and magnitudes without knowledge of any physical rock properties.

Except for the Kaiser effect, core-based methods depend on the assumption that relaxation cracks form when the core is cut free and locked-in residual stresses are released. Driven by the largest locked-in stresses, more relaxation cracks open in the direction of the maximum in situ compressive stress. Rock properties that depend on crack density and degree of opening can detect the anisotropic orientation of the relaxation cracks, and this indicates the orientation of the in situ stress.

The Kaiser effect is based on the observation that many materials emit high frequency bursts of sound when loaded. The bursts of sound, called acoustic emissions or AE, are due to grain-scale failures, such as pore collapse or grain cracking. Typically, AE increase in number as the load on a sample is increased, drop sharply during unloading, and remain low until the previous peak stress is surpassed. An abrupt increase in AE rate at that stress is a marker of the previous peak stress.

Project Description and Results. Extensive knowledge concerning the in situ stress state at the M-Site motivated a comparison of all six methods above. Oriented sandstone core from 4314 and 4567 ft in Monitor Well #1 was used. First, attempts were made to measure ASR and monitor AE from fresh core. Subsequently, ultrasonic velocity, DSCA strain, and AE data were gathered at atmospheric conditions, in hydrostatic compression, and in uniaxial, triaxial, and extensile deviatoric loading experiments. Triaxial tests demonstrated significant nonlinearity and a nearly 300% increase in tangent (elastic) modulus at stresses up to 100 MPa, consistent with compaction and crack closure.

Compression and shear wave velocities were measured as a function of azimuth on core from both depths. The results are shown in Figures 10 and 11, which are polar plots with the minimum velocity subtracted off to emphasize the angular velocity variations. The observed velocity anisotropies are 3-10 % and indicate minimum in situ principal stress directions of N28E for core from 4314 ft and N5W for core from 4567 ft. Shear wave data for horizontally and vertically polarized waves in the sample from 4567 ft indicate somewhat smaller anisotropies but the same minimum principal stress direction. (Figure 11.)

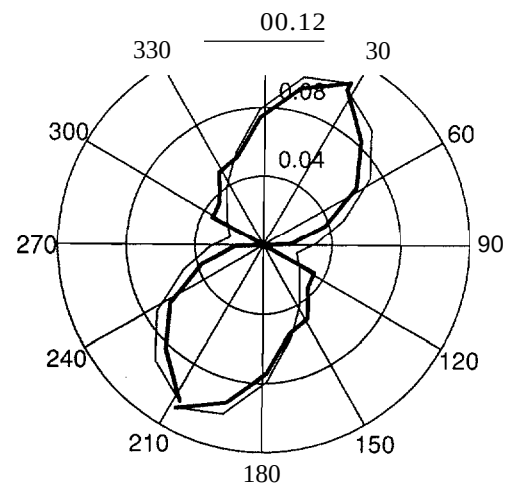

8(from true North)

Figure 10. Two independent measurements of compressional wave velocities on core from 4314 ft as a function of azimuth. Velocities were normalized to Vmin=4.08 km/s.

Shear wave birefringence was invoked earlier as a tool for detecting natural fractures in situ. Shear wave birefringence can also be related to the preferred orientation of relaxation microcracks in rock, and therefore, to in situ stress orientations (Yale and Sprunt, 1989). Figure 12 shows the amplitude of shear waves propagating along the axis of core from 4567 ft between transducers with crossed polarization. Normalized amplitudes are plotted as a function of the angle between the transmitter polarization and North as the core was rotated. The amplitude follows a

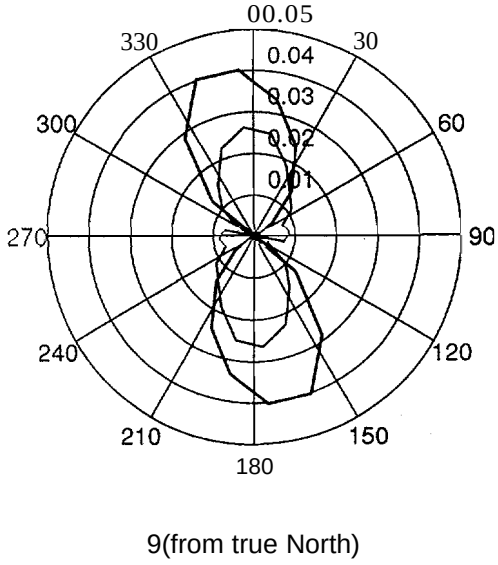

Figure 11. Shear wave velocities (SH and SV) as a function of azimuth on core from 4567 ft. Velocities were normalized to Vmin=2.51 and *2.23 km/s*.

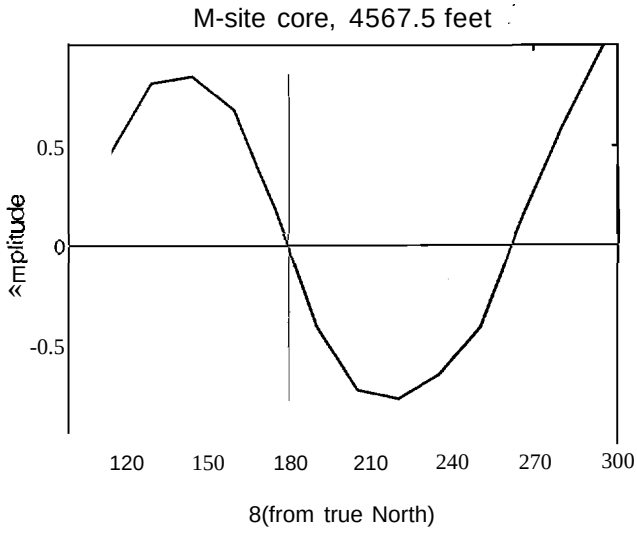

Figure 12. Signal amplitude for cross-polarization shear transducers, propagating a shear wave parallel to core axis (vertical). Note polarity change at 180 and 270 degrees.

cos28 distribution with a change in sign (phase reversal) when the fast and slow directions, corresponding to the directions of maximum and minimum stresses, are rotated into and back out of alignment with the transducer polarizations.

Strain measurements (DSCA) showed that the principal strain axes were closely aligned with the in situ stress directions inferred from velocity and previous measurements (Warpinski and Teufel, 1989). No evidence was found for an increase in stiffness correlated to the magnitude of the in situ stress.

Kaiser effect measurements relied on uniaxial, conventional triaxial, and extensile compression tests on plugs cored at various orientations to the full core as it was received. AE interpretations were made based on both uniaxial loading measurements and on extensional loading (Holcomb, 1993). The underlying idea of the latter is that uniaxial testing for determining in situ stress is flawed because of the rotational invariance of the stress, resulting in the possible growth of cracks of many different orientations. Therefore, the onset of AE, produced by crack growth, is not uniquely linked to the orientation of the uniaxial stress. Figure 13 is a plot of threshold stress at the onset of AE in triaxial extension tests with a maximum at about 30°. According to Holcomb (1993), this direction should coincide with the direction of the minimum principal horizontal stress.

Surprisingly, no ASR or AE signals were obtained on fresh core. This means that time-dependent strains were small to zero, and only a few AE events were detected. Apparently, the relaxation either did not occur or was completed before instrumentation was installed. Based on past experience at the M-Site, it is unlikely that the strain relaxation was completed before the instrumentation was installed, approximately 6 hours after the core was cut. In light of the

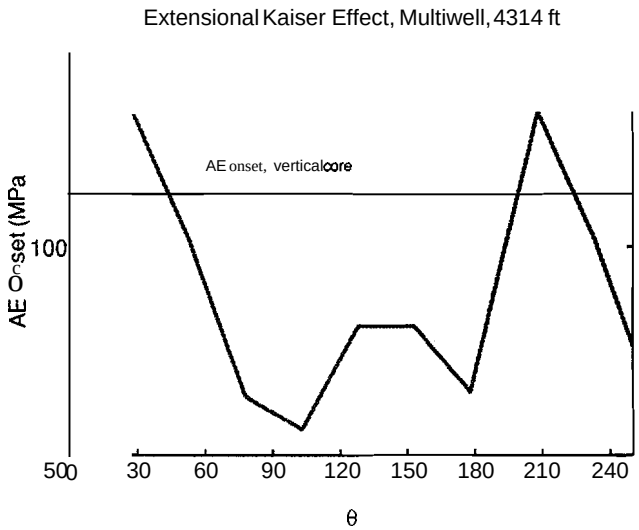

Figure 13. AE onset for extensional tests.

velocity and strain results mentioned earlier, however, it is conceivable that relaxation cracks were already formed in situ. They might have developed when pore pressure increased during the maturation phase or during the tectonic evolution of the reservoir.

FUTURE WORK

Future Work in FY'95-96 will focus on basin fracture characterizations, the advancement of fracture network modeling, and the documentation of the results obtained from core-based stress measurements at the M-Site. Laboratory geomechanics measurements will be resumed as project involvement in subsurface reservoir analyses demands.

ACKNOWLEDGEMENTS

The network analysis of fracture systems in this report was jointly funded by the Morgantown Energy Technology Center and the Bartlesville Project Office of the U. S. Department of Energy. The Gas Research Institute also funded a substantial portion of the evaluation of the core-based methods for in situ stress measurements.

REFERENCES

Alford, R. M., 1986. Shear data in the presence of azimuthal anisotropy: Expanded Abstracts, 56th Annual International SEG Meeting, 1986, Houston, pp. 476-479.

Brown, S. R., Fluid flow through rock joints: the effect of surface roughness, J. Geophys. Res.,92, 1337-1347, 1987.

Beydoun, W. B., C. H. Cheng, and M. N. Toksoz, Detection of open fractures with vertical seismic profiling, J. Geophys. Res., 90, 4557-4566, 1985.

Crampin, S, Suggestions for a consistent terminology for seismic anisotropy, Geophys. Prosp., 37, 753-770, 1989.

Holcomb, D. J., Observations of the Kaiser effect under multiaxial stress states: implications for its use in determining in situ stress, Geophys. Res. Lett., 20, pp. 2119-2122, 1993.

Holcomb, D. J., General theory of the Kaiser effect, Int. 1. Rock Mech. Min. Sci. & Geomech. Abs., 30, pp. 929-935, 1993.

Jurkevics, A., Polarization analysis of three-component array data, Bull. Seismol. Soc. Am, 78, 1725-1743, 1988.

Liu, E., S. Crampin, and D. B. Booth, Shear-wave splitting in cross-hole surveys: modeling, Geophysics, 54, 57-65, 1989.

Liu, E., S. Crampin.. and J. Queen, Fracture detection using crosshole surveys and reverse seismic profiles at the Conoco Borehole Test Facility, Oklahoma, Geophys. Journal Int., 107,449-463, 1991.

Lorenz, J. C., and S. E. Laubach, Description and interpretation of natural fracture patterns in sandstones of the Frontier Formation along the Hogsback, southwestern Wyoming: Gas Research Institute Topical Report, GRI *94/002089* p., 1994.

Lorenz, J. C., N. R. Warpinski, and L. W. Teufel, Rationale for finding and exploiting fractured reservoirs, based on the MWX/SHCT-Piceance basin experience: Sandia Report SAND93-1342, 147 p., 1993.

Oda, M., Fabric tensor for discontinuous geological materials, SoilsFdns., 22, 96-108, 1982.

Oda, M., K. Suzuki, and T. Maeshibu. Elastic compliance for rock-like materials with random cracks, Soils Fdns., 24, 27-40, 1984.

Oda, M., Permeability tensor for discontinuous rock masses, Geotechnique, 35, 483-495, 1985.

Oda, M., An equivalent continuum model for coupled stress and fluid flow analysis in jointed rock masses, Water Resour. Res., 22,1845-1856, 1986.

Warpinski, N. R., and L. W. Teufel, In-Situ Stresses in Low-Permeability, Nonmarine Rocks, J. Petro Tech., April, pp. 405-414, 1989.

Yale, D. P. and E. S. Sprunt, Prediction of Fracture Direction Using Shear Acoustic Anisotropy, The Log Analyst, March-April, pp. 65-70, 1989.

Zhang, Z. & S. Schwartz, Seismic anisotropy in the shallow crust of the Lorna Prieta segment of the San Andreas fault system, Journal of Geophysical Research, 99, 9651-9661.

Sponsors: Co-Hosted by Department of Energy (DOE)
Morgantown Energy Technology Center
Morgantown, West Virginia
and
Southern University and
Agricultural and Mechanical College
Baton Rouge, Louisiana