FE-2600-3
Dist. Category UC-92

STUDY TO DETERMINE THE TECHNICAL AND ECONOMIC FEASIBILITY OF RECLAIMING CHEMICALS USED IN MICELLAR POLYMER AND LOW TENSION SURFACTANT FLOODING

Progress Report for the Period
June 18 to July 15, 1977

Dr. Richard H. Stephens

ENERGY RESOURCES CO. INC.
Cambridge, Massachusetts 02138

NOTICE
This report was prepared as an account of work sponsored by the United States Government. Neither the United States nor the United States Energy Research and Development Administration, nor any of their employees, nor any of their contractors, subcontractors, or their employees, makes any warranty, express or implied, or assumes any legal liability or responsibility for the accuracy, completeness or usefulness of any information, apparatus, product or process disclosed, or represents that its use would not infringe privately owned rights.

July 1977

PREPARED FOR THE UNITED STATES
ENERGY RESEARCH AND DEVELOPMENT ADMINISTRATION

Under Contract No. EF-77-C-01-2600

DISTRIBUTION OF THIS DOCUMENT IS UNLIMITED

DISCLAIMER

This report was prepared as an account of work sponsored by an agency of the United States Government. Neither the United States Government nor any agency Thereof, nor any of their employees, makes any warranty, express or implied, or assumes any legal liability or responsibility for the accuracy, completeness, or usefulness of any information, apparatus, product, or process disclosed, or represents that its use would not infringe privately owned rights. Reference herein to any specific commercial product, process, or service by trade name, trademark, manufacturer, or otherwise does not necessarily constitute or imply its endorsement, recommendation, or favoring by the United States Government or any agency thereof. The views and opinions of authors expressed herein do not necessarily state or reflect those of the United States Government or any agency thereof.

DISCLAIMER

Portions of this document may be illegible in electronic image products. Images are produced from the best available original document.

"This report was prepared as an account of work sponsored by the United States Government. Neither the United States nor the United States ERDA, nor any of their employees, nor any of their contractors, subcontractors, or their employees, makes any warranty, express or implied, or assumes any legal liability or responsibility for the accuracy, completeness, or usefulness of any information, apparatus, product or process disclosed, or represents that its use would not infringe privately owned rights."

I. Program Objective

The objective of this program is to determine the need for and technical/economic feasibility of using Energy Resources' concepts for ultrafiltration and reverse osmosis for treating oil field fluids and for reclaiming chemicals. This will be accomplished through the following tasks:

1. A review and evaluation of the state-of-the-art of oil/water separation techniques and the economics of oil field emulsion separation,

2. A characterization of simulated emulsions that typify expected produced fluids from micellar-polymer floods,

3. An experimental program using ultrafiltration membranes to break the simulated emulsions and recover surfactant and water as permeate from the fluids,

4. An experimental program using reverse osmosis or ultrafiltration membranes to concentrate the surfactant in the ultrafiltration permeate and to produce a clean water stream, and

5. As part of the final report -- a conceptual design and cost estimate for an ultrafiltration/reverse osmosis unit for field use and an analysis of the impact of the technology on micellar-polymer flooding techniques.

II. Work This Period

Work performed in the past reporting period has been mainly in preparation for the experimental work to be performed in Tasks 2 (emulsion formulation and characterization), 3 (ultrafiltration of emulsions), and 4 (surfactant recovery by reverse osmosis).

a. Literature Search

Additional literature on surfactant and emulsion characterization and reverse osmosis and ultrafiltration membranes was obtained. Some further annotating of the literature was done, but this work was slowed in order to start long lead time work for Tasks 2, 3 and 4.

b. Experimental Program

Some additional time was spent expediting shipment of the oil and brine samples from the five selected ERDA demonstration projects. No samples have yet been received; continued delay in their arrival may delay the schedule for the program.

The ultrafiltration membrane testing equipment design was completed and the equipment components were ordered. A schematic of the testing apparatus is shown as Figure 1. The apparatus was designed to test the efficacy of different manufacturers' ultrafiltration membranes in separating surfactant-oil-water emulsions. The system can be operated at steady state or in a transient mode in which the oil-to-water ratio is changing.

The emulsion flows from a 30 gallon tank through the pump to the ultrafiltration membrane. A bypass loop around the pump and a diaphragm valve are used to control flow rate. Fluid can be recirculated around the pump or returned to the feed tank. Permeate from the membrane is sent to a holding tank (transient operation) or recycled to the feed tank (steady state operation). Concentrate from the membrane is recycled to the pump or to the feed tank.

Instrumentation on the system consists of a thermometer fitted into the feed tank, pressure gauges before and after the ultrafiltration membrane, a flow meter upstream of the membrane to monitor volumetric flow rate, and a rotameter for measuring permeate flow rate. Sample taps for permeate and concentrate have been provided. Instruments are bronze except for the permeate rotameter which is glass.

All flow lines except the permeate flow lines will be of 1 inch diameter, Schedule 80 PVC piping. Permeate flow lines will be made of Tygon® tubing. All valves and fittings will also be constructed of PVC. In the temperature and pressure range expected (<150°F, <60 psia) PVC is a suitable and inexpensive material for handling oil or brine.

The centrifugal pump is sized to deliver 20 gallons per minutes (GPM) at approximately 50 psig. A 3 horsepower motor is required to meet these specifications. The pump internals are bronze. A diaphragm valve and/or the pump bypass loop can be used to throttle back on the delivered flow and pressure. A centrifugal pump was chosen to avoid the stroking action of a piston pump which might damage some ultrafiltration membranes.

The feed material will be emulsified by using the shearing action of the pump and by circulating the oil-brine fluid through the pump and directly back to the feed tank. The

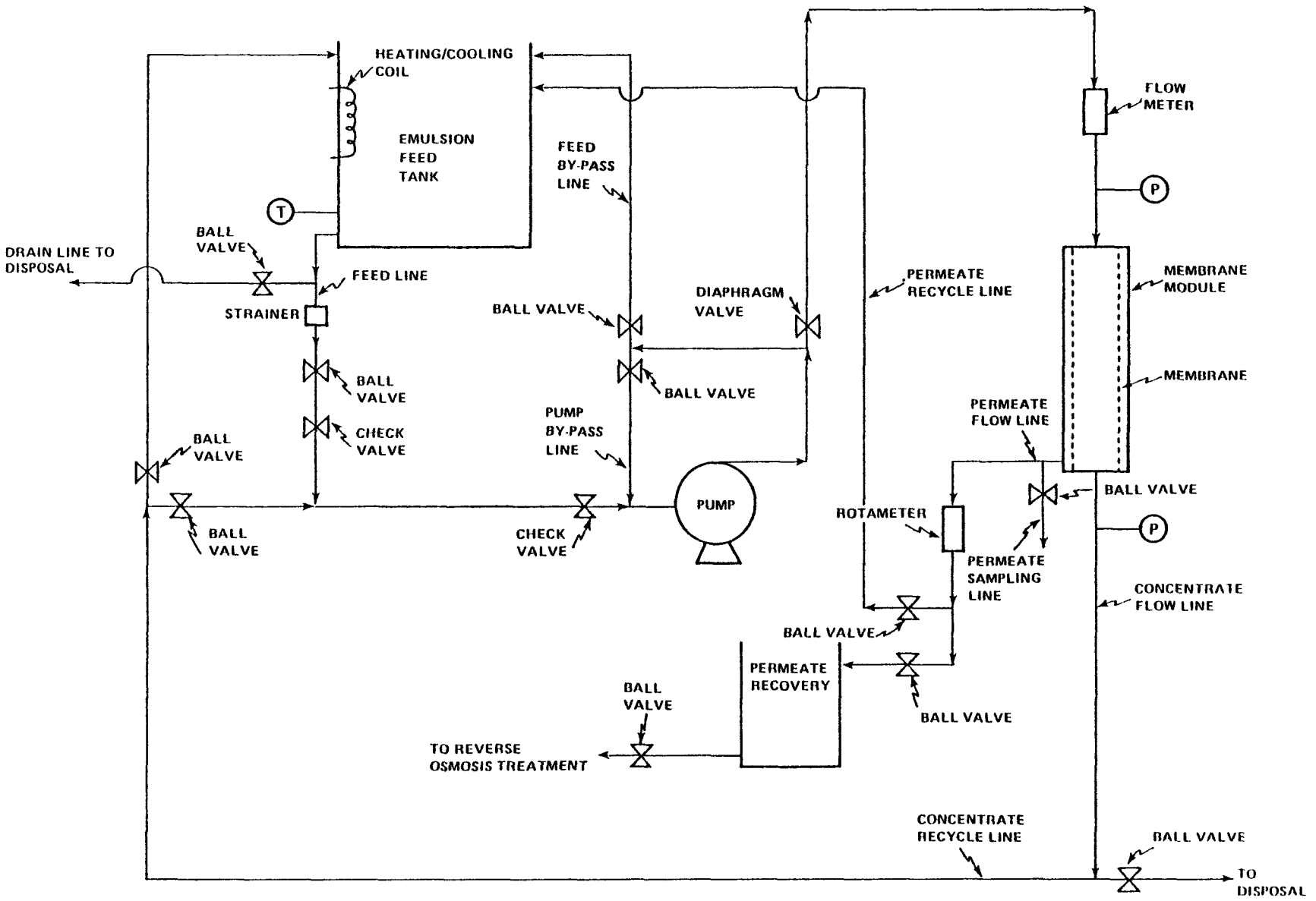

Figure 1. Ultrafiltration membrane testing system.

emulsion will be stored in a 30 gallon polypropylene tank fitted with a coil of copper tubing. The copper tubing can be connected to a steam generator or water line for heating or cooling of the emulsion, respectively.

The test program for Tasks 2, 3 and 4 was further delineated and is appended to this report. Data to be collected are described in the attached test plan.

III. Problems Encountered

A potential obstacle to surfactant recovery and concentration from the ultrafiltration (UF) permeate was identified. Most reverse osmosis (RO) membranes are designed to produce potable or clean water and to operate at a total dissolved solids (TDS) of 5000 ppm or less and a divalent cation concentration of less than 300 ppm. Higher dissolved solids levels tend to foul the membranes. The expected brine concentrations from produced oil field fluids are much higher, as shown in Table 1.

At the expected brine concentrations, the osmotic pressure of the UF permeate is several hundred psi. Therefore forcing "pure" water through the membrane and rejecting (retaining) salts requires a great deal of pumping power which is expensive. As the surfactant is concentrated, the osmotic pressure increases. Eventually, before much concentrating is done, the pumping costs become exhorbitant and/or the membrane is crushed.

What is needed is a membrane that has low or no rejection (passes as permeate) of the inorganic salts, but will still be "tight" enough to reject (retain) the surfactant molecules. These have a molecular weight range of about 250 to 600 with an average molecular weight of about 420. Conversations with membrane manufacturers and distributors have not yet identified a satisfactory membrane for surfactant recovery from the UF permeate. Membranes that have a low salt rejection are not tight enough to retain surfactants (and cosurfactants if present). Discussions with manufacturers are continuing. Until a suitable membrane for recovering surfactant is identified, the "reverse osmosis" equipment for surfactant recovery from the UF permeate will not be finalized.

One possibility for resolving this problem is to hydrolize or chemically change the currently available RO membranes to fit the requirements stated above. This alternative could be pursued if no currently manufactured membrane proves to be suitable.

TABLE 1

SALINITY AND DIVALENT CATIONS OF SELECTED CHEMICAL FLOODS

OPERATOR	Phillips	Cities Service	Penngrade	Gary Operating	Kewanee
FIELD	Burbank, Okla.	El Dorado, Kansas	Bradford, Pa.	Bell Creek, Mont.	Stanley Stringer, Okla.
FORMATION SALINITY, ppm TDS	70,000	90,000	100,000	2,000	70,000
DIVALENT CATIONS ppm	4,000	4,000	-	-	6,000

IV. Future Work

Work to be accomplished next period includes completing the annotated bibliography and preparation of a critique of oil/water separation techniques and the cost and viability of oil field emulsion breaking processes, including ultrafiltration. The concentrations of components to be incorporated into the synthetic emulsions will be determined. Once field samples have been received, the emulsions will be synthesized and tested. The ultrafiltration membranes for Task 3 testing will be selected.

TEST PLAN

Experiments and analysis considered sufficient to meet the technical objectives of the contract are listed below under Tasks 2, 3 and 4. Analytical procedures are also detailed.

Task 2 Emulsion Characterization

1. Collection of field data & samples.

Data will be compiled under the format shown in the attached Table 1. In addition, the following samples will be collected:

a. Oil produced in the field.

b. Produced brine.

c. Surfactants, cosurfactants, polymers, and other chemicals, if any.

Oil samples taken prior to chemical flooding are preferred to avoid surfactant precontamination of the oil for testing. Alternatively, the base level of the surfactant in the produced oil can be established by extracting the oil to exhaustion with water. Brine samples should be post preflush to accurately reflect the cation concentrations expected in the produced fluids. Alternatively sample salt concentrations can be adjusted to reflect post flushing conditions.

2. Formulation of emulsions.

For each of the four fields under micellar flooding,[a] three emulsions will be synthesized in the laboratory representing those that may be produced in the field at different points in time. These emulsions will be characterized as shown in Table 2 as to their stability, viscosity and composition.

---

[a]The handling of the polymer waterflood fluids in Task 2 is yet to be determined.

TABLE 1

FIELD DATA ON CHEMICAL FLOODS

PROJECT NAME	Phillips-Burbank	Citgo-El Dorado	Gary Operating-Bell Creek	Penn Grade-Bradford	Kewanee-Stanley Stringer
type of flood					
chemical injection date					
total area, acre					
pattern spacing					
depth, ft					
avg porosity					
avg permeability, md					
avg S_o, %					
temperature, °F					
oil viscosity, cp at 75°F					
oil gravity, °API at 75°F					
other oil characterization					
formation salinity, ppm, TDS					
divalent cations, ppm					
wettability					
preflush, slug PV					
preflush salinity, ppm					
monovalent cations as NA^+					
divalent cations as Ca^{++}					
micellar blend, slug PV					
surfactant, % in the slug					
surfactant					
tradename					
generic name					
molecular weight distribution					
oil fraction, if any					
cosurfactant, % in the slug					
tradename					
generic name					
polymer, slug PV					
polymer, ppm in the slug					
tradename					
generic name					
over distribution					

TABLE 2

CHARACTERIZATION OF EMULSIONS

Field Location: _____

Characterizing Parameter	EMULSION TIME ORIGIN		
	Early	Middle (Base)	Late
water/oil ratio (vol/vol)			
surfactant in aq. phase, ppm			
surfactant in oil phase, ppm			
surfactant/cosurfactant ratio, overall (wt/wt)			
polymer content, overall, ppm			
salinity, ppm TDS			
divalent cations, as Ca^{++}, ppm			
interfacial tension, dyn/cm			
specific gravity at 75°F			
viscosity, cp at 75°F			
stability: conc. of added Ca^{++} at separation, ppm			

3. Development of partitioning functions.

Data on the partitioning of surfactant between the oil and the water phase will be obtained in the following manner.

The partitioning coefficient will be determined after vigorous mixing with a hand-operated homogenizer. Subsequently, the sample will be centrifuged until satisfactory phase separation has occurred and will then be allowed to stand overnight. A sample of the aqueous phase will be drawn off and the surfactant content determined by the standard methylene blue colorimetric method. Since there are no established techniques for directly determining the surfactant content of the oil phase, this will be computed by material balance from the known amount of surfactant added. The partition coefficient is then calculated and expressed as (conc/conc).

The partitioning function (the dependence on system parameters) will be determined in the following manner. We define the synthesized fluid corresponding to the mid-life produced fluid as the "base" fluid. This will be characterized by a certain overall water-to-oil-ratio (WOR), overall surfactant-to-cosurfactant-ratio (SCR), overall surfactant (plus cosurfactant) concentration (C_s), and electrolyte concentration (C_e) and will by convention correspond to a temperature (T) of 75°F. The dependence of partitioning coefficient (PC), and in some cases of the interfacial tension (IFT), on the various system parameters will result from measuring partitioning coefficients for different sets of parameters according to the following procedure.

a) For WOR, SCR, C_e and T at the base fluid values, C_s is varied over the values 1%, 10%, 100% and 500% of the base fluid C_s.

b) For WOR, C_s and C_e and T at the base fluid values, SCR is varied over the values 0.33X, 1.00X and 3.00X of the base fluid SCR.

c) For WOR, SCR, C_s and T at the base fluid values, C_e is varied over the values 20%, 100% and 500% of the base fluid C_e.

d) For SCR, C_s, C_e and T at the base fluid values, WOR is varied over the values 20%, 100% and 500% of the base fluid WOR.

e) For WOR, SCR, C_s and C_e at the base fluid values, T is varied over the values 75, 95 and 115°F. (The effect of this variable or partitioning coefficient is considered a low priority study and will therefore be pursued for only a single fluid.)

These parameter values are target figures, and experience with the various emulsion systems may dictate that other values be used.

Task 3 Ultrafiltration

1. Selection of emulsions for Task 3 testing.

From the emulsion synthesized in Task 2, five (probably the base fluid from each of the five selected fields) will be selected for Task 3 testing. Among the criteria for selection are the following:

a) Adequate representation of the variations in the emulsion composition, including variations in type of oil, composition of aqueous phase and (production) time variation in concentrations of surfactant, cosurfactant and water-oil ratio.

b) Stability and separability of emulsions. From bench scale experiments those emulsions that present significant difficulty in separation will be given testing priority.

2. Membrane Testing

a) The influence of the ultrafiltration system operating parameters will be determined in the following manner. The membrane system will be run in the steady state mode, recycling both concentrate and permeate to the feed rank, and remixing. Unless otherwise specified below the "base" operating parameters will be the typical values:

ΔP_m = 23 psi

= pressure drop across the membrane

L = 20 gal/min

= liquid flow rate through a typical 1" i.d. tubular membrane. This is translatable into a superficial velocity for other membrane configurations.

T = 95°F

Each of the five selected emulsion systems will be evaluated with each of four commercially available ultrafiltration membranes at the base operating values unless recommmended operating conditions for a membrane do not include the base values.

For each emulsion system the membrane which gives optimum performance will be identified. Optimum performance will be defined as that corresponding to the maximum sustained permeation rate with <1% by volume permeation of oil. Requiring sustained permeation will eliminate those membranes which tend to foul readily.

b) The optimum membrane corresponding to each of the five emulsion systems will then be evaluated with the corresponding early-life and late-life fluids (10 runs).

c) The effects of long-term operation will be determined by testing the base-fluid with its corresponding optimum membrane at steady state at the base operating parameters. Runs will be of 24-48 hour duration, with samples taken and performance determined periodically throughout.

d) For the five base emulsions systems and corresponding optimum membranes, the operating parameters will be varied individually (with the others held at the base conditions) as shown below:

ΔP_m = 10, 25 and 40 psi

L = 5, 10, 20 gpm

T = 75, 95, 115°F

e) In order to determine the effect of WOR and surfactant content, the ultrafiltration system will be operated in the transient mode with recycle of condensate to the feed tank, but external collection of permeate. The base fluids with their corresponding optimum membranes will be studied at the base operating parameters. Runs will progress for at least 6 hours, unless the feed becomes too viscous to pump, or the emulsion breaks or begins to permeate the membrane.

The following data are to be recorded as indications of the performance of the ultrafiltration system.

1) Feed material quality (emulsion external phase, evidence of microemulsion, broken emulsion)

2) Permeation rate

3) Permeate oil content

4) Permeate surfactant concentration.

Typical presentation of data is as shown in Figure 1. The results of the Task 3 study will allow preliminary design parameters for a demonstration scale system to be identified.

Task 4

1. Hyperfiltration

a) The aqueous permeates will be collected from the five emulsion/ultrafiltration membrane pair transient tests. Each of the five permeate samples will constitute the feed for the second stage processing, and will be evaluated with each of three reverse osmosis or "tight" ultrafiltration membranes. These tests will be performed in the transient mode, with recycle of concentrate and external collection of permeate.

b) The optimum membrane corresponding to each of the feed permeates will be identified. Optimum performance in this case is less readily defined, but will be related to maximum permeation rate per unit pressure drop across the membrane, with the requirement that most electrolyte be permeated, but most surfactant be retained.

c) The influence of the system operating parameters will be determined in much the manner followed for the ultrafiltration system, discussed above. Actual base operating conditions cannot yet be defined until membrane type (reverse osmosis of "tight" ultrafiltration) and membrane configuration (spiral wound, hollow fiber, tubular) are specified.

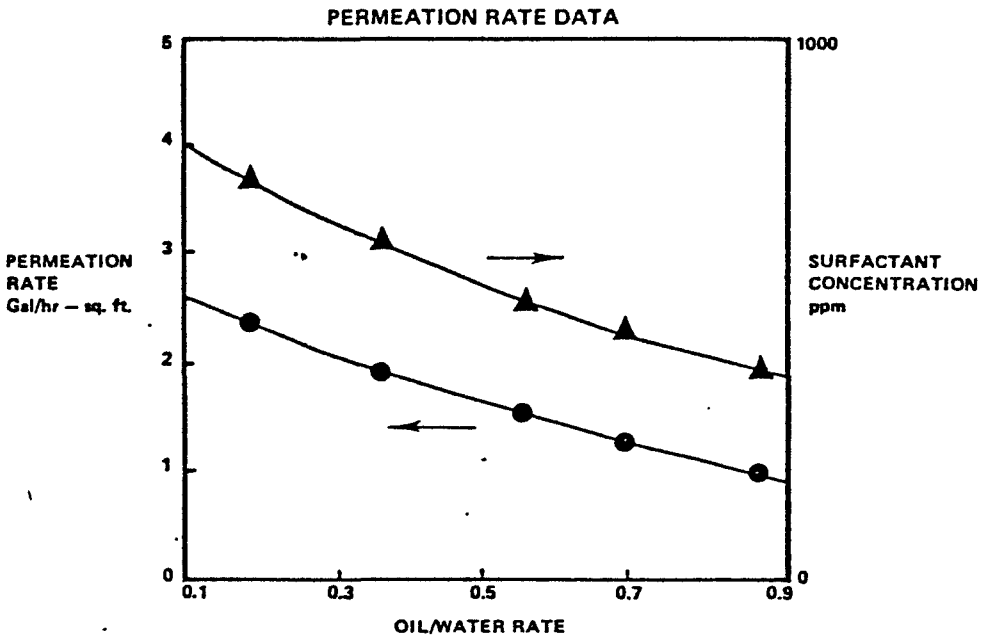
PERMEATION RATE DATA
PERMEATION RATE Gal/hr – sq. ft.
SURFACTANT CONCENTRATION ppm
OIL/WATER RATE
0
1
2
3
4
5
1000
0
0.1
0.3
0.5
0.7
0.9

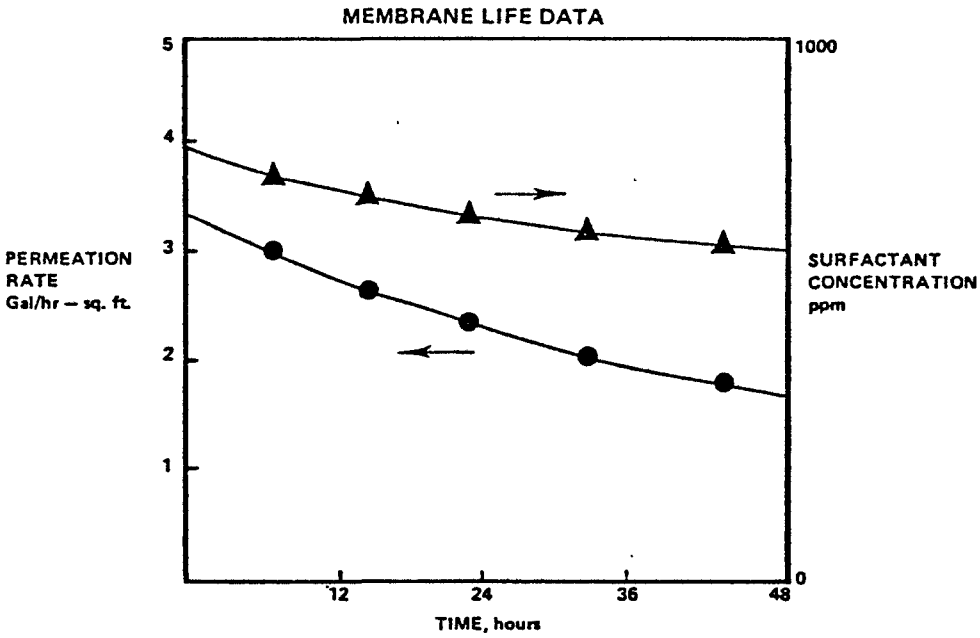
MEMBRANE LIFE DATA
PERMEATION RATE Gal/hr – sq. ft.
SURFACTANT CONCENTRATION ppm
TIME, hours
1
2
3
4
5
1000
0
12
24
36
48

FIGURE 1

d) The effects of long-term operation will be determined in a manner analogous to that for the ultrafiltration system.

Data of interest as an indication of system performance are:

1) Feed material colloidal properties (is surfactant concentration in excess of the critical micelle concentration, so that surfactant molecules exist primarily in the micellar form?)

2) Permeation rate

3) Permeate electrolyte content

4) Permeate surfactant content

5) Evaluation of reclaimed surfactant

To the extent possible the reclaimed surfactant will be compared in its colloidal and surface chemical behavior with the virgin material. Sensitive indicators of this behavior are the brine/air surface tension (σ) and the oil/brine interfacial tension (IFT) as a function of surfactant (plus cosurfactant) content. Viscosity of various mixtures of brine/surfactant plus cosurfactant/oil is another possible indicator. Determination of surfactant molecular weight distribution is a problem requiring considerable development of analytical methodology, and is thus felt to be beyond the scope of this study.

ANALYTICAL PROCEDURES

1. Analysis of Surfactants

The analysis of anionic surfactant concentration is performed following the method prescribed by the University of Florida, Chemical Engineering Department, in their first Semi-Annual Report Section D4, pages D-11 through D-18.

This procedure is based on spectrophotometric measurement of methylene blue-anionic surfactant complexes extracted into chloroform. The technique appears to yield reasonably accurate results and is relatively simple and rapid, while at the same time overcoming potential problems associated with surfactant structure, salt concentration and composition, and the presence of crude oil.

Calibration curves for sodium do-decylbenzene sulfonate and Witco TRS-10 surfactants are shown in Figure 2.

2. Interfacial tension will be measured by the spinning drop technique. For simple measurements where higher accuracy is not necessary, the deNuoy platinum ring tensiometer will be used.

3. Oil content of an emulsion will be determined by separating the emulsion in a high speed centrifuge after salting out. Where this is not possible (e.g., in the presence of a micro-emulsion), total oil content can be determined via infrared spectrophotometry.

4. Emulsion stability will be measured in terms of the amount of Ca^{++} ion per emulsion volume required to produce instantaneous phase separation under gravity.

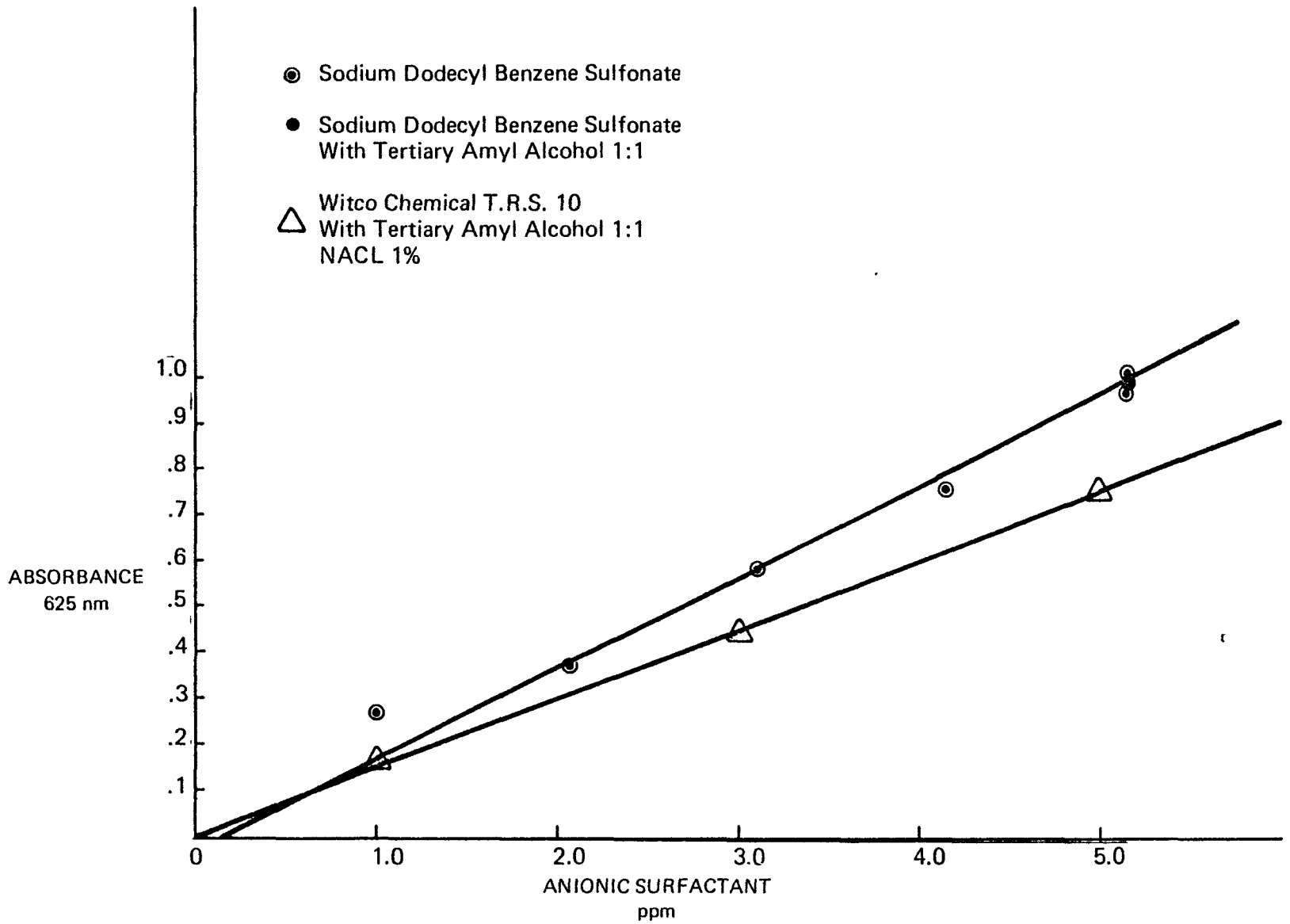

FIGURE 2

ANALYSIS OF SURFACTANTS