TITLE PAGE:

Feasibility Study for a Petroleum Refinery for The Jicarilla Apache Tribe.

Report Title and Type:

FINAL PROJECT TECHNICAL
NARRATIVE REPORT

Report Period:

SEPTEMBER 30, 2002 through OCTOBER 29, 2004

Author:

John D. Jones, P.E.

Date Issued:

OCTOBER 2004

D.O.E. AWARD NO. DE-FG26-02NT15454

Prepared By:

JOHN D. JONES ENGINEERING, INC.
2728 E. THOMAS ROAD
SUITE 100
PHOENIX, ARIZONA 85016
Phone (602) 957-7343
Fax (602) 955-5669

DISCLAIMER

This report was prepared as an account of work sponsored by an agency of the United States Government. Neither the United States Government nor any agency thereof, nor any of their employees, makes any warranty, express or implied, or assumes any legal liability or responsibility for the accuracy, completeness, or usefulness of any information, apparatus, product, or process disclosed, or represents that its use would not infringe privately owned rights. Reference herein to any specific commercial product, process, or service by trade name, trademark, manufacturer, or otherwise does not necessarily constitute or imply its endorsement, recommendation, or favoring by the United States Government or any agency thereof. The views and opinions of authors expressed herein do not necessarily state or reflect those of the United States Government or any agency thereof.

Abstract

A feasibility study for a proposed petroleum refinery for the Jicarilla Apache Indian Reservation was performed. The available crude oil production was identified and characterized. There is 6,000 barrels per day of crude oil production available for processing in the proposed refinery. The proposed refinery will utilize a lower temperature, smaller crude fractionation unit. It will have a Naphtha Hydrodesulfurizer and Reformer to produce high octane gasoline. The surplus hydrogen from the reformer will be used in a specialized hydrocracker to convert the heavier crude oil fractions to ultra low sulfur gasoline and diesel fuel products. The proposed refinery will produce gasoline, jet fuel, diesel fuel, and a minimal amount of lube oil. The refinery will require about $86,700,000 to construct. It will have net annual pre-tax profit of about $17,000,000. The estimated return on investment is 20%. The feasibility is positive subject to confirmation of long term crude supply. The study also identified procedures for evaluating processing options as a means for American Indian Tribes and Native American Corporations to maximize the value of their crude oil production.

Table of Contents

Section	Contents
1.0	Introduction
2.0	Executive Summary
3.0	Experimental
4.0	Results and Discussion
4.1	Survey and Characterization of Crude Oils
4.2	Process Design and Preliminary Engineering
4.3	Economic Analysis of a Proposed Refinery
5.0	Conclusion
6.0	References

Feasibility Study for a Petroleum Refinery for The Jicarilla Apache Tribe.

1.0 Introduction

1.1 Introduction to Study

This project is a feasibility study for a new petroleum refinery for the Jicarilla Apache Indian Reservation. This study was funded by a Department of Energy grant to evaluate oil processing as a means to increase the value of crude oil produced on tribal lands.

This study was performed by the Jicarilla Apache Energy Corporation and John D. Jones Engineering. The study was initiated on September 30, 2002 and has been completed on October 29, 2004.

1.2 Objectives

The objective of this project is to complete a feasibility study to install a crude oil refinery on lands of the Jicarilla Apache Tribe in Dulce, New Mexico. The objective of the study will be to propose an innovative design for a refinery process scheme to maximize the profitability while using a limited feed stock supply. The objective is to obtain a feasible design using a combination of innovation and integration. Traditional and non-traditional processing units will be used. Utilities will be integrated for maximum efficiency. Downstream process units will be carefully chosen based on necessity and practicality. Alternatives to downstream processing such as purchasing blend stock components will also be explored. The design will consider the production of specialty products and niche products. The installation of power generation equipment to convert lower value products to electricity is another alternative to increase profitability. The establishment of an infrastructure of utilities and site development will allow the Tribe to participate in complimentary projects including community and industrial developments.

The objectives of the phases of this project include characterizing the crude supply, developing the flow sheet, developing the product slate, determine the capital and operating costs for the project, determining the value of the products and development, and preparing an economic analysis.

1.3 Deliverables

- Survey and Characterization of Crude Oils of the Jicarilla Apache Tribe.
- Preliminary Engineering for a Petroleum Refinery for the Jicarilla Apache Tribe (to be presented to the Tribe only).
- Summary Report of the Preliminary Engineering for a Petroleum Refinery for the Jicarilla Apache Tribe.

- Economic Analysis of a Proposed Petroleum Refinery for the Jicarilla Apache Tribe (to be presented to the Tribe only).
- Summary Report of the Economic Benefit of a Proposed Petroleum Refinery for the Jicarilla Apache Tribe.
- Summary Report of Innovative Design Techniques and Complimentary Development Projects to Increase the Viability of Oil Processing Facilities on Native American Tribal and Alaskan Native Corporation Lands.

1.4 Summary of Report

The written deliverables have been incorporated into the results and discussion section of this report as the following sections:

4.1 Survey and Characterization of Crude Oils in the vicinity of the Jicarilla Apache Reservation.

4.2 Preliminary Engineering for a Petroleum Refinery for the Jicarilla Apache Tribe.

4.3 Economic Analysis of a Proposed Petroleum Refinery for the Jicarilla Apache Tribe.

Additionally a Microsoft Powerpoint presentation has been prepared which summarizes the analytical, process design, and economic analyses.

Finally, a presentation has been developed to illustrate how an analysis of oil processing options can increase the value of oil production on Native American Tribal and Alaskan Native Corporation lands.

Feasibility Study for a Petroleum Refinery for The Jicarilla Apache Tribe.

2.0 Executive Summary

This project was a feasibility study for a petroleum refinery for the Jicarilla Apache Indian Reservation. The objectives of the study were to evaluate the viability of the proposed refinery and to identify methods of analysis which could be applicable to other Tribes and Native American Corporations.

The study began with a survey of the production volumes in the vicinity of the reservation. The crude oil producing geologic formations were identified. It was established that crude from the same formations had consistent properties across the geographic area. The annual production volume for each well in the geographic area was determined. The production volumes were sorted and accumulated according to the geologic formation of the well. It was determined that there was approximately 6,000 barrels per day of available crude oil production in the geographic area.

A sampling program was established to obtain crude oil samples from each of the geologic formations in the area. The samples were obtained from wells and gathering points at the locations where it was transferred to trucks for transportation to refineries. The crude samples were representative of the crude oils which would be delivered to the proposed refinery. The crude oil sampled had been subjected to any weathering or separation that would be typical. The crude oil samples were collected in containers which were liquid and vapor tight. The sample containers were transported in a larger insulated container with ice to keep the samples cold and insure that the samples wouldn't be weathered during transport.

The samples were sent to a laboratory that specializes in crude oil analyses. The laboratory used standard ASTM test methods and procedures to analyze the crude oil samples. The analyses determined the properties necessary to establish the process design and preliminary engineering of the proposed refinery. The analyses determined that the crude oils were generally light and sweet. A light crude is made up of more lower boiling components than heavy crudes. Light crudes produce more gasoline and diesel fuel with less processing than heavy crudes. A sweet crude has a lower sulfur content than a sour crudes. Gasoline and diesel specifications limit the sulfur content of the products produced from the crude. A sweet crude requires less processing to remove sulfur than a sour crude does. The crudes were also determined to have a very low asphalt content and were waxy. Asphalt is a salable product from a refinery, and a high asphalt content could be an advantage. If asphalts are not present in salable quantities in the crude, it is desirable that the concentrations be low enough to not interfere with alternate processes. The high wax content of the crude limits the value of the heavier crude oil fractions for use as fuel oil or lubricating oil stocks. Processing of the heaviest fractions of these crude oils is necessary to obtain salable products.

Armed with the analytical results, a survey was made of the available technologies for processing the available crude oil. Process units were selected and a process

design was developed to produce a maximum value of salable products with a minimum of processing. Based on the nature of the crude oils, it was determined that the process could utilize a non-traditional crude oil fractionation unit that would separate only the process gas, naphtha, and kerosene fractions from all of the heavier fractions in the crude oil. The crude unit would be smaller and operate at a lower temperature than traditional crude units which also made separations of diesel and gas oil fractions. All of the heavier fractions would be processed together to remove sulfur and to convert the waxy heavier oils to maximize gasoline and diesel production.

In the proposed refinery process, the crude oil is received and pumped to a crude fractionation unit. The crude fractionation unit uses steam distillation to separate the crude into fractions of components of different boiling ranges. Any non-condensable gas is recovered for use as fuel in the refinery (process gas). The light and heavy naphtha fractions are recovered for additional processing and for blending the finished gasoline product. The kerosene fraction is separated and stored. With filtration and drying, the kerosene will become the jet fuel product. All of the heavier fractions are removed from the crude unit as one bottoms stream for additional processing.

The heavy naphtha from the crude unit is processed in a naphtha hydrodesulfurizer to remove the sulfur and any metals which are present. The desulfurized naphtha is processed in a naphtha reformer to produce a high octane gasoline blend stock. The reformer also produces hydrogen which is consumed in the hydrodesulfurizer and hydrocracker units. The bottoms fraction from the crude unit is processed in a specialized hydrocracker unit which removes sulfur, converts the waxy compounds and cracks the heavier boiling compound to produce diesel fuel and gasoline fractions. The sulfur is removed from the units as hydrogen sulfide which is collected with the process gas. The process gas is processed to separate the hydrogen sulfide and convert it to elemental sulfur. The gasoline and naphtha products from the process units are collected and blended to produce the final gasoline product.

Based on the process design the principal products from 6,000 barrels per day of crude oil would be 3,600 barrels per day of gasoline, 470 barrels per day of jet fuel, and 1,900 barrels per day of diesel fuel. The value of these products was determined to be approximately $87,500,000 for 2003. Based on the preliminary engineering of the process, it was determined that it would cost approximately $86,700,000 to construct the refinery. It would also cost about $10,600,000 to operate the refinery every year. The project would have a return on investment of 20%. In a highly competitive crude oil market, the price of crude oil would rise relative to the value of the products and the return would drop to 4%. Under these highly competitive conditions, the tribe would still benefit because it would realize higher revenues for the crude oil it produces.

The completion of a study such as this one gives a Tribe or Native American Corporation the knowledge necessary to evaluate processing options and also to be a more savvy marketer of its crude oil production.

3.0 Experimental

This study utilized only standard laboratory methods for crude oil analysis. These are detailed in Section 4.1.6.

4.0 Results and Discussion

This results and discussion section incorporates the written deliverable reports as the following sections:

4.1 Survey and Characterization of Crude Oils

4.2 Preliminary Engineering and Process Design

4.3 Economic Analysis of a Proposed Petroleum Refinery

4.1 Survey and Characterization of Crude Oils.

4.1.1 Introduction

The first step to any new crude oil processing project is to identify the quantity and quality of crude oil available. The local sources of production, both on and in the vicinity of the reservation were determined. Much of the production on the tribal lands is controlled by production companies which have leased sections for development. These leaseholders pay a royalty to the tribe for the oil produced. A refinery constructed on the tribal land would have equal access to purchase crude oil from both on and off of the reservation.

The predominant crude oil formations were identified. A geographical basis was selected. The production volumes were determined. Samples were taken from each selected formation. The samples were analyzed to determine the relevant properties for the process design.

4.1.2 Description of San Juan Basin in New Mexico

The Jicarilla Apache Reservation is located in the San Juan Basin of Northwest New Mexico. The Reservation is located at the eastern edge of the basin. The basin in New Mexico is generally considered to extend from Range 1W through Range 15W and from Township 22N through Township 32N.

The oil producing formations identified were the Gallup, Mesa Verde, Mancos, Dakota, Pictured Cliffs, Sanastee, and Chacra formations.

Further information about the site area can be obtained from "Environmental Assessment for Reconstruction of New Mexico State PLH 1352", N.M. State Highway,[(1)]. Figure 4.1.1 shows the approximate area of the San Juan Basin in New Mexico.

4.1.3 Geography

The Jicarilla Apache Reservation spans the eastern edge of the San Juan Basin from north to south. The reservation basically extends in an irregular shape from Township 22N through Township 32 N and from Range 1E through Range 5W.[(2)]

There is an existing refinery in the San Juan Basin. It is owned by Giant Refining Company and is located in Bloomfield, New Mexico. To minimize direct competition with the existing refinery, a geographical basis from Range 1E through Range 8W was selected. This basis area will include production which is closer to the proposed site than it is to the existing refinery or which is as easily accessible to the site as to the proposed refinery. The basis area includes all of the production from the tribal land and in the vicinity of the tribal land.

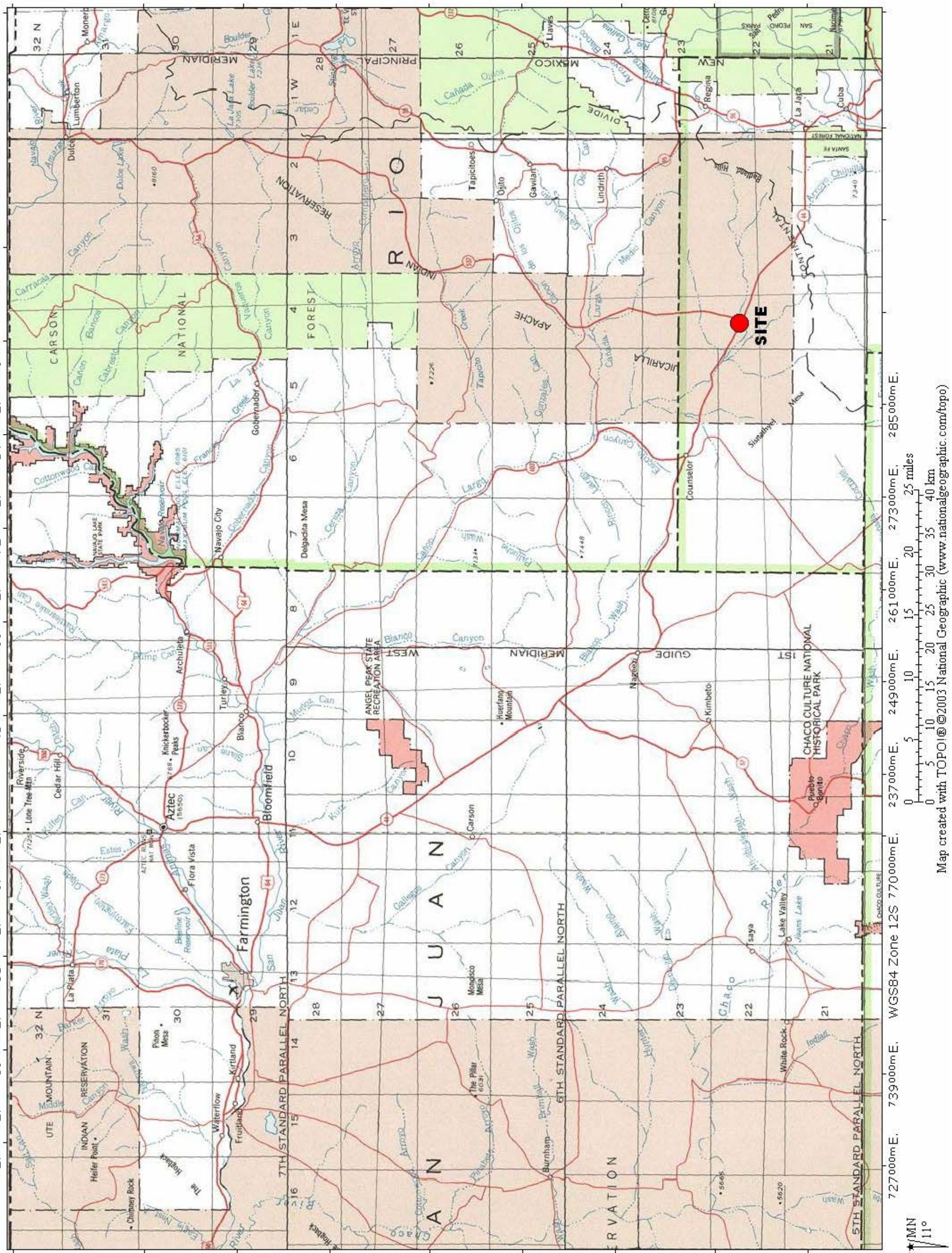

Figure 4.1.1: San Juan Basin in New Mexico

4.1.4 Production

The production data was compiled by the Petroleum Information/Dwights New Mexico[3] database to which JAECO subscribes. The database lists each well in the San Juan Basin and includes cumulative and last 12 months oil and gas production as well as location and formation data.

The production data was extracted from the database by formation and township/range coordinates. The last 12 months oil production data were isolated. The data were was then analyzed to determine the production volumes by formation and by distance from the site.

Within the geographic basis, a production volume of 2,024,000 barrels of oil was recorded for the twelve months of 2002.[4] This is equivalent to an average daily production of 5,867 barrels of crude oil per day.

Figure 4.1.2 illustrates the daily average production volumes by formation. Four formations are the predominant oil producers. The Gallup formation accounts for 45% of the production. The Mesa Verde formation accounts for 23% of the production. The Dakota formation accounts for 21% of the production and the Mancos formation accounts for 10% of the production. The remaining three formations; Pictured Cliffs, Sanastee, and Chacra account for less than 1% each. Based on this production data, a design basis for the process plant was selected as 6,000 BPSD of crude oil based on the predominant four crude formations.

Figure 4.1.3 illustrates the production volume by distance to the site. The bulk of the production in the geographic basis area is between ten and thirty miles from the proposed site. The decline in production away from the site indicates that competition for crude supply with the existing Bloomfield refinery is less likely. Figure 4.1.4 through Figure 4.1.8 illustrate the distribution of production by formation in ten mile increments from the site. Within 20 miles of the site, Gallup is the predominant producing formation. From 20 to 30 miles from the site, the production is split fairly uniformly between the four predominant formations. Between 30 and 40 miles from the site, the production is mostly from the Mesa Verde and Dakota formations and beyond 40 miles Mesa Verde is predominate.

4.1.5 Sampling

Sampling procedures were developed to obtain samples which were characteristic of the proposed refinery feed stock. The sampling program concentrated on the four predominant formations plus the Pictured Cliffs formation. The samples were taken from production sites within each formation. The samples were collected from the gathering point where the crude oil would be loaded onto trucks for transportation. The samples were representative of the crude oil which would be delivered to the refinery. The samples would reflect any effects of weathering or gas-oil separation which might be experienced between the wellhead and the process unit.

Figure 4.1.2
Production Volumes by Formation

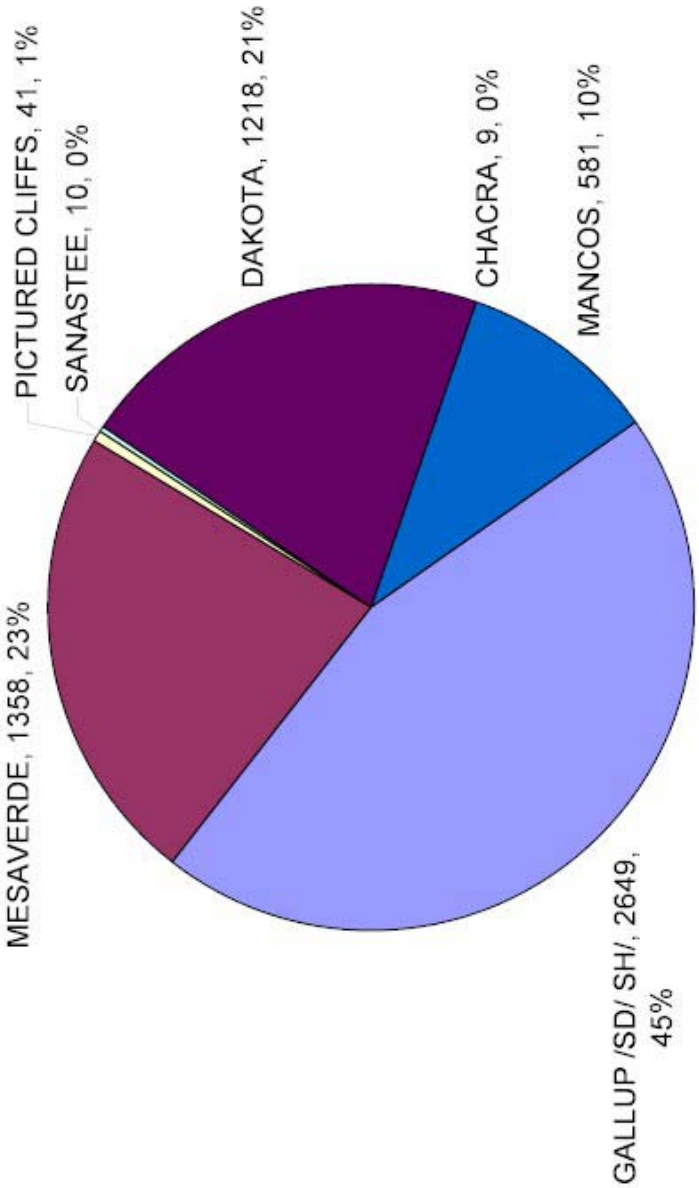

Figure 4.1.3
Production Volumes by Distance From Site

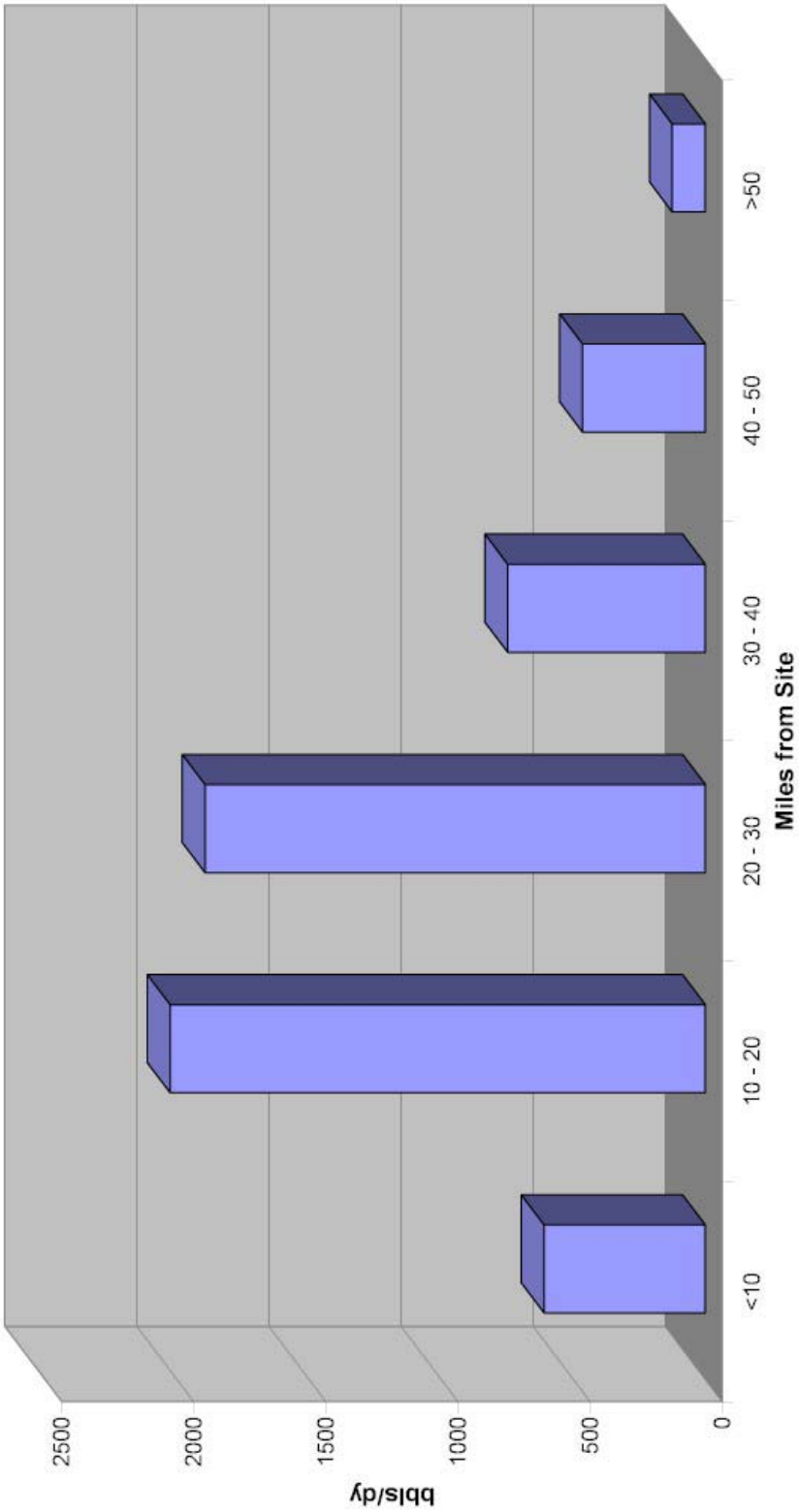

Figure 4.1.4
Production Less Than 10 Miles From Site

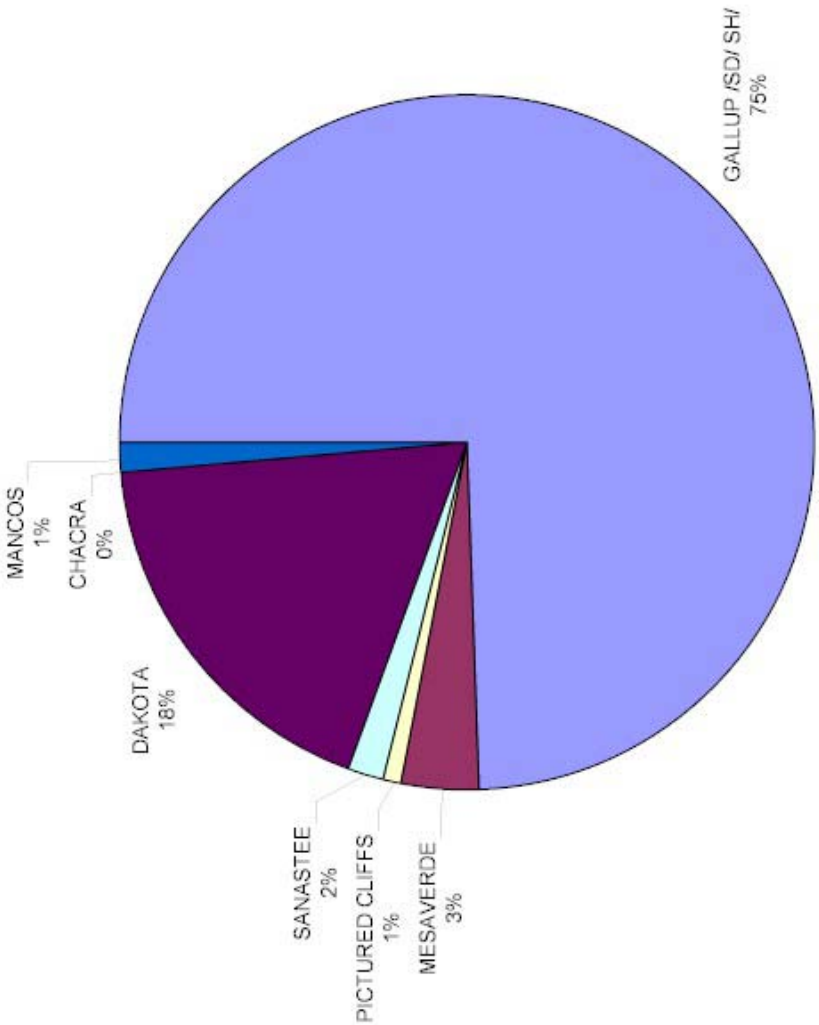

Figure 4.1.5
Production Between 10 and 20 Miles From Site

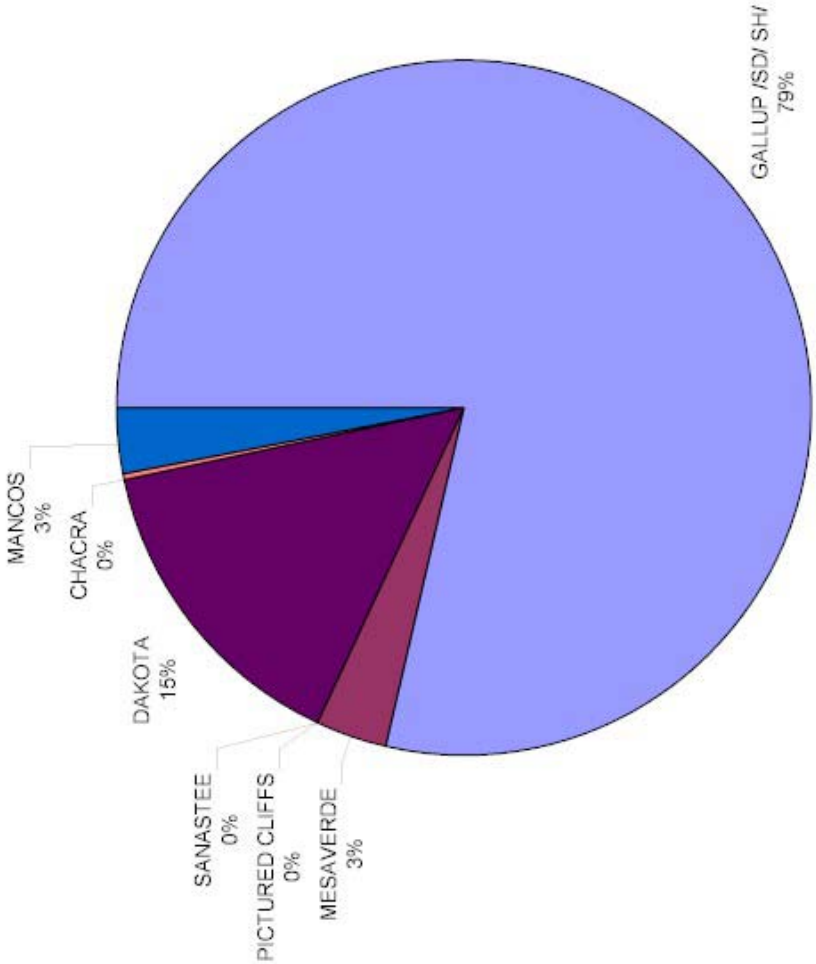

Figure 4.1.6
Production Between 20 and 30 Miles From Site

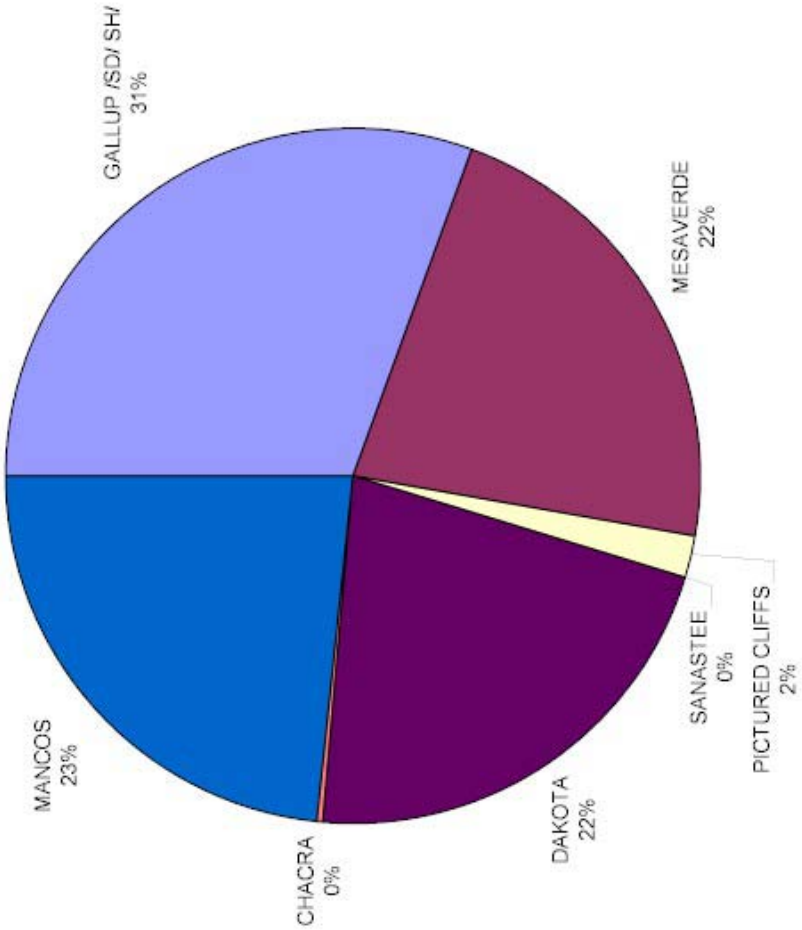

Figure 4.1.7
Production Between 30 and 40 Miles From Site

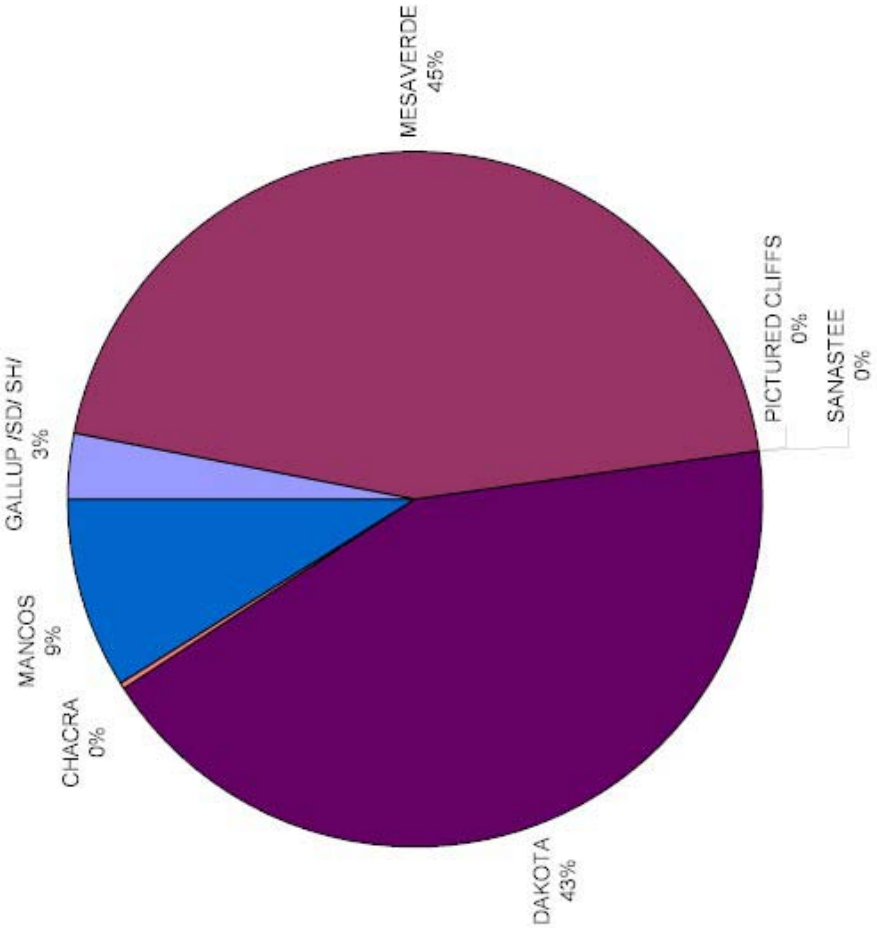

Figure 4.1.8
Production Between 40 and 50 Miles From Site

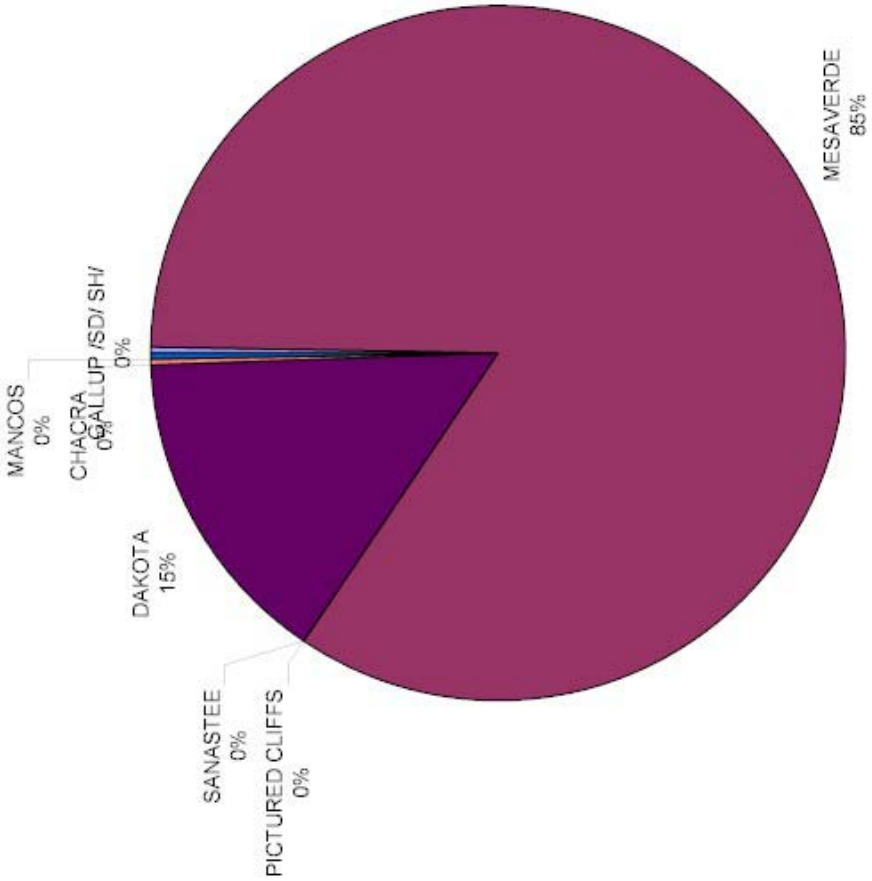

The samples were taken in containers supplied by or approved by the analytical laboratory. The laboratory supplied special containers for volatile samples. The sample containers were filled then placed on ice for transportation to the laboratory. A documented chain of custody was maintained between the sample point and the laboratory.

Falkner-Red River Laboratories of Bossier City, Louisiana was the primary laboratory.[5] The samples were stored under refrigeration at the laboratory. The samples were split for various analyses and smaller samples were sent to Core Laboratories in Houston, Texas[6] for specialized analyses.

4.1.6 Analysis

Falkner-Red River Laboratories performed the ASTM D-86 crude and fractional distillation analyses and primary properties analyses. Core Laboratories performed the ASTM D-5307 simulated vacuum distillation, nitrogen, bromine number, and capillary gas chromatography.

The ASTM D-86 crude distillation gives the volume vaporized vs. temperature curve for the whole crude oil. This provides an indication of the volumes of the various fractions which can be produced in a crude fractionation column. This data is also used in the process design to produce true boiling point curves used to determine the design parameters.

The fractional ASTM D-86 distillations are separate distillation of each of the fractions which would be produced by a crude fractionation column. The temperature ranges for the fractions are based on the ranges to meet desired product specifications. The fractional distillations provide information regarding the quality of straight-run productions from the crude fractionation unit. They also provide information needed for the design of downstream processing units.

The primary property information includes the sulfur content of the whole crude and the fractions, and properties of interest for specific fractions. The smoke point and cloud point were determined for the jet fuel fraction. The aromatics and olefins content were determined for the gasoline and jet fuel fractions. The viscosity was determined for the heavier fractions. The presence of wax in the residue was also determined.

The Mesa Verde crude was very light. It produced only gasoline and jet fuel fractions. The diesel fuel and heavier fractions weren't present. The other crude oils sampled had a heavier than diesel fraction which required further analysis. The D-86 atmospheric distillation gives vaporization results to 650°F. Above 650°F, the hydrocarbons begin to thermally decompose. Typically, an ASTM D-1160 vacuum distillation is performed to characterize the fractions which boil above 650°F. The waxy nature of these crude oils, however, make the D-1160 problematic. As an alternative, Core Laboratories performed ASTM D-5307 simulated distillations. This procedure uses capillary gas chromatography to analyze the components of the crude and estimate the full range distillation to 1,000°F.

The nitrogen content of the crude oils and the bromine numbers of the residual fractions were also determined. These are indicative of the olefins and asphalt content of the crude and provide information for the process design of downstream cracking units.

4.1.7 Results

The complete, raw results are cataloged in Attachment 1. The data are provided for each of the crude oils analyzed.

Figure 4.1.9 shows the distillation curves for the crude oils sampled. The API Gravities of the crude samples are shown in Table 4.1.1 along with the API Gravities of common refined products and benchmark crudes. The API gravity is inversely related to specific gravity. A higher API Gravity indicates a lower specific gravity and a "lighter" oil. A lower API Gravity indicates a higher specific gravity and a "heavier" oil. The crude oils sampled were generally light.

Table 4.1.1: API Gravity of Crude Samples

Crude	API
GALLUP	43.9
MESAVERDE	60.3
PICTURED CLIFFS	34.9
DAKOTA	41.3
MANCOS	32.5

The sulfur contents are shown in Table 4.1.2. Sulfur in finished products is regulated and the products are typically desulfurized to remove the sulfur to an acceptable level. Crude oils with lower sulfur contents are called "sweet" and require less desulfurization. Crudes with higher sulfur contents are called "sour" and require more desulfurization. The crude oils sampled were generally sweet.

Table 4.1.2: Sulfur Content of Crude Samples

Crude	wt% Sulfur
GALLUP	0.11
MESAVERDE	0.03
PICTURED CLIFFS	0.06
DAKOTA	0.027
MANCOS	0.148

The nitrogen content and bromine numbers are indicators of olefin and asphalt content. The nitrogen contents of the samples were all less than 100 ppm wt. The bromine numbers were all less than 10 g/100g. These numbers indicated that the atmospheric reduced crude was suitable as feed to a Unicracker.

Figure 4.1.9: ASTM D-86 Distillations

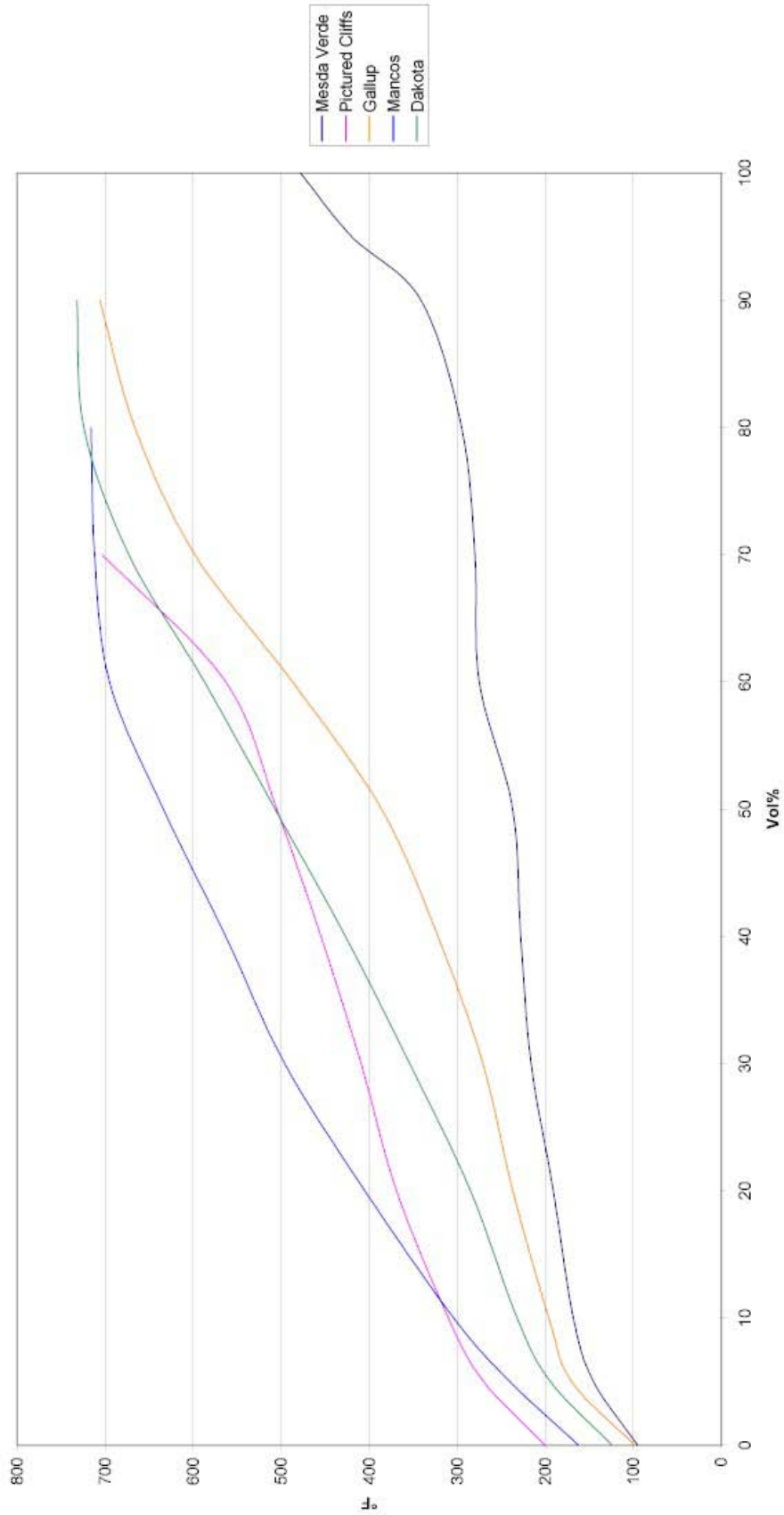

The gas chromatography analysis results were recombined in fractions proportional to the proposed mixture of crude oils to be used as feedstock. The combined fractional analyses were provided to vendors to be used as a design basis for the downstream units; the naphtha hydrodesulfurizer/reformer and the Unicracker.

4.1.8 Indications

The crude oils available to the proposed refinery on the Jicarilla Apache Reservation are generally light and sweet. The crude oils have little dissolved non-condensable gas. The feedstock will make gasoline, diesel, and jet fuel, but will also have a residual heavy oil that will require further processing. The diesel fuel will require desulfurization to produce an ultra-low sulfur diesel product.

The atmospheric residual is waxy and has a low asphaltic content. It will not produce an asphalt product. The residual is primarily suited as feed to a cracking operation. To optimize the use of capital, it was proposed to combine the diesel desulfurization within a unit which would also accomplish dewaxing and cracking of the residual to produce gasoline and ultra-low sulfur diesel fuel from the heavy residual.

Prior to this analysis, neither the Tribe nor many of the leaseholders had an understanding of the composition or properties of the crude oils they produced. With a thorough analytical evaluation, it is possible to understand the value of the crude oil produced and to make comparisons of options for oil processing or for transportation of the crude oil to other markets for processing.

4.2 Preliminary Engineering and Process Design

4.2.1 Introduction

This report is of the engineering and process design of the proposed oil refinery for the Jicarilla Apache Indian Reservation. This engineering and process design was completed as part of a Department of Energy funded feasibility study. The process design will establish the process and equipment requirements for a refinery to process the crude oils available in the vicinity of the reservation. The capital and operating costs for such a refinery will be estimated based on the process design.

The process design is based on the analytical and production data generated for the crude oils available for processing in the vicinity of the Jicarilla Indian Reservation. The objective of the process design is to determine the quantity and quality of the products which can be produced, the major equipment units which will be necessary to complete the processing, and to establish a basis for determining the potential economics of a refinery project.

The process design of the proposed refinery takes advantage of some innovative process schemes which became possible based on the analytical properties of the feedstock. A block process flow diagram was developed which identified the required process units. A detailed process flow diagram was developed for each of the process units. The design and product parameters were evaluated for each process unit.

Based on the design information and the infrastructure requirements a site plan was developed for the proposed refinery. A potential location was selected and available utilities were identified.

The predicted products from each process unit were combined to project a product slate for the refinery. A product slate is a tabulation of the product types and quantities produced by the refinery. The product slate is used to forecast the potential revenues from the refinery.

Finally, with all of the design information compiled, estimates of the capital and operating costs of the proposed refinery were determined.

4.2.2 Innovations

Based on the analytical results it was determined that the composite feedstock was a light sweet crude oil with little asphalt content. It was proposed that the diesel and heavier fractions could be processed in a single hydroprocessing unit which would accomplish distillate desulfurization and dewaxing, and hydrocracking of the heavier fractions. A single unit would simplify the process. It would also conserve capital because one larger unit would cost less than two smaller units. Additionally, these units are typically designed for use at larger refineries.

Combining streams which would normally be processed separately, brings the unit to the size which is familiar to packaged equipment manufacturers.

It was determined that the UOP Unicracker[1] could be used to accomplish the desired processing. The diesel and heavier fractions can be processed together. The crude fractionation unit would separate the crude oil into fractions of light and heavy naphtha, kerosene, and then the bottoms. Because the crude unit wouldn't separate this bottoms product to produce diesel and light and heavy gas oil products, the crude fractionation unit could be operated at a lower temperature. Less energy would be required, and the unit could be made smaller and less expensive.

One obstacle to efficient smaller refineries has been the need to use hydroprocessing to produce a full range of products. The hydrocrackers and desulfurization units consume hydrogen. Hydrogen plants consume natural gas or salable products and have been one of the least efficient and most capital intensive processes in the integrated refinery. Some smaller refineries have used hydroskimming – using hydrogen produced in naphtha reformers to supply desulfurization units. Hydroskimming generally can't supply enough surplus hydrogen to operate a hydrocracker or catalytic dewaxing unit, however. The developments in catalyst technologies in conjunction with the properties of these crude oils have allowed optimization of reformer hydrogen production and hydrocracker hydrogen consumption. The reformer in this process produces sufficient hydrogen for the hydrocracker in this process and a hydrogen plant is not required.

4.2.3 Process Flow Diagram

Figure 4.2.1 is the block flow diagram for the proposed refinery. The crude feed enters the process at the crude fractionation unit. The crude is separated into the straight-run fractions or cuts. The overhead product from the crude unit is process gas which is present in small quantities in the crude feed and may contain some hydrogen sulfide. The process gas is blended with sour process gas from other units.

The first and second side products from the crude unit are light and heavy naphtha. The light naphtha may be segregated for gasoline blending or combined with the heavy naphtha to feed the Naphtha HDS/Reformer units.

The third side product is kerosene which will be sold as a straight-run product or filtered to make a jet fuel product. The bottoms product from the crude unit will feed the Unicracker unit.

The naphtha hydrodesulfurizer (HDS) uses a solid bed catalyst and hydrogen under pressure to remove sulfur from the naphtha. It is necessary to remove sulfur from the naphtha prior to using it as feed to the reformer. The sulfur is removed in the form of hydrogen sulfide gas. The H_2S gas is removed with some process gas and hydrogen from the HDS unit.

FIGURE 4.2.1: REFINERY BLOCK FLOW DIAGRAM

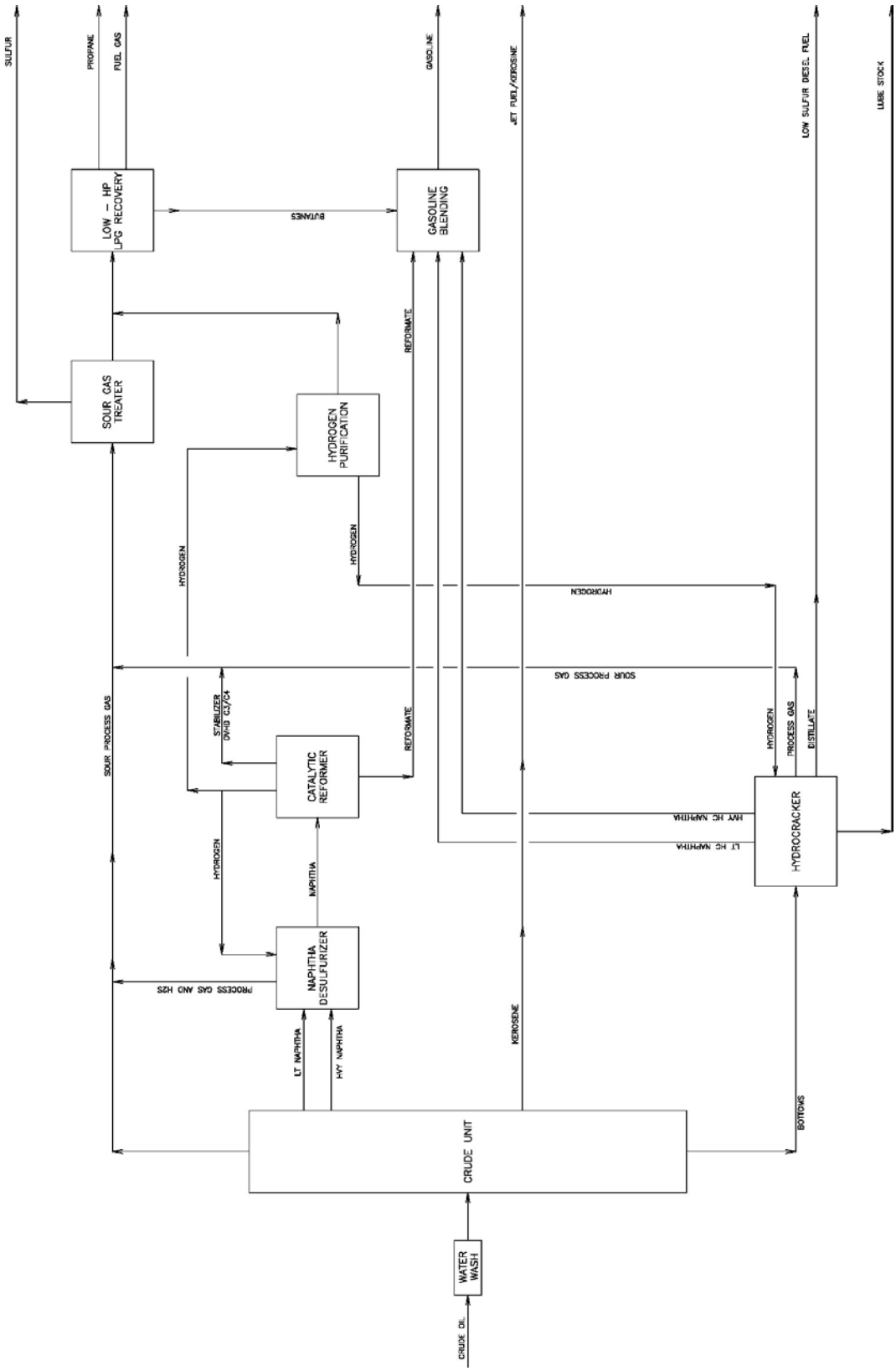

The desulfurized naphtha from the Naphtha HDS unit is used as feed to the Naphtha Reformer Unit. The reformer uses a solid bed platinum catalyst and a carefully controlled temperature and pressure to convert the straight-run naphtha into high octane reformate. The reformate is then used for gasoline blending. The reformer increases octane by increasing the aromaticity of the naphtha. Hydrogen is removed in the process as carbon atoms which were bonded to hydrogen atoms form additional bonds with other carbon atoms. The reformer produces enough hydrogen to supply the Naphtha HDS unit. The reformer also produces surplus hydrogen to supply the Unicracker.

The Unicracker is a specially designed UOP hydrocracker unit. The Unicracker is a multifunction unit. It uses hydrogen, carefully controlled temperature and pressure, and a combination of solid bed catalysts to remove sulfur and to break long hydrocarbon chains into shorter chains. The products from the Unicracker are light and heavy naphtha, low sulfur distillate, and some process gas with H_2S.

A sour gas treater with sulfur recovery unit will separate the H_2S from the process gas and reduce it to elemental sulfur in a liquid redox process. Clean process gas is also recovered and will supplement natural gas as fuel to the process heaters throughout the various units.

4.2.4 Process Unit Descriptions

a. Crude Unit

The crude unit process flow diagram is shown in Figure 4.2.2. The crude is pumped from the storage tanks to the process through the feed pump, P-101. The crude is then heated by heat exchange with the tower bottoms in heat exchanger E-101 and then again with a heat transfer fluid in exchanger E-102. The crude is warmed to about 225°F before entering the desalter. The desalter removes potentially corrosive salts and water from the crude before it is heated and introduced to the fractionation tower.

The desalted crude is further heated by heat exchange with the tower bottoms in E-103 and then heated to the final feed temperature of 500°F in the crude feed heater, H-101. The hot crude feed is introduced to the crude fractionation tower, V-101, at the 18th of 21 stages. The crude fractionation tower separates the crude into fractions of different boiling ranges which make up the products of the process. As stated previously, the crude fractionation tower produces fractions of light and heavy naphtha, kerosene, and the diesel and heavier bottoms. The tower runs cooler and has fewer trays than a traditional crude tower.

FIGURE 4.2.2: CRUDE UNIT PROCESS FLOW DIAGRAM

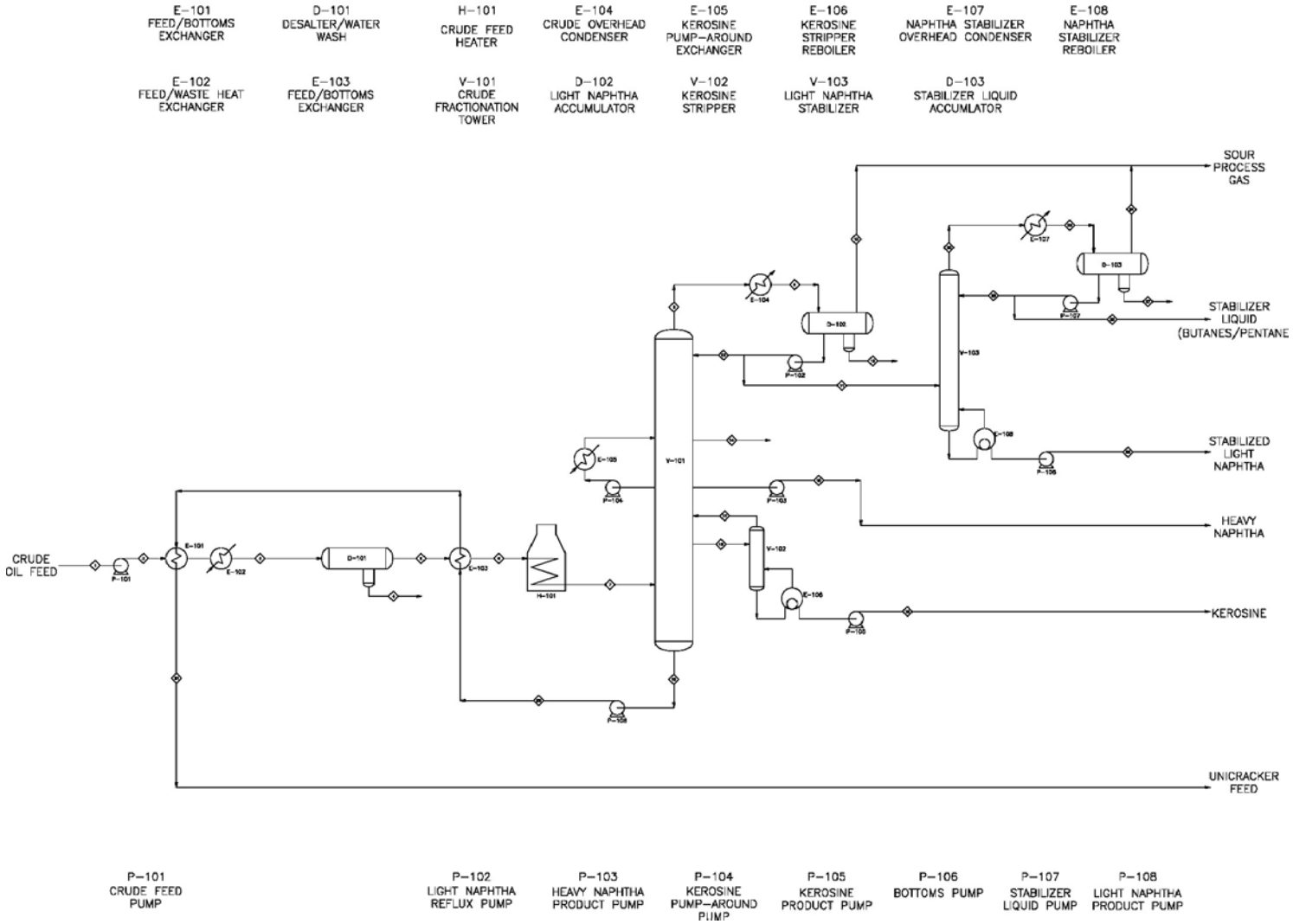

The crude fractionation tower was modeled using the Hysim process simulator. The tower was specified based on 21 stages – 20 trays plus a partial condenser. The stages are numbered from the top down such that Stage 1 is the condenser and Stage 21 is the 20th tray in the tower. A side stripper with three stages was added to the kerosene product draw to refine the kerosene product. A pump-around was added above the kerosene draw to improve the tower performance. The tower was specified to produce a minimum of non-condensable process gas. Product specifications for the light and heavy naphtha and kerosene products were also included. The pump-around flow and heat exchanger duty and the kerosene side stripper reboiler duty were specified. The crude fractionation tower has a water cooled overhead condenser. Steam is added to the bottom of the tower to help strip the lighter fractions from the bottoms. The crude fractionation tower was determined to be 5 feet diameter and approximately 70 feet tall.

From a feed rate of 6000 BPD, the crude fractionation tower produces a minimum amount of process gas, about 330 BPD of light naphtha, 2840 BPD of heavy naphtha, 470 BPD of kerosene, and 2360 BPD of bottoms. The light naphtha contains dissolved light hydrocarbons which have too high a vapor pressure for gasoline. The light hydrocarbons are removed from the light naphtha in the naphtha stabilizer tower, V-103.

The light naphtha stabilizer tower is a 19 stage distillation tower. It removes about 70 BPD of light hydrocarbon process gas and produces about 260 BPD of stabilized light naphtha. The naphtha stabilizer tower has a water cooled condenser, E-107, and steam reboiler heat exchanger, E-108.

The heat demand of the crude unit is the sum of the duties of E-102, H-101, E-106, E-108, and the steam added to the crude tower. These demands add to a fired duty of about 25 MMBtu/hr plus about 300 lb/hr of 60 psig steam.

Table 4.2.1 summarizes the yields of straight-run products from the crude unit. The raw Hysim data[7] are included in Attachment 2.

Table 4.2.1: Crude Unit Yield Summary

	Bbl/dy
Crude Feed	6000
Fuel Gas	78 SCFH
Butanes	70
Light Naphtha	260
Heavy Naphtha	2850
Kerosene	470
Hydrocracker Feed	2350

b. Naphtha HDS

The Naphtha Hydrodesulfurizer is based on a UOP Unifining technology[8]. The process flow diagram for the Naphtha HDS Unit is shown in Figure 4.2.3. The HDS unit is necessary to remove sulfur and other contaminants prior to using the naphtha as feed to a catalytic reformer. The Unifining technology has been licensed since 1952. The process uses hydrogen at specific temperatures and pressures in the presence of a catalyst to remove sulfur, nitrogen, and metals and to saturate olefins and potentially aromatics.

The straight-run naphtha from the crude unit is pumped to the HDS unit with the HDS reactor charge pump, P-201. The naphtha charge is pumped up to the operating pressure of the reactor at approximately 350 psig. The charge is mixed with recycle hydrogen and warmed by heat exchange with the reactor effluent in the feed/effluent exchanger, E-201. The combined reactor charge is then further heater to about 550°F in the Naphtha HDS Feed Heater, H-201. The reactor charge enters the first of two reactor beds, R-201. The reactors utilize cobalt-molybdenum and nickel-molybdenum catalysts. The bed area of the first reactor is optimized for removal of metals. The remainder of the reactor is optimized for desulfurization, denitrification, and olefin saturation. The effluent from R-201 is mixed with additional recycle hydrogen before entering the second reactor bed, R-202.

The effluent is cooled with the reactor charge in E-201 and further cooled with the separated effluent liquid in E-202. The effluent trim cooler, E-203, reduces the effluent temperature to condense the desulfurized naphtha, H_2S, and any process gas and ammonia that formed in the reactor. The hydrogen is not condensed and is separated in the HDS Separator Drum, D-201, for recycle. The hydrogen recycle is integrated with the reformer hydrogen system.

The separated effluent liquid is warmed in E-202 and then fed to the Naphtha HDS Stripper, V-201. The stripper separates the process gas, H_2S, and ammonia from the desulfurized naphtha. The steam reboiler, E-205, provides heat to the stripper. The water cooled condenser, E-204, condenses the reflux to the tower. The reflux liquid is separated from the sour process gas in D-202. The desulfurized naphtha is pumped by P-203 directly from V-201 to the reformer.

c. Naphtha Reformer

The naphtha reformer is based on UOP Platforming technology[9]. The first UOP platforming unit went on-stream in 1949. In the platforming process, naphtha is reacted with a platinum based catalyst at elevated temperatures and with hydrogen at a specified pressure. The naphtha produces a high octane liquid product (reformate) and byproducts of hydrogen and process gas. The reformer produces enough hydrogen to supply the Naphtha HDS Unit. The high octane reformate is rich in aromatic compounds.

FIGURE 4.2.3: NAPHTHA HDS UNIT PROCESS FLOW DIAGRAM

H-201 NAPHTHA HDS FEED HEATER	R-201 NAPHTHA HDS REACTOR FIRST STAGE	E-202 EFFLUENT/NAPHTHA EXCHANGER	D-201 HDS SEPARATOR DRUM	E-204 NAPHTHA STRIPPER OVERHEAD CONDENSER	D-202 NAPHTHA STRIPPER REFLUX ACCUMULATOR
E-201 FEED/EFFLUENT EXCHANGER	R-202 NAPHTHA HDS REACTOR SECOND STAGE	E-203 EFFLUENT COOLER	C-201 HDS NAPHTHA RYCLE COMPRESSOR	V-201 HDS NAPHTHA STRIPPER	E-205 NAPHTHA STRIPPER REBOILER

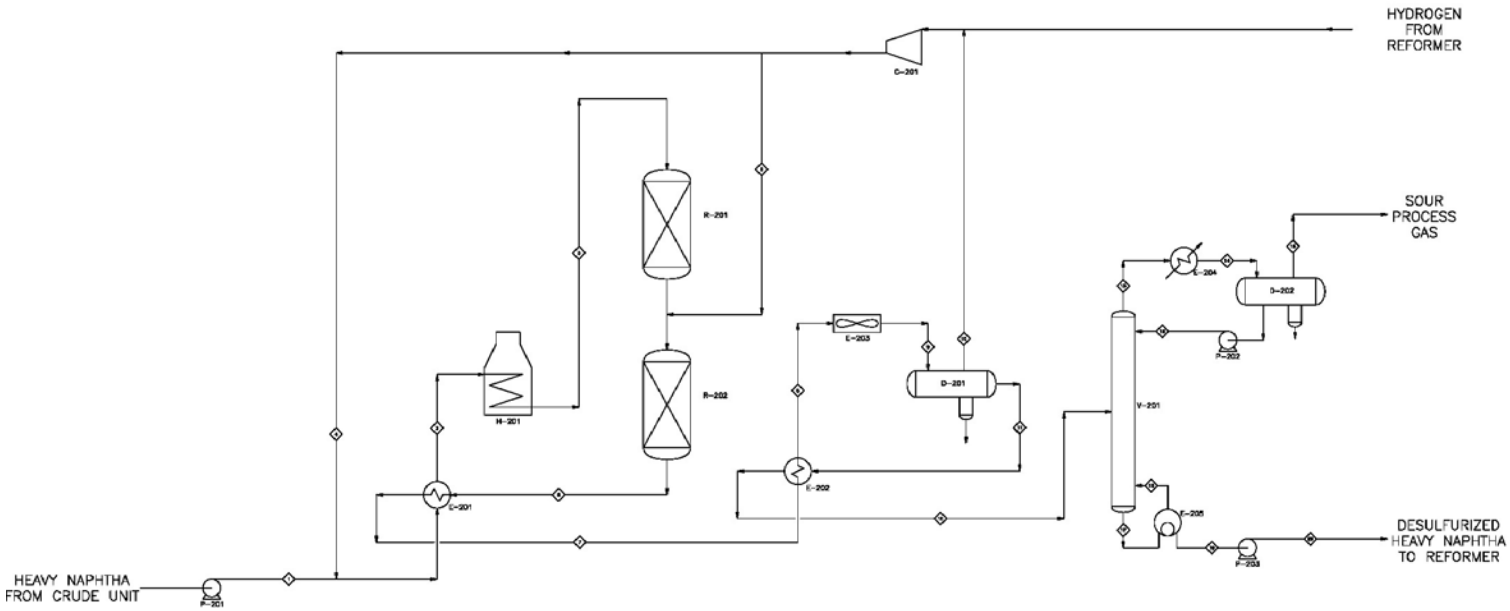

P-201 HDS REACTOR CHARGE PUMP	P-202 NAPHTHA STRIPPER REFLUX PUMP	P-203 DESULFURIZED HEAVY NAPHTHA PRODUCT PUMP

There are two types of platforming processes: semiregenerative and continuously regenerative. The semiregenerative process uses relatively simple fixed catalyst beds, but requires an annual shut-down for catalyst regeneration and requires a higher operating pressure and hydrogen recycle to suppress coke formation. The continuously regenerative process uses a moving bed reactor with catalyst being continuously removed from the bottom of the last stage of the reactor, regenerated, and returned to the top of the first stage of the reactor. The continuously regenerated units don't require annual shut-downs. They are also able to operate at much lower pressures because coke build-up is not a concern. The semiregenerative process was selected for this application because of its lower cost, simplicity, and because the required severity resulted in modest increase in reactor pressure.

The process flow diagram for the reformer unit is presented in Figure 4.2.4. The desulfurized naphtha from the Naphtha HDS Unit is pumped to the reformer with the reformer charge pump, P-301, or alternatively directly with the Naphtha HDS Product Pump, P-203. The feed is pumped up to the reactor pressure which is between 150 and 175 psig. The naphtha is then mixed with recycle hydrogen. The combined charge is warmed in the feed/effluent exchanger, E-301, and then heated to the reactor inlet temperature of 600° to 650°F in the first reactor charge heater, H-301. The charge is then passed through the first reactor, R-301. The reaction is endothermic, so the effluent stream has to be reheated between successive reactor stages. The effluent is reheated and charged to two successive reactors, R-302 and R-303.

The effluent from the final reactor, R-303, is cooled in E-301 and then further cooled in the exchangers, E-302 and E-303. The hydrogen is separated from the cooled effluent in the hydrogen separator, D-301. The hydrogen is compressed in the compressors, C-301 and C-302, for recycle to the reformer and for the hydrogen product. The separated effluent is then warmed in E-304 and fed to the reformer stabilizer column, V-301. The stabilizer column separates the process gas from the reformate. The column is a traditional distillation tower with a fired reboiler, H-304, and a water cooled condenser, E-305. The stabilized reformate product is pumped from V-301 with P-303. It is cooled by exchange with the column feed in E-304 and then cooled to storage temperature in E-306.

The reformer hydrogen product is approximately 85% H_2. Some of the hydrogen product is routed directly to the Naphtha HDS Unit. The Unicracker requires a higher purity of hydrogen. The balance of the hydrogen product is routed to the Hydrogen Purification Unit.

FIGURE 4.2.4: REFORMER PROCESS FLOW DIAGRAM

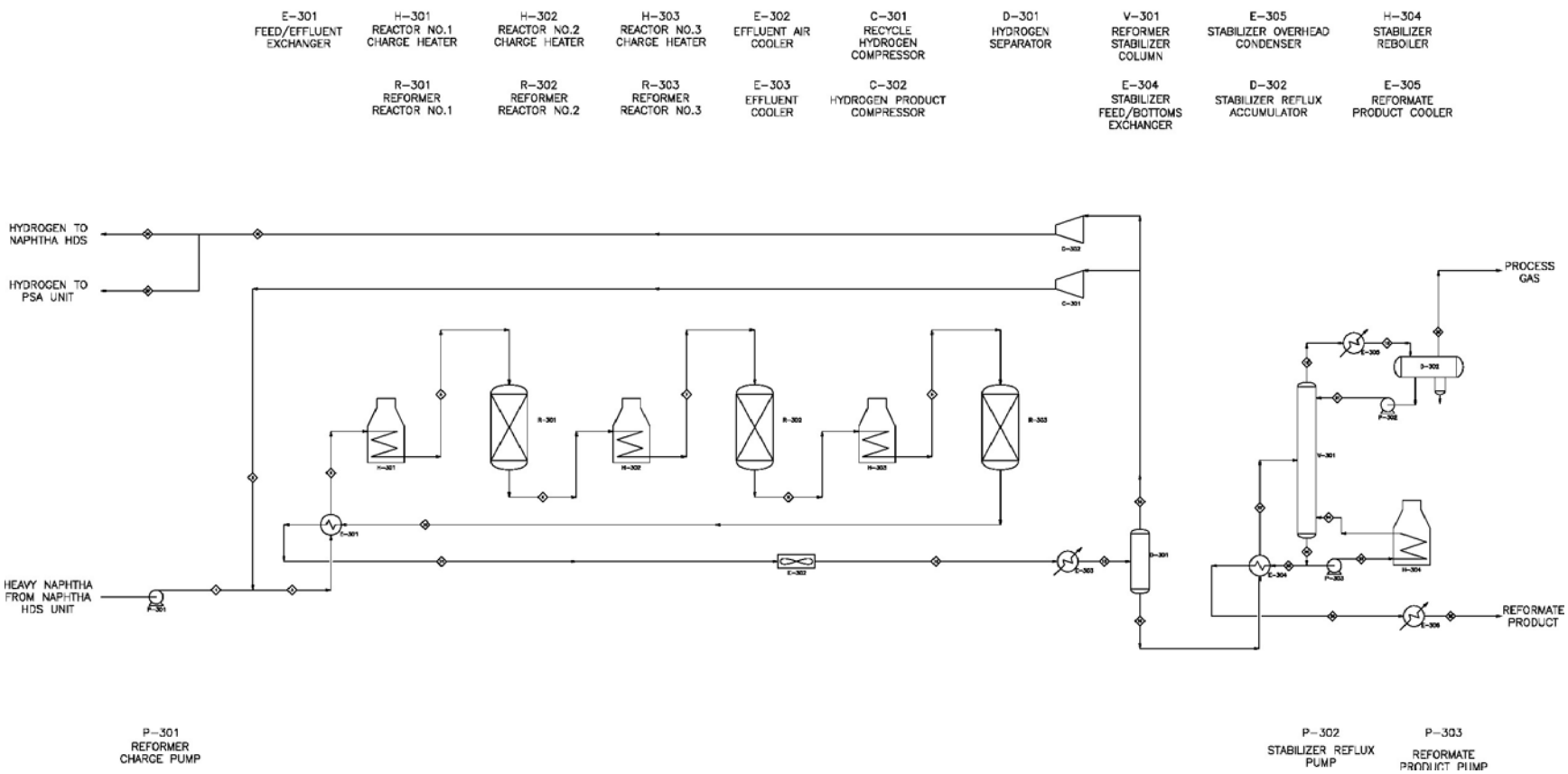

Table 4.2.2 summarizes the yields from the Naphtha HDS/Reformer system. The principal product is reformate, a 97+ octane gasoline blend stock.

Table 4.2.2: Naphtha HDS/Reformer Yield Summary	
	Bbl/dy
Heavy Naphtha Feed	2850
Gasoline Product	2428
Process Gas Product	20000 SCFH
Hydrogen Product	159000 SCFH

d. Unicracker

The Unicracker is a key process unit. It is based on UOP Unicracker technology[10]. The Unicracker is a type of hydrocracker developed by UOP. The Unicracker developed for this process serves to remove sulfur, convert waxy long chain paraffins to shorter branched paraffins and also crack high molecular weight hydrocarbons into gasoline and distillate range compounds. The process uses hydrogen, pressure, and fixed bed catalysts. The process is similar to the hydrodesulfurization process except that the catalysts are different and the conditions are more severe.

The feed to the Unicracker is the diesel and heavier bottoms from the crude unit. The feed has a sulfur content of 0.30wt%. Approximately 60% is heavier than diesel fuel, and the heavier fractions are also waxy.

The process unit was designed around a single, four-staged reactor because of the low feed rate compared with traditional units at larger refineries. The catalysts for each stage were selected to optimize performance and to achieve the desired conversion.

The Unicraker process flow diagram is Figure 4.2.5. The bottoms from the crude unit are mixed with the recycle oil and pumped with the feed pump, P-401, to the reactor pressure of approximately 1800 psig. The combined liquid feed is mixed with the recycle gas. It is warmed by heat exchanger in the feed/effluent exchanger, E-401. The combined feed is heated to the reactor temperature of about 700°F, in the reactor charge heater, H-401. The reactor charge flows through the four fixed bed sections of the reactor, R-401. Additional recycle hydrogen is added between sections.

The reactor effluent is cooled in E-401 and then most of the hydrogen is removed in the hot separator, V-401. The hydrogen rich stream is cooled in the recycle gas cooler, E-402, and entrained hydrocarbons are removed in the cold separator, D-401. The separated liquid from V-401 is flashed through a pressure reducing valve to the hot flash drum, V-402. The vapor from V-402 is condensed in E-403 and flashed again into the cold flash drum, D-402.

FIGURE 4.2.5: UNICRACKER PROCESS FLOW DIAGRAM

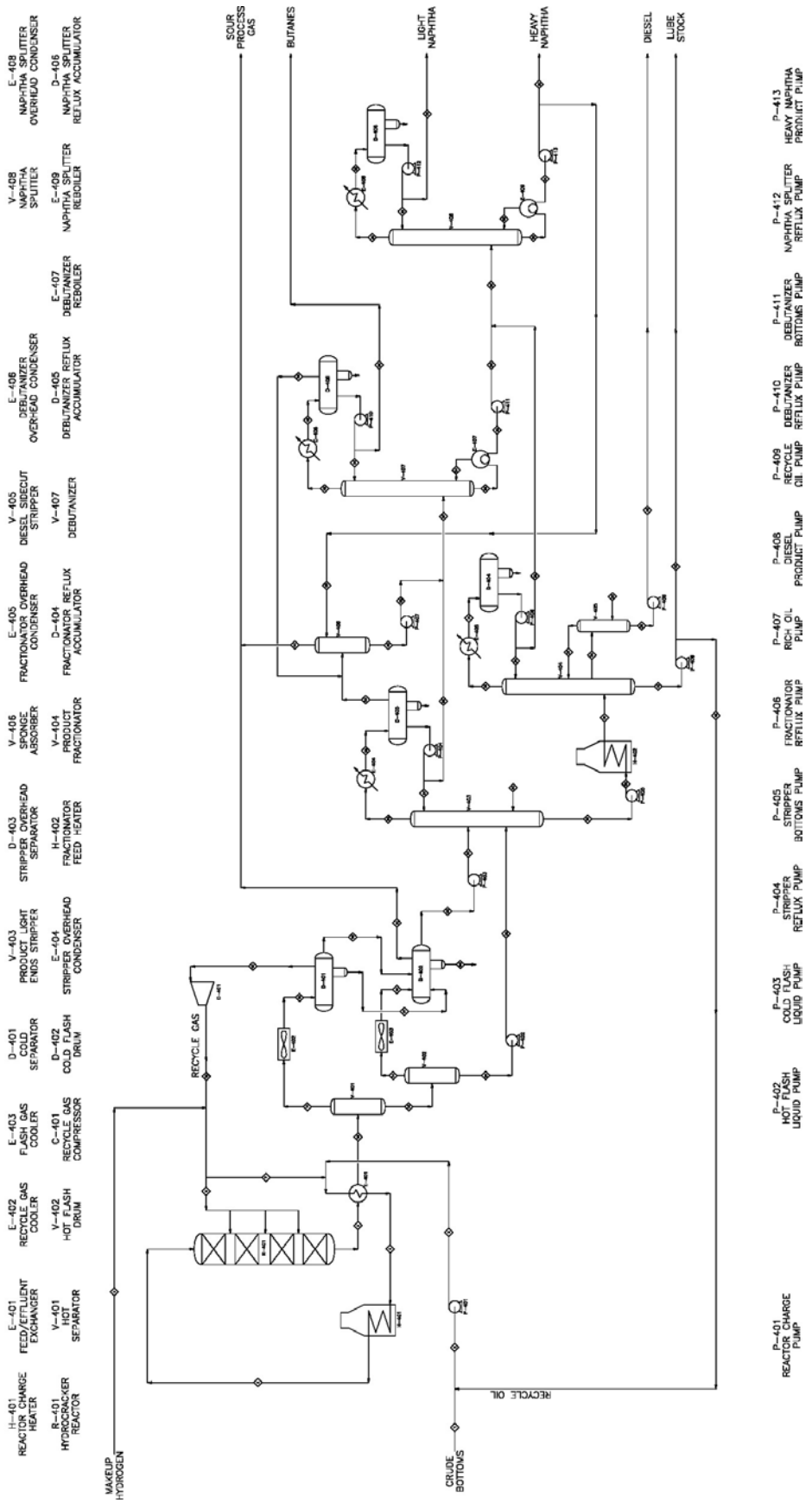

Liquid from D-401 is also flashed into D-402. The non-condensable vapor from D-402 is part of the sour gas byproduct from the process.

The separated liquids from V-402 and D-402 are introduced at different levels into the product light ends stripper, V-403. The light ends stripper is a steam stripper column which separates the light and heavy fractions of the reactor product. The light fraction contains sour process gas and light and heavy naphtha. The heavy fraction contains heavy naphtha, distillate, and heavier oils.

The overhead vapor from V-403 is condensed in E-404. The non-condensable vapor is removed in the stripper overhead separator, D-403. The vapor is fed to the sponge absorber, V-406, which removes entrained liquids from the sour process gas product. The condensed liquids are returned to the column as reflux. Excess condensed product is fed to the debutanizer column, V-407. The debutanizer removes butanes from the naphtha as an overhead product. The butanes can be isolated as an individual product or blended with the process gas. The naphtha is recovered from V-407 as the bottoms product.

The heavy liquid fraction recovered from the bottom of V-403 is heated in the fractionator feed heater, H-402. The heavy liquid is fed to the product fractionator column, V-404. The product fractionator separates the naphtha, diesel, and heavy oil products. The naphtha is removed as the overhead product. The naphtha is blended with the naphtha recovered from V-407. The diesel is recovered as a side product from V-404. A side stripper, V-405, refines the diesel product. The heavy oil bottoms from V-404 is recycled to the reactor. Excess heavy oil makes the lube stock product from the process.

The stabilized naphtha recovered from V-404 and V-407 are blended together. This stream can be pumped out of the process as a single naphtha product or it can be separated into light and heavy naphtha to allow custom gasoline blending with other streams in the refinery. The stabilized naphtha is fed to the naphtha splitter column, V-408, for separation. The splitter is a traditional distillation column with reboiler and condenser. The light naphtha is removed as the overhead product. The heavy naphtha is removed as the bottoms product.

Table 4.2.3 summarizes the product yields from the Unicracker. The products include sour process gas, light naphtha, heavy naphtha, diesel, and lube stock.

Table 4.2.3: Unicracker Yield Summary	
	Bbl/dy
Hydrocracker Feed	2350
Hydrogen Consumption	117500 SCFH
Fuel Gas	4643 SCFH
Butanes	90
Light Naphtha	200
Heavy Naphtha	509
Diesel	1877
Residual Oil/Lube Stock	12

e. Hydrogen Purification Unit

The Hydrogen Purification Unit is a pressure swing adsorption (PSA) unit which is used to purify the excess hydrogen produced in the reformer to the purity required by the Unicracker. The PSA Unit is a common component of a hydrogen production unit where it is used to remove CO and CO_2 byproducts, N_2 and unreacted CH_4 from the hydrogen product. In this process, it is used to remove the light hydrocarbons from the reformer hydrogen product.

The process flow diagram for the Hydrogen Purification Unit is shown in Figure 4.2.6. The PSA unit uses packed beds of an adsorbent which will preferentially adsorb the impurities while allowing the hydrogen to pass through. The compressed hydrogen product from the reformer is passed through the PSA bed. The impurities are adsorbed onto the bed. Then purified hydrogen is recompressed in the product compressor.

Four adsorbent beds are operated in sequence. One is in operation while three are in some stage of regeneration. The beds are regenerated by isolating and reducing the pressure. At the reduced pressure, the impurities desorb and the resulting gas is routed to the process gas system. The PSA process produces 99.9% pure hydrogen from the reformer hydrogen product.

f. Sulfur Recovery Unit

The sulfur recovery unit removes hydrogen sulfide, H_2S, from the process gas produced by various sources in the refinery. The separated H_2S is then converted to elemental sulfur in a liquid redox process. This refinery produces about 1.5 tons of sulfur per day. Operations producing less than one ton per day can efficiently use sulfur sequestration as an alternative. Operations producing 10 tons per day or more can efficiently install a Claus Sulfur Recovery Plant. The liquid redox sulfur recovery processes are the least desirable sulfur recovery processes, but they are the only practical processes for sulfur production rates in the range of this refinery.

FIGURE 4.2.6: HYDROGEN PURIFICATION UNIT PROCESS FLOW DIAGRAM

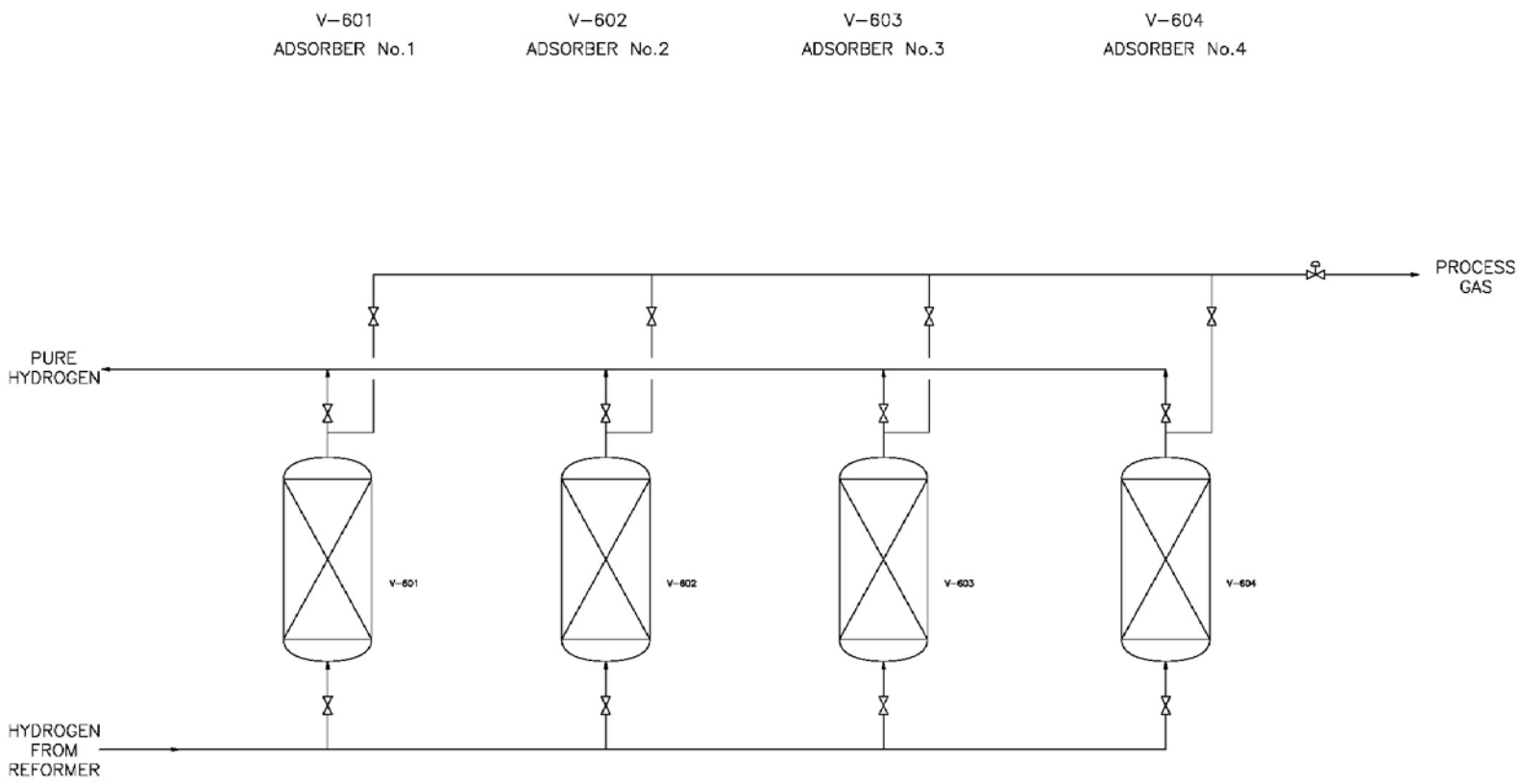

The process flow diagram for the sulfur recovery unit is shown in Figure 4.2.7. The sulfur recovery unit has two processes: separation of H_2S from the process gas and conversion of the H_2S to sulfur. The separation of the H_2S is accomplished in an absorber-stripper unit. The incoming process gas is contacted with a liquid absorbent solution in the Acid Gas Absorber, V-501. The lean liquid absorbent solution is introduced to the top of the absorber column. It absorbs H_2S as it passes down through the absorber. The clean process gas exits the top of the absorber and is stored for use as fuel throughout the refinery. The rich liquid absorbent solution exits the bottom of the absorber column.

The H_2S is removed from the rich solution in a stripper column, V-502. The rich solution from the absorber is warmed with heat exchange in E-501 and introduced to the stripper column through a pressure reducing valve. The stripper column is a reboiled stripper. Heat is added to the bottom of the column from a reboiler, E-504. The H_2S is essentially boiled out of the rich solution. The H_2S rich vapor exits the top of the column. The absorbent solution is condensed and returned to the column as reflux. The H_2S gas is separated for sulfur recovery. The lean (H_2S free) solution is pumped from the bottom of the stripper tower. It is cooled by heat exchange with the incoming rich solution in E-501 and further cooled in E-502 before it is introduced back to the absorber column.

The H_2S gas is routed to the conversion unit. The incoming H_2S gas stream is warmed with heat exchange with the recycle H_2S gas stream in E-505. The H_2S gas enters the reactor where it is reacted with an aqueous, buffered SO_2 solution. In a series of liquid and gas phase reactions, the H_2S and SO_2 react to form elemental sulfur and water. Elemental sulfur is removed from the bottom of the reactor as a solid product. The recirculating solution is removed from the reactor to the byproduct crystallizer. The byproduct crystallizer removes byproduct sulfur salts which have formed as a result of reactions with the buffering agents. The SO_2 lean solution is introduced to the top of the SO_2 absorber, V-503. Unreacted H_2S gas from the reactor is routed through the SO_2 generator furnace where it is combusted with air to form SO_2. The SO_2 is introduced to the bottom of the SO_2 absorber. The aqueous solution absorbs the SO_2 as it passes though the absorber. The SO_2 rich solution is removed from the bottom of the absorber and returned to the reactor. Excess air and nitrogen and unabsorbed SO_2 are vented from the top of the absorber column. The SO_2 exhaust concentration is monitored to insure compliance with operating limits.

FIGURE 4.2.7: SULFUR RECOVERY UNIT PROCESS FLOW DIAGRAM

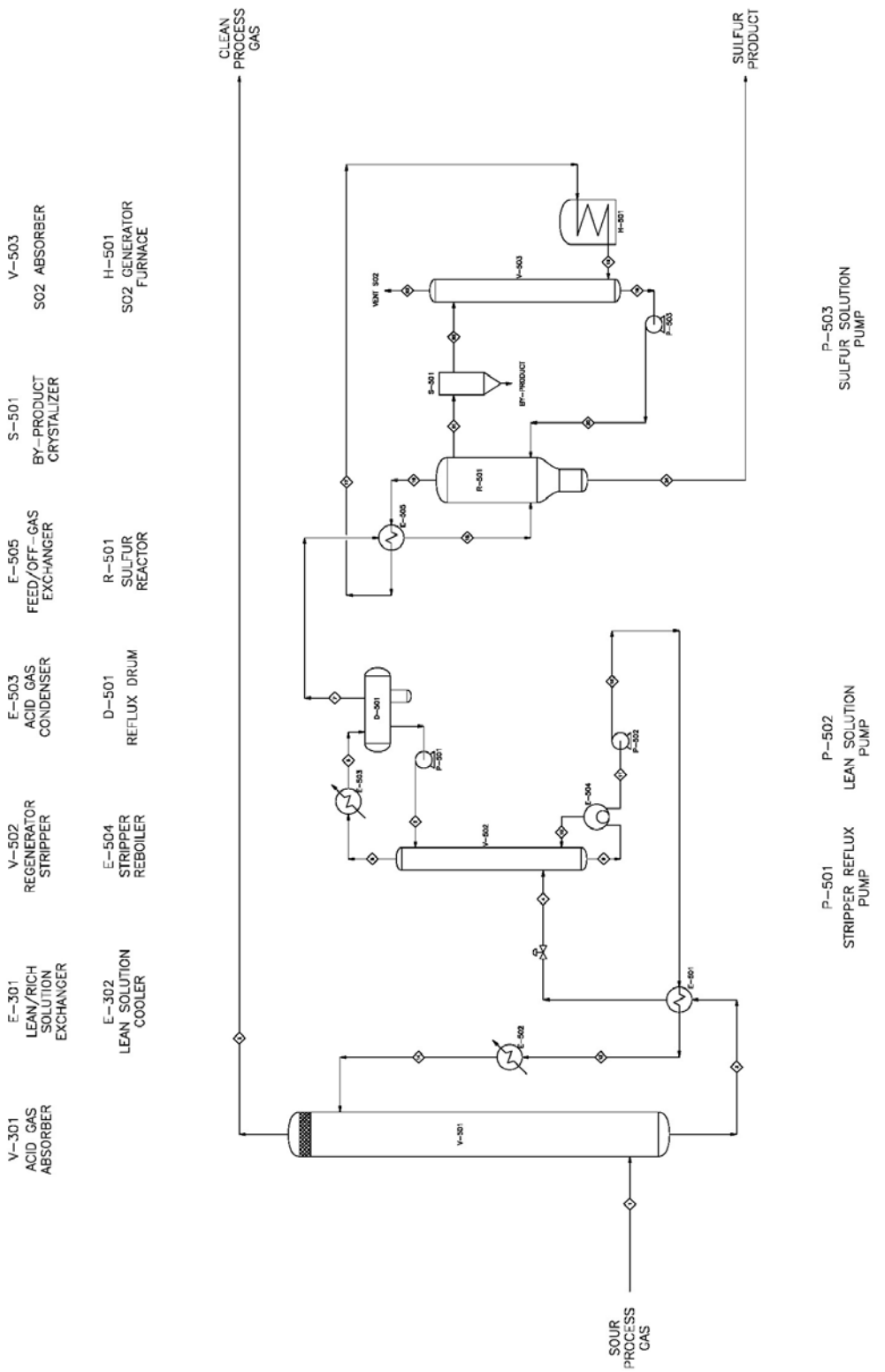

g. Utilities

The utilities haven't been diagrammed, but they include: steam boilers, a heat transfer fluid heating system, a cooling water system, a boiler feed water pretreatment system, a potable water treatment system, an oil-water separator system, and a final waste water treatment system. There is also a flare system for recovery and safe combustion of vapors and gases vented from the refinery.

The refinery will have additional facilities for power distribution, emergency power generation, and fire protection. The facility will have a tank farm for storage of crude oil and products. There will be bulk truck unloading and loading racks. There will also be administrative, training, maintenance, and health and safety facilities.

4.2.5 Site Plan

The refinery site was selected by the Jicarilla Apache Tribe. It is in an area designated for development. The site is near the northwest corner of the intersection of the main highway between Albuquerque and Farmington (US 550) and the main north-south highway through the reservation (SR 537). The site allows easy access to the Farmington and Albuquerque markets. As discussed in the Analytical Report, the site is close to the targeted crude oil production area.

A preliminary site plan has been developed. It is shown in Figure 4.2.8. The site is located along US 550 about a mile west of the intersection with SR 537. The truck unloading and loading racks are located along the frontage of the highway allowing for easy on and off access. The electrical distribution equipment and standby generators are located at the southeast corner of the site to minimize the runs of high voltage cables. The electrical supply power lines run along US 550 also. The administrative offices, health & safety office, fire department, and warehouse are located along the facility fence line with access from inside and outside the plant.

The main entrance to the refinery is adjacent to the administrative office. A guard shack is located at the gate. A change room is located inside the refinery past the guard shack. The change room allows employees to keep uniforms and safety equipment at the plant to prevent loss. The control room and laboratory are located adjacent to the process area.

The process units are arranged in the center of the refinery. The products from each unit can flow to the next unit or to intermediate storage tanks on the tank farm depending on process requirements. The tank farm is located east of the process area. There are three 20,000 barrel crude oil tanks and one 40,000 barrel crude oil tank. There are two 25,000 barrel gasoline storage tanks. There are two 20,000 barrel diesel fuel storage tanks. There is a 25,000 barrel jet fuel storage tank, and there is a 15,000 barrel jet fuel storage tank. There are small tanks for blend stocks and intermediate products. Outside the tank farm there is a process gas holding vessel.

FIGURE 8: SITE PLAN

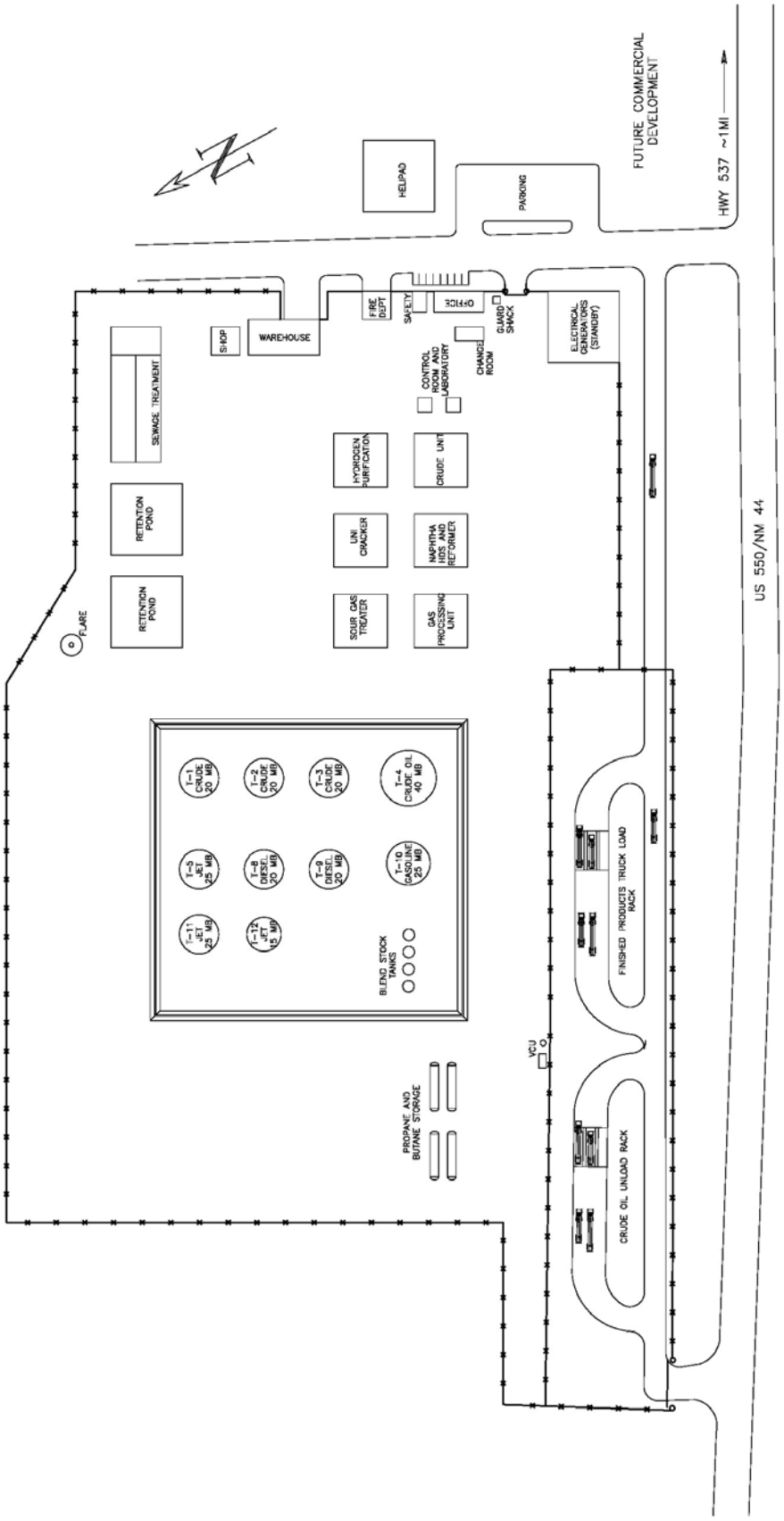

The water treatment units and retention ponds are located in the northeast corner of the site.

4.2.6 Product Slate

The product slate is the array types and quantities of products produced by the refinery. The product slate is summarized in Table 4.2.4.

Table 4.2.4: Product Slate	
	Bbl/dy
Gasoline	3600
Kerosene	470
Diesel	1900
Oil	12

4.2.7 Cost Estimates

The cost estimates were derived based on the process design, engineering cost estimating guides, information and budget quotations from vendors, and the experience of John D. Jones Engineering and the Jicarilla Apache Energy Corporation. The capital costs include the installed costs of the process units and the cost of the facility development and infrastructure. The operating costs include the cost of utilities, labor, and royalties.

The process unit capital costs are summarized in Table 4.2.5. The crude unit cost was estimated based on similar refinery process units recently installed. The costs for the Naphtha HDS Unit, the Reformer, the Unicracker, and the sulfur recovery unit were based on vendor supplied budget cost estimates.

The costs for site facilites where approximated based on similar facilities. These estimates are itemized in Table 6. The total capital cost is presented in Table 7. The additional infrastructure is for catalyst and start-up supplies and assistance. The working capital is based on 30 days of operating costs and crude oil feed supply.

Table 4.2.5: Process Unit Capital Costs	
Process Unit	Estimated Cost
Crude Unit	6,482,000
Naphtha HDS	5,100,000
Reformer	14,700,000
Unicracker	13,800,000
Sour Gas/Sulfur Treating	1,700,000
Other Infrastructure	1,603,000

Table 4.2.6: Site Facilities Estimated Costs	
Tanks	
T-1	450,000
T-2	450,000
T-3	450,000
T-4	810,000
T-5	450,000
T-6	450,000
T-7	450,000
T-8	360,000
T-9	360,000
T-10	540,000
T-11	450,000
T-12	270,000
T-13	67,500
T-14	67,500
T-15	67,500
T-16	67,500
T-17	67,500
T-18	67,500
T-19	67,500
T-20	67,500
Dike	150,000
LPG Bullet	90,000
Fence	70,875
Load Rack	450,000
Unload Rack	350,000
Generator	1,500,000
SES/MCC	1,500,000
Flare System	250,000
Sewage Treatment	1,500,000
Fresh/Boiler Water treatment	250,000
Wells	625,000
Admin Office	90,000
Safety Office	105,000
Lab	270,000
Control Room	111,250
Change Room	30,000
Fire Dept	210,000
Shop	270,000
Warehouse	250,000
Spare Parts & Supplies	2,500,000
Paving	1,750,000
Fire Pump & Mains	1,500,000
Oily Water Treatment	350,000
Piping	1,500,000
Vehicles	122,000
Total	21,824,000

Table 4.2.7: Capital Cost Estimate		
Engineering	$	5,266,800
Site Facilities		21,824,000
Process Units		
Crude Unit		6,482,000
Naphtha HDS		5,100,000
Reformer		14,700,000
Unicracker		13,800,000
Sour Gas/Sulfur Treating		1,700,000
Other Infrastructure		1,603,000
Contingency		10,571,370
Total Fixed Capital Cost		**81,047,170**
Working Capital		**5,662,333**
Total Project Capital	**$**	**86,709,503**

The operating cost is presented in Table 8. The cost is presented as a daily operating cost. Annual costs are based on a 345 day operating year.

Table 4.2.8: Daily Operating Costs		
Natural Gas	$	12,254
Electricity		2,179
Water		170
Chemicals		7,144
Royalties		375
Labor		7,870
Maintenance Supplies		800
Total	**$**	**30,792**

4.3 Economic Analysis of a Proposed Petroleum Refinery

4.3.1 Introduction

This report is of the economic analysis of the feasibility of an oil refinery for the Jicarilla Apache Indian Reservation. The economic analysis will be a basic relation of potential revenues to capital and operating costs. A pre-tax return on investment will be generated.

4.3.2 Basis

The primary basis for this analysis is the information developed in the report sections: "Survey and Characterization of Crude Oils" and "Preliminary Engineering and Process Design". The first report section established the production volume and quality of crude oil available to the proposed refinery. The second report section determined the process and equipment necessary to successfully process the available crude oil and also determine the quantity and quality of products produced.

To determine costs for raw materials and products several sources of data were used. The primary basis for the crude oil cost was the published crude price posting data for the Giant Industries' Refinery in Bloomfield, New Mexico. This is the closest refinery to the site and is representative of the price paid for crude oil produced in the area. To simulate a competitive market, the cost for transportation of the crude to another market, the cost for importation of crude from another source, and the published refining margin for the Bloomfield refinery were compared.

Price data for the products produced were obtained from the Oil Price Information Service (OPIS). Data was averaged from the markets nearest the proposed site. The annual average data for the Albuquerque, Bloomfield, and Cineza, New Mexico were used.

4.3.3 Capital Cost

The capital cost was determined based on the preliminary engineering. The capital cost was detailed in the preliminary engineering report. Table 4.3.1 summarizes the capital cost.

Table 4.3.1: Capital Cost Estimate	
Engineering	$ 5,266,800
Site Facilities	21,824,000
Process Units	-
Crude Unit	6,482,000
Naphtha HDS	5,100,000
Reformer	14,700,000
Unicracker	13,800,000
Sour Gas/Sulfur Treating	1,700,000
Other Infrastructure	1,603,000
Contingency	10,571,370
Total Fixed Capital Cost	**81,047,170**
Working Capital	**5,662,333**
Total Project Capital	**$ 86,709,503**

4.3.4 Crude Oil Cost

The crude oil feed to the refinery is based on a design rate of 6,000 barrels per day. Two cases were examined for the cost of the crude oil feed stock. The first basis was the crude oil price postings for the Giant Industries refinery in Bloomfield, New Mexico. The monthly average postings for the Giant refinery are presented in Table 4.3.2.

Table 4.3.2: Giant 2003 Monthly Average Crude Posting $/bbl	
Month	**Average**
January	27.9435
February	30.7768
March	28.6694
April	23.7000
May	23.2581
June	25.6917
July	26.0161
August	26.8871
September	23.6750
October	25.7500
November	26.1250
December	27.4113
Average	**26.3253**

Once a second refinery is operating in the area, crude oil prices can be expected to increase. To simulate the competitive market, an adder for the posted crude price was developed. If there is insufficient crude oil supply available, the primary option will be to import crude from another market. An alternative to processing crude or importing crude is to not process and export the crude to another market. The nearest available crude supplies which might be available competitively are about 600 miles away. The nearest alternative market for crude oil processing is also about 600 miles away, but in another direction. The alternatives for transportation result in a 1200 mile round trip for either case. At a transportation cost of approximately $0.90 per mile, the competitive adder would be $6.48 per barrel of crude oil. The Giant Industries annual report for recent years indicated a refining margin, the difference between the value of products and cost of crude, of about $6.00 to $6.50 per barrel for the Bloomfield refinery. Table 4.3.3 summarizes the difference between the base case and the competitive case for crude oil costs.

Table 4.3.3: Crude Oil Cost

	Giant Posting Basis	Competitive Posting Basis
Base Crude $/bbl	26.33	26.33
Competitive $/bbl	-	6.48
Crude Cost $/bbl	26.33	32.81
Cost per Day $/dy	157,952.00	196,832.00

4.3.5 Operating Cost

The operating cost was determined based on the process design and preliminary engineering. The operating cost was detailed in the engineering report. The operating cost is summarized in Table 4.3.4.

Table 4.3.4: Daily Operating Costs

Natural Gas	$ 12,254
Electricity	2,179
Water	170
Chemicals	7,144
Royalties	375
Labor	7,870
Maintenance Supplies	800
Total	**$ 30,792**

4.3.6 **Revenues**

The revenues are estimated based on the product slate and the local average rack prices for the products. The product slate is the type and quantity of products produced by the refinery. The product slate was determined based on the process design and preliminary engineering. The product slate is summarized in Table 4.3.5.

Table 4.3.5: Product Slate	
	Bbl/dy
Gasoline	3600
Kerosene/Jet Fuel	470
Diesel	1900
Oil	12

The values for each of the products were determined as an average of the rack prices for the local markets nearest the site. The rack price averages were obtained from the Oil Price Information Service, an independent commercial service which is a clearinghouse for petroleum product prices nationwide. The OPIS rack price data is summarized in Table 4.3.6.

Table 4.3.6: Rack Prices ¢/gal. (OPIS Avg. 2003)			
Rack	Gasoline	Kerosene	Diesel
Albuquerque	99.53	107.36	94.11
Bloomfield	102.96	107.32	93.94
Ciniza	107.40	110.30	96.29
Average	103.30	108.33	94.78

The average value of the product slate is presented in Table 4.3.7.

Table 4.3.7: Value of Product Slate, $/day				
	Bbl/dy	Gal/dy	$/Gal	$/dy
Gasoline	3600	151200	1.03	156,184
Kerosene	470	19740	1.08	21,384
Diesel	1900	79800	0.95	75,633
Oil	12	493.5	0.71	351
Total				**$253,552**

4.3.7 Return on Investment

The return on investment for the base case and for the competitive case are presented in Table 4.3.8 and Table 4.3.9. The return on investment is based on 345 operating days per year. The capital is depreciated straight-line over a 16 year life span. The return is estimated pre-tax.

Table 4.3.8: Return on Investment Giant Posting Case	
Capital Investment	86,709,503
Value of Product Slate	87,475,343
Cost of Crude Oil Feed	(54,493,440)
Operating Expense	(10,623,391)
Depreciation	(5,065,448)
Net Profit	17,293,064
Return on Investment	20%

Table 4.3.9: Return on Investment Competitive Posting Case	
Capital Investment	86,709,503
Value of Product Slate	87,475,343
Cost of Crude Oil Feed	(67,907,040)
Operating Expense	(10,623,391)
Depreciation	(5,065,448)
Net Profit	3,879,464
Return on Investment	4%

An additional consideration for the competitive posting case is the increased tribal revenue from the increased crude price. There is about 1900 barrels per day of crude oil production within the reservation boundaries. About 20 barrels per day is owned directly by JAECO. The remaining 1880 barrels per day are produced by license holders who pay a royalty to the tribe as a percentage of the produced revenue. Given a $6.48 per barrel increase in the price of crude, Table 4.3.10 summarizes the increased benefit to the tribe.

Table 4.3.10: Increase of Tribal Revenue From Competitive Case		
Production Volume	JAECO	Tribal Royalty
BPD	20	1,880
Increased Value $/Bbl	6.48	0.87
Increased Value $/Yr	44,712	567,395

4.3.8 Auxiliary Opportunities

In addition to the monetary value of the investment in the proposed refinery the project also has numerous auxiliary opportunities and benefits. The infrastructure of the refinery – water treatment and distribution, wastewater treatment, power distribution, and fire protection facilities – can easily be expanded and integrated with associated residential, commercial, and industrial development. The increased traffic from the facility alone will support commercial development in the area.

The economic analysis has been prepared based on spot market wholesale pricing. The control of the refinery will also create opportunities for the creation of a retail brand. Experience with the refinery processes can enable opportunities for related branded petroleum products.

The facility will produce a mostly high octane gasoline product. This may be an attractive blend stock for other nearby tribes which operate transmix distillation units and have a need for high octane blend stock.

5.0 Conclusion

This study has produced a survey of the crude oil production in the vicinity of the Jicarilla Apache Indian Reservation. It has identified the production zones/geologic formations that define the types of crude oils available. The production has been quantified and a representative composite crude oil feed stock has been identified as the potential feed to a proposed crude oil refinery for the Tribe. There is currently 6,000 barrels per day of production available in the vicinity of the Reservation.

The available crude oil types have been sampled and analyzed to determine the properties which define the refinery design and the feasibility of processing this crude oil. The representative crude oil is light and sweet and is suitable for processing in a small, hydroskimming refinery with some innovative processes.

A process design has been proposed which utilizes a smaller, lower temperature crude fractionation unit, a naphtha HDS/reformer to produce high octane gasoline, and a specialized Unicracker to produce ultra low sulfur diesel fuel. The proposed refinery has been estimated to cost $86,700,000. More than half of this cost is associated with infrastructure and environmental compliance. This infrastructure can be easily expanded to serve additional residential, commercial, and industrial development.

The economics of the proposed refinery were evaluated using 2002 production data and 2003 price data. The estimated return on investment based on these conditions in the existing market is 20%. This return compares well with other petroleum industry projects and it is likely that the project can attract investment.

There is an existing refinery in the region. Within a tight crude oil supply market, this project demonstrates the ability to maintain a profitable return beyond the point where the nearest competitor would operate at a loss. Additionally, it has been demonstrated that a competitive supply market is beneficial to the tribe which is a producer.

Crude oil prices are currently rising sharply and there is action underway to increase crude oil production and tap additional reserves in the vicinity. Increased production will not only insure the long term profitability of this project, it may also support an increased feed rate for a minimal incremental project cost increase. Expansion of this project, if possible, will have a significant positive impact on the profitability.

This study has given the Tribe valuable knowledge of the quality of the crude they produce, its suitability for processing, and the ultimate value of the products produced. It is presumed that other Tribes and Native American Corporations could also benefit from this type of knowledge. Tribes are ultimately responsible for the oil reserves and production on their lands. Studying the quality of these reserves and the requirements for processing them will give them additional tools to manage their reserves and maximize their value.

6.0 References

1. a) Department of Transportation Federal Highway Administration Central Federal Lands Highway Division HPD-16 January 28, 1999

   b) "San Juan Basin Oil Field Map Book", Greater Minds Public Land Survey, Copyright 2002

2. Preliminary Siting Study for a New Town in Southern Part of the Jicarilla Apache Reservation. Resource Technology Incorporated September 25, 1983.

3. Petroleum Information/Dwights LLC d/b/a IHS Energy Group (Copyright 2003)

4. Ibid. Productions Rates Gas/Oil/Water

5. Falkner Laboratories, Inc., 1039 Pearl Drive, P.O. Box 5438, Bossier City, LA 71111

6. Core Laboratories, 8210 Mosley Rd., Houston, Texas 77075

7. U.O.P. Unicracking Unit, John Gugel, March 22, 2004. U.O.P. Platforming Process and U.O.P. Unicracking Process, Jicarilla apache Energy Corporation, New Mexico, U.S.A. October 21, 2003

8. JAECO Crude Unit Hyprotech's Process Simulator

9. U.O.P. Estimate For Reforming Unit (this also includes the naphtha hydrotreating unit. John Gugel, March 22, 2004

10. Jicarilla Apache Energy Corporation. U.O.P. Platforing Process and U.O.P. Unicracking Process, New Mexico, U.S.A. October 21, 2003

11. Crude Price Quotation for the Giant Industries Refinery, Giant Refining Company, Raw Material Supply Department, 23733 North Scottsdale Road, Scottsdale, AZ 85255

12. Oil Price Information Services (OPIS), 1130 Rockville Pike, Suite 1100, Rockville, MD 20852-3030

13. JAECO Owned Production

    a. Jesse Evans, CEO/President, Jicarilla Apache Energy Corporation (JAECO), P.O. Box 710, Dulce, NM 875298

    b. Petroleum Information/Dwights LLC, Copyright 2003, Accumulative Data From 2003

Attachments

Attachment 1: Analytical Data

Attachment 2: Process Design Data

FALKNER RED-RIVER LABORATORIES, INC.

1039 PEARL DRIVE·P.O. BOX 5438
BOSSIER CITY, LA 71111
PHONE: 318-746-2404·FAX: 318-742-1448

LAB REPORT #: 4-142681

REPORT DATE: [redacted]

SUPPLIER: John D. Jones Engineering

PAGE 1 OF 2

REQUESTED BY: John D. Jones

DATE RECEIVED: [redacted]

Preliminary Report

Product	Crude	Crude	Crude	Crude
Grade	Jicarilla 96	Jicarilla 99	Jicarilla 99	Chacra Jicarilla
Tank #	No2C	Well #15	Well #16	DNo 17
Sample #	Sample #1	Sample #3	Sample #5	Sample #7
Date Shipped	1-6-03	1-6-03	1-6-03	1-6-03
Gravity	60.3	34.9	43.9	55.2
I.B.P.	95	200	98	126
5% Recovered At	145	270	170	190
10% "	168	310	196	210
20%	191	369	237	227
30%	216	409	271	246
40%	228	455	322	257
50%	237	505	386	270
60%	275	563	487	285
70%	280		598	306
80%	205		666	335
90%	341			410
95%	420			650
End Point	428	703 (cracked)	706 (cracked)	674
Recovery	97.0	69.0	74.0	96.0
Residue	1.0	30.0	24.0	3.0
Loss	2.0	1.0	2.0	1.0
Specific Gravity	.7377	.8504	.8067	.7551
RVP	9.6	2.1	6.4	6.1
Pour Point	Below -55°F	+28°F	-30°F	Below -50°F
Sulfur, wt%	.03	.06	.11	.02
Flash, °F				
Salt content	.07 lbs/Mbbl	.14 lbs/Mbbl	.14 lbs/Mbbl	.14 lbs/Mbbl
Nitrogen				
	MESAVERDE	~~PICTURED CLIFFS~~	GALLUP	DAKOTA/GALLUP (MIX)
		WAX	WAX	WAX

REMARKS:

A: The results of this test relate only to the items tested.

B: This report will not be reproduced except in full, without the written approval of the laboratory.

Jet Fuel 170 - 563

John D Falkner
FOR FALKNER RED RIVER LABORATORIES, INC

☐ ~~Jet Fuel~~ Gasoline 95 - 409

☐ #2 Diesel 409 - 598

FALKNER RED-RIVER LABORATORIES, INC.

1039 PEARL DRIVE·P.O. BOX 5438
BOSSIER CITY, LA 71111
PHONE: 318-746-2404·FAX: 318-742-1448

LAB REPORT #:
4-142681

REPORT DATE:
[redacted]

SUPPLIER:
John D. Jones Engineering

PAGE 1 OF 2

REQUESTED BY:
John D. Jones

DATE RECEIVED:
January 6, 2003

Preliminary Report 50°F

Product	Crude	Crude	Crude	Crude
Grade	Jicarilla 96	Jicarilla 99	Jicarilla 99	Chacra Jicarilla
Tank #	No2C	Well #15	Well #16	DNo 17
Sample #	Sample #1	Sample # 3	Sample #5	Sample #7
Date Shipped	1-6-03	1-6-03	1-6-03	1-6-03
Gravity	60.3	34.9	43.9	55.2
I.B.P.	95	200	98	126
5% Recovered At	145	270	179	190
10% "	168	310	198	210
20%	191	369	237	227
30%	216	409	271	246
40%	228	455	322	257
50%	237	505	386	270
60%	275	563	497	285
70%	280		598	306
80%	295		666	335
90%	341			433
95%	420			650
End Point	478	703 (cracked)	706 (cracked)	674
Recovery	97.0	69.0	74.0	96.0
Residue	1.0	30.0	24.0	3.0
Loss	2.0	1.0	2.0	1.0
Specific Gravity	.7377	.8504	.8067	.7551
RVP	9.6	2.1	6.4	6.1
Pour Point	Below -55°F	+28°F	-30°F	Below -50°F
Sulfur, wt%	.03	.06	.11	.02
Flash, °F				
Salt content	.07 lbs/Mbbl	[illegible] lbs/Mbbl	.14 lbs/Mbbl	.14 lbs/Mbbl
Nitrogen				
	MESAVERDE	PICTURED CLIFFS	GALLUP	DAKOTA/GALLUP (Mc)
		WAX	WAX	WAX

Use this graphical data for relative comparison.

REMARKS:

A: The results of this test relate only to the items tested.

B: This report will not be reproduced except in full, without the written approval of the laboratory.

John D Falkner

FOR FALKNER RED RIVER LABORATORIES, INC

FALKNER RED-RIVER LABORATORIES, INC.

1039 PEARL DRIVE·P.O. BOX 5438
BOSSIER CITY, LA 71111
PHONE: 318-746-2404 FAX: 318-742-1448

DAKOTA GALLUP MIX

LAB REPORT #: 4-142681 (Majority Dakota)

REPORT DATE: February 27, 2003

PAGE 1 OF 2

SUPPLIER: John D. Jones Engineering

REQUESTED BY: John D. Jones

DATE RECEIVED: January 6, 2003

SAMPLE #7

Sample #	Crude #	Crude #	Crude #	Crude #	Crude #	Crude #
Grade	IBP-200	200-300	300-350	350-500	500-650	650-1025
Gravity		58.0	49.8	45.0		
I.B.P.	82	186	290	355		
5% Recovered At	---	214	297	364		
10% "	110	220	300	367		
20%	123	230	304	372		
30%	135	235	307	376		
40%	143	239	310	383		
50%	154	243	312	391		
60%	164	247	315	398		
70%	174	254	318	408		
80%	189	262	324	420		
90%	233	272	332	440		
95%	---	281	340	460		
End Point	271	322	371	520		
Recovery	97.0	98.0	98.0			
Residue	.5	1.0	1.0			
Loss	2.5	1.0	1.0			
Specific Gravity	---	.7467	.7805	.8017		
Sulfur, wt%	.006	.014	<.001	.004		
Pour Point						
Flash Point						
Aromatics			19.93	17.57		
Olefins			0.88	0.88		
Saturate			79.19	81.55		
Nitrogen						
Gross Heat of Combustion			19839			
US Cetane Index				43.4		
Yield L.V. %						
Yield wt %						
Smoke point						
Cloud Point						
H2S						
RSH						
Viscosity @100°						
Viscosity @210°						

REMARKS: Work stopped on this sample per John D. Jones

A: The results of this test relate only to the items tested.
B: This report will not be reproduced except in full, without the written approval of the laboratory.

Richard L. Moulton
FOR FALKNER RED RIVER LABORATORIES, INC

Stopped Testing

8210 Mosley Rd.
Houston, TX 77075
713 943-9776 Telephone
713 943-3846 Facsimile

CORE LABORATORIES

Bromine Indep

Date Reported: 6/10/03
Date Received: 6/9/03

JOHN I FALKNER
FALKNER-RED RIVER LABS

1039 PEARL DRIVE
BOSSIER CITY, LA 71111

Analytical Report

Test	Result	Units	Method	Date	Analyst
Sample Number: 132369-001 Sample Date:	Sample ID: Sample 5 Bottoms Description:				Sample Rcvd: 6/9/03
Bromine Number	2.2	g/100g	ASTM D-1159	6/10/03	CB
Sample Number: 132369-002 Sample Date:	Sample ID: Sample 12 Bottoms Description:				Sample Rcvd: 6/9/03
Bromine Number	8.7	g/100g	ASTM D-1159	6/10/03	CB
Sample Number: 132369-003 Sample Date:	Sample ID: Sample 14 Bottoms Description:				Sample Rcvd: 6/9/03
Bromine Number	7.7	g/100g	ASTM D-1159	6/10/03	CB

Approved By: Pat Gideons
Laboratory Supervisor

The analytical results, opinions or interpretations contained in this report are based upon information and material supplied by the client for whose exclusive and confidential use this report has been made. The analytical results, opinions or interpretations expressed represent the best judgment of Core Laboratories. Core Laboratories, however, makes no warranty or representation, express or implied, of any kind, and expressly disclaims liability as to the productivity, proper operations or profitableness of any oil, gas, coal, or other mineral, property, well or sand in connection with which such report is used or relied upon for any reason whatsoever. This report shall not be reproduced, in whole or in part, without the written approval of Core Laboratories.

FALKNER RED-RIVER LABORATORIES, INC.

1039 PEARL DRIVE·P.O. BOX 5438
BOSSIER CITY, LA 71111
PHONE: 318-746-2404·FAX: 318-742-1448

LAB REPORT #:
4-142681

REPORT DATE:
January 28, 2003

SUPPLIER:
John D. Jones Engineering

PAGE 1 OF 2

REQUESTED BY:
John D. Jones

DATE RECEIVED:
January 6, 2003

Preliminary Report

Product	Crude	Crude	Crude	Crude
Grade	Jicarilla 96	Jicarilla 99	Jicarilla 99	Chacon Jicarilla
Tank #	No2C	Well #15	Well #16	DNo 17
Sample #	Sample #1	Sample # 3	Sample #5	Sample #7
Date Shipped	1-6-03	1-6-03	1-6-03	1-6-03
Gravity	60.3	34.9	43.9	55.2
I.B.P.	95	200	98	126
5% Recovered At	145	270	170	190
10% "	158	310	196	210
20%	191	369	237	227
30%	216	409	271	246
40%	228	455	322	257
50%	237	505	386	270
60%	275	563	487	285
70%	280		598	306
80%	295		666	335
90%	341			433
95%	420			650
End Point	478	703 (cracked)	706 (cracked)	674
Recovery	97.0	69.0	74.0	96.0
Residue	1.0	30.0	24.0	3.0
Loss	2.0	1.0	2.0	1.0
Specific Gravity	.7377	.8504	.8067	.7551
RVP	9.6	2.1	6.4	6.1
Pour Point	Below -55°F	+28°F	-30°F	Below -50°F
Sulfur, wt%	.03	.06	.11	.02
Flash, °F				
Salt content	.07 lbs/Mbbl	.14 lbs/Mbbl	.14 lbs/Mbbl	.14 lbs/Mbbl
Nitrogen				
		WAX	WAX	WAX

REMARKS:

A: The results of this test relate only to the items tested.

B: This report will not be reproduced except in full, without the written approval of the laboratory.

John D Falkner

FOR FALKNER RED RIVER LABORATORIES, INC

FALKNER RED-RIVER LABORATORIES, INC.

1039 PEARL DRIVE·P.O. BOX 5438
BOSSIER CITY, LA 71111
PHONE: 318-746-2404·FAX: 318-742-1448

LAB REPORT #: 4-142681

REPORT DATE: January 28, 2003

SUPPLIER: John D. Jones Engineering

PAGE 2 OF 2

REQUESTED BY: John D. Jones

DATE RECEIVED: January 6, 2003

Product	Condensate	Condensate		
Grade	Jicarilla 117E	Jicarilla 117E		
Tank #	No 2A	No 2A		
Sample #	~~Sample #9~~	Sample #10		
Date Shipped	1-6-03	1-6-03		
Gravity				
I.B.P.				
5% Recovered At	condensate			
10% "				
20%				
30%				
40%				
50%				
60%				
70%				
80%				
90%				
95%				
End Point				
Recovery				
Residue				
Loss				
Color				
RVP	16.1	13.7		
Motor				
Sulfur, wt%				
Flash, °F				
B.S.& W., Vol %				
Doctor				
Gum				

REMARKS:

A: The results of this test relate only to the items tested.

B: This report will not be reproduced except in full, without the written approval of the laboratory.

Richard L. Moore

FOR FALKNER RED RIVER LABORATORIES, INC

FAX

Falkner Red River Laboratories, Inc
PO Box 5438
Bossier City, LA 71171

Date 1/28/03

Number of pages including cover sheet ____

To:

Attn: John Jones

Phone ____

Fax Phone ____

CC: ____

From:

Dick Mosher

Phone 318-746-2404

Fax Phone 318-742-1448

REMARKS

☐ Urgent ☐ For your review ☐ Reply ASAP ☐ Please comment

John,
Should we also fax this to Jesse Evans?

FALKNER RED-RIVER LABORATORIES, INC.

1039 PEARL DRIVE·P.O. BOX 5438
BOSSIER CITY, LA 71111
PHONE: 318-746-2404·FAX: 318-742-1448

LAB REPORT #: 4-142681

REPORT DATE: January 28, 2003

SUPPLIER: John D. Jones Engineering

PAGE 2 OF 2

REQUESTED BY: John D. Jones

DATE RECEIVED: January 6, 2003

Product	[redacted]	[redacted]		
Grade	Jicarilla 117E	Jicarilla 117E		
Tank #	No 2A	No 2A		
Sample #	Sample #9	Sample #10		
Date Shipped	1-6-03	1-6-03		
Gravity				
I.B.P.				
5% Recovered At				
10% "				
20%				
30%				
40%				
50%				
60%				
70%				
80%				
90%				
95%				
End Point				
Recovery				
Residue				
Loss				
Color				
RVP	16.1	13.7		
Motor				
Sulfur, wt%				
Flash, °F				
B.S.& W., Vol %				
Doctor				
Gum				

REMARKS:

A: The results of this test relate only to the items tested.

B: This report will not be reproduced except in full, without the written approval of the laboratory.

FOR FALKNER RED RIVER LABORATORIES, INC

Condensate Sample

[redacted]

ALCHEM, INC.

P. O. Box 426 / Ruston, LA 71273-0426 / Office 318-243-1181 / Fax 318-255-7191

COMPANY	: FALKNER LAB	ID#	: 0115T0032
ATTENTION	: JOHN	SAMPLED	: NOT GIVEN
REFERENCE	: APACHE	ANALYZED	: 01/12/03
SAMPLE NAME	: JICAARILLA	CONDITIONS	: NOT GIVEN
METER STATION #:	RIO AARRIBA, NM	MISCELLANEOUS	: N/A

COMPONENT	MOLE%	L.V.%	L.W.%	psia 15.025	psia 14.65
Nitrogen	0.00	0.00	0.00	-	-
Methane	0.17	0.06	0.03	-	-
CO2	0.00	0.00	0.00	-	-
Ethane	0.56	0.38	0.19	0.1527	0.1489
Propane	2.64	1.71	1.29	0.7420	0.7235
Isobutane	2.61	2.02	1.69	0.8710	0.8492
n-Butane	5.45	4.11	3.53	1.7528	1.7090
Isopentane	8.32	7.27	6.69	3.1053	3.0278
n-Pentane	7.71	6.70	6.20	2.8484	2.7773
Neohexane	0.65	0.63	0.62	0.2767	0.2698
2-MPentane	0.16	0.19	0.16	0.0677	0.0660
3-MPentane	4.33	4.24	4.16	1.8025	1.7575
n-Hexane	8.73	8.60	8.38	1.8025	3.5709
Heptanes+	58.58	64.10	67.05	27.0357	2.7130
Totals	100.01	100.01	99.99	40.4572	17.6129

TOTAL SAMPLE (CALCULATED by GPA 2145-90 & GPSA-86)

Specific Gravity (H2O=1)	0.6806	60/60
API Gravity	76.40	60/60
Molecular Weight	89.71	
Absolute Density	5.67	LBS/GAL
Heating Value Liq. Idl Gas	118629	BTU/GAL
Vapor/Liquid	23.58	CUFT/GAL
Vapor Pressure	12.28	PSIG & 100 F

PENTANES+ FRACTION (CALCULATED by GPA 2145-90 & GPSA-86)

Specific Gravity (H2O=1)	0.6920	60/60
API Gravity	72.98	60/60
Molecular Weight	94.45	
Absolute Density	5.77	LBS/GAL
Heating Value Liq. Idl Gas	123136	BTU/GAL
Vapor/Liquid	23.32	CUFT/GAL

FALKNER RED-RIVER LABORATORIES, INC.

1039 PEARL DRIVE·P.O. BOX 5438
BOSSIER CITY, LA 71111
PHONE: 318-746-2404·FAX: 318-742-1448

LAB REPORT #: 4-142681

Mesa Verde

REPORT DATE: April 17, 2003

SUPPLIER: John D. Jones Engineering

13°a

PAGE 1 OF 2

REQUESTED BY: John D. Jones

DATE RECEIVED: March 1, 2003

Sample #1

Sample #	Crude #	Crude #	Crude #	Crude #	Crude #	Crude #
Grade	IBP-200	200-300	300-350	350-500	500-650	650-1025
Gravity	76.5	55.7	49.3	39.8		
I.B.P.	76	214	304	364		
5% Recovered At	103	218	---	376		
10% "	113	226	310	378		
20%	126	229	312	384		
30%	135	231	314	392		
40%	144	235	316	400		
50%	151	238	318	412		
60%	158	242	320	---		
70%	164	248	322	---		
80%	172	255	325	---		
90%	183	267	330	---		
95%	195	273	---	---		
End Point	225	328	351	420		
Recovery	97.0	99.0	99.0	55.0		
Residue	1.0	0.5	0.5	44.0		
Loss	2.0	0.5	0.5	1.0		
Specific Gravity	.6803	.7559	.7826	.8260		
Sulfur, wt%	<.005	<.005	<.005	.047		
Freeze Point	---	---	Below -65°C	---		
Flash Point	---	---	103°F	---		
Aromatics	---	---	26.08	21.23		
Olefins	---	---	1.32	0.00		
Saturate	---	---	72.6	78.77		
Nitrogen	---	<1	---	---		
Gross Heat of Combustion	---	---	19753	---		
US Cetane Index	---	---	---	39.0		
Yield L.V. %	22	61	11	6		
Yield wt %	[illegible]	62.5	11.6	6.7		
Smoke point	---	---	---	**		
Cloud Point	---	---	---	**		
H2S	---	---	---	---		
RSH	---	---	---	---		
Viscosity @100°	---	---	---	---		
Viscosity @210°	---	---	---	---		

REMARKS: ** = insufficient sample

: The results of this test relate only to the items tested.
This report will not be reproduced except in full, without the written approval of the laboratory.

FOR FALKNER RED RIVER LABORATORIES, INC

FALKNER RED-RIVER LABORATORIES, INC.

1039 PEARL DRIVE·P.O. BOX 5438
BOSSIER CITY, LA 71111
PHONE: 318-746-2404·FAX: 318-742-1448

LAB REPORT #: 4-142681

REPORT DATE: April 17, 2003

SUPPLIER: John D. Jones Engineering

PAGE 1 OF 2

REQUESTED BY: John D. Jones

DATE RECEIVED: March 1, 2003

Sample #1

Sample #	Crude #	Crude #	Crude #	Crude #	Crude #	Crude #
Grade	IBP-200	200-300	300-350	350-500	500-650	650-1025
Gravity	76.5	55.7	49.3	39.8		
I.B.P.	76	214	304	364		
5% Recovered At	103	218	---	376		
10% "	113	226	310	378		
20%	126	229	312	384		
30%	135	231	314	392		
40%	144	235	316	400		
50%	151	238	318	412		
60%	158	242	320	---		
70%	164	248	322	---		
80%	172	255	325	---		
90%	183	267	330	---		
95%	195	273	---	---		
End Point	225	328	351	420		
Recovery	97.0	99.0	99.0	55.0		
Residue	1.0	0.5	0.5	44.0		
Loss	2.0	0.5	0.5	1.0		
Specific Gravity	.6803	.7559	.7826	.8260		
Sulfur, wt%	<.005	<.005	<.005	.047		
Freeze Point	---	---	Below -65°C	---		
Flash Point	---	---	103°F	---		
Aromatics	---	---	26.08	21.23		
Olefins	---	---	1.32	0.00		
Saturate	---	---	72.6	78.77		
Nitrogen	---		---	---		
Gross Heat of Combustion	---	---	19753	---		
US Cetane Index	---	---	---	39.0		
Yield L.V. %	22	61	11	6		
Yield wt %						
Smoke point	---	---	---	**		
Cloud Point	---	---	---	**		
H2S	---	---	---	---		
RSH	---	---	---	---		
Viscosity @100°	---	---	---	---		
Viscosity @210°	---	---	---	---		

REMARKS: ** = insufficient sample

A: The results of this test relate only to the items tested.

B: This report will not be reproduced except in full, without the written approval of the laboratory.

R. E. Gardner
FOR FALKNER RED RIVER LABORATORIES, INC

not a duplicate

8210 Mosley Rd.
Houston, TX 77075
713 943-9776 Telephone
713 943-3846 Facsimile

CORE LABORATORIES

JOHN I FALKNER
FALKNER-RED RIVER LABS

1039 PEARL DRIVE
BOSSIER CITY, LA 71111

Sample Number: 130818-012
Sample Date:
Date Reported: 3/6/03
Date Received: 2/25/03
Sample ID: #1 (Crude)
Description:

Analytical Report

Test	Result	Units	Method	Date	Analyst
Nitrogen Total by Chemilum.	5	ppm wt	ASTM D-4629	2/28/03	JT

Approved By: Jean Waits
Supervising Chemist

The analytical results, opinions or interpretations contained in this report are based upon information and material supplied by the client for whose exclusive and confidential use this report has been made. The analytical results, opinions or interpretations expressed represent the best judgment of Core Laboratories. Core Laboratories, however, makes no warranty or representation, express or implied, of any type, and expressly disclaims same as to the productivity, proper operations or profitableness of any oil, gas, coal, or other mineral, property, well or sand in connection with which such report is used or relied upon for any reason whatsoever. This report shall not be reproduced, in whole or in part, without the written approval of Core Laboratories.

8210 Mosley Rd.
Houston, TX 77075
713 943-9776 Telephone
713 943-3846 Facsimile

CORE LABORATORIES

JOHN F FALKNER
FALKNER-RED RIVER LABS

1039 PEARL DRIVE
BOSSIER CITY, LA 71111

Sample Number: 130818-007
Sample Date:
Date Reported: 3/6/03
Date Received: 2/25/03
Sample ID: #1 (IBP-200)
Description:

Analytical Report

Test	Result	Units	Method	Date	Analyst
Capillary Gas Chromatography	Attached		ASTM D-5134 Mod	2/27/03	PKT

Approved By: Jean Waits
Supervising Chemist

The analytical results, opinions or interpretations contained in this report are based upon information and material supplied by the client for whose exclusive and confidential use this report has been made. The analytical results, opinions or interpretations expressed represent the best judgment of Core Laboratories. Core Laboratories, however, makes no warranty or representation, express or implied, of any type, and expressly disclaims same as to the productivity, proper operations or profitableness of any oil, gas, coal, or other mineral, property, well or sand in connection with which such report is used or relied upon for any reason whatsoever. This report shall not be reproduced, in whole or in part, without the written approval of Core Laboratories.

Core Lab
PETROLEUM SERVICES

8210 Mosley Rd.
Houston, TX 77075
713-943-9776 Telephone
713-943-3846 Facsimile

CORE LABORATORIES

#1 (IBP-200) **ASTM D-6623** **130818-7**

Component Name	WT %	LV %	Mol %
Ethane	0.01	0.02	0.03
Propane	0.88	1.17	1.59
Isobutane	1.86	2.23	2.55
N-Butane	5.79	6.68	7.93
2,2-Dimethylpropane	0.05	0.06	0.06
Isopentane	10.17	10.97	11.19
N-Pentane	11.45	12.21	12.61
2,2-Dimethylbutane	0.82	0.84	0.76
Cyclopentane	1.37	1.23	1.55
2,3-Dimethylbutane	1.99	2.01	1.84
2-Methylpentane	10.70	10.94	9.87
3-Methylpentane	6.73	6.78	6.21
N-Hexane	16.64	16.87	15.34
2,2-Dimethylpentane	0.68	0.68	0.54
Methylcyclopentane	10.07	9.00	9.51
2,4-Dimethylpentane	1.01	1.00	0.80
2,2,3-Trimethylbutane	0.15	0.15	0.12
Benzene	3.18	2.42	3.24
3,3-Dimethylpentane	0.18	0.17	0.14
Cyclohexane	8.79	7.56	8.30
2-Methylhexane	1.65	1.63	1.31
2,3-Dimethylpentane	0.45	0.43	0.36
1,1-Dimethylcyclopentane	0.41	0.36	0.33
3-Methylhexane	1.16	1.13	0.92
Cis-1,3-dimethylcyclopentane	0.43	0.39	0.35
Trans-1,3-dimethylcyclopentane	0.33	0.30	0.27
3-Ethylpentane	0.05	0.05	0.04
Trans-1,2-dimethylcyclopentane	0.50	0.45	0.41
N-Heptane	0.69	0.68	0.55
Methylcyclohexane	0.76	0.66	0.62
1,1,3-Trimethylcyclopentane	0.02	0.02	0.01
Ethylcyclopentane	0.02	0.02	0.02
2,5-Dimethylhexane	0.01	0.01	0.01
2,4-Dimethylhexane	0.01	0.01	0.01
Trans,cis-1,2,4-trimethylcyclopentane	0.01	0.01	0.01
Toluene	0.22	0.17	0.19
2-Methylheptane	0.01	0.01	0.01
3-Methylheptane	0.02	0.02	0.01
N-Octane	0.01	0.01	0.01
N-Nonane	0.01	0.01	0.01
1,2,4-Trimethylbenzene	0.01	0.01	0.01
N-Decane	0.04	0.04	0.02
Sec-butylcyclohexane	0.01	0.01	0.01

Core Lab
PETROLEUM SERVICES

8210 Mosley Rd.
Houston, TX 77075
713-943-9776 Telephone
713-943-3846 Facsimile

CORE LABORATORIES

#1 (IBP-200) **ASTM D-6623** **130818-7**

Component Name	WT %	LV %	Mol %
Butylcyclohexane	0.01	0.01	0.01
1-Methyl-3-n-propylbenzene	0.01	0.01	0.01
Cis 1-methyl 4-ter-butylcyclohexane	0.01	0.01	0.01
4-Methyldecane	0.01	0.01	0.01
5-Methyldecane	0.01	0.01	0.01
1,4-Dimethyl-2-ethylbenzene	0.01	0.01	0.01
3-Methyldecane	0.01	0.01	0.01
N-Undecane	0.06	0.05	0.03
4-Methylindan	0.01	0.01	0.01
6-Methylundecane	0.01	0.01	0.00
2-Methylundecane	0.02	0.02	0.01
Naphthalene	0.01	0.01	0.01
C11 Aromatic	0.05	0.04	0.03
N-Dodecane	0.04	0.04	0.02
2-Methylnaphthalene	0.01	0.01	0.01
1-Methylnaphthalene	0.01	0.01	0.01
Tridecanes	0.02	0.02	0.01
N-Tridecane	0.05	0.04	0.02
Tetradecanes	0.10	0.08	0.04
N-Tetradecane	0.05	0.04	0.02
Pentadecanes	0.05	0.04	0.02
N-Pentadecane	0.03	0.03	0.01
Hexadecanes	0.02	0.02	0.01
N-Hexadecane	0.01	0.01	0.00
Heptadecanes	0.01	0.01	0.00
N-Heptadecane	0.01	0.01	0.00
Octadecanes	0.01	0.01	0.00
	100.00	100.00	100.00

Mol WT of Sample	79.56
Mol WT C6 Plus	86.72
Density of Sample	0.6741
Density C6 Plus	0.7060

Core Lab
PETROLEUM SERVICES

8210 Mosley Rd.
Houston, TX 77075
713-943-9776 Telephone
713-943-3846 Facsimile

CORE LABORATORIES

#1 (IBP-200) **ASTM D-6623** **130818-7**

Summary by Group

Totals

Group	%Wt	% Vol
Paraffin	34.69	36.55
Isoparaf.	37.74	39.16
Olefin	0.00	0.00
Naphthene	22.74	20.03
Aromatic	3.52	2.70
Oxygenates		
Unidentified	1.31	1.56

Summary by Carbon

Totals

Group	%Wt	% Vol
C4	7.65	8.91
C5	23.04	24.47
C6	58.92	56.42
C7	8.69	8.27
C8	0.09	0.09
C9	0.02	0.02
C10	0.10	0.10
C11	0.18	0.16

Composite by Carbon

Group	C#	%Wt	% Vol
Paraffin	C4	5.79	6.68
	C5	11.45	12.21
	C6	16.64	16.87
	C7	0.69	0.68
	C8	0.01	0.01
	C9	0.01	0.01
	C10	0.04	0.04
	C11	0.06	0.05
Isoparaf.	C4	1.86	2.23
	C5	10.22	11.03
	C6	20.24	20.57
	C7	5.33	5.24
	C8	0.05	0.05
	C9	0.00	0.00
	C10	0.00	0.00
	C11	0.04	0.04

Core Lab
PETROLEUM SERVICES

8210 Mosley Rd
Houston, TX 77075
713-943-9776 Telephone
713-943-3846 Facsimile

CORE LABORATORIES

#1 (IBP-200) **ASTM D-6623** **130818-7**

Olefin	C4	0.00	0.00
	C5	0.00	0.00
	C6	0.00	0.00
	C7	0.00	0.00
	C8	0.00	0.00
	C9	0.00	0.00
	C10	0.00	0.00
	C11		
Naphthene	C4		
	C5	1.37	1.23
	C6	18.86	16.56
	C7	2.45	2.18
	C8	0.03	0.03
	C9	0.00	0.00
	C10	0.02	0.02
	C11	0.01	0.01
Aromatic	C4		
	C5		
	C6	3.18	2.42
	C7	0.22	0.17
	C8	0.00	0.00
	C9	0.01	0.01
	C10	0.04	0.04
	C11	0.07	0.06

	%Wt	% Vol
Benzene	3.18	2.42

The analytical results , opinions or interpretations contained in this report are based upon information and material supplied by the client for whose exclusive and confidential use this report has been made. The analytical results, opinions, or interpretations expressed represent the best judgement of Core Laboratories. Core Laboratories, however, makes no warranty or representation, expressed or implied, of any type, and expressly disclaims same as to the productivity, proper operations or profitableness of any oil, gas, coal, or other mineral property, well or sand in connection with such report is used or relied upon for any reason whatsoever. The report shall not be reproduced, in whole or in part, without the written approval of Core Laboratories.

8210 Mosley Rd.
Houston, TX 77075
713 943-9776 Telephone
713 943-3846 Facsimile

CORE LABORATORIES

JOHN I FALKNER
FALKNER-RED RIVER LABS

1039 PEARL DRIVE
BOSSIER CITY, LA 71111

Sample Number: 130818-008
Sample Date:
Date Reported: 3/6/03
Date Received: 2/25/03
Sample ID: [redacted] (200-300)
Description:

Analytical Report

Test	Result	Units	Method	Date	Analyst
Capillary Gas Chromatography	Attached		ASTM D-5134 Mod	2/27/03	PKT
Nitrogen Total by Chemilum.	[redacted]	ppm wt	ASTM D-4629	2/28/03	JT

Approved By: Jean Waits
Supervising Chemist

The analytical results, opinions or interpretations contained in this report are based upon information and material supplied by the client for whose exclusive and confidential use this report has been made. The analytical results, opinions or interpretations expressed represent the best judgment of Core Laboratories. Core Laboratories, however, makes no warranty or representation, express or implied, of any type, and expressly disclaims same as to the productivity, proper operations or profitableness of any oil, gas, coal, or other mineral, property, well or sand in connection with which such report is used or relied upon for any reason whatsoever. This report shall not be reproduced, in whole or in part, without the written approval of Core Laboratories.

Core Lab
PETROLEUM SERVICES

8210 Mosley Rd.
Houston, TX 77075
713-943-9776 Telephone
713-943-3846 Facsimile

CORE LABORATORIES

#1 (200-300) **ASTM D-6623** **130818-8**

Component Name	WT %	LV %	Mol %
Isobutane	0.01	0.01	0.02
N-Butane	0.02	0.03	0.04
Isopentane	0.02	0.02	0.03
N-Pentane	0.02	0.02	0.03
2-Methylpentane	0.02	0.02	0.02
3-Methylpentane	0.02	0.02	0.02
N-Hexane	0.11	0.13	0.14
2,2-Dimethylpentane	0.09	0.10	0.10
Methylcyclopentane	0.21	0.21	0.26
2,4-Dimethylpentane	0.19	0.21	0.20
2,2,3-Trimethylbutane	0.03	0.03	0.03
Benzene	0.05	0.04	0.07
3,3-Dimethylpentane	0.13	0.14	0.14
Cyclohexane	1.82	1.75	2.30
2-Methylhexane	2.96	3.27	3.14
2,3-Dimethylpentane	0.74	0.80	0.78
1,1-Dimethylcyclopentane	0.48	0.48	0.52
3-Methylhexane	3.11	3.40	3.29
Cis-1,3-dimethylcyclopentane	0.98	0.99	1.06
Trans-1,3-dimethylcyclopentane	0.95	0.95	1.03
3-Ethylpentane	0.20	0.21	0.21
Trans-1,2-dimethylcyclopentane	1.48	1.48	1.60
2,2,4-Trimethylpentane	0.02	0.02	0.02
N-Heptane	8.09	8.88	8.57
Methylcyclohexane	15.52	15.15	16.78
1,1,3-Trimethylcyclopentane	0.84	0.84	0.79
Ethylcyclopentane	0.60	0.59	0.65
2,5-Dimethylhexane	0.65	0.70	0.60
2,4-Dimethylhexane	0.73	0.78	0.68
Trans,cis-1,2,4-trimethylcyclopentane	0.61	0.61	0.58
3,3-Dimethylhexane	0.21	0.22	0.20
Trans,cis-1,2,3-trimethylcyclopentane	0.49	0.49	0.46
2,3,4-Trimethylpentane	0.05	0.05	0.05
Toluene	7.49	6.49	8.63
2,3-Dimethylhexane	0.65	0.69	0.60
2-Methyl-3-Ethylpentane	0.07	0.07	0.07
1,1,2-trimethylcyclopentane	0.02	0.02	0.02
2-Methylheptane	3.57	3.84	3.32
4-Methylheptane	1.22	1.30	1.13
3,4-Dimethylhexane	0.10	0.10	0.09
Cis,trans,1,2,4-trimethylcyclopentane	0.09	0.09	0.09
Cis-1,3 dimethylcyclohexane	3.90	3.82	3.69
3-Methylheptane	2.86	3.04	2.66

Core Lab
PETROLEUM SERVICES

8210 Mosley Rd
Houston, TX 77075
713-943-9776 Telephone
713-943-3846 Facsimile

CORE LABORATORIES

#1 (200-300) **ASTM D-5623** **130818-8**

Component Name	WT %	LV %	Mol %
Trans-1,4-dimethylcyclohexane	1.61	1.59	1.52
1,1-Dimethylcyclohexane	0.52	0.50	0.49
Trans-1-ethyl-3-methylcyclopentane	0.24	0.24	0.23
Cis-1-ethyl-3-methylcyclopentane	0.15	0.15	0.14
Trans-1-ethyl-2-methylcyclopentane	0.22	0.21	0.21
1-Ethyl-1-methylcyclopentane	0.07	0.07	0.07
Trans-1,2,dimethylcyclohexane	1.41	1.37	1.33
Trans-1,3,dimethylcyclohexane	0.01	0.01	0.01
N-Octane	8.29	8.86	7.70
Isopropylcyclopentane	0.09	0.09	0.09
2,3,5-Trimethylhexane	0.06	0.06	0.05
Cis-1-ethyl-2-methylcyclopentane	0.03	0.03	0.03
2,2-Dimethylheptane	0.27	0.29	0.22
Cis-1,2-dimethylcyclohexane	0.25	0.24	0.24
2,4-Dimethylheptane	0.53	0.56	0.44
4,4-Dimethylheptane	0.05	0.05	0.04
Ethylcyclohexane	2.41	2.30	2.28
Cis,cis,1-3-5,trimethylcyclohexane	0.02	0.02	0.02
2,6-Dimethylheptane	0.87	0.92	0.72
1,1,3-Trimethylcyclohexane	0.57	0.55	0.48
C9 Naphthenes	0.51	0.50	0.43
2,5-Dimethylheptane	1.18	1.24	0.98
3,5-Dimethylheptane	0.27	0.28	0.22
Ethylbenzene	0.85	0.74	0.85
Trans,trans,1,2,4-trimethylcyclohexane	0.43	0.42	0.36
Cis,trans,1,3,5-trimethylcyclohexane	0.05	0.05	0.04
Meta-Xylene	5.74	4.99	5.74
Para-Xylene	1.75	1.53	1.75
2,3-Dimethylheptane	0.50	0.52	0.41
3,4-Dimethylheptane D/L	0.07	0.07	0.06
3,4-Dimethylheptane L/D	0.27	0.28	0.22
4-Methyloctane	0.83	0.86	0.69
2-Methyloctane	1.07	1.13	0.89
Cis,cis,1,2,3,trimethylcyclohexane	0.08	0.08	0.07
3-Ethylheptane	0.22	0.23	0.18
3-Methyloctane	1.02	1.06	0.84
Ortho-Xylene	1.46	1.25	1.46
Trans-1-Methyl-2-propylcyclopentane	0.03	0.03	0.03
Cis-1-ethyl-3-methylcyclohexane	0.07	0.07	0.06
Trans-1-ethyl-4-methylcyclohexane	0.44	0.41	0.37
Isobutylcyclopentane	0.29	0.28	0.24
1-Ethyl-1-methylcyclohexane	0.03	0.03	0.03
Cis,trans,1,2,3,trimethylcyclohexane	0.07	0.07	0.06

8210 Mosley Rd.
Houston, TX 77075
713-943-9776 Telephone
713-943-3846 Facsimile

CORE LABORATORIES

#1 (200-300) **ASTM D-6623** **130818-8**

Component Name	WT %	LV %	Mol %
N-Nonane	1.99	2.08	1.65
Trans-1-ethyl-3-methylcyclohexane	0.15	0.14	0.13
Trans-1-ethyl-2-methylcyclohexane	0.06	0.06	0.05
Isopropylbenzene	0.06	0.05	0.05
2,2-Dimethyloctane	0.12	0.12	0.09
Isopropylcyclohexane	0.05	0.05	0.04
Cis-1-ethyl-2-methylcyclohexane	0.02	0.02	0.02
2,4-Dimethyloctane	0.10	0.10	0.07
2,6-Dimethyloctane	0.10	0.10	0.07
2,5-Dimethyloctane	0.03	0.03	0.02
N-propylcyclohexane	0.22	0.21	0.18
N-butylcyclopentane	0.04	0.04	0.03
2,7-Dimethyloctane	0.02	0.02	0.01
n-Propylbenzene	0.09	0.08	0.08
3,6-Dimethyloctane	0.01	0.01	0.01
1-Methyl-3-ethylbenzene	0.13	0.11	0.11
1-Methyl-4-ethylbenzene	0.06	0.05	0.05
1,3,5-Trimethylbenzene	0.10	0.09	0.09
5-Methylnonane	0.02	0.02	0.01
4-Methylnonane	0.03	0.03	0.02
1-Methyl-2-ethylbenzene	0.05	0.04	0.04
3-Ethyloctane	0.01	0.01	0.01
3-Methylnonane	0.03	0.03	0.02
1,2,4-Trimethylbenzene	0.07	0.06	0.06
Cis-1-methyl-3-propylcyclohexane	0.01	0.01	0.01
Trans 1,4 diethylcyclohexane	0.01	0.01	0.01
N-Decane	0.05	0.05	0.04
1,2,3-Trimethylbenzene	0.01	0.01	0.01
4-Methylundecane	0.01	0.01	0.01
Tetradecanes	0.02	0.02	0.01
Hexadecanes	0.01	0.01	0.00
	100.00	100.00	100.00

Mol WT of Sample	106.15
Mol WT C6 Plus	106.20
Density of Sample	0.7558
Density C6 Plus	0.7569

Core Lab
PETROLEUM SERVICES

8210 Mosley Rd.
Houston, TX 77075
713-943-9776 Telephone
713-943-3846 Facsimile

CORE LABORATORIES

[redacted] **ASTM D-6623** **130818-8**

Summary by Group

Totals	Group	%Wt	% Vol
	Paraffin	18.57	20.05
	Isoparaf.	25.33	27.06
	Olefin	0.00	0.00
	Naphthene	38.15	37.32
	Aromatic	17.91	15.53
	Oxygenates		
	Unidentified	0.04	0.04

Summary by Carbon

Totals	Group	%Wt	% Vol
	C4	0.03	0.04
	C5	0.04	0.04
	C6	2.23	2.17
	C7	43.04	43.17
	C8	41.18	40.85
	C9	12.90	13.15
	C10	0.54	0.54
	C11	0.00	0.00

Composite by Carbon

Group	C#	%Wt	% Vol
Paraffin	C4	0.02	0.03
	C5	0.02	0.02
	C6	0.11	0.13
	C7	8.09	8.88
	C8	8.29	8.86
	C9	1.99	2.08
	C10	0.05	0.05
	C11	0.00	0.00
Isoparaf.	C4	0.01	0.01
	C5	0.02	0.02
	C6	0.04	0.04
	C7	7.45	8.16
	C8	10.13	10.81
	C9	7.21	7.55
	C10	0.47	0.47
	C11	0.00	0.00

8210 Mosley Rd.
Houston, TX 77075
713-943-9776 Telephone
713-943-3846 Facsimile

CORE LABORATORIES

#1 (200-300) **ASTM D-6623** **130818-8**

Olefin	C4	0.00	0.00
	C5	0.00	0.00
	C6	0.00	0.00
	C7	0.00	0.00
	C8	0.00	0.00
	C9	0.00	0.00
	C10	0.00	0.00
	C11		
Naphthene	C4		
	C5	0.00	0.00
	C6	2.03	1.96
	C7	20.01	19.64
	C8	12.96	12.67
	C9	3.13	3.03
	C10	0.02	0.02
	C11	0.00	0.00
Aromatic	C4		
	C5		
	C6	0.05	0.04
	C7	7.49	6.49
	C8	9.80	8.51
	C9	0.57	0.49
	C10	0.00	0.00
	C11	0.00	0.00

	%Wt	% Vol
Benzene	0.05	0.04

The analytical results , opinions or interpretations contained in this report are based upon information and material supplied by the client for whose exclusive and confidential use this report has been made. The analytical results, opinions, or interpretations expressed represent the best judgement of Core Laboratories. Core Laboratories, however, makes no warranty or representation, expressed or implied, of any type, and expressly disclaims same as to the productivity, proper operations or profitableness of any oil, gas, coal, or other mineral property, well or sand in connection with such report is used or relied upon for any reason whatsoever. The report shall not be reproduced, in whole or in part, without the written approval of Core Laboratories.

8210 Mosley Rd.
Houston, TX 77075
713 943-9776 Telephone
713 943-3846 Facsimile

CORE LABORATORIES

JOHN I FALKNER
FALKNER-RED RIVER LABS

1039 PEARL DRIVE
BOSSIER CITY, LA 71111

Sample Number: 130818-009
Sample Date:
Date Reported: 3/6/03
Date Received: 2/25/03
Sample ID: #1 (300350)
Description:

Analytical Report

Test	Result	Units	Method	Date	Analyst
Capillary Gas Chromatography	Attached		ASTM D-5134 Mod	2/27/03	PKT
Naphthalenes in Jet Fuel	2.52	WT %	ASTM D-1840	2/28/03	VS

Approved By: Jean Waits
Supervising Chemist

The analytical results, opinions or interpretations contained in this report are based upon information and material supplied by the client for whose exclusive and confidential use this report has been made. The analytical results, opinions or interpretations expressed represent the best judgment of Core Laboratories. Core Laboratories, however, makes no warranty or representation, express or implied, of any type, and expressly disclaims same as to the productivity, proper operations or profitableness of any oil, gas, coal, or other mineral, property, well or sand in connection with which such report is used or relied upon for any reason whatsoever. This report shall not be reproduced, in whole or in part, without the written approval of Core Laboratories.

Core Lab
PETROLEUM SERVICES

8210 Mosley Rd.
Houston, TX 77075
713-943-9776 Telephone
713-943-3846 Facsimile

CORE LABORATORIES

#1 (300-350) **ASTM D-6623** **130818-9**

Component Name	WT %	LV %	Mol %
N-Octane	0.03	0.03	0.04
2,2-Dimethylheptane	0.01	0.01	0.01
2,4-Dimethylheptane	0.02	0.02	0.02
Ethylcyclohexane	0.09	0.09	0.11
2,6-Dimethylheptane	0.05	0.06	0.05
1,1,3-Trimethylcyclohexane	0.09	0.09	0.10
C9 Naphthenes	0.55	0.56	0.61
2,5-Dimethylheptane	0.11	0.12	0.12
3,5-Dimethylheptane	0.02	0.02	0.02
Ethylbenzene	0.03	0.03	0.04
Trans,trans,1,2,4-trimethylcyclohexane	0.31	0.32	0.34
Cis,trans,1,3,5-trimethylcyclohexane	0.03	0.03	0.03
Meta-Xylene	0.63	0.58	0.83
Para-Xylene	0.17	0.16	0.22
2,3-Dimethylheptane	0.20	0.22	0.22
3,4-Dimethylheptane D/L	0.03	0.03	0.03
3,4-Dimethylheptane L/D	0.07	0.08	0.08
4-Methyloctane	0.55	0.60	0.60
2-Methyloctane	0.87	0.96	0.95
Cis,cis,1,2,3,trimethylcyclohexane	0.05	0.05	0.06
3-Ethylheptane	0.26	0.29	0.28
3-Methyloctane	1.10	1.21	1.20
Ortho-Xylene	0.84	0.75	1.11
Trans-1-Methyl-2-propylcyclopentane	0.07	0.07	0.08
Cis-1-ethyl-3-methylcyclohexane	0.20	0.20	0.22
Trans-1-ethyl-4-methylcyclohexane	1.33	1.32	1.48
Isobutylcyclopentane	0.91	0.92	1.01
1-Ethyl-1-methylcyclohexane	0.10	0.10	0.11
Cis,trans,1,2,3,trimethylcyclohexane	0.25	0.25	0.28
N-Nonane	8.55	9.44	9.35
Trans-1-ethyl-3-methylcyclohexane	0.95	0.96	1.05
Trans-1-ethyl-2-methylcyclohexane	0.37	0.37	0.41
Cis-1-ethyl-4-methylcyclohexane	0.02	0.02	0.02
Isopropylbenzene	0.25	0.23	0.29
2,2-Dimethyloctane	0.82	0.89	0.81
Isopropylcyclohexane	0.47	0.46	0.52
Cis-1-ethyl-2-methylcyclohexane	0.19	0.19	0.21
2,4-Dimethyloctane	1.07	1.18	1.05
2,6-Dimethyloctane	2.02	2.20	1.99
2,5-Dimethyloctane	0.34	0.37	0.33
N-propylcyclohexane	2.65	2.64	2.94
N-butylcyclopentane	0.60	0.60	0.67
2,7-Dimethyloctane	0.23	0.25	0.23

8210 Mosley Rd.
Houston, TX 77075
713-943-9776 Telephone
713-943-3846 Facsimile

CORE LABORATORIES

#[redacted] **ASTM D-6623** **130818-9**

Component Name	WT %	LV %	Mol %
n-Propylbenzene	1.45	1.33	1.69
3,6-Dimethyloctane	0.35	0.38	0.34
1-Methyl-3-ethylbenzene	2.68	2.45	3.12
1-Methyl-4-ethylbenzene	1.41	1.29	1.64
1,3,5-Trimethylbenzene	3.90	3.56	4.54
5-Methylnonane	0.94	1.01	0.92
4-Methylnonane	1.40	1.51	1.38
1-Methyl-2-ethylbenzene	1.32	1.19	1.54
2-Methylnonane	0.94	1.02	0.92
3-Ethyloctane	0.37	0.40	0.36
1,2,3,5 Tet-methylcyclohexane	0.18	0.18	0.18
3-Methylnonane	1.86	2.01	1.83
1,2,3,4 Tet-methylcyclohexane	0.32	0.32	0.32
C10 Naphthenes	0.57	0.57	0.57
C10 Paraffin	0.09	0.10	0.08
1,2,4-Trimethylbenzene	4.34	3.92	5.06
Cis-1-methyl-3-propylcyclohexane	0.99	1.00	0.99
Trans 1,4 diethylcyclohexane	0.87	0.88	0.87
Trans-1-methyl-3-propylcyclohexane	0.14	0.14	0.14
1-Ethyl-2,3-dimethylcyclohexane	0.13	0.13	0.13
Isobutylbenzene	0.48	0.44	0.50
Cis-1-methyl-4-propylcyclohexane	0.21	0.21	0.21
N-Decane	8.06	8.75	7.94
1,2,3,4 Tet-methylcyclohexane	0.23	0.23	0.23
Trans 1,3 diethylcyclohexane	0.12	0.12	0.12
1,2,3-Trimethylbenzene	0.87	0.77	1.01
Trans 1,2 diethylcyclohexane	0.10	0.10	0.10
1-Methyl-3-isopropylbenzene	0.42	0.39	0.44
Cis 1,4 diethylcyclohexane	0.16	0.16	0.16
1-Methyl-4-isopropylbenzene	0.31	0.29	0.32
Indan (2,3-Dihydroindene)	0.38	0.31	0.45
Sec-butylcyclohexane	1.44	1.45	1.44
Butylcyclohexane	0.96	0.95	0.96
1,3-Diethylbenzene	0.55	0.50	0.57
C11 Naphthenes	0.40	0.40	0.36
1-Methyl-3-n-propylbenzene	1.06	0.97	1.11
1,4-Diethylbenzene	0.50	0.46	0.52
1,3-Dimethyl-5-ethylbenzene	0.60	0.55	0.63
1,2-Diethylbenzene	0.11	0.10	0.11
1-Methyl-2-n-propylbenzene	0.23	0.21	0.24
Cis 1-methyl 4-ter-butylcyclohexane	0.53	0.52	0.48
C11 Paraffins	0.78	0.83	0.70
4-Methyldecane	0.66	0.70	0.59

8210 Mosley Rd.
Houston, TX 77075
713-943-9776 Telephone
713-943-3846 Facsimile

CORE LABORATORIES

#1(300-350) **ASTM D-6623** **130818-9**

Component Name	WT %	LV %	Mol %
5-Methyldecane	0.46	0.49	0.41
1,4-Dimethyl-2-ethylbenzene	0.90	0.81	0.94
1,3-Dimethyl-4-ethylbenzene	0.42	0.38	0.44
3-Methyldecane	0.54	0.58	0.48
1,2-Dimethyl-4-ethylbenzene	0.46	0.42	0.48
1,3-Dimethyl-2-ethylbenzene	0.12	0.11	0.13
Tricyclodecane	0.29	0.29	0.30
1,2-Dimethyl-3-Ethylbenzene	0.26	0.23	0.27
N-Undecane	4.00	4.27	3.58
1,2,4,5-Tetramethylbenzene	0.23	0.21	0.24
1,2,3,5-Tetramethylbenzene	0.32	0.28	0.33
C11 Unidentified	1.34	1.33	1.17
4-Methylindan	0.25	0.21	0.26
5-Methylindan	0.16	0.13	0.17
1,2,3,4-Tetramethylbenzene	0.21	0.18	0.22
Tetralin	0.01	0.01	0.01
6-Methylundecane	0.47	0.50	0.39
4-Methylundecane	0.19	0.20	0.16
Naphthalene	0.63	0.50	0.69
3-Methylundecane	0.06	0.06	0.05
C11 Aromatic	2.26	2.07	2.13
N-Dodecane	1.88	1.98	1.56
Dodecanes	2.55	2.34	2.20
Pentamethylbenzene	0.04	0.03	0.04
2-Methylnaphthalene	0.55	0.46	0.54
1-Methylnaphthalene	0.27	0.21	0.27
Tridecanes	1.81	1.77	1.45
N-Tridecane	0.99	1.03	0.75
Tetradecanes	1.08	1.04	0.80
N-Tetradecane	0.63	0.65	0.44
Pentadecanes	1.03	0.98	0.70
N-Pentadecane	0.38	0.39	0.25
Hexadecanes	0.53	0.50	0.33
N-Hexadecane	0.25	0.26	0.15
Heptadecanes	0.42	0.39	0.25
N-Heptadecane	0.24	0.25	0.14
Pristane	0.16	0.16	0.08
Octadecanes	0.31	0.29	0.17
N-Octadecane	0.23	0.24	0.12
Phytane	0.11	0.11	0.06
Nonadecanes	0.27	0.25	0.14
N-Nonadecane	0.18	0.18	0.09
Eicosanes	0.22	0.20	0.11

8210 Mosley Rd.
Houston, TX 77075
713-943-9776 Telephone
713-943-3846 Facsimile

CORE LABORATORIES

~~#1-380-350T~~ **ASTM D-6623** **130818-9**

Component Name	WT %	LV %	Mol %
N-Eicosane	0.14	0.14	0.07
Heneicosanes	0.19	0.17	0.09
Docosanes	0.17	0.16	0.08
Tricosanes	0.13	0.12	0.06
Tetracosanes	0.12	0.11	0.05
Pentacosanes	0.10	0.09	0.04
Hexacosanes	0.09	0.08	0.04
Heptacosanes	0.08	0.07	0.03
Octacosanes Plus	0.36	0.32	0.13
	100.00	100.00	100.00

Mol WT of Sample	140.01
Mol WT C6 Plus	140.01
Density of Sample	0.7953
Density C6 Plus	0.7953

Summary by Group

Totals

Group	%Wt	% Vol
Paraffin	20.64	22.49
Isoparaf.	16.63	18.04
Olefin	0.00	0.00
Naphthene	16.87	16.89
Aromatic	29.62	26.72
Oxygenates		
Unidentified	16.24	15.86

Summary by Carbon

Totals

Group	%Wt	% Vol
C4	0.00	0.00
C5	0.00	0.00
C6	0.00	0.00
C7	0.00	0.00
C8	1.79	1.64
C9	37.58	37.26
C10	33.43	34.18
C11	10.96	11.06

Core Lab
PETROLEUM SERVICES

8210 Mosley Rd.
Houston, TX 77075
713-943-9776 Telephone
713-943-3846 Facsimile

CORE LABORATORIES

#1 (300-350) **ASTM D-6623** **130818-9**

Composite by Carbon

Group	C#	%Wt	% Vol
Paraffin	C4	0.00	0.00
	C5	0.00	0.00
	C6	0.00	0.00
	C7	0.00	0.00
	C8	0.03	0.03
	C9	8.55	9.44
	C10	8.06	8.75
	C11	4.00	4.27
Isoparaf.	C4	0.00	0.00
	C5	0.00	0.00
	C6	0.00	0.00
	C7	0.00	0.00
	C8	0.00	0.00
	C9	3.29	3.62
	C10	10.43	11.32
	C11	2.91	3.10
Olefin	C4	0.00	0.00
	C5	0.00	0.00
	C6	0.00	0.00
	C7	0.00	0.00
	C8	0.00	0.00
	C9	0.00	0.00
	C10	0.00	0.00
	C11		
Naphthene	C4		
	C5	0.00	0.00
	C6	0.00	0.00
	C7	0.00	0.00
	C8	0.09	0.09
	C9	9.14	9.15
	C10	6.71	6.73
	C11	0.93	0.92

8210 Mosley Rd.
Houston, TX 77075
713-943-9776 Telephone
713-943-3846 Facsimile

CORE LABORATORIES

#1(300-350) **ASTM D-6623** **130818-9**

Aromatic	C4		
	C5		
	C6	0.00	0.00
	C7	0.00	0.00
	C8	1.67	1.52
	C9	16.60	15.05
	C10	8.23	7.38
	C11	3.12	2.77

	%Wt	% Vol
Benzene	0.00	0.00

The analytical results, opinions or interpretations contained in this report are based upon information and material supplied by the client for whose exclusive and confidential use this report has been made. The analytical results, opinions, or interpretations expressed represent the best judgement of Core Laboratories. Core Laboratories, however, makes no warranty or representation, expressed or implied, of any type, and expressly disclaims same as to the productivity, proper operations or profitableness of any oil, gas, coal, or other mineral property, well or sand in connection with such report is used or relied upon for any reason whatsoever. The report shall not be reproduced, in whole or in part, without the written approval of Core Laboratories.

8210 Mosley Rd
Houston, TX 77075
713-943-9776 Telephone
713-943-3846 Facsimile

CORE LABORATORIES

Sample # 1 (350-End) **ASTM D-6623** **131514-10**

Component Name	WT %	LV %	Mol %
Trans,trans,1,2,4-trimethylcyclohexane	0.01	0.01	0.01
Meta-Xylene	0.01	0.01	0.01
4-Methyloctane	0.01	0.01	0.01
2-Methyloctane	0.02	0.02	0.02
3-Methyloctane	0.02	0.02	0.02
Ortho-Xylene	0.02	0.02	0.03
Trans-1-ethyl-4-methylcyclohexane	0.03	0.03	0.04
Isobutylcyclopentane	0.02	0.02	0.02
N-Nonane	0.13	0.15	0.16
Trans-1-ethyl-3-methylcyclohexane	0.01	0.01	0.01
Trans-1-ethyl-2-methylcyclohexane	0.01	0.01	0.01
2,2-Dimethyloctane	0.01	0.01	0.01
Isopropylcyclohexane	0.01	0.01	0.01
2,4-Dimethyloctane	0.01	0.01	0.01
2,6-Dimethyloctane	0.03	0.03	0.03
N-propylcyclohexane	0.04	0.04	0.05
N-butylcyclopentane	0.01	0.01	0.01
n-Propylbenzene	0.02	0.02	0.03
1-Methyl-3-ethylbenzene	0.05	0.05	0.06
1-Methyl-4-ethylbenzene	0.03	0.03	0.04
2,3-Dimethyloctane	0.02	0.02	0.02
1,3,5-Trimethylbenzene	0.07	0.07	0.09
4-Ethyloctane	0.01	0.01	0.01
5-Methylnonane	0.03	0.03	0.03
4-Methylnonane	0.05	0.06	0.05
1-Methyl-2-ethylbenzene	0.06	0.06	0.08
2-Methylnonane	0.05	0.06	0.05
3-Ethyloctane	0.02	0.02	0.02
1,2,3,5 Tet-methylcyclohexane	0.02	0.02	0.02
3-Methylnonane	0.17	0.19	0.18
1,2,3,4 Tet-methylcyclohexane	0.08	0.08	0.09
C10 Naphthenes	0.03	0.03	0.03
C10 Paraffin	0.02	0.02	0.02
1,2,4-Trimethylbenzene	0.33	0.30	0.42
Cis-1-methyl-3-propylcyclohexane	0.30	0.31	0.33
Trans 1,4 diethylcyclohexane	0.31	0.32	0.34
Trans-1-methyl-3-propylcyclohexane	0.05	0.05	0.05
1-Ethyl-2,3-dimethylcyclohexane	0.07	0.07	0.08
Isobutylbenzene	0.25	0.24	0.29
Cis-1-methyl-4-propylcyclohexane	0.13	0.13	0.14
sec-Butylbenzene	0.04	0.04	0.05
N-Decane	3.93	4.35	4.25
1,2,3,4 Tet-methylcyclohexane	0.20	0.21	0.22

8210 Mosley Rd.
Houston, TX 77075
713-943-9776 Telephone
713-943-3846 Facsimile

CORE LABORATORIES

Sample # 1 (350-End) **ASTM D-6623** **131514-10**

Component Name	WT %	LV %	Mol %
Trans 1,3 diethylcyclohexane	0.12	0.12	0.13
1,2,3-Trimethylbenzene	0.41	0.37	0.52
Trans 1,2 diethylcyclohexane	0.14	0.14	0.15
1-Methyl-3-isopropylbenzene	0.24	0.23	0.27
Cis 1,4 diethylcyclohexane	0.21	0.22	0.23
1-Methyl-4-isopropylbenzene	0.26	0.25	0.30
Indan (2,3-Dihydroindene)	0.45	0.38	0.59
Sec-butylcyclohexane	2.20	2.26	2.41
Butylcyclohexane	2.28	2.31	2.50
1,3-Diethylbenzene	1.07	1.00	1.23
C11 Naphthenes	1.78	1.80	1.77
1-Methyl-3-n-propylbenzene	1.35	1.27	1.55
1,4-Diethylbenzene	0.99	0.93	1.13
1,3-Dimethyl-5-ethylbenzene	1.25	1.16	1.43
1,2-Diethylbenzene	0.32	0.29	0.37
1-Methyl-2-n-propylbenzene	0.54	0.50	0.62
Cis 1-methyl 4-ter-butylcyclohexane	1.45	1.47	1.44
C11 Paraffins	0.57	0.62	0.56
4-Methyldecane	1.80	1.95	1.77
5-Methyldecane	1.36	1.47	1.34
1,4-Dimethyl-2-ethylbenzene	2.60	2.39	2.98
1,3-Dimethyl-4-ethylbenzene	1.21	1.12	1.39
3-Methyldecane	1.70	1.87	1.67
1,2-Dimethyl-4-ethylbenzene	1.29	1.19	1.48
1,3-Dimethyl-2-ethylbenzene	0.42	0.38	0.48
Tricyclodecane	1.12	1.13	1.26
1,2-Dimethyl-3-Ethylbenzene	0.88	0.80	1.01
N-Undecane	13.73	15.01	13.50
1,2,4,5-Tetramethylbenzene	0.86	0.79	0.98
1,2,3,5-Tetramethylbenzene	1.13	1.03	1.29
C11 Unidentified	4.39	4.46	4.19
4-Methylindan	0.93	0.79	1.08
5-Methylindan	0.62	0.53	0.72
1,2,3,4-Tetramethylbenzene	0.81	0.72	0.93
Tetralin	0.03	0.03	0.03
6-Methylundecane	1.67	1.81	1.51
5-Methylundecane	0.70	0.76	0.63
Pentylbenzene	0.17	0.16	0.18
Naphthalene	1.99	1.62	2.39
3-Methylundecane	0.23	0.25	0.21
C11 Aromatic	6.93	6.48	7.19
N-Dodecane	5.53	5.97	4.99
Dodecanes	9.44	8.87	8.94

8210 Mosley Rd.
Houston, TX 77075
713-943-9776 Telephone
713-943-3846 Facsimile

CORE LABORATORIES

Sample # 1 (350-End) **ASTM D-6623** **131514-10**

Component Name	WT %	LV %	Mol %
Pentamethylbenzene	0.12	0.11	0.12
2-Methylnaphthalene	1.08	0.91	1.17
1-Methylnaphthalene	0.48	0.38	0.52
Tridecanes	5.19	5.20	4.56
N-Tridecane	2.00	2.14	1.67
Tetradecanes	2.44	2.41	1.97
N-Tetradecane	0.75	0.79	0.58
Pentadecanes	1.30	1.27	0.97
N-Pentadecane	0.35	0.37	0.25
Hexadecanes	0.37	0.36	0.26
N-Hexadecane	0.15	0.16	0.10
Heptadecanes	0.17	0.16	0.11
N-Heptadecane	0.09	0.09	0.06
Octadecanes	0.11	0.11	0.07
N-Octadecane	0.06	0.06	0.03
Nonadecanes	0.07	0.07	0.04
N-Nonadecane	0.05	0.05	0.03
N-Eicosane	0.03	0.03	0.02
Heneicosanes	0.03	0.03	0.02
Docosanes	0.02	0.02	0.01
Tricosanes	0.02	0.02	0.01
Tetracosanes	0.02	0.02	0.01
Pentacosanes	0.02	0.02	0.01
Hexacosanes	0.02	0.02	0.01
Heptacosanes	0.01	0.01	0.00
Octacosanes Plus	0.95	0.86	0.38
Unidentified	0.19	0.22	0.23
	100.00	100.00	100.00

Mol WT of Sample	153.71
Mol WT C6 Plus	153.71
Density of Sample	0.8133
Density C6 Plus	0.8133

RON	0.3
MON	-0.1

8210 Mosley Rd.
Houston, TX 77075
713-943-9776 Telephone
713-943-3846 Facsimile

CORE LABORATORIES

Sample # 1 (350-End) **ASTM D-6623** **131514-10**

Summary by Group

Totals

Group	%Wt	% Vol
Paraffin	17.79	19.51
Isoparaf.	7.57	8.23
Olefin	0.00	0.00
Naphthene	10.63	10.81
Aromatic	29.31	26.65
Oxygenates		
Unidentified	34.70	34.80

Summary by Carbon

Totals

Group	%Wt	% Vol
C4	0.00	0.00
C5	0.00	0.00
C6	0.00	0.00
C7	0.00	0.00
C8	0.03	0.03
C9	1.74	1.62
C10	30.69	29.51
C11	32.84	34.04

Composite by Carbon

Group	C#	%Wt	% Vol
Paraffin	C4	0.00	0.00
	C5	0.00	0.00
	C6	0.00	0.00
	C7	0.00	0.00
	C8	0.00	0.00
	C9	0.13	0.15
	C10	3.93	4.35
	C11	13.73	15.01
Isoparaf.	C4	0.00	0.00
	C5	0.00	0.00
	C6	0.00	0.00
	C7	0.00	0.00
	C8	0.00	0.00
	C9	0.05	0.05
	C10	0.42	0.46
	C11	7.10	7.72

Core Lab
PETROLEUM SERVICES

8210 Mosley Rd.
Houston, TX 77075
713-943-9776 Telephone
713-943-3846 Facsimile

CORE LABORATORIES

Sample #1 (350-End) **ASTM D-6623** **131514-10**

Olefin	C4	0.00	0.00
	C5	0.00	0.00
	C6	0.00	0.00
	C7	0.00	0.00
	C8	0.00	0.00
	C9	0.00	0.00
	C10	0.00	0.00
	C11		
Naphthene	C4		
	C5	0.00	0.00
	C6	0.00	0.00
	C7	0.00	0.00
	C8	0.00	0.00
	C9	0.14	0.14
	C10	7.26	7.40
	C11	3.23	3.27
Aromatic	C4		
	C5		
	C6	0.00	0.00
	C7	0.00	0.00
	C8	0.03	0.03
	C9	1.42	1.28
	C10	19.08	17.30
	C11	8.78	8.04

The analytical results , opinions or interpretations contained in this report are based upon information and material supplied by the client for whose exclusive and confidential use this report has been made. The analytical results, opinions, or interpretations expressed represent the best judgement of Core Laboratories. Core Laboratories, however, makes no warranty or representation, expressed or implied, of any type, and expressly disclaims same as to the productivity, proper operations or profitableness of any oil, gas, coal, or other mineral property, well or sand in connection with such report is used or relied upon for any reason whatsoever. The report shall not be reproduced, in whole or in part, without the written approval of Core Laboratories.

FALKNER RED-RIVER LABORATORIES, INC.

1039 PEARL DRIVE·P.O. BOX 5438
BOSSIER CITY, LA 71111
PHONE: 318-746-2404·FAX: 318-742-1448

LAB REPORT #: 4-142681

REPORT DATE: March 4, 2003

SUPPLIER: John D. Jones Engineering

REQUESTED BY: John D. Jones

Pictured Cliff 102

DATE RECEIVED: January 6, 2003

SAMPLE #3

Sample #	Crude #3	Crude #3	Crude #3	Crude #3	Crude #3	Crude #3
Grade	IBP-200	200-300	300-350	350-500	500-650	650-1025
Gravity		56.2	50.5	44.6	37.6	28.0
I.B.P.		126	268	362	326	--
5% Recovered At	NO	--	--	370	500	--
10% "	CUT	180	288	376	520	--
20%		200	292	385	534	--
30%		213	298	396	540	--
40%		222	302	405	550	--
50%		232	307	414	558	--
60%		244	312	424	571	--
70%		255	318	436	581	--
80%		269	327	451	605	--
90%		296	339	473	628	--
95%		--	--	495	637	--
End Point		358	386	546	678	--
Recovery		97.0	98.0	99.0	99.0	--
Residue		1.0	1.0	1.0	1.0	--
Loss		2.0	1.0	0.0	0.0	--
Specific Gravity		.7539	.7775	.8035	.8368	.8871
Sulfur, wt%		.005	.004	.009	.017	.167
Freeze Point		--	-44°F	--	--	--
Flash Point		--	118°F	--	--	--
Aromatics		--	21.88	18.25	--	--
Olefins		--	1.48	1.12	--	--
Saturate		--	76.64	80.63	--	--
Nitrogen		--	--	--	--	--
Gross Heat of Combustion		--	19824	--	--	--
US Cetane Index		--	--	47.5	--	
Yield L.V. %	0	9.5	9.5	32.5	15.5	35.0
Yield wt %	0	8.42	8.69	30.71	15.25	36.51
Smoke point		--	--	26	--	--
Cloud Point		--	--	-42°F	--	--
H2S		--	--	--	Nil	--
RSH		--	--	--	.001	--
Viscosity @100°		--	--	--	39.65 SUS	solid
Viscosity @210°		--	--	--	--	48.66 SUS

REMARKS:

: The results of this test relate only to the items tested.
) This report will not be reproduced except in full, without the written approval of the laboratory.

John L Falkner

FOR FALKNER RED RIVER LABORATORIES, INC

Core Lab
PETROLEUM SERVICES

8210 Mosley Rd.
Houston, TX 77075
713 943-9776 Telephone
713 943-3846 Facsimile

CORE LABORATORIES

JOHN I FALKNER
FALKNER-RED RIVER LABS

1039 PEARL DRIVE
BOSSIER CITY, LA 71111

Sample Number: 130818-013
Sample Date:
Date Reported: 3/6/03
Date Received: 2/25/03
Sample ID: #3 (Crude)
Description:

Analytical Report

Test	Result	Units	Method	Date	Analyst
Nitrogen Total by Chemilum.	156	ppm wt	ASTM D-4629	2/28/03	JT

Approved By: _____
Jean Waits
Supervising Chemist

The analytical results, opinions or interpretations contained in this report are based upon information and material supplied by the client for whose exclusive and confidential use this report has been made. The analytical results, opinions or interpretations expressed represent the best judgment of Core Laboratories. Core Laboratories, however, makes no warranty or representation, express or implied, of any type, and expressly disclaims same as to the productivity, proper operations or profitableness of any oil, gas, coal, or other mineral, property, well or sand in connection with which such report is used or relied upon for any reason whatsoever. This report shall not be reproduced, in whole or in part, without the written approval of Core Laboratories.

Core Lab
PETROLEUM SERVICES

8210 Mosley Rd.
Houston, TX 77075
713 943-9776 Telephone
713 943-3846 Facsimile

CORE LABORATORIES

JOHN I FALKNER
FALKNER-RED RIVER LABS

1039 PEARL DRIVE
BOSSIER CITY, LA 71111

Sample Number: 130818-013
Sample Date:
Date Reported: 3/6/03
Date Received: 2/25/03
Sample ID: [redacted](Crude)
Description:

Analytical Report

Test	Result	Units	Method	Date	Analyst
Nitrogen Total by Chemilum.	156	ppm wt	ASTM D-4629	2/28/03	JT

Approved By: _____
Jean Waits
Supervising Chemist

The analytical results, opinions or interpretations contained in this report are based upon information and material supplied by the client for whose exclusive and confidential use this report has been made. The analytical results, opinions or interpretations expressed represent the best judgment of Core Laboratories. Core Laboratories, however, makes no warranty or representation, express or implied, of any type, and expressly disclaims same as to the productivity, proper operations or profitableness of any oil, gas, coal, or other mineral, property, well or sand in connection with which such report is used or relied upon for any reason whatsoever. This report shall not be reproduced, in whole or in part, without the written approval of Core Laboratories.

8210 Mosley Rd.
Houston, TX 77075
713 943-9776 Telephone
713 943-3846 Facsimile

CORE LABORATORIES

JOHN T FALKNER
FALKNER-RED RIVER LABS

1039 PEARL DRIVE
BOSSIER CITY, LA 71111

Sample Number: 130818-010
Sample Date:
Date Reported: 3/6/03
Date Received: 2/25/03
Sample ID: #3 (200-300)
Description:

Analytical Report

Test	Result	Units	Method	Date	Analyst
Capillary Gas Chromatography	Attached		ASTM D-5134 Mod	2/27/03	PKT
Nitrogen Total by Chemilum.	2	ppm wt	ASTM D-4629	2/28/03	JT

Approved By: _____
Jean Waits
Supervising Chemist

The analytical results, opinions or interpretations contained in this report are based upon information and material supplied by the client for whose exclusive and confidential use this report has been made. The analytical results, opinions or interpretations expressed represent the best judgment of Core Laboratories. Core Laboratories, however, makes no warranty or representation, express or implied, of any type, and expressly disclaims same as to the productivity, proper operations or profitableness of any oil, gas, coal, or other mineral, property, well or sand in connection with which such report is used or relied upon for any reason whatsoever. This report shall not be reproduced, in whole or in part, without the written approval of Core Laboratories.

Core Lab
PETROLEUM SERVICES

8210 Mosley Rd.
Houston, TX 77075
713-943-9776 Telephone
713-943-3846 Facsimile

CORE LABORATORIES

#3 (200-300) **ASTM D-6623** **130818-10**

Component Name	WT %	LV %	Mol %
Ethane	0.02	0.04	0.07
Propane	0.44	0.65	1.02
Isobutane	0.48	0.63	0.84
Isobutylene	0.01	0.01	0.02
N-Butane	1.34	1.71	2.35
2,2-Dimethylpropane	0.01	0.01	0.01
Isopentane	1.63	1.94	2.30
1-Pentene	0.01	0.01	0.01
N-Pentane	1.76	2.08	2.49
Cis-2-pentene	0.01	0.01	0.01
2,2-Dimethylbutane	0.12	0.14	0.14
Cyclopentane	0.29	0.29	0.42
2,3-Dimethylbutane	0.32	0.36	0.38
2-Methylpentane	1.70	1.92	2.01
3-Methylpentane	1.18	1.31	1.40
2-Methyl-1-pentene	0.01	0.01	0.01
N-Hexane	3.08	3.45	3.64
2,2-Dimethylpentane	0.18	0.20	0.18
Methylcyclopentane	2.37	2.34	2.87
2,4-Dimethylpentane	0.30	0.33	0.31
2,2,3-Trimethylbutane	0.05	0.05	0.05
Benzene	0.93	0.78	1.21
3,3-Dimethylpentane	0.11	0.12	0.11
Cyclohexane	3.27	3.10	3.96
2-Methylhexane	2.14	2.33	2.18
2,3-Dimethylpentane	0.57	0.61	0.58
1,1-Dimethylcyclopentane	0.44	0.43	0.46
3-Methylhexane	2.22	2.39	2.26
Cis-1,3-dimethylcyclopentane	0.78	0.77	0.81
Trans-1,3-dimethylcyclopentane	0.75	0.74	0.78
3-Ethylpentane	0.15	0.16	0.15
Trans-1,2-dimethylcyclopentane	1.16	1.14	1.20
2,2,4-Trimethylpentane	0.02	0.02	0.02
N-Heptane	5.23	5.65	5.33
Methylcyclohexane	10.47	10.04	10.89
1,1,3-Trimethylcyclopentane	0.59	0.58	0.54
Ethylcyclopentane	0.37	0.36	0.38
2,5-Dimethylhexane	0.42	0.45	0.37
2,4-Dimethylhexane	0.48	0.51	0.43
Trans,cis-1,2,4-trimethylcyclopentane	0.45	0.45	0.41
3,3-Dimethylhexane	0.14	0.15	0.12
Trans,cis-1,2,3-trimethylcyclopentane	0.39	0.38	0.35
2,3,4-Trimethylpentane	0.04	0.04	0.04

Core Lab
PETROLEUM SERVICES

8210 Mosley Rd.
Houston, TX 77075
713-943-9776 Telephone
713-943-3846 Facsimile

CORE LABORATORIES

#31200-3001 **ASTM D-6623** **130818-10**

Component Name	WT %	LV %	Mol %
Toluene	6.69	5.70	7.41
2,3-Dimethylhexane	0.46	0.48	0.41
2-Methyl-3-Ethylpentane	0.05	0.05	0.04
1,1,2-trimethylcyclopentane	0.01	0.01	0.01
2-Methylheptane	2.43	2.57	2.17
4-Methylheptane	0.84	0.88	0.75
3,4-Dimethylhexane	0.07	0.07	0.06
Cis,trans,1,2,4-trimethylcyclopentane	0.07	0.07	0.06
Cis-1,3 dimethylcyclohexane	2.71	2.62	2.46
3-Methylheptane	1.94	2.03	1.73
Trans-1,4-dimethylcyclohexane	1.10	1.07	1.00
1,1-Dimethylcyclohexane	0.37	0.35	0.34
Trans-1-ethyl-3-methylcyclopentane	0.16	0.16	0.15
Cis-1-ethyl-3-methylcyclopentane	0.10	0.10	0.09
Trans-1-ethyl-2-methylcyclopentane	0.17	0.16	0.15
1-Ethyl-1-methylcyclopentane	0.05	0.05	0.05
Trans-1,2,dimethylcyclohexane	1.01	0.96	0.92
Trans-1,3,dimethylcyclohexane	0.01	0.01	0.01
N-Octane	5.94	6.24	5.31
Isopropylcyclopentane	0.06	0.06	0.05
2,3,5-Trimethylhexane	0.05	0.05	0.04
Cis-1-ethyl-2-methylcyclopentane	0.02	0.02	0.02
2,2-Dimethylheptane	0.18	0.19	0.14
Cis-1,2-dimethylcyclohexane	0.17	0.16	0.15
2,4-Dimethylheptane	0.39	0.40	0.31
4,4-Dimethylheptane	0.03	0.03	0.02
Ethylcyclohexane	1.71	1.61	1.55
Cis,cis,1-3-5,trimethylcyclohexane	0.02	0.02	0.02
2,6-Dimethylheptane	0.57	0.59	0.45
1,1,3-Trimethylcyclohexane	0.45	0.43	0.36
C9 Naphthenes	0.43	0.41	0.35
2,5-Dimethylheptane	0.80	0.82	0.64
3,5-Dimethylheptane	0.19	0.20	0.15
Ethylbenzene	0.66	0.56	0.63
Trans,trans,1,2,4-trimethylcyclohexane	0.36	0.35	0.29
Cis,trans,1,3,5-trimethylcyclohexane	0.03	0.03	0.02
Meta-Xylene	4.09	3.50	3.93
Para-Xylene	1.27	1.09	1.22
2,3-Dimethylheptane	0.41	0.42	0.33
3,4-Dimethylheptane D/L	0.05	0.05	0.04
3,4-Dimethylheptane L/D	0.21	0.21	0.17
4-Methyloctane	0.69	0.71	0.55
2-Methyloctane	0.89	0.92	0.71

Core Lab
PETROLEUM SERVICES

8210 Mosley Rd.
Houston, TX 77076
713-943-9776 Telephone
713-943-3846 Facsimile

CORE LABORATORIES

#3 (200-300) **ASTM D-6623** **130818-10**

Component Name	WT %	LV %	Mol %
Cis,cis,1,2,3,trimethylcyclohexane	0.06	0.06	0.05
3-Ethylheptane	0.19	0.20	0.15
3-Methyloctane	0.91	0.93	0.72
Ortho-Xylene	1.22	1.03	1.17
Trans-1-Methyl-2-propylcyclopentane	0.03	0.03	0.02
Cis-1-ethyl-3-methylcyclohexane	0.08	0.07	0.06
Trans-1-ethyl-4-methylcyclohexane	0.50	0.46	0.40
Isobutylcyclopentane	0.34	0.32	0.27
1-Ethyl-1-methylcyclohexane	0.03	0.03	0.02
Cis,trans,1,2,3,trimethylcyclohexane	0.07	0.07	0.06
N-Nonane	2.89	2.98	2.30
Trans-1-ethyl-3-methylcyclohexane	0.24	0.23	0.19
Trans-1-ethyl-2-methylcyclohexane	0.09	0.09	0.07
Isopropylbenzene	0.09	0.08	0.08
2,2-Dimethyloctane	0.23	0.23	0.16
Isopropylcyclohexane	0.09	0.08	0.07
Cis-1-ethyl-2-methylcyclohexane	0.04	0.04	0.03
2,4-Dimethyloctane	0.23	0.24	0.16
2,6-Dimethyloctane	0.34	0.35	0.24
2,5-Dimethyloctane	0.07	0.07	0.05
N-propylcyclohexane	0.54	0.50	0.44
N-butylcyclopentane	0.11	0.10	0.09
2,7-Dimethyloctane	0.04	0.04	0.03
n-Propylbenzene	0.25	0.21	0.21
3,6-Dimethyloctane	0.06	0.06	0.04
1-Methyl-3-ethylbenzene	0.38	0.33	0.32
1-Methyl-4-ethylbenzene	0.18	0.15	0.15
1,3,5-Trimethylbenzene	0.42	0.36	0.36
4-Ethyloctane	0.06	0.06	0.04
5-Methylnonane	0.12	0.12	0.09
4-Methylnonane	0.18	0.18	0.13
1-Methyl-2-ethylbenzene	0.15	0.13	0.13
2-Methylnonane	0.12	0.12	0.09
3-Ethyloctane	0.04	0.04	0.03
1,2,3,5 Tet-methylcyclohexane	0.02	0.02	0.01
3-Methylnonane	0.21	0.21	0.15
1,2,3,4 Tet-methylcyclohexane	0.03	0.03	0.02
C10 Naphthenes	0.06	0.06	0.04
C10 Paraffin	0.01	0.01	0.01
1,2,4-Trimethylbenzene	0.45	0.38	0.38
Cis-1-methyl-3-propylcyclohexane	0.09	0.08	0.07
Trans 1,4 diethylcyclohexane	0.08	0.08	0.06
Trans-1-methyl-3-propylcyclohexane	0.01	0.01	0.01

Core Lab
PETROLEUM SERVICES

8210 Mosley Rd.
Houston, TX 77075
713-943-9776 Telephone
713-943-3846 Facsimile

CORE LABORATORIES

#3 (200-300) **ASTM D-6623** **130818-10**

Component Name	WT %	LV %	Mol %
1-Ethyl-2,3-dimethylcyclohexane	0.01	0.01	0.01
Isobutylbenzene	0.04	0.03	0.03
Cis-1-methyl-4-propylcyclohexane	0.02	0.02	0.01
N-Decane	0.72	0.73	0.52
1,2,3,4 Tet-methylcyclohexane	0.01	0.01	0.01
1,2,3-Trimethylbenzene	0.08	0.07	0.07
1-Methyl-3-isopropylbenzene	0.03	0.03	0.02
Cis 1,4 diethylcyclohexane	0.02	0.02	0.01
1-Methyl-4-isopropylbenzene	0.02	0.02	0.02
Indan (2,3-Dihydroindene)	0.03	0.02	0.03
Sec-butylcyclohexane	0.10	0.09	0.07
Butylcyclohexane	0.07	0.06	0.05
1,3-Diethylbenzene	0.03	0.03	0.02
C11 Naphthenes	0.02	0.02	0.01
1-Methyl-3-n-propylbenzene	0.06	0.05	0.05
1,4-Diethylbenzene	0.03	0.03	0.02
1,3-Dimethyl-5-ethylbenzene	0.03	0.03	0.02
1-Methyl-2-n-propylbenzene	0.01	0.01	0.01
Cis 1-methyl 4-ter-butylcyclohexane	0.03	0.03	0.02
C11 Paraffins	0.05	0.05	0.03
4-Methyldecane	0.03	0.03	0.02
5-Methyldecane	0.03	0.03	0.02
1,4-Dimethyl-2-ethylbenzene	0.05	0.04	0.04
1,3-Dimethyl-4-ethylbenzene	0.02	0.02	0.02
3-Methyldecane	0.03	0.03	0.02
1,2-Dimethyl-4-ethylbenzene	0.02	0.02	0.01
Tricyclodecane	0.01	0.01	0.01
1-Methylindan	0.01	0.01	0.01
1,2-Dimethyl-3-Ethylbenzene	0.01	0.01	0.01
N-Undecane	0.18	0.18	0.12
1,2,4,5-Tetramethylbenzene	0.01	0.01	0.01
1,2,3,5-Tetramethylbenzene	0.01	0.01	0.01
C11 Unidentified	0.02	0.02	0.01
4-Methylindan	0.01	0.01	0.01
1,2,3,4-Tetramethylbenzene	0.01	0.01	0.01
6-Methylundecane	0.01	0.01	0.01
4-Methylundecane	0.01	0.01	0.01
Naphthalene	0.01	0.01	0.01
C11 Aromatic	0.05	0.04	0.03
N-Dodecane	0.06	0.06	0.04
Dodecanes	0.05	0.04	0.03
2-Methylnaphthalene	0.01	0.01	0.01
Tridecanes	0.03	0.03	0.02

Core Lab
PETROLEUM SERVICES

8210 Mosley Rd.
Houston, TX 77075
713-943-9776 Telephone
713-943-3846 Facsimile

CORE LABORATORIES

#3 (200-300) **ASTM D-6623** **130818-10**

Component Name	WT %	LV %	Mol %
N-Tridecane	0.03	0.03	0.02
Tetradecanes	0.05	0.05	0.03
N-Tetradecane	0.06	0.06	0.03
Pentadecanes	0.10	0.09	0.05
N-Pentadecane	0.09	0.09	0.04
Hexadecanes	0.19	0.17	0.09
N-Hexadecane	0.11	0.11	0.05
Heptadecanes	0.27	0.24	0.12
N-Heptadecane	0.12	0.11	0.05
Pristane	0.10	0.09	0.04
Octadecanes	0.23	0.20	0.09
N-Octadecane	0.15	0.14	0.06
Phytane	0.09	0.08	0.03
Nonadecanes	0.17	0.15	0.07
N-Nonadecane	0.12	0.11	0.05
Eicosanes	0.08	0.07	0.03
N-Eicosane	0.09	0.08	0.03
Heneicosanes	0.09	0.08	0.03
Docosanes	0.05	0.04	0.02
Tricosanes	0.02	0.02	0.01
Tetracosanes	0.01	0.01	0.00
Unidentified	0.00	0.00	0.00
	100.00	100.00	100.00

Mol WT of Sample	101.98
Mol WT C6 Plus	105.81
Density of Sample	0.7444
Density C6 Plus	0.7555

Summary by Group

Totals	Group	%Wt	% Vol
	Paraffin	21.14	23.02
	Isoparaf.	25.47	27.35
	Olefin	0.04	0.04
	Naphthene	33.14	31.90
	Aromatic	17.36	14.82
	Oxygenates		
*	Unidentified	2.85	2.87

Core Lab
PETROLEUM SERVICES

8210 Mosley Rd.
Houston, TX 77075
713-943-9776 Telephone
713-943-3846 Facsimile

CORE LABORATORIES

#3 (200-300) **ASTM D-6623** **130818-10**

Summary by Carbon

Totals	Group	%Wt	% Vol
	C4	1.83	2.35
	C5	3.71	4.34
	C6	12.98	13.41
	C7	31.61	31.02
	C8	29.22	28.49
	C9	13.99	13.75
	C10	3.37	3.34
	C11	0.44	0.43

Composite by Carbon

Group	C#	%Wt	% Vol
Paraffin	C4	1.34	1.71
	C5	1.76	2.08
	C6	3.08	3.45
	C7	5.23	5.65
	C8	5.94	6.24
	C9	2.89	2.98
	C10	0.72	0.73
	C11	0.18	0.18
Isoparaf.	C4	0.48	0.63
	C5	1.64	1.95
	C6	3.32	3.73
	C7	5.72	6.19
	C8	6.89	7.25
	C9	5.56	5.72
	C10	1.71	1.73
	C11	0.15	0.15
Olefin	C4	0.01	0.01
	C5	0.02	0.02
	C6	0.01	0.01
	C7	0.00	0.00
	C8	0.00	0.00
	C9	0.00	0.00
	C10	0.00	0.00
	C11		

Core Lab
PETROLEUM SERVICES

8210 Mosley Rd.
Houston, TX 77075
713-943-9776 Telephone
713-943-3846 Facsimile

CORE LABORATORIES

#3 (200-300) **ASTM D-6623** **130818-10**

Naphthene	C4		
	C5	0.29	0.29
	C6	5.64	5.44
	C7	13.97	13.48
	C8	9.15	8.82
	C9	3.51	3.32
	C10	0.53	0.50
	C11	0.05	0.05
Aromatic	C4		
	C5		
	C6	0.93	0.78
	C7	6.69	5.70
	C8	7.24	6.18
	C9	2.03	1.73
	C10	0.41	0.38
	C11	0.06	0.05

	%Wt	% Vol
Benzene	0.93	0.78

The analytical results , opinions or interpretations contained in this report are based upon information and material supplied by the client for whose exclusive and confidential use this report has been made. The analytical results, opinions, or interpretations expressed represent the best judgement of Core Laboratories. Core Laboratories, however, makes no warranty or representation, expressed or implied, of any type, and expressly disclaims same as to the productivity, proper operations or profitableness of any oil, gas, coal, or other mineral property, well or sand in connection with such report is used or relied upon for any reason whatsoever. The report shall not be reproduced, in whole or in part, without the written approval of Core Laboratories.

Core Lab
PETROLEUM SERVICES

8210 Mosley Rd.
Houston, TX 77075
713 943-9776 Telephone
713 943-3846 Facsimile

CORE LABORATORIES

JOHN I FALKNER
FALKNER-RED RIVER LABS

1039 PEARL DRIVE
BOSSIER CITY, LA 71111

Sample Number: 130818-011
Sample Date:
Date Reported: 3/6/03
Date Received: 2/25/03
Sample ID: #3 (300-350)
Description:

Analytical Report

Test	Result	Units	Method	Date	Analyst
Capillary Gas Chromatography	Attached		ASTM D-5134 Mod	2/27/03	PKT
Naphthalenes in Jet Fuel	0.11	WT %	ASTM D-1840	2/28/03	VS

Approved By: Jean Waits
Supervising Chemist

The analytical results, opinions or interpretations contained in this report are based upon information and material supplied by the client for whose exclusive and confidential use this report has been made. The analytical results, opinions or interpretations expressed represent the best judgment of Core Laboratories. Core Laboratories, however, makes no warranty or representation, express or implied, of any type, and expressly disclaims same as to the productivity, proper operations or profitableness of any oil, gas, coal, or other mineral, property, well or sand in connection with which such report is used or relied upon for any reason whatsoever. This report shall not be reproduced, in whole or in part, without the written approval of Core Laboratories.

Core Lab
PETROLEUM SERVICES

8210 Mosley Rd.
Houston, TX 77075
713-943-9776 Telephone
713-943-3846 Facsimile

CORE LABORATORIES

#3 (300-350) **ASTM D-6623** **130818-11**

Component Name	WT %	LV %	Mol %
Ethane	0.01	0.02	0.04
Propane	0.15	0.23	0.42
Isobutane	0.10	0.14	0.21
N-Butane	0.22	0.29	0.47
Isopentane	0.14	0.18	0.24
N-Pentane	0.12	0.15	0.21
2,2-Dimethylbutane	0.01	0.01	0.01
Cyclopentane	0.01	0.01	0.02
2,3-Dimethylbutane	0.01	0.01	0.01
2-Methylpentane	0.06	0.07	0.09
3-Methylpentane	0.04	0.05	0.06
N-Hexane	0.09	0.11	0.13
2,2-Dimethylpentane	0.01	0.01	0.01
Methylcyclopentane	0.07	0.07	0.10
2,4-Dimethylpentane	0.01	0.01	0.01
Benzene	0.03	0.03	0.05
Cyclohexane	0.10	0.10	0.15
2-Methylhexane	0.06	0.07	0.07
2,3-Dimethylpentane	0.02	0.02	0.02
1,1-Dimethylcyclopentane	0.02	0.02	0.03
3-Methylhexane	0.07	0.08	0.09
Cis-1,3-dimethylcyclopentane	0.03	0.03	0.04
Trans-1,3-dimethylcyclopentane	0.03	0.03	0.04
Trans-1,2-dimethylcyclopentane	0.05	0.05	0.06
N-Heptane	0.23	0.26	0.29
Methylcyclohexane	0.91	0.92	1.16
1,1,3-Trimethylcyclopentane	0.06	0.06	0.07
Ethylcyclopentane	0.04	0.04	0.05
2,5-Dimethylhexane	0.04	0.04	0.04
2,4-Dimethylhexane	0.06	0.07	0.07
Trans,cis-1,2,4-trimethylcyclopentane	0.07	0.07	0.08
3,3-Dimethylhexane	0.02	0.02	0.02
Trans,cis-1,2,3-trimethylcyclopentane	0.06	0.06	0.07
2,3,4-Trimethylpentane	0.01	0.01	0.01
Toluene	0.75	0.67	1.02
2,3-Dimethylhexane	0.10	0.11	0.11
2-Methyl-3-Ethylpentane	0.01	0.01	0.01
2-Methylheptane	0.56	0.62	0.61
4-Methylheptane	0.22	0.24	0.24
Cis,trans,1,2,4-trimethylcyclopentane	0.02	0.02	0.02
Cis-1,3 dimethylcyclohexane	1.10	1.11	1.22
3-Methylheptane	0.45	0.49	0.49
Trans-1,4-dimethylcyclohexane	0.44	0.45	0.49

Core Lab
PETROLEUM SERVICES

8210 Mosley Rd.
Houston, TX 77075
713-943-9776 Telephone
713-943-3846 Facsimile

CORE LABORATORIES

#8 (300-350) **ASTM D-6623** **130818-11**

Component Name	WT %	LV %	Mol %
1,1-Dimethylcyclohexane	0.15	0.15	0.17
Trans-1-ethyl-3-methylcyclopentane	0.06	0.06	0.07
Cis-1-ethyl-3-methylcyclopentane	0.04	0.04	0.04
Trans-1-ethyl-2-methylcyclopentane	0.07	0.07	0.08
1-Ethyl-1-methylcyclopentane	0.02	0.02	0.02
Trans-1,2,dimethylcyclohexane	0.56	0.56	0.62
N-Octane	2.81	3.11	3.07
Isopropylcyclopentane	0.04	0.04	0.04
2,3,5-Trimethylhexane	0.03	0.03	0.03
Cis-1-ethyl-2-methylcyclopentane	0.01	0.01	0.01
2,2-Dimethylheptane	0.14	0.15	0.14
Cis-1,2-dimethylcyclohexane	0.16	0.16	0.18
2,4-Dimethylheptane	0.33	0.36	0.32
4,4-Dimethylheptane	0.04	0.04	0.04
Ethylcyclohexane	1.73	1.70	1.92
Cis,cis,1-3-5,trimethylcyclohexane	0.02	0.02	0.02
2,6-Dimethylheptane	0.54	0.59	0.53
1,1,3-Trimethylcyclohexane	0.62	0.62	0.61
C9 Naphthenes	0.88	0.88	0.87
2,5-Dimethylheptane	0.90	0.97	0.88
3,5-Dimethylheptane	0.21	0.23	0.20
Ethylbenzene	0.67	0.60	0.79
Trans,trans.1,2,4-trimethylcyclohexane	0.71	0.71	0.70
Cis,trans,1,3,5-trimethylcyclohexane	0.06	0.06	0.06
Meta-Xylene	5.45	4.90	6.40
Para-Xylene	1.63	1.47	1.92
2,3-Dimethylheptane	0.64	0.68	0.62
3,4-Dimethylheptane D/L	0.09	0.10	0.09
3,4-Dimethylheptane L/D	0.34	0.36	0.33
4-Methyloctane	1.24	1.33	1.21
2-Methyloctane	1.68	1.83	1.63
Cis,cis,1,2,3,trimethylcyclohexane	0.12	0.12	0.12
3-Ethylheptane	0.44	0.48	0.43
3-Methyloctane	1.91	2.06	1.88
Ortho-Xylene	2.52	2.22	2.96
Trans-1-Methyl-2-propylcyclopentane	0.08	0.08	0.08
Cis-1-ethyl-3-methylcyclohexane	0.24	0.23	0.24
Trans-1-ethyl-4-methylcyclohexane	1.61	1.56	1.59
Isobutylcyclopentane	1.12	1.11	1.11
1-Ethyl-1-methylcyclohexane	0.10	0.10	0.10
Cis,trans,1,2,3,trimethylcyclohexane	0.26	0.26	0.26
Trans,trans,1,2,3,trimethylcyclohexane	0.11	0.11	0.11
N-Nonane	9.77	10.59	9.49

Core Lab
PETROLEUM SERVICES

8210 Mosley Rd.
Houston, TX 77075
713-943-9776 Telephone
713-943-3846 Facsimile

CORE LABORATORIES

#3 (300-350) **ASTM D-6623** **130818-11**

Component Name	WT %	LV %	Mol %
Trans-1-ethyl-3-methylcyclohexane	1.03	1.02	1.02
Trans-1-ethyl-2-methylcyclohexane	0.37	0.37	0.37
Cis-1-ethyl-4-methylcyclohexane	0.01	0.01	0.01
Isopropylbenzene	0.33	0.30	0.34
2,2-Dimethyloctane	1.00	1.07	0.88
Isopropylcyclohexane	0.45	0.44	0.44
Cis-1-ethyl-2-methylcyclohexane	0.19	0.19	0.19
2,4-Dimethyloctane	1.10	1.19	0.96
2,6-Dimethyloctane	2.00	2.13	1.75
2,5-Dimethyloctane	0.36	0.39	0.32
N-propylcyclohexane	2.87	2.81	2.84
N-butylcyclopentane	0.60	0.59	0.59
2,7-Dimethyloctane	0.21	0.23	0.18
n-Propylbenzene	1.49	1.34	1.55
3,6-Dimethyloctane	0.37	0.39	0.32
1-Methyl-3-ethylbenzene	2.31	2.07	2.40
1-Methyl-4-ethylbenzene	1.21	1.09	1.26
1,3,5-Trimethylbenzene	3.50	3.14	3.63
5-Methylnonane	0.90	0.95	0.79
4-Methylnonane	1.39	1.48	1.22
1-Methyl-2-ethylbenzene	1.22	1.08	1.27
2-Methylnonane	0.90	0.96	0.79
3-Ethyloctane	0.35	0.37	0.31
1,2,3,5 Tet-methylcyclohexane	0.14	0.14	0.12
3-Methylnonane	1.70	1.80	1.49
1,2,3,4 Tet-methylcyclohexane	0.27	0.27	0.24
C10 Naphthenes	0.58	0.57	0.52
C10 Paraffin	0.23	0.24	0.18
1,2,4-Trimethylbenzene	3.86	3.42	4.01
Cis-1-methyl-3-propylcyclohexane	0.76	0.75	0.68
Trans 1,4 diethylcyclohexane	0.72	0.71	0.64
Trans-1-methyl-3-propylcyclohexane	0.11	0.11	0.10
1-Ethyl-2,3-dimethylcyclohexane	0.10	0.10	0.09
Isobutylbenzene	0.36	0.33	0.33
Cis-1-methyl-4-propylcyclohexane	0.18	0.18	0.16
N-Decane	6.78	7.24	5.95
1,2,3,4 Tet-methylcyclohexane	0.16	0.16	0.14
Trans 1,3 diethylcyclohexane	0.07	0.07	0.06
1,2,3-Trimethylbenzene	0.73	0.63	0.76
Trans 1,2 diethylcyclohexane	0.08	0.08	0.07
1-Methyl-3-isopropylbenzene	0.29	0.26	0.27
Cis 1,4 diethylcyclohexane	0.14	0.14	0.12
1-Methyl-4-isopropylbenzene	0.15	0.14	0.14

Core Lab
PETROLEUM SERVICES

8210 Mosley Rd.
Houston, TX 77075
713-943-9776 Telephone
713-943-3846 Facsimile

CORE LABORATORIES

#3 (300-350) **ASTM D-6623** **130818-11**

Component Name	WT %	LV %	Mol %
Indan (2,3-Dihydroindene)	0.27	0.22	0.29
Sec-butylcyclohexane	0.95	0.94	0.85
Butylcyclohexane	0.63	0.61	0.56
1,3-Diethylbenzene	0.32	0.29	0.30
C11 Naphthenes	0.25	0.24	0.20
1-Methyl-3-n-propylbenzene	0.65	0.59	0.60
1,4-Diethylbenzene	0.30	0.27	0.28
1,3-Dimethyl-5-ethylbenzene	0.30	0.27	0.28
1,2-Diethylbenzene	0.08	0.07	0.07
1-Methyl-2-n-propylbenzene	0.14	0.12	0.13
Cis 1-methyl 4-ter-butylcyclohexane	0.30	0.29	0.24
C11 Paraffins	0.55	0.57	0.44
4-Methyldecane	0.31	0.32	0.25
5-Methyldecane	0.25	0.26	0.20
1,4-Dimethyl-2-ethylbenzene	0.45	0.40	0.42
1,3-Dimethyl-4-ethylbenzene	0.21	0.19	0.20
3-Methyldecane	0.26	0.27	0.21
1,2-Dimethyl-4-ethylbenzene	0.21	0.18	0.20
1,3-Dimethyl-2-ethylbenzene	0.05	0.04	0.05
Tricyclodecane	0.14	0.14	0.13
1,2-Dimethyl-3-Ethylbenzene	0.10	0.09	0.09
N-Undecane	1.60	1.68	1.28
1,2,4,5-Tetramethylbenzene	0.08	0.07	0.07
1,2,3,5-Tetramethylbenzene	0.11	0.10	0.10
C11 Unidentified	0.60	0.59	0.47
4-Methylindan	0.07	0.06	0.07
5-Methylindan	0.04	0.03	0.04
1,2,3,4-Tetramethylbenzene	0.06	0.05	0.06
6-Methylundecane	0.12	0.12	0.09
4-Methylundecane	0.05	0.05	0.04
Naphthalene	0.05	0.04	0.05
3-Methylundecane	0.01	0.01	0.01
C11 Aromatic	0.44	0.40	0.37
N-Dodecane	0.39	0.40	0.29
Dodecanes	0.69	0.62	0.53
2-Methylnaphthalene	0.03	0.02	0.03
1-Methylnaphthalene	0.02	0.02	0.02
Tridecanes	0.17	0.16	0.12
N-Tridecane	0.13	0.13	0.09
Tetradecanes	0.07	0.07	0.05
N-Tetradecane	0.06	0.06	0.04
Pentadecanes	0.05	0.05	0.03
N-Pentadecane	0.03	0.03	0.02

Core Lab
PETROLEUM SERVICES

8210 Mosley Rd.
Houston, TX 77075
713-943-9776 Telephone
713-943-3846 Facsimile

CORE LABORATORIES

#3 (300-350) **ASTM D-6623** **130818-11**

Component Name	WT %	LV %	Mol %
Hexadecanes	0.02	0.02	0.01
N-Hexadecane	0.02	0.02	0.01
N-Heptadecane	0.01	0.01	0.01
Pristane	0.01	0.01	0.00
N-Octadecane	0.01	0.01	0.00
Nonadecanes	0.01	0.01	0.00
	100.00	100.00	100.00

Mol WT of Sample	124.82
Mol WT C6 Plus	125.92
Density of Sample	0.7812
Density C6 Plus	0.7834

Summary by Group

Totals

Group	%Wt	% Vol
Paraffin	21.62	23.43
Isoparaf.	22.53	24.21
Olefin	0.00	0.00
Naphthene	22.88	22.64
Aromatic	30.48	27.22
Oxygenates		
Unidentified	2.49	2.50

Summary by Carbon

Totals

Group	%Wt	% Vol
C4	0.32	0.43
C5	0.27	0.34
C6	0.41	0.45
C7	2.23	2.21
C8	19.14	18.49
C9	44.87	44.38
C10	26.34	27.01
C11	4.13	4.19

Core Lab
PETROLEUM SERVICES

8210 Mosley Rd.
Houston, TX 77075
713-943-9776 Telephone
713-943-3846 Facsimile

CORE LABORATORIES

#3(300-350) **ASTM D-6623** **130818-11**

Composite by Carbon

Group	C#	%Wt	% Vol
Paraffin	C4	0.22	0.29
	C5	0.12	0.15
	C6	0.09	0.11
	C7	0.23	0.26
	C8	2.81	3.11
	C9	9.77	10.59
	C10	6.78	7.24
	C11	1.60	1.68
Isoparaf.	C4	0.10	0.14
	C5	0.14	0.18
	C6	0.12	0.14
	C7	0.17	0.19
	C8	1.47	1.61
	C9	8.53	9.21
	C10	10.51	11.20
	C11	1.49	1.54
Olefin	C4	0.00	0.00
	C5	0.00	0.00
	C6	0.00	0.00
	C7	0.00	0.00
	C8	0.00	0.00
	C9	0.00	0.00
	C10	0.00	0.00
	C11		
Naphthene	C4		
	C5	0.01	0.01
	C6	0.17	0.17
	C7	1.08	1.09
	C8	4.59	4.58
	C9	11.45	11.29
	C10	5.03	4.97
	C11	0.55	0.53

Core Lab
PETROLEUM SERVICES

8210 Mosley Rd.
Houston, TX 77075
713-943-9776 Telephone
713-943-3846 Facsimile

CORE LABORATORIES

[redacted] **ASTM D-6623** **130818-11**

Aromatic	C4		
	C5		
	C6	0.03	0.03
	C7	0.75	0.67
	C8	10.27	9.19
	C9	14.92	13.29
	C10	4.02	3.60
	C11	0.49	0.44

	%Wt	% Vol
Benzene	0.03	0.03

The analytical results , opinions or interpretations contained in this report are based upon information and material supplied by the client for whose exclusive and confidential use this report has been made. The analytical results, opinions, or interpretations expressed represent the best judgement of Core Laboratories. Core Laboratories, however, makes no warranty or representation, expressed or implied, of any type, and expressly disclaims same as to the productivity, proper operations or profitableness of any oil, gas, coal, or other mineral property, well or sand in connection with such report is used or relied upon for any reason whatsoever. The report shall not be reproduced, in whole or in part, without the written approval of Core Laboratories.

8210 Mosley Rd.
Houston, TX 77075
713-943-9776 Telephone
713-943-3846 Facsimile

CORE LABORATORIES

Sample #3 (350-500) **ASTM D-6623** **132072-1**

Component Name	WT %	LV %	Mol %
Propane	0.04	0.06	0.15
Isobutane	0.01	0.01	0.03
N-Butane	0.02	0.03	0.06
Isopentane	0.01	0.01	0.02
Methylcyclohexane	0.01	0.01	0.02
Toluene	0.01	0.01	0.02
3-Methylheptane	0.02	0.02	0.03
Trans-1,4-dimethylcyclohexane	0.01	0.01	0.01
Trans-1,2,dimethylcyclohexane	0.01	0.01	0.01
N-Octane	0.03	0.03	0.04
Ethylcyclohexane	0.03	0.03	0.04
2,6-Dimethylheptane	0.01	0.01	0.01
1,1,3-Trimethylcyclohexane	0.02	0.02	0.03
C9 Naphthenes	0.04	0.04	0.05
2,5-Dimethylheptane	0.01	0.01	0.01
Ethylbenzene	0.01	0.01	0.02
Trans,trans,1,2,4-trimethylcyclohexane	0.02	0.02	0.03
Meta-Xylene	0.14	0.13	0.21
Para-Xylene	0.04	0.04	0.06
2,3-Dimethylheptane	0.02	0.02	0.03
3,4-Dimethylheptane D/L	0.01	0.01	0.01
4-Methyloctane	0.03	0.03	0.04
2-Methyloctane	0.05	0.06	0.06
3-Ethylheptane	0.02	0.02	0.03
3-Methyloctane	0.06	0.07	0.08
Ortho-Xylene	0.09	0.08	0.14
Cis-1-ethyl-3-methylcyclohexane	0.02	0.02	0.03
Trans-1-ethyl-4-methylcyclohexane	0.11	0.11	0.14
Isobutylcyclopentane	0.08	0.08	0.10
Cis,trans,1,2,3,trimethylcyclohexane	0.02	0.02	0.03
Trans,trans,1,2,3,trimethylcyclohexane	0.01	0.01	0.01
N-Nonane	0.57	0.64	0.71
Trans-1-ethyl-3-methylcyclohexane	0.11	0.11	0.14
Trans-1-ethyl-2-methylcyclohexane	0.04	0.04	0.05
Isopropylbenzene	0.02	0.02	0.03
2,2-Dimethyloctane	0.06	0.07	0.07
Isopropylcyclohexane	0.10	0.10	0.13
Cis-1-ethyl-2-methylcyclohexane	0.02	0.02	0.03
2,4-Dimethyloctane	0.13	0.15	0.15
2,6-Dimethyloctane	0.34	0.38	0.38
2,5-Dimethyloctane	0.06	0.07	0.07
N-propylcyclohexane	0.39	0.40	0.50
N-butylcyclopentane	0.09	0.09	0.11

FROM : Falkner/RedRiverLabs FAX NO. : 318-742-1448 Jun. 05 2003 02:28PM P2

8210 Mosley Rd.
Houston, TX 77075
713-943-9776 Telephone
713-943-3846 Facsimile

CORE LABORATORIES

Sample #3 (350-500) **ASTM D-6623** **132072-1**

Component Name	WT %	LV %	Mol %
2,7-Dimethyloctane	0.03	0.03	0.03
n-Propylbenzene	0.26	0.24	0.35
3,6-Dimethyloctane	0.07	0.08	0.08
1-Methyl-3-ethylbenzene	0.41	0.38	0.55
1-Methyl-4-ethylbenzene	0.27	0.25	0.36
2,3-Dimethyloctane	0.11	0.12	0.12
1,3,5-Trimethylbenzene	0.73	0.68	0.98
4-Ethyloctane	0.11	0.12	0.12
5-Methylnonane	0.21	0.23	0.24
4-Methylnonane	0.39	0.43	0.44
1-Methyl-2-ethylbenzene	0.26	0.24	0.35
2-Methylnonane	0.39	0.43	0.44
3-Ethyloctane	0.12	0.13	0.14
1,2,3,5 Tet-methylcyclohexane	0.06	0.06	0.07
3-Methylnonane	0.64	0.70	0.72
1,2,3,4 Tet-methylcyclohexane	0.14	0.14	0.16
C10 Naphthenes	0.24	0.25	0.28
C10 Paraffin	0.12	0.13	0.12
1,2,4-Trimethylbenzene	1.53	1.41	2.05
Cis-1-methyl-3-propylcyclohexane	0.45	0.46	0.52
Trans 1,4 diethylcyclohexane	0.43	0.44	0.49
Trans-1-methyl-3-propylcyclohexane	0.06	0.06	0.07
1-Ethyl-2,3-dimethylcyclohexane	0.06	0.06	0.07
Isobutylbenzene	0.24	0.23	0.29
Cis-1-methyl-4-propylcyclohexane	0.12	0.12	0.14
sec-Butylbenzene	0.15	0.14	0.18
N-Decane	4.14	4.57	4.68
1,2,3,4 Tet-methylcyclohexane	0.12	0.12	0.14
Trans 1,3 diethylcyclohexane	0.06	0.06	0.07
1,2,3-Trimethylbenzene	0.50	0.45	0.67
Trans 1,2 diethylcyclohexane	0.07	0.07	0.08
1-Methyl-3-isopropylbenzene	0.20	0.19	0.24
Cis 1,4 diethylcyclohexane	0.12	0.12	0.14
1-Methyl-4-isopropylbenzene	0.17	0.16	0.20
Indan (2,3-Dihydroindene)	0.25	0.21	0.34
Sec-butylcyclohexane	1.05	1.08	1.20
Butylcyclohexane	1.08	1.09	1.24
1,3-Diethylbenzene	0.42	0.39	0.50
C11 Naphthenes	0.71	0.72	0.74
1-Methyl-3-n-propylbenzene	0.63	0.59	0.75
1,4-Diethylbenzene	0.43	0.40	0.51
1,3-Dimethyl-5-ethylbenzene	0.47	0.44	0.56
1,2-Diethylbenzene	0.13	0.12	0.16

FROM : Falkner/RedRiverLabs FAX NO. : 318-742-1448 Jun. 05 2003 02:28PM P3

8210 Mosley Rd.
Houston, TX 77075
713-943-9776 Telephone
713-943-3846 Facsimile

CORE LABORATORIES

Sample #3 (350-500) **ASTM D-6623** **132072-1**

Component Name	WT %	LV %	Mol %
1-Methyl-2-n-propylbenzene	0.24	0.22	0.29
Cis 1-methyl 4-ter-butylcyclohexane	0.58	0.58	0.60
C11 Paraffins	0.30	0.32	0.31
4-Methyldecane	0.69	0.75	0.71
5-Methyldecane	0.51	0.55	0.52
1,4-Dimethyl-2-ethylbenzene	0.99	0.91	1.19
1,3-Dimethyl-4-ethylbenzene	0.46	0.42	0.55
3-Methyldecane	0.65	0.71	0.67
1,2-Dimethyl-4-ethylbenzene	0.50	0.46	0.60
1,3-Dimethyl-2-ethylbenzene	0.16	0.14	0.19
Tricyclodecane	0.51	0.51	0.60
1,2-Dimethyl-3-Ethylbenzene	0.34	0.31	0.41
N-Undecane	6.20	6.75	6.38
1,2,4,5-Tetramethylbenzene	0.34	0.31	0.41
1,2,3,5-Tetramethylbenzene	0.53	0.48	0.63
C11 Unidentified	1.72	1.74	1.72
4-Methylindan	0.38	0.32	0.46
5-Methylindan	0.33	0.28	0.40
1,2,3,4-Tetramethylbenzene	0.50	0.45	0.60
Tetralin	0.02	0.02	0.02
6-Methylundecane	1.16	1.25	1.09
4-Methylundecane	0.51	0.55	0.48
Pentylbenzene	0.11	0.10	0.12
Naphthalene	0.62	0.50	0.78
3-Methylundecane	0.18	0.19	0.17
C11 Aromatic	8.94	8.33	9.69
N-Dodecane	5.91	6.35	5.58
Dodecanes	5.86	5.48	5.80
Pentamethylbenzene	0.24	0.21	0.26
2-Methylnaphthalene	1.55	1.31	1.75
1-Methylnaphthalene	0.97	0.77	1.10
Tridecanes	6.77	6.76	6.22
N-Tridecane	5.43	5.78	4.73
Tetradecanes	8.47	8.35	7.17
N-Tetradecane	3.47	3.66	2.81
Pentadecanes	5.75	5.60	4.49
N-Pentadecane	1.82	1.91	1.38
Hexadecanes	2.11	2.04	1.53
N-Hexadecane	0.67	0.70	0.48
Heptadecanes	0.90	0.86	0.61
N-Heptadecane	0.32	0.33	0.21
Pristane	0.05	0.05	0.03
Octadecanes	0.42	0.40	0.26

FROM : Falkner/RedRiverLabs FAX NO. : 318-742-1448 Jun. 05 2003 02:29PM P4

8210 Mosley Rd.
Houston, TX 77075
713-943-9776 Telephone
713-943-3846 Facsimile

CORE LABORATORIES

Sample #3 (350-500) **ASTM D-6623** **132072-1**

Component Name	WT %	LV %	Mol %
135- N-Octadecane	0.16	0.17	0.10
Nonadecanes	0.18	0.17	0.11
N-Nonadecane	0.07	0.07	0.04
Eicosanes	0.02	0.02	0.01
N-Eicosane	0.04	0.04	0.02
Heneicosanes	0.02	0.02	0.01
Docosanes	0.02	0.02	0.01
Tricosanes	0.01	0.01	0.01
Tetracosanes	0.01	0.01	0.00
Unidentified	0.20	0.29	0.19
	100.00	100.00	100.00

Mol WT of Sample	160.74
Mol WT C6 Plus	161.02
Density of Sample	0.8102
Density C6 Plus	0.8106
RON	4.2
MON	3.7

Summary by Group

Totals

Group	%Wt	% Vol
Paraffin	10.96	12.02
Isoparaf.	6.34	6.92
Olefin	0.00	0.00
Naphthene	6.99	7.08
Aromatic	24.58	22.35
Oxygenates		
Unidentified	51.13	51.63

Summary by Carbon

Totals

Group	%Wt	% Vol
C4	0.03	0.04
C5	0.01	0.01
C6	0.00	0.00
C7	0.02	0.02
C8	0.38	0.36
C9	6.08	5.83
C10	19.74	19.76
C11	22.61	22.35

FROM : Falkner/RedRiverLabs FAX NO. : 318-742-1448 Jun. 05 2003 02:30PM P5

8210 Mosley Rd.
Houston, TX 77075
713-943-9776 Telephone
713-943-3846 Facsimile

CORE LABORATORIES

Sample #3 (350-500) **ASTM D-6623** **132072-1**

Composite by Carbon

Group	C#	%Wt	% Vol
Paraffin	C4	0.02	0.03
	C5	0.00	0.00
	C6	0.00	0.00
	C7	0.00	0.00
	C8	0.03	0.03
	C9	0.57	0.64
	C10	4.14	4.57
	C11	6.20	6.75
Isoparaf.	C4	0.01	0.01
	C5	0.01	0.01
	C6	0.00	0.00
	C7	0.00	0.00
	C8	0.02	0.02
	C9	0.21	0.23
	C10	2.78	3.07
	C11	3.31	3.58
Olefin	C4	0.00	0.00
	C5	0.00	0.00
	C6	0.00	0.00
	C7	0.00	0.00
	C8	0.00	0.00
	C9	0.00	0.00
	C10	0.00	0.00
	C11		
Naphthene	C4		
	C5	0.00	0.00
	C6	0.00	0.00
	C7	0.01	0.01
	C8	0.05	0.05
	C9	1.07	1.08
	C10	4.57	4.64
	C11	1.29	1.30

FROM : Falkner/RedRiverLabs FAX NO. : 318-742-1448 Jun. 05 2003 02:30PM P6

8210 Mosley Rd.
Houston, TX 77075
713-943-9776 Telephone
713-943-3846 Facsimile

CORE LABORATORIES

Sample #3 (350-500) **ASTM D-6623** **132072-1**

Aromatic	C4		
	C5		
	C6	0.00	0.00
	C7	0.01	0.01
	C8	0.28	0.26
	C9	4.23	3.88
	C10	8.25	7.48
	C11	11.81	10.72

The analytical results , opinions or interpretations contained in this report are based upon information and material supplied by the client for whose exclusive and confidential use this report has been made. The analytical results, opinions, or interpretations expressed represent the best judgement of Core Laboratories. Core Laboratories, however, makes no warranty or representation, expressed or implied, of any type, and expressly disclaims same as to the productivity, proper operations or profitableness of any oil, gas, coal, or other mineral property, well or sand in connection with such report is used or relied upon for any reason whatsoever. The report shall not be reproduced, in whole or in part, without the written approval of Core Laboratories.

FROM : Falkner/RedRiverLabs FAX NO. : 318-742-1448 Jun. 05 2003 02:31PM P7

8210 Mosley Rd.
Houston, TX 77075
713-943-9776 Telephone
713-943-3846 Facsimile

CORE LABORATORIES

Sample #3 (500-650) **ASTM D-6623** **132072-2**

Component Name	WT %	LV %	Mol %
Propane	0.02	0.03	0.11
Isobutylene	0.03	0.04	0.13
N-Butane	0.04	0.06	0.16
Isopentane	0.02	0.03	0.06
1-Pentene	0.03	0.04	0.10
2-Methyl-1-butene	0.01	0.01	0.03
N-Pentane	0.05	0.07	0.16
2-Methyl-2-butene	0.01	0.01	0.03
4-Methyl-1-pentene	0.01	0.01	0.03
2-Methylpentane	0.02	0.03	0.05
3-Methylpentane	0.01	0.01	0.03
1-Hexene	0.05	0.06	0.14
N-Hexane	0.05	0.06	0.14
Methylcyclopentane	0.01	0.01	0.03
2,4-Dimethyl-1-pentene	0.01	0.01	0.02
1-Methylcyclopentene	0.01	0.01	0.03
Cyclohexane	0.01	0.01	0.03
4-Methyl-trans-2-hexene	0.01	0.01	0.02
2-Methylhexane	0.01	0.01	0.02
2,3-Dimethylpentane	0.01	0.01	0.02
Cyclohexene	0.04	0.04	0.11
3-Methylhexane	0.01	0.01	0.02
3-Ethylpentane	0.01	0.01	0.02
2,2,4-Trimethylpentane	0.04	0.05	0.08
N-Heptane	0.06	0.07	0.14
3-Methyl-trans-3-hexene	0.01	0.01	0.02
3-Ethyl-2-pentene	0.01	0.01	0.02
3-Methyl-trans-2-hexene	0.01	0.01	0.02
Methylcyclohexane	0.02	0.02	0.05
Ethylcyclopentane	0.01	0.01	0.02
2,4-Dimethylhexane	0.01	0.01	0.02
Toluene	0.01	0.01	0.03
2-Methylheptane	0.03	0.04	0.06
4-Methylheptane	0.01	0.01	0.02
3-Methylheptane	0.01	0.01	0.02
2,2,5-Trimethylhexane	0.02	0.02	0.04
1-Octene	0.04	0.05	0.08
Trans-1,2,dimethylcyclohexane	0.01	0.01	0.02
N-Octane	0.06	0.07	0.12
Ethylcyclohexane	0.01	0.01	0.02
Octenes	0.02	0.02	0.04
Ethylbenzene	0.01	0.01	0.02
Trans,trans,1,2,4-trimethylcyclohexane	0.02	0.02	0.04

FROM : Falkner/RedRiverLabs FAX NO. : 318-742-1448 Jun. 05 2003 02:31PM P8

8210 Mosley Rd.
Houston, TX 77075
713-943-9776 Telephone
713-943-3846 Facsimile

CORE LABORATORIES

Sample #3 (500-650) **ASTM D-6623** **132072-2**

Component Name	WT %	LV %	Mol %
47- Meta-Xylene	0.01	0.01	0.02
Para-Xylene	0.01	0.01	0.02
3-Methyloctane	0.02	0.02	0.04
Ortho-Xylene	0.01	0.01	0.02
Cis-1-ethyl-3-methylcyclohexane	0.02	0.02	0.04
1-Nonene	0.04	0.04	0.07
N-Nonane	0.06	0.07	0.11
Trans-1-ethyl-3-methylcyclohexane	0.01	0.01	0.02
Isopropylbenzene	0.01	0.01	0.02
2,6-Dimethyloctane	0.02	0.02	0.03
N-propylcyclohexane	0.01	0.01	0.02
N-butylcyclopentane	0.01	0.01	0.02
1-Methyl-3-ethylbenzene	0.01	0.01	0.02
2,3-Dimethyloctane	0.02	0.02	0.03
1,3,5-Trimethylbenzene	0.01	0.01	0.02
5-Methylnonane	0.01	0.01	0.02
4-Methylnonane	0.01	0.01	0.02
1-Methyl-2-ethylbenzene	0.01	0.01	0.02
3-Methylnonane	0.01	0.01	0.02
C10 Paraffin	0.01	0.01	0.01
1,2,4-Trimethylbenzene	0.02	0.02	0.04
Cis-1-methyl-3-propylcyclohexane	0.01	0.01	0.02
Cis 1,3 diethylcyclohexane	0.01	0.01	0.02
Trans 1,4 diethylcyclohexane	0.01	0.01	0.02
N-Decane	0.09	0.10	0.15
1,2,3-Trimethylbenzene	0.01	0.01	0.02
Indan (2,3-Dihydroindene)	0.01	0.01	0.02
Sec-butylcyclohexane	0.02	0.02	0.03
Butylcyclohexane	0.01	0.01	0.02
C11 Naphthenes	0.02	0.02	0.03
1-Methyl-3-n-propylbenzene	0.01	0.01	0.02
1,4-Diethylbenzene	0.01	0.01	0.02
1-Methyl-2-n-propylbenzene	0.01	0.01	0.02
Cis 1-methyl 4-ter-butylcyclohexane	0.01	0.01	0.02
4-Methyldecane	0.01	0.01	0.01
5-Methyldecane	0.01	0.01	0.01
1,4-Dimethyl-2-ethylbenzene	0.02	0.02	0.03
1,3-Dimethyl-4-ethylbenzene	0.01	0.01	0.02
3-Methyldecane	0.01	0.01	0.01
1,2-Dimethyl-4-ethylbenzene	0.01	0.01	0.02
Tricyclodecane	0.01	0.01	0.02
N-Undecane	0.11	0.12	0.16
1,2,4,5-Tetramethylbenzene	0.01	0.01	0.02

8210 Mosley Rd.
Houston, TX 77075
713-943-9776 Telephone
713-943-3846 Facsimile

CORE LABORATORIES

Sample #3 (500-650) **ASTM D-6623** **132072-2**

Component Name	WT %	LV %	Mol %
1,2,3,5-Tetramethylbenzene	0.01	0.01	0.02
C11 Unidentified	0.07	0.07	0.10
4-Methylindan	0.01	0.01	0.02
5-Methylindan	0.01	0.01	0.02
1,2,3,4-Tetramethylbenzene	0.01	0.01	0.02
6-Methylundecane	0.01	0.01	0.01
4-Methylundecane	0.01	0.01	0.01
Naphthalene	0.01	0.01	0.02
C11 Aromatic	0.33	0.31	0.52
N-Dodecane	0.12	0.13	0.16
Dodecanes	0.10	0.10	0.14
Pentamethylbenzene	0.02	0.02	0.03
2-Methylnaphthalene	0.24	0.21	0.40
1-Methylnaphthalene	0.19	0.15	0.31
Tridecanes	0.51	0.52	0.68
N-Tridecane	0.64	0.69	0.81
Tetradecanes	3.73	3.74	4.60
N-Tetradecane	2.48	2.66	2.93
Pentadecanes	8.96	8.88	10.18
N-Pentadecane	4.32	4.61	4.76
Hexadecanes	10.28	10.10	10.84
N-Hexadecane	4.23	4.51	4.37
Heptadecanes	10.41	10.13	10.28
N-Heptadecane	4.53	4.80	4.41
Pristane	2.98	3.13	2.64
Octadecanes	8.46	8.19	7.71
N-Octadecane	3.72	3.95	3.30
Phytane	1.64	1.67	1.38
Nonadecanes	7.42	7.14	6.61
N-Nonadecane	3.26	3.42	2.84
Eicosanes	6.54	6.26	5.57
N-Eicosane	2.08	2.17	1.74
Heneicosanes	5.64	5.36	4.57
Docosanes	3.15	2.98	2.43
Tricosanes	1.39	1.31	1.03
Tetracosanes	0.31	0.29	0.22
Pentacosanes	0.13	0.12	0.09
Hexacosanes	0.08	0.07	0.05
Heptacosanes	0.04	0.04	0.03
Octacosanes	0.01	0.01	0.01
Unidentified	0.25	0.33	0.43
	100.00	100.00	100.00

FROM : Falkner/Redri/verlabs FAX NO. : 318-742-1448 Jun. 05 2003 02:33PM P10

8210 Mosley Rd.
Houston, TX 77075
713-943-9776 Telephone
713-943-3846 Facsimile

CORE LABORATORIES

Sample #3 (500-650) **ASTM D-5623** **132072-2**

Mol WT of Sample	234.11
Mol WT C6 Plus	235.41
Density of Sample	0.8246
Density C6 Plus	0.8252
RON	0.6
MON	0.6

Summary by Group

Totals	Group	%Wt	% Vol
	Paraffin	0.52	0.62
	Isoparaf.	0.35	0.39
	Olefin	0.34	0.38
	Naphthene	0.24	0.24
	Aromatic	1.04	0.95
	Oxygenates		
	Unidentified	97.51	97.42

Summary by Carbon

Totals	Group	%Wt	% Vol
	C4	0.07	0.10
	C5	0.12	0.16
	C6	0.21	0.24
	C7	0.19	0.20
	C8	0.28	0.32
	C9	0.29	0.30
	C10	0.37	0.38
	C11	0.96	0.88

Composite by Carbon

Group	C#	%Wt	% Vol
Paraffin	C4	0.04	0.06
	C5	0.05	0.07
	C6	0.05	0.06
	C7	0.06	0.07
	C8	0.06	0.07
	C9	0.06	0.07
	C10	0.09	0.10
	C11	0.11	0.12

FROM : Falkner/RedRiverLabs FAX NO. : 318-742-1448 Jun. 05 2003 02:33PM P11

8210 Mosley Rd.
Houston, TX 77075
713-943-9776 Telephone
713-943-3846 Facsimile

CORE LABORATORIES

Sample #3 (500-650) **ASTM D-6623** **132072-2**

Isoparaf.	C4	0.00	0.00
	C5	0.02	0.03
	C6	0.03	0.04
	C7	0.04	0.04
	C8	0.10	0.12
	C9	0.04	0.04
	C10	0.08	0.08
	C11	0.04	0.04
Olefin	C4	0.03	0.04
	C5	0.05	0.06
	C6	0.11	0.12
	C7	0.05	0.05
	C8	0.06	0.07
	C9	0.04	0.04
	C10	0.00	0.00
	C11		
Naphthene	C4		
	C5	0.00	0.00
	C6	0.02	0.02
	C7	0.03	0.03
	C8	0.02	0.02
	C9	0.07	0.07
	C10	0.07	0.07
	C11	0.03	0.03
Aromatic	C4		
	C5		
	C6	0.00	0.00
	C7	0.01	0.01
	C8	0.04	0.04
	C9	0.08	0.08
	C10	0.13	0.13
	C11	0.78	0.69

The analytical results , opinions or interpretations contained in this report are based upon information and material supplied by the client for whose exclusive and confidential use this report has been made. The analytical results, opinions, or interpretations expressed represent the best judgement of Core Laboratories. Core Laboratories, however, makes no warranty or representation, expressed or implied, of any type, and expressly disclaims same as to the productivity, proper operations or profitableness of any oil, gas, coal, or other mineral property, well or sand in connection with such report is used or relied upon for any reason whatsoever. The report shall not be reproduced, in whole or in part, without the written approval of Core Laboratories.

FROM : Falkner/RedRiverLabs FAX NO. : 318-742-1448 Jun. 05 2003 02:34PM P12

8210 Mosley Rd.
Houston, TX 77075
713 943-9776 Telephone
713 943-3846 Facsimile

CORE LABORATORIES

JOHN I FALKNER
FALKNER-RED RIVER LABS

1039 PEARL DRIVE
BOSSIER CITY, LA 71111

Date Reported: 5/30/03
Date Received: 5/19/03

Analytical Report

Test	Result	Units	Method	Date	Analyst
Sample Number: 132072-003		**Sample ID:**	**Sample #14 Crude**		**Sample Rcvd:**
Sample Date:		**Description:**			**5/19/03**
Simulated Distillation-Distillates					
IBP	24	Deg F	ASTM D-2887	5/29/03	DM
5 % off	154	Deg F			
10 % off	209	Deg F			
15 % off	242	Deg F			
20 % off	281	Deg F			
25 % off	319	Deg F			
30 % off	357	Deg F			
35 % off	406	Deg F			
40 % off	449	Deg F			
45 % off	489	Deg F			
50 % off	526	Deg F			
55 % off	572	Deg F			
60 % off	606	Deg F			
65 % off	651	Deg F			
70 % off	697	Deg F			
75 % off	749	Deg F			
80 % off	800	Deg F			
85 % off	855	Deg F			
90 % off	918	Deg F			
95 % off	987	Deg F			
FBP	1077	Deg F			

Approved By: Jean Waits
Supervising Chemist

The analytical results, opinions or interpretations contained in this report are based upon information and material supplied by the client for whose exclusive and confidential use this report has been made. The analytical results, opinions or interpretations expressed represent the best judgment of Core Laboratories. Core Laboratories, however, makes no warranty or representation, express or implied, of any type, and expressly disclaims claims as to the productivity, proper operations or profitableness of any oil, gas, coal, or other mineral, property, well or sand in connection with which such report is used or relied upon for any reason whatsoever. This report shall not be reproduced, in whole or in part, without the written approval of Core Laboratories.

8310 Mosley Rd.
Houston, TX 77075
713 943-9776 Telephone
713 943-3846 Facsimile

CORE LABORATORIES

JOHN I FALKNER
FALKNER-RED RIVER LABS

1039 PEARL DRIVE
BOSSIER CITY, LA 71111

Date Reported: 5/30/03
Date Received: 5/19/03

Analytical Report

Test	Result	Units	Method	Date	Analyst
Sample Number: 132072-001	**Sample ID:**	**Sample #3 (350-500)**			**Sample Rcvd:**
Sample Date:	**Description:**				**5/19/03**
Capillary Gas Chromatography	Attached		ASTM D-5134 Mod	5/22/03	PKT
Sample Number: 132072-002	**Sample ID:**	**Sample #3 (500-650)**			**Sample Rcvd:**
Sample Date:	**Description:**				**5/19/03**
Capillary Gas Chromatography	Attached		ASTM D-5134 Mod	5/22/03	PKT
Sample Number: 132072-003	**Sample ID:**	**Sample #14 Crude**			**Sample Rcvd:**
Sample Date:	**Description:**				**5/19/03**

Cindy - Here this data!

The analytical results, opinions or interpretations contained in this report are based upon information and material supplied by the client for whose exclusive and confidential use this report has been made. The analytical results, opinions or interpretations expressed represent the best judgment of Core Laboratories. Core Laboratories, however, makes no warranty or representation, express or implied, of any type, and expressly disclaims same as to the productivity, proper operations or profitableness of any oil, gas, coal, or other mineral, property, well or sand in connection with which such report is used or relied upon for any reason whatsoever. This report shall not be reproduced, in whole or in part, without the written approval of Core Laboratories.

8210 Mosley Rd.
Houston, TX 77075
713 943-9776 Telephone
713 943-3846 Facsimile

CORE LABORATORIES

JOHN I FALKNER
FALKNER-RED RIVER LABS

1039 PEARL DRIVE
BOSSIER CITY, LA 71111

Date Reported: 5/30/03
Date Received: 5/19/03

Analytical Report

Test	Result	Units	Method	Date	Analyst
Sample Number: 132072-001	**Sample ID: Sample #3 (350-500)**				**Sample Rcvd: 5/19/03**
Sample Date:	**Description:**				
Capillary Gas Chromatography	Attached		ASTM D-5134 Mod	5/22/03	PKT
Sample Number: 132072-002	**Sample ID: Sample #3 (500-650)**				**Sample Rcvd: 5/19/03**
Sample Date:	**Description:**				
Capillary Gas Chromatography	Attached		ASTM D-5134 Mod	5/22/03	PKT
Sample Number: 132072-003	**Sample ID: Sample #14 Crude**				**Sample Rcvd: 5/19/03**
Sample Date:	**Description:**				

The analytical results, opinions or interpretations contained in this report are based upon information and material supplied by the client for whose exclusive and confidential use this report has been made. The analytical results, opinions or interpretations expressed represent the best judgment of Core Laboratories. Core Laboratories, however, makes no warranty or representation, express or implied, of any type, and expressly disclaims same as to the productivity, proper operations or profitableness of any oil, gas, coal, or other mineral, property, well or sand in connection with which such report is used or relied upon for any reason whatsoever. This report shall not be reproduced, in whole or in part, without the written approval of Core Laboratories.

8210 Mosley Rd.
Houston, TX 77075
713-943-9776 Telephone
713-943-3846 Facsimile

CORE LABORATORIES

Sample #3 (350-500) **ASTM D-6623** **132072-1**

Component Name	WT %	LV %	Mol %
Propane	0.04	0.06	0.15
Isobutane	0.01	0.01	0.03
N-Butane	0.02	0.03	0.06
Isopentane	0.01	0.01	0.02
Methylcyclohexane	0.01	0.01	0.02
Toluene	0.01	0.01	0.02
3-Methylheptane	0.02	0.02	0.03
Trans-1,4-dimethylcyclohexane	0.01	0.01	0.01
Trans-1,2,dimethylcyclohexane	0.01	0.01	0.01
N-Octane	0.03	0.03	0.04
Ethylcyclohexane	0.03	0.03	0.04
2,6-Dimethylheptane	0.01	0.01	0.01
1,1,3-Trimethylcyclohexane	0.02	0.02	0.03
C9 Naphthenes	0.04	0.04	0.05
2,5-Dimethylheptane	0.01	0.01	0.01
Ethylbenzene	0.01	0.01	0.02
Trans,trans,1,2,4-trimethylcyclohexane	0.02	0.02	0.03
Meta-Xylene	0.14	0.13	0.21
Para-Xylene	0.04	0.04	0.06
2,3-Dimethylheptane	0.02	0.02	0.03
3,4-Dimethylheptane D/L	0.01	0.01	0.01
4-Methyloctane	0.03	0.03	0.04
2-Methyloctane	0.05	0.06	0.06
3-Ethylheptane	0.02	0.02	0.03
3-Methyloctane	0.06	0.07	0.08
Ortho-Xylene	0.09	0.08	0.14
Cis-1-ethyl-3-methylcyclohexane	0.02	0.02	0.03
Trans-1-ethyl-4-methylcyclohexane	0.11	0.11	0.14
Isobutylcyclopentane	0.08	0.08	0.10
Cis,trans,1,2,3,trimethylcyclohexane	0.02	0.02	0.03
Trans,trans,1,2,3,trimethylcyclohexane	0.01	0.01	0.01
N-Nonane	0.57	0.64	0.71
Trans-1-ethyl-3-methylcyclohexane	0.11	0.11	0.14
Trans-1-ethyl-2-methylcyclohexane	0.04	0.04	0.05
Isopropylbenzene	0.02	0.02	0.03
2,2-Dimethyloctane	0.06	0.07	0.07
Isopropylcyclohexane	0.10	0.10	0.13
Cis-1-ethyl-2-methylcyclohexane	0.02	0.02	0.03
2,4-Dimethyloctane	0.13	0.15	0.15
2,6-Dimethyloctane	0.34	0.38	0.38
2,5-Dimethyloctane	0.06	0.07	0.07
N-propylcyclohexane	0.39	0.40	0.50
N-butylcyclopentane	0.09	0.09	0.11

8210 Mosley Rd.
Houston, TX 77075
713-943-9776 Telephone
713-943-3846 Facsimile

CORE LABORATORIES

Sample #3 (350-500) **ASTM D-6623** **132072-1**

Component Name	WT %	LV %	Mol %
2,7-Dimethyloctane	0.03	0.03	0.03
n-Propylbenzene	0.26	0.24	0.35
3,6-Dimethyloctane	0.07	0.08	0.08
1-Methyl-3-ethylbenzene	0.41	0.38	0.55
1-Methyl-4-ethylbenzene	0.27	0.25	0.36
2,3-Dimethyloctane	0.11	0.12	0.12
1,3,5-Trimethylbenzene	0.73	0.68	0.98
4-Ethyloctane	0.11	0.12	0.12
5-Methylnonane	0.21	0.23	0.24
4-Methylnonane	0.39	0.43	0.44
1-Methyl-2-ethylbenzene	0.26	0.24	0.35
2-Methylnonane	0.39	0.43	0.44
3-Ethyloctane	0.12	0.13	0.14
1,2,3,5 Tet-methylcyclohexane	0.06	0.06	0.07
3-Methylnonane	0.64	0.70	0.72
1,2,3,4 Tet-methylcyclohexane	0.14	0.14	0.16
C10 Naphthenes	0.24	0.25	0.28
C10 Paraffin	0.12	0.13	0.12
1,2,4-Trimethylbenzene	1.53	1.41	2.05
Cis-1-methyl-3-propylcyclohexane	0.45	0.46	0.52
Trans 1,4 diethylcyclohexane	0.43	0.44	0.49
Trans-1-methyl-3-propylcyclohexane	0.06	0.06	0.07
1-Ethyl-2,3-dimethylcyclohexane	0.06	0.06	0.07
Isobutylbenzene	0.24	0.23	0.29
Cis-1-methyl-4-propylcyclohexane	0.12	0.12	0.14
sec-Butylbenzene	0.15	0.14	0.18
N-Decane	4.14	4.57	4.68
1,2,3,4 Tet-methylcyclohexane	0.12	0.12	0.14
Trans 1,3 diethylcyclohexane	0.06	0.06	0.07
1,2,3-Trimethylbenzene	0.50	0.45	0.67
Trans 1,2 diethylcyclohexane	0.07	0.07	0.08
1-Methyl-3-isopropylbenzene	0.20	0.19	0.24
Cis 1,4 diethylcyclohexane	0.12	0.12	0.14
1-Methyl-4-isopropylbenzene	0.17	0.16	0.20
Indan (2,3-Dihydroindene)	0.25	0.21	0.34
Sec-butylcyclohexane	1.05	1.08	1.20
Butylcyclohexane	1.08	1.09	1.24
1,3-Diethylbenzene	0.42	0.39	0.50
C11 Naphthenes	0.71	0.72	0.74
1-Methyl-3-n-propylbenzene	0.63	0.59	0.75
1,4-Diethylbenzene	0.43	0.40	0.51
1,3-Dimethyl-5-ethylbenzene	0.47	0.44	0.56
1,2-Diethylbenzene	0.13	0.12	0.16

8210 Mosley Rd.
Houston, TX 77075
713-943-9776 Telephone
713-943-3846 Facsimile

CORE LABORATORIES

Sample #3 (350-500) **ASTM D-6623** **132072-1**

Component Name	WT %	LV %	Mol %
1-Methyl-2-n-propylbenzene	0.24	0.22	0.29
Cis 1-methyl 4-ter-butylcyclohexane	0.58	0.58	0.60
C11 Paraffins	0.30	0.32	0.31
4-Methyldecane	0.69	0.75	0.71
5-Methyldecane	0.51	0.55	0.52
1,4-Dimethyl-2-ethylbenzene	0.99	0.91	1.19
1,3-Dimethyl-4-ethylbenzene	0.46	0.42	0.55
3-Methyldecane	0.65	0.71	0.67
1,2-Dimethyl-4-ethylbenzene	0.50	0.46	0.60
1,3-Dimethyl-2-ethylbenzene	0.16	0.14	0.19
Tricyclodecane	0.51	0.51	0.60
1,2-Dimethyl-3-Ethylbenzene	0.34	0.31	0.41
N-Undecane	6.20	6.75	6.38
1,2,4,5-Tetramethylbenzene	0.34	0.31	0.41
1,2,3,5-Tetramethylbenzene	0.53	0.48	0.63
C11 Unidentified	1.72	1.74	1.72
4-Methylindan	0.38	0.32	0.46
5-Methylindan	0.33	0.28	0.40
1,2,3,4-Tetramethylbenzene	0.50	0.45	0.60
Tetralin	0.02	0.02	0.02
6-Methylundecane	1.16	1.25	1.09
4-Methylundecane	0.51	0.55	0.48
Pentylbenzene	0.11	0.10	0.12
Naphthalene	0.62	0.50	0.78
3-Methylundecane	0.18	0.19	0.17
C11 Aromatic	8.94	8.33	9.69
N-Dodecane	5.91	6.35	5.58
Dodecanes	5.86	5.48	5.80
Pentamethylbenzene	0.24	0.21	0.26
2-Methylnaphthalene	1.55	1.31	1.75
1-Methylnaphthalene	0.97	0.77	1.10
Tridecanes	6.77	6.76	6.22
N-Tridecane	5.43	5.78	4.73
Tetradecanes	8.47	8.35	7.17
N-Tetradecane	3.47	3.66	2.81
Pentadecanes	5.75	5.60	4.49
N-Pentadecane	1.82	1.91	1.38
Hexadecanes	2.11	2.04	1.53
N-Hexadecane	0.67	0.70	0.48
Heptadecanes	0.90	0.86	0.61
N-Heptadecane	0.32	0.33	0.21
Pristane	0.05	0.05	0.03
Octadecanes	0.42	0.40	0.26

8210 Mosley Rd.
Houston, TX 77075
713-943-9776 Telephone
713-943-3846 Facsimile

CORE LABORATORIES

Sample #3 (350-500) **ASTM D-6623** **132072-1**

Component Name	WT %	LV %	Mol %
N-Octadecane	0.16	0.17	0.10
Nonadecanes	0.18	0.17	0.11
N-Nonadecane	0.07	0.07	0.04
Eicosanes	0.02	0.02	0.01
N-Eicosane	0.04	0.04	0.02
Heneicosanes	0.02	0.02	0.01
Docosanes	0.02	0.02	0.01
Tricosanes	0.01	0.01	0.01
Tetracosanes	0.01	0.01	0.00
Unidentified	0.20	0.29	0.19
	100.00	100.00	100.00

Mol WT of Sample	160.74
Mol WT C6 Plus	161.02
Density of Sample	0.8102
Density C6 Plus	0.8106
RON	4.2
MON	3.7

Summary by Group

Totals

Group	%Wt	% Vol
Paraffin	10.96	12.02
Isoparaf.	6.34	6.92
Olefin	0.00	0.00
Naphthene	6.99	7.08
Aromatic	24.58	22.35
Oxygenates		
* Unidentified	51.13	51.63

Summary by Carbon

Totals

Group	%Wt	% Vol
C4	0.03	0.04
C5	0.01	0.01
C6	0.00	0.00
C7	0.02	0.02
C8	0.38	0.36
C9	6.08	5.83
C10	19.74	19.76
C11	22.61	22.35

8210 Mosley Rd.
Houston, TX 77075
713-943-9776 Telephone
713-943-3846 Facsimile

CORE LABORATORIES

Sample #3 (350-500) **ASTM D-6623** **132072-1**

Composite by Carbon

Group	C#	%Wt	% Vol
Paraffin	C4	0.02	0.03
	C5	0.00	0.00
	C6	0.00	0.00
	C7	0.00	0.00
	C8	0.03	0.03
	C9	0.57	0.64
	C10	4.14	4.57
	C11	6.20	6.75
Isoparaf.	C4	0.01	0.01
	C5	0.01	0.01
	C6	0.00	0.00
	C7	0.00	0.00
	C8	0.02	0.02
	C9	0.21	0.23
	C10	2.78	3.07
	C11	3.31	3.58
Olefin	C4	0.00	0.00
	C5	0.00	0.00
	C6	0.00	0.00
	C7	0.00	0.00
	C8	0.00	0.00
	C9	0.00	0.00
	C10	0.00	0.00
	C11		
Naphthene	C4		
	C5	0.00	0.00
	C6	0.00	0.00
	C7	0.01	0.01
	C8	0.05	0.05
	C9	1.07	1.08
	C10	4.57	4.64
	C11	1.29	1.30

8210 Mosley Rd.
Houston, TX 77075
713-943-9776 Telephone
713-943-3846 Facsimile

CORE LABORATORIES

Sample #3 (350-500) **ASTM D-6623** **132072-1**

Aromatic	C4		
	C5		
	C6	0.00	0.00
	C7	0.01	0.01
	C8	0.28	0.26
	C9	4.23	3.88
	C10	8.25	7.48
	C11	11.81	10.72

The analytical results , opinions or interpretations contained in this report are based upon information and material supplied by the client for whose exclusive and confidential use this report has been made. The analytical results, opinions, or interpretations expressed represent the best judgement of Core Laboratories. Core Laboratories, however, makes no warranty or representation, expressed or implied, of any type, and expressly disclaims same as to the productivity, proper operations or profitableness of any oil, gas, coal, or other mineral property, ll or sand in connection with such report is used or relied upon for any reason whatsoever. The report shall not be reproduced, in whole in part, without the written approval of Core Laboratories.

8210 Mosley Rd.
Houston, TX 77075
713-943-9776 Telephone
713-943-3846 Facsimile

CORE LABORATORIES

Sample #3 (500-650) **ASTM D-6623** **132072-2**

Component Name	WT %	LV %	Mol %
Propane	0.02	0.03	0.11
Isobutylene	0.03	0.04	0.13
N-Butane	0.04	0.06	0.16
Isopentane	0.02	0.03	0.06
1-Pentene	0.03	0.04	0.10
2-Methyl-1-butene	0.01	0.01	0.03
N-Pentane	0.05	0.07	0.16
2-Methyl-2-butene	0.01	0.01	0.03
4-Methyl-1-pentene	0.01	0.01	0.03
2-Methylpentane	0.02	0.03	0.05
3-Methylpentane	0.01	0.01	0.03
1-Hexene	0.05	0.06	0.14
N-Hexane	0.05	0.06	0.14
Methylcyclopentane	0.01	0.01	0.03
2,4-Dimethyl-1-pentene	0.01	0.01	0.02
1-Methylcyclopentene	0.01	0.01	0.03
Cyclohexane	0.01	0.01	0.03
4-Methyl-trans-2-hexene	0.01	0.01	0.02
2-Methylhexane	0.01	0.01	0.02
2,3-Dimethylpentane	0.01	0.01	0.02
Cyclohexene	0.04	0.04	0.11
3-Methylhexane	0.01	0.01	0.02
3-Ethylpentane	0.01	0.01	0.02
2,2,4-Trimethylpentane	0.04	0.05	0.08
N-Heptane	0.06	0.07	0.14
3-Methyl-trans-3-hexene	0.01	0.01	0.02
3-Ethyl-2-pentene	0.01	0.01	0.02
3-Methyl-trans-2-hexene	0.01	0.01	0.02
Methylcyclohexane	0.02	0.02	0.05
Ethylcyclopentane	0.01	0.01	0.02
2,4-Dimethylhexane	0.01	0.01	0.02
Toluene	0.01	0.01	0.03
2-Methylheptane	0.03	0.04	0.06
4-Methylheptane	0.01	0.01	0.02
3-Methylheptane	0.01	0.01	0.02
2,2,5-Trimethylhexane	0.02	0.02	0.04
1-Octene	0.04	0.05	0.08
Trans-1,2,dimethylcyclohexane	0.01	0.01	0.02
N-Octane	0.06	0.07	0.12
Ethylcyclohexane	0.01	0.01	0.02
Octenes	0.02	0.02	0.04
Ethylbenzene	0.01	0.01	0.02
Trans,trans,1,2,4-trimethylcyclohexane	0.02	0.02	0.04

8210 Mosley Rd.
Houston, TX 77075
713-943-9776 Telephone
713-943-3846 Facsimile

CORE LABORATORIES

Sample #3 (500-650) **ASTM D-6623** **132072-2**

Component Name	WT %	LV %	Mol %
Meta-Xylene	0.01	0.01	0.02
Para-Xylene	0.01	0.01	0.02
3-Methyloctane	0.02	0.02	0.04
Ortho-Xylene	0.01	0.01	0.02
Cis-1-ethyl-3-methylcyclohexane	0.02	0.02	0.04
1-Nonene	0.04	0.04	0.07
N-Nonane	0.06	0.07	0.11
Trans-1-ethyl-3-methylcyclohexane	0.01	0.01	0.02
Isopropylbenzene	0.01	0.01	0.02
2,6-Dimethyloctane	0.02	0.02	0.03
N-propylcyclohexane	0.01	0.01	0.02
N-butylcyclopentane	0.01	0.01	0.02
1-Methyl-3-ethylbenzene	0.01	0.01	0.02
2,3-Dimethyloctane	0.02	0.02	0.03
1,3,5-Trimethylbenzene	0.01	0.01	0.02
5-Methylnonane	0.01	0.01	0.02
4-Methylnonane	0.01	0.01	0.02
1-Methyl-2-ethylbenzene	0.01	0.01	0.02
3-Methylnonane	0.01	0.01	0.02
C10 Paraffin	0.01	0.01	0.01
1,2,4-Trimethylbenzene	0.02	0.02	0.04
Cis-1-methyl-3-propylcyclohexane	0.01	0.01	0.02
Cis 1,3 diethylcyclohexane	0.01	0.01	0.02
Trans 1,4 diethylcyclohexane	0.01	0.01	0.02
N-Decane	0.09	0.10	0.15
1,2,3-Trimethylbenzene	0.01	0.01	0.02
Indan (2,3-Dihydroindene)	0.01	0.01	0.02
Sec-butylcyclohexane	0.02	0.02	0.03
Butylcyclohexane	0.01	0.01	0.02
C11 Naphthenes	0.02	0.02	0.03
1-Methyl-3-n-propylbenzene	0.01	0.01	0.02
1,4-Diethylbenzene	0.01	0.01	0.02
1-Methyl-2-n-propylbenzene	0.01	0.01	0.02
Cis 1-methyl 4-ter-butylcyclohexane	0.01	0.01	0.02
4-Methyldecane	0.01	0.01	0.01
5-Methyldecane	0.01	0.01	0.01
1,4-Dimethyl-2-ethylbenzene	0.02	0.02	0.03
1,3-Dimethyl-4-ethylbenzene	0.01	0.01	0.02
3-Methyldecane	0.01	0.01	0.01
1,2-Dimethyl-4-ethylbenzene	0.01	0.01	0.02
Tricyclodecane	0.01	0.01	0.02
N-Undecane	0.11	0.12	0.16
1,2,4,5-Tetramethylbenzene	0.01	0.01	0.02

8210 Mosley Rd.
Houston, TX 77075
713-943-9776 Telephone
713-943-3846 Facsimile

CORE LABORATORIES

Sample #3 (500-650) **ASTM D-6623** **132072-2**

Component Name	WT %	LV %	Mol %
1,2,3,5-Tetramethylbenzene	0.01	0.01	0.02
C11 Unidentified	0.07	0.07	0.10
4-Methylindan	0.01	0.01	0.02
5-Methylindan	0.01	0.01	0.02
1,2,3,4-Tetramethylbenzene	0.01	0.01	0.02
6-Methylundecane	0.01	0.01	0.01
4-Methylundecane	0.01	0.01	0.01
Naphthalene	0.01	0.01	0.02
C11 Aromatic	0.33	0.31	0.52
N-Dodecane	0.12	0.13	0.16
Dodecanes	0.10	0.10	0.14
Pentamethylbenzene	0.02	0.02	0.03
2-Methylnaphthalene	0.24	0.21	0.40
1-Methylnaphthalene	0.19	0.15	0.31
Tridecanes	0.51	0.52	0.68
N-Tridecane	0.64	0.69	0.81
Tetradecanes	3.73	3.74	4.60
N-Tetradecane	2.48	2.66	2.93
Pentadecanes	8.96	8.88	10.18
N-Pentadecane	4.32	4.61	4.76
Hexadecanes	10.28	10.10	10.84
N-Hexadecane	4.23	4.51	4.37
Heptadecanes	10.41	10.13	10.28
N-Heptadecane	4.53	4.80	4.41
Pristane	2.98	3.13	2.64
Octadecanes	8.46	8.19	7.71
N-Octadecane	3.72	3.95	3.30
Phytane	1.64	1.67	1.38
Nonadecanes	7.42	7.14	6.61
N-Nonadecane	3.26	3.42	2.84
Eicosanes	6.54	6.26	5.57
N-Eicosane	2.08	2.17	1.74
Heneicosanes	5.64	5.36	4.57
Docosanes	3.15	2.98	2.43
Tricosanes	1.39	1.31	1.03
Tetracosanes	0.31	0.29	0.22
Pentacosanes	0.13	0.12	0.09
Hexacosanes	0.08	0.07	0.05
Heptacosanes	0.04	0.04	0.03
Octacosanes	0.01	0.01	0.01
Unidentified	0.25	0.33	0.43
	100.00	100.00	100.00

8210 Mosley Rd.
Houston, TX 77075
713-943-9776 Telephone
713-943-3846 Facsimile

CORE LABORATORIES

Sample #3 (500-650) **ASTM D-6623** **132072-2**

Mol WT of Sample	234.11
Mol WT C6 Plus	235.41
Density of Sample	0.8246
Density C6 Plus	0.8252
RON	0.6
MON	0.6

Summary by Group

Totals	**Group**	**%Wt**	**% Vol**
	Paraffin	0.52	0.62
	Isoparaf.	0.35	0.39
	Olefin	0.34	0.38
	Naphthene	0.24	0.24
	Aromatic	1.04	0.95
	Oxygenates		
*	Unidentified	97.51	97.42

Summary by Carbon

Totals	**Group**	**%Wt**	**% Vol**
	C4	0.07	0.10
	C5	0.12	0.16
	C6	0.21	0.24
	C7	0.19	0.20
	C8	0.28	0.32
	C9	0.29	0.30
	C10	0.37	0.38
	C11	0.96	0.88

Composite by Carbon

Group	**C#**	**%Wt**	**% Vol**
Paraffin	C4	0.04	0.06
	C5	0.05	0.07
	C6	0.05	0.06
	C7	0.06	0.07
	C8	0.06	0.07
	C9	0.06	0.07
	C10	0.09	0.10
	C11	0.11	0.12

8210 Mosley Rd.
Houston, TX 77075
713-943-9776 Telephone
713-943-3846 Facsimile

CORE LABORATORIES

Sample #3 (500-650) **ASTM D-6623** **132072-2**

Isoparaf.	C4	0.00	0.00
	C5	0.02	0.03
	C6	0.03	0.04
	C7	0.04	0.04
	C8	0.10	0.12
	C9	0.04	0.04
	C10	0.08	0.08
	C11	0.04	0.04
Olefin	C4	0.03	0.04
	C5	0.05	0.06
	C6	0.11	0.12
	C7	0.05	0.05
	C8	0.06	0.07
	C9	0.04	0.04
	C10	0.00	0.00
	C11		
Naphthene	C4		
	C5	0.00	0.00
	C6	0.02	0.02
	C7	0.03	0.03
	C8	0.02	0.02
	C9	0.07	0.07
	C10	0.07	0.07
	C11	0.03	0.03
Aromatic	C4		
	C5		
	C6	0.00	0.00
	C7	0.01	0.01
	C8	0.04	0.04
	C9	0.08	0.08
	C10	0.13	0.13
	C11	0.78	0.69

The analytical results , opinions or interpretations contained in this report are based upon information and material supplied by the client for whose exclusive and confidential use this report has been made. The analytical results, opinions, or interpretations expressed represent the best judgement of Core Laboratories. Core Laboratories, however, makes no warranty or representation, expressed or implied, of any type, and expressly disclaims same as to the productivity, proper operations or profitableness of any oil, gas, coal, or other mineral property, well or sand in connection with such report is used or relied upon for any reason whatsoever. The report shall not be reproduced, in whole or in part, without the written approval of Core Laboratories.

FALKNER RED-RIVER LABORATORIES, INC.

1039 PEARL DRIVE·P.O. BOX 5438
BOSSIER CITY, LA 71111
PHONE: 318-746-2404·FAX: 318-742-1448

LAB REPORT #: 4-142681

REPORT DATE: February 28, 2003

SUPPLIER: John D. Jones Engineering

REQUESTED BY: John D. Jones Gallup - 50%

DATE RECEIVED: January 6, 2003

SAMPLE #5

Sample #	Crude #5	Crude #5	Crude #5	Crude #5	Crude #5	Crude #5
Grade	IBP-200	200-300	300-350	350-500	500-650	650-1025
Gravity	76.0	57.9	49.5	42.9	36.0	24.1
I.B.P.	76	186	296	366	322	--
5% Recovered At	97	209	304	376	465	--
10% "	110	216	307	386	508	--
20%	123	225	309	395	536	--
30%	132	228	310	401	546	--
40%	140	233	311	408	557	--
50%	148	237	315	415	566	--
60%	154	241	316	426	578	--
70%	163	248	320	438	592	--
80%	174	256	324	450	607	--
90%	192	267	330	468	631	--
95%	220	277	336	482	654	--
End Point	240	334	368	530	680	--
Recovery	97.0	98.0	99.0	99.0	98.0	--
Residue	1.0	1.0	.5	1.0	2.0	--
Loss	2.0	1.0	.5	0.0	0.0	--
Specific Gravity	.6819	.7471	.7818	.8114	.8403	.9094
Sulfur, wt%	.007	<.005	<.005	<.005	.059	.269
Freeze Point	--	--	Below -62°F	--	--	--
Flash Point	--	--	72°F	--	--	--
Aromatics	--	--	17.66	17.80	--	--
Olefins	--	--	.93	.76	--	--
Saturate	--	--	81.41	81.44	--	--
Nitrogen	--		--	--	--	--
Gross Heat of Combustion	--	--	19866.76	--	--	--
US Cetane Index	--	--	--	44.8	--	--
Yield L.V. %	10.2	25.3	9.5	15.1	17.9	22.0
Yield wt %	8.62	23.43	9.21	15.19	18.65	24.80
Smoke point	--	--	--	27	--	--
Cloud Point	--	--	--	-58°F	--	--
H2S	--	--	--	--	Positive	--
RSH	--	--	--	--	.003	--
Viscosity @100°	--	--	?	--	39.56 SUS	1427.5SUS
Viscosity @210°	--	--		--	--	58.16SUS

REMARKS:

- **The results of this test relate only to the items tested.**
- **This report will not be reproduced except in full, without the written approval of the laboratory.**

Richard L. Moshe

FOR FALKNER RED RIVER LABORATORIES, INC

8210 Mosley Rd.
Houston, TX 77075
713 943-9776 Telephone
713 943-3846 Facsimile

CORE LABORATORIES

RICHARD MOSHER
FALKNER-RED RIVER LABS

1039 PEARL DRIVE
BOSSIER CITY, LA 71111

Date Reported: 4/22/03
Date Received: 4/10/03

Analytical Report

Test	Result	Units	Method	Date	Analyst
Sample Number: 131514-001	**Sample ID:**	**Sample # 5 Crude**			**Sample Rcvd:**
Sample Date:	**Description:**				**4/10/03**
Simulated Distillation-Crude					
IBP	9	Deg F	ASTM D-5307	4/21/03	DM
5 % off	134	Deg F			
10 % off	176	Deg F			
15 % off	207	Deg F			
20 % off	225	Deg F			
5 % off	246	Deg F			
30 % off	273	Deg F			
35 % off	300	Deg F			
40 % off	323	Deg F			
45 % off	354	Deg F			
50 % off	403	Deg F			
55 % off	450	Deg F			
60 % off	500	Deg F			
65 % off	551	Deg F			
70 % off	600	Deg F			
75 % off	661	Deg F			
80 % off	724	Deg F			
85 % off	790	Deg F			
90 % off	867	Deg F			
95 % off	972	Deg F			
% Recovered	96.1	@ 1000 Deg.			
% Residue	3.9	@ 1000 Deg.			
Sample Number: 131514-002	**Sample ID:**	**Sample # 5 (350-500)**			**Sample Rcvd:**
Sample Date:	**Description:**				**4/10/03**
Capillary Gas Chromatography	Attached		ASTM D-5134 Mod	4/11/03	PKT

Analytical results, opinions or interpretations contained in this report are based upon information and material supplied by the client for whose exclusive and confidential use this report has been made. The analytical results, opinions or interpretations expressed represent the best judgment of Core Laboratories. Core Laboratories, however, makes no warranty or representation, express or implied, of any type, and expressly disclaims same as to the productivity, proper operations or profitableness of any oil, gas, coal, or other mineral, property, well or sand in connection with which such report is used or relied upon for any reason whatsoever. This report shall not be reproduced, in whole or in part, without the written approval of Core Laboratories.

8210 Mosley Rd.
Houston, TX 77075
713 943-9776 Telephone
713 943-3846 Facsimile

CORE LABORATORIES

JOHN I FALKNER
FALKNER-RED RIVER LABS

1039 PEARL DRIVE
BOSSIER CITY, LA 71111

Date Reported: 6/10/03
Date Received: 6/9/03

Analytical Report

Test	Result	Units	Method	Date	Analyst
Sample Number: 132369-001 **Sample Date:**	**Sample ID:** **Description:**	**Sample 5 Bottoms**			**Sample Rcvd:** 6/9/03
Bromine Number	2.2	g/100g	ASTM D-1159	6/10/03	CB
Sample Number: 132369-002 **Sample Date:**	**Sample ID:** **Description:**	**Sample 12 Bottoms**			**Sample Rcvd:** 6/9/03
Bromine Number	8.7	g/100g	ASTM D-1159	6/10/03	CB
Sample Number: 132369-003 **Sample Date:**	**Sample ID:** **Description:**	**Sample 14 Bottoms**			**Sample Rcvd:** 6/9/03
Bromine Number	7.7	g/100g	ASTM D-1159	6/10/03	CB

Approved By: Pat Gideons
Laboratory Supervisor

The analytical results, opinions or interpretations contained in this report are based upon information and material supplied by the client for whose exclusive and confidential use this report has been made. The analytical results, opinions or interpretations expressed represent the best judgment of Core Laboratories. Core Laboratories, however, makes no warranty or representation, express or implied, of any type, and expressly disclaims same as to the productivity, proper operations or profitableness of any oil, gas, coal, or other mineral, property, well or sand in connection with which such report is used or relied upon for any reason whatsoever. This report shall not be reproduced, in whole or in part, without the written approval of Core Laboratories.

8210 Mosley Rd.
Houston, TX 77075
713 943-9776 Telephone
713 943-3846 Facsimile

CORE LABORATORIES

JOHN I FALKNER
FALKNER-RED RIVER LABS

1039 PEARL DRIVE
BOSSIER CITY, LA 71111

Sample Number: 130818-014
Sample Date:
Date Reported: 3/6/03
Date Received: 2/25/03
Sample ID: #3(Crude)
Description:

Analytical Report

Test	Result	Units	Method	Date	Analyst
Nitrogen Total by Chemilum.	276	ppm wt	ASTM D-4629	2/28/03	JT

Approved By: Jean Waits
Supervising Chemist

The analytical results, opinions or interpretations contained in this report are based upon information and material supplied by the client for whose exclusive and confidential use this report has been made. The analytical results, opinions or interpretations expressed represent the best judgment of Core Laboratories. Core Laboratories, however, makes no warranty or representation, express or implied, of any type, and expressly disclaims same as to the productivity, proper operations or profitableness of any oil, gas, coal, or other mineral, property, well or sand in connection with which such report is used or relied upon for any reason whatsoever. This report shall not be reproduced, in whole or in part, without the written approval of Core Laboratories.

8210 Mosley Rd.
Houston, TX 77075
713 943-9776 Telephone
713 943-3846 Facsimile

CORE LABORATORIES

JOHN I FALKNER
FALKNER-RED RIVER LABS

1039 PEARL DRIVE
BOSSIER CITY, LA 71111

Sample Number: 130818-001
Sample Date:
Date Reported: 3/6/03
Date Received: 2/25/03
Sample ID: #5 (IBP-200)
Description:

Analytical Report

Test	Result	Units	Method	Date	Analyst
Capillary Gas Chromatography	Attached		ASTM D-5134 Mod	2/27/03	PKT

Approved By: Jean Waits
Supervising Chemist

The analytical results, opinions or interpretations contained in this report are based upon information and material supplied by the client for whose exclusive and confidential use this report has been made. The analytical results, opinions or interpretations expressed represent the best judgment of Core Laboratories. Core Laboratories, however, makes no warranty or representation, express or implied, of any type and expressly disclaims same as to the productivity, proper operations or profitableness of any oil, gas, coal, or other mineral, property, well or sand in connection with which such report is used or relied upon for any reason whatsoever. This report shall not be reproduced, in whole or in part, without the written approval of Core Laboratories.

Core Lab
PETROLEUM SERVICES

8210 Mosley Rd.
Houston, TX 77075
713-943-9776 Telephone
713-943-3846 Facsimile

CORE LABORATORIES

#5 (IBP-200) **ASTM D-6623** **130818-1**

Component Name	WT %	LV %	Mol %
Ethane	0.02	0.04	0.06
Propane	0.85	1.15	1.60
Isobutane	1.05	1.28	1.50
N-Butane	5.44	6.37	7.76
2,2-Dimethylpropane	0.02	0.02	0.02
Isopentane	7.79	8.53	8.96
N-Pentane	11.43	12.36	13.13
2,2-Dimethylbutane	0.27	0.28	0.26
Cyclopentane	1.92	1.75	2.27
2,3-Dimethylbutane	1.03	1.06	0.99
2-Methylpentane	7.67	7.96	7.38
3-Methylpentane	4.84	4.94	4.66
N-Hexane	11.87	12.20	11.42
2,2-Dimethylpentane	0.28	0.28	0.23
Methylcyclopentane	7.72	7.00	7.61
2,4-Dimethylpentane	0.66	0.67	0.55
2,2,3-Trimethylbutane	0.05	0.05	0.04
Benzene	1.52	1.17	1.61
3,3-Dimethylpentane	0.11	0.11	0.09
Cyclohexane	5.42	4.73	5.34
2-Methylhexane	2.97	2.97	2.46
2,3-Dimethylpentane	0.88	0.86	0.73
1,1-Dimethylcyclopentane	0.84	0.76	0.71
3-Methylhexane	3.03	2.99	2.51
Cis-1,3-dimethylcyclopentane	1.44	1.31	1.22
Trans-1,3-dimethylcyclopentane	1.30	1.18	1.10
3-Ethylpentane	0.22	0.21	0.18
Trans-1,2-dimethylcyclopentane	2.00	1.81	1.69
2,2,4-Trimethylpentane	0.02	0.02	0.01
N-Heptane	4.19	4.16	3.47
Methylcyclohexane	5.21	4.60	4.40
1,1,3-Trimethylcyclopentane	0.50	0.45	0.37
Ethylcyclopentane	0.19	0.17	0.16
2,5-Dimethylhexane	0.18	0.18	0.13
2,4-Dimethylhexane	0.22	0.21	0.16
Trans,cis-1,2,4-trimethylcyclopentane	0.35	0.32	0.26
3,3-Dimethylhexane	0.04	0.04	0.03
Trans,cis-1,2,3-trimethylcyclopentane	0.32	0.29	0.24
2,3,4-Trimethylpentane	0.03	0.03	0.02
Toluene	1.52	1.19	1.37
2,3-Dimethylhexane	0.18	0.17	0.13
2-Methyl-3-Ethylpentane	0.02	0.02	0.01
2-Methylheptane	0.59	0.57	0.43

8210 Mosley Rd.
Houston, TX 77075
713-943-9776 Telephone
713-943-3846 Facsimile

CORE LABORATORIES

#5 (IBP-200) **ASTM D-6623** **130818-1**

Component Name	WT %	LV %	Mol %
4-Methylheptane	0.15	0.14	0.11
Cis,trans,1,2,4-trimethylcyclopentane	0.03	0.03	0.02
3-Methylheptane	0.98	0.94	0.71
Trans-1,4-dimethylcyclohexane	0.23	0.20	0.17
1,1-Dimethylcyclohexane	0.08	0.07	0.06
Trans-1-ethyl-3-methylcyclopentane	0.03	0.03	0.02
Cis-1-ethyl-3-methylcyclopentane	0.03	0.03	0.02
Trans-1-ethyl-2-methylcyclopentane	0.06	0.05	0.04
1-Ethyl-1-methylcyclopentane	0.02	0.02	0.01
Trans-1,2,dimethylcyclohexane	0.20	0.18	0.15
N-Octane	0.64	0.62	0.46
2,2-Dimethylheptane	0.01	0.01	0.01
Cis-1,2-dimethylcyclohexane	0.02	0.02	0.01
2,4-Dimethylheptane	0.03	0.03	0.02
Ethylcyclohexane	0.15	0.13	0.11
2,6-Dimethylheptane	0.04	0.04	0.03
2,5-Dimethylheptane	0.14	0.13	0.09
3,5-Dimethylheptane	0.12	0.11	0.08
Ethylbenzene	0.04	0.03	0.03
Trans,trans,1,2,4-trimethylcyclohexane	0.02	0.02	0.01
Meta-Xylene	0.17	0.13	0.13
Para-Xylene	0.05	0.04	0.04
2,3-Dimethylheptane	0.03	0.03	0.02
3,4-Dimethylheptane D/L	0.01	0.01	0.01
4-Methyloctane	0.03	0.03	0.02
2-Methyloctane	0.04	0.04	0.03
3-Ethylheptane	0.01	0.01	0.01
3-Methyloctane	0.04	0.04	0.03
Ortho-Xylene	0.05	0.04	0.04
Trans-1-ethyl-4-methylcyclohexane	0.03	0.03	0.02
Isobutylcyclopentane	0.02	0.02	0.01
N-Nonane	0.13	0.12	0.08
Trans-1-ethyl-3-methylcyclohexane	0.01	0.01	0.01
2,2-Dimethyloctane	0.01	0.01	0.01
2,6-Dimethyloctane	0.01	0.01	0.01
N-propylcyclohexane	0.02	0.02	0.01
1-Methyl-3-ethylbenzene	0.02	0.02	0.01
1-Methyl-4-ethylbenzene	0.01	0.01	0.01
1,3,5-Trimethylbenzene	0.01	0.01	0.01
4-Methylnonane	0.01	0.01	0.01
1-Methyl-2-ethylbenzene	0.01	0.01	0.01
3-Methylnonane	0.01	0.01	0.01
1,2,4-Trimethylbenzene	0.02	0.02	0.01

8210 Mosley Rd.
Houston, TX 77075
713-943-9776 Telephone
713-943-3848 Facsimile

CORE LABORATORIES

#5 (IBP-200) **ASTM D-6623** **130818-1**

Component Name	WT %	LV %	Mol %
N-Decane	0.02	0.02	0.01
N-Undecane	0.01	0.01	0.01
	100.00	100.00	100.00

Mol WT of Sample	82.95
Mol WT C6 Plus	90.92
Density of Sample	0.6838
Density C6 Plus	0.7145

Summary by Group

Totals

Group	%Wt	% Vol
Paraffin	33.73	35.86
Isoparaf.	33.82	35.05
Olefin	0.00	0.00
Naphthene	28.16	25.23
Aromatic	3.42	2.67
Oxygenates		
Unidentified	0.87	1.19

Summary by Carbon

Totals

Group	%Wt	% Vol
C4	6.49	7.65
C5	21.16	22.66
C6	40.34	39.34
C7	24.89	23.32
C8	5.38	5.00
C9	0.80	0.77
C10	0.06	0.06
C11	0.01	0.01

Core Lab
PETROLEUM SERVICES

8210 Mosley Rd.
Houston, TX 77075
713-943-9776 Telephone
713-943-3846 Facsimile

CORE LABORATORIES

#5 (IBP-200) **ASTM D-6623** **130818-1**

Composite by Carbon

Group	C#	%Wt	% Vol
Paraffin	C4	5.44	6.37
	C5	11.43	12.36
	C6	11.87	12.20
	C7	4.19	4.16
	C8	0.64	0.62
	C9	0.13	0.12
	C10	0.02	0.02
	C11	0.01	0.01
Isoparaf.	C4	1.05	1.28
	C5	7.81	8.55
	C6	13.81	14.24
	C7	8.20	8.14
	C8	2.41	2.32
	C9	0.50	0.48
	C10	0.04	0.04
	C11	0.00	0.00
Olefin	C4	0.00	0.00
	C5	0.00	0.00
	C6	0.00	0.00
	C7	0.00	0.00
	C8	0.00	0.00
	C9	0.00	0.00
	C10	0.00	0.00
	C11		
Naphthene	C4		
	C5	1.92	1.75
	C6	13.14	11.73
	C7	10.98	9.83
	C8	2.02	1.82
	C9	0.10	0.10
	C10	0.00	0.00
	C11	0.00	0.00

Core Lab
PETROLEUM SERVICES

8210 Mosley Rd.
Houston, TX 77075
713-943-9776 Telephone
713-943-3846 Facsimile

CORE LABORATORIES

#5 (IBP-200) **ASTM D-6623** **130818-1**

Aromatic	C4		
	C5		
	C6	1.52	1.17
	C7	1.52	1.19
	C8	0.31	0.24
	C9	0.07	0.07
	C10	0.00	0.00
	C11	0.00	0.00

	%Wt	% Vol
Benzene	1.52	1.17

The analytical results , opinions or interpretations contained in this report are based upon information and material supplied by the client for whose exclusive and confidential use this report has been made. The analytical results, opinions, or interpretations expressed represent the best judgement of Core Laboratories. Core Laboratories, however, makes no warranty or representation, expressed or implied, of any type, and expressly disclaims same as to the productivity, proper operations or profitableness of any oil, gas, coal, or other mineral property, well or sand in connection with such report is used or relied upon for any reason whatsoever. The report shall not be reproduced, in whole or in part, without the written approval of Core Laboratories.

8210 Mosley Rd.
Houston, TX 77075
713 943-9776 Telephone
713 943-3846 Facsimile

CORE LABORATORIES

JOHN I FALKNER
FALKNER-RED RIVER LABS

1039 PEARL DRIVE
BOSSIER CITY, LA 71111

Sample Number: 130818-002
Sample Date:
Date Reported: 3/6/03
Date Received: 2/25/03
Sample ID: #5(200-300)
Description:

Analytical Report

Test	Result	Units	Method	Date	Analyst
Capillary Gas Chromatography	Attached		ASTM D-5134 Mod	2/27/03	PKT
Nitrogen Total by Chemilum.	< 1	ppm wt	ASTM D-4629	2/28/03	JT

Approved By: Jean Waits
Supervising Chemist

The analytical results, opinions or interpretations contained in this report are based upon information and material supplied by the client for whose exclusive and confidential use this report has been made. The analytical results, opinions or interpretations expressed represent the best judgment of Core Laboratories. Core Laboratories, however, makes no warranty or representation, express or implied, of any type, and expressly disclaims same as to the productivity, proper operations or profitableness of any oil, gas, coal, or other mineral, property, well or sand in connection with which such report is used or relied upon for any reason whatsoever. This report shall not be reproduced, in whole or in part, without the written approval of Core Laboratories.

Core Lab
PETROLEUM SERVICES

8210 Mosley Rd.
Houston, TX 77075
713-943-9776 Telephone
713-943-3846 Facsimile

CORE LABORATORIES

#5 (200-300) **ASTM D-6623** **130818-2**

Component Name	WT %	LV %	Mol %
Ethane	0.01	0.02	0.04
Propane	0.13	0.19	0.31
Isobutane	0.08	0.11	0.15
N-Butane	0.29	0.37	0.53
Isopentane	0.24	0.29	0.35
N-Pentane	0.38	0.45	0.56
2,2-Dimethylbutane	0.02	0.02	0.02
Cyclopentane	0.16	0.16	0.24
2,3-Dimethylbutane	0.10	0.11	0.12
2-Methylpentane	0.81	0.92	0.99
3-Methylpentane	0.65	0.72	0.80
N-Hexane	2.17	2.44	2.66
2,2-Dimethylpentane	0.10	0.11	0.11
Methylcyclopentane	2.17	2.15	2.72
2,4-Dimethylpentane	0.24	0.26	0.25
2,2,3-Trimethylbutane	0.02	0.02	0.02
Benzene	0.50	0.42	0.68
3,3-Dimethylpentane	0.07	0.07	0.07
Cyclohexane	2.72	2.59	3.41
2-Methylhexane	2.12	2.31	2.23
2,3-Dimethylpentane	0.66	0.70	0.70
1,1-Dimethylcyclopentane	0.62	0.61	0.67
3-Methylhexane	2.53	2.73	2.67
Cis-1,3-dimethylcyclopentane	1.27	1.26	1.37
Trans-1,3-dimethylcyclopentane	1.22	1.21	1.31
3-Ethylpentane	0.21	0.22	0.22
Trans-1,2-dimethylcyclopentane	1.94	1.91	2.09
2,2,4-Trimethylpentane	0.02	0.02	0.02
N-Heptane	5.66	6.13	5.93
Methylcyclohexane	10.07	9.68	10.78
1,1,3-Trimethylcyclopentane	1.19	1.18	1.12
Ethylcyclopentane	0.42	0.41	0.45
2,5-Dimethylhexane	0.53	0.57	0.49
2,4-Dimethylhexane	0.68	0.72	0.63
Trans,cis-1,2,4-trimethylcyclopentane	1.20	1.19	1.13
3,3-Dimethylhexane	0.16	0.17	0.15
Trans,cis-1,2,3-trimethylcyclopentane	1.23	1.21	1.16
2,3,4-Trimethylpentane	0.13	0.13	0.12
Toluene	3.78	3.23	4.31
2,3-Dimethylhexane	0.94	0.98	0.87
2-Methyl-3-Ethylpentane	0.12	0.12	0.11
2-Methylheptane	4.02	4.27	3.71
4-Methylheptane	1.24	1.30	1.15

Core Lab
PETROLEUM SERVICES

8210 Mosley Rd.
Houston, TX 77075
713-943-9776 Telephone
713-943-3846 Facsimile

CORE LABORATORIES

#5 (200-300) **ASTM D-5623** **130818-2**

Component Name	WT %	LV %	Mol %
3,4-Dimethylhexane	0.14	0.14	0.13
Cis,trans,1,2,4-trimethylcyclopentane	0.19	0.18	0.18
Cis-1,3 dimethylcyclohexane	4.47	4.32	4.18
3-Methylheptane	3.22	3.38	2.98
Trans-1,4-dimethylcyclohexane	1.95	1.89	1.83
1,1-Dimethylcyclohexane	0.62	0.59	0.58
Trans-1-ethyl-3-methylcyclopentane	0.30	0.29	0.28
Cis-1-ethyl-3-methylcyclopentane	0.24	0.23	0.23
Trans-1-ethyl-2-methylcyclopentane	0.53	0.51	0.50
1-Ethyl-1-methylcyclopentane	0.13	0.12	0.12
Trans-1,2,dimethylcyclohexane	2.24	2.14	2.11
Trans-1,3,dimethylcyclohexane	0.03	0.03	0.03
N-Octane	8.47	8.91	7.79
Isopropylcyclopentane	0.16	0.15	0.15
2,3,5-Trimethylhexane	0.07	0.07	0.06
Cis-1-ethyl-2-methylcyclopentane	0.06	0.06	0.06
2,2-Dimethylheptane	0.18	0.19	0.15
Cis-1,2-dimethylcyclohexane	0.35	0.33	0.33
2,4-Dimethylheptane	0.61	0.63	0.50
4,4-Dimethylheptane	0.05	0.05	0.04
Ethylcyclohexane	2.85	2.68	2.68
Cis,cis,1-3-5,trimethylcyclohexane	0.05	0.05	0.04
2,6-Dimethylheptane	0.85	0.89	0.70
1,1,3-Trimethylcyclohexane	1.09	1.04	0.91
C9 Naphthenes	0.87	0.83	0.73
2,5-Dimethylheptane	0.85	0.88	0.70
3,5-Dimethylheptane	0.15	0.15	0.12
Ethylbenzene	0.74	0.63	0.74
Trans,trans,1,2,4-trimethylcyclohexane	0.60	0.58	0.50
Cis,trans,1,3,5-trimethylcyclohexane	0.04	0.04	0.03
Meta-Xylene	2.60	2.23	2.59
Para-Xylene	0.83	0.71	0.83
2,3-Dimethylheptane	0.71	0.72	0.58
3,4-Dimethylheptane D/L	0.05	0.05	0.04
3,4-Dimethylheptane L/D	0.32	0.32	0.26
4-Methyloctane	0.56	0.58	0.46
2-Methyloctane	0.67	0.70	0.55
Cis,cis,1,2,3,trimethylcyclohexane	0.08	0.08	0.07
3-Ethylheptane	0.23	0.24	0.19
3-Methyloctane	0.75	0.77	0.62
Cis,trans,1,2,4,trimethylcyclohexane	0.03	0.03	0.03
Ortho-Xylene	0.97	0.82	0.96
Trans-1-Methyl-2-propylcyclopentane	0.02	0.02	0.02

Core Lab
PETROLEUM SERVICES

8210 Mosley Rd.
Houston, TX 77075
713-943-9776 Telephone
713-943-3846 Facsimile

CORE LABORATORIES

#5 (200-300) **ASTM D-6623** **130818-2**

Component Name	WT %	LV %	Mol %
Cis-1-ethyl-3-methylcyclohexane	0.13	0.12	0.11
Trans-1-ethyl-4-methylcyclohexane	0.49	0.45	0.41
Isobutylcyclopentane	0.35	0.33	0.29
1-Ethyl-1-methylcyclohexane	0.04	0.04	0.03
Cis,trans,1,2,3,trimethylcyclohexane	0.04	0.04	0.03
Trans,trans,1,2,3,trimethylcyclohexane	0.03	0.03	0.03
N-Nonane	2.06	2.13	1.70
Trans-1-ethyl-3-methylcyclohexane	0.25	0.24	0.21
Trans-1-ethyl-2-methylcyclohexane	0.07	0.07	0.06
Isopropylbenzene	0.07	0.06	0.06
2,2-Dimethyloctane	0.29	0.30	0.22
Isopropylcyclohexane	0.08	0.07	0.07
Cis-1-ethyl-2-methylcyclohexane	0.05	0.05	0.04
2,4-Dimethyloctane	0.20	0.21	0.15
2,6-Dimethyloctane	0.28	0.29	0.21
2,5-Dimethyloctane	0.06	0.06	0.04
N-propylcyclohexane	0.44	0.41	0.37
N-butylcyclopentane	0.09	0.09	0.08
2,7-Dimethyloctane	0.03	0.03	0.02
n-Propylbenzene	0.18	0.15	0.16
3,6-Dimethyloctane	0.08	0.08	0.06
1-Methyl-3-ethylbenzene	0.22	0.19	0.19
1-Methyl-4-ethylbenzene	0.12	0.10	0.11
2,3-Dimethyloctane	0.04	0.04	0.03
1,3,5-Trimethylbenzene	0.15	0.13	0.13
5-Methylnonane	0.05	0.05	0.04
4-Methylnonane	0.08	0.08	0.08
1-Methyl-2-ethylbenzene	0.12	0.10	0.11
3-Ethyloctane	0.02	0.02	0.01
1,2,3,5 Tet-methylcyclohexane	0.01	0.01	0.01
3-Methylnonane	0.09	0.09	0.07
1,2,3,4 Tet-methylcyclohexane	0.02	0.02	0.02
C10 Naphthenes	0.05	0.05	0.04
1,2,4-Trimethylbenzene	0.18	0.15	0.16
Cis-1-methyl-3-propylcyclohexane	0.05	0.05	0.04
Trans 1,4 diethylcyclohexane	0.05	0.05	0.04
Trans-1-methyl-3-propylcyclohexane	0.01	0.01	0.01
1-Ethyl-2,3-dimethylcyclohexane	0.01	0.01	0.01
Isobutylbenzene	0.02	0.02	0.02
Cis-1-methyl-4-propylcyclohexane	0.01	0.01	0.01
N-Decane	0.24	0.24	0.18
1,2,3-Trimethylbenzene	0.04	0.03	0.04
1-Methyl-3-isopropylbenzene	0.02	0.02	0.02

Core Lab
PETROLEUM SERVICES

8210 Mosley Rd.
Houston, TX 77075
713-943-9776 Telephone
713-943-3846 Facsimile

CORE LABORATORIES

#5 (200-300) **ASTM D-6623** **130818-2**

Component Name	WT %	LV %	Mol %
Cis 1,4 diethylcyclohexane	0.01	0.01	0.01
1-Methyl-4-isopropylbenzene	0.01	0.01	0.01
Indan (2,3-Dihydroindene)	0.01	0.01	0.01
Sec-butylcyclohexane	0.05	0.05	0.04
Butylcyclohexane	0.03	0.03	0.02
1,3-Diethylbenzene	0.01	0.01	0.01
C11 Naphthenes	0.01	0.01	0.01
1-Methyl-3-n-propylbenzene	0.02	0.02	0.02
1,4-Diethylbenzene	0.01	0.01	0.01
1,3-Dimethyl-5-ethylbenzene	0.01	0.01	0.01
Cis 1-methyl 4-ter-butylcyclohexane	0.01	0.01	0.01
4-Methyldecane	0.01	0.01	0.01
5-Methyldecane	0.01	0.01	0.01
1,4-Dimethyl-2-ethylbenzene	0.01	0.01	0.01
1,3-Dimethyl-4-ethylbenzene	0.01	0.01	0.01
3-Methyldecane	0.01	0.01	0.01
1,2-Dimethyl-4-ethylbenzene	0.01	0.01	0.01
N-Undecane	0.04	0.04	0.03
4-Methylundecane	0.01	0.01	0.01
C11 Aromatic	0.01	0.01	0.01
N-Dodecane	0.01	0.01	0.01
Tridecanes	0.01	0.01	0.01
Tetradecanes	0.02	0.02	0.01
Hexadecanes	0.01	0.01	0.00
	100.00	100.00	100.00

Mol WT of Sample	105.55
Mol WT C6 Plus	106.41
Density of Sample	0.7457
Density C6 Plus	0.7479

Summary by Group

Totals

Group	%Wt	% Vol
Paraffin	19.31	20.71
Isoparaf.	26.35	27.91
Olefin	0.00	0.00
Naphthene	43.49	42.01
Aromatic	10.65	9.10
Oxygenates		
Unidentified	0.20	0.27

Core Lab
PETROLEUM SERVICES

8210 Mosley Rd.
Houston, TX 77075
713-943-9776 Telephone
713-943-3846 Facsimile

CORE LABORATORIES

#5 (200-300) **ASTM D-6623** **130818-2**

Summary by Carbon

Totals

Group	%Wt	% Vol
C4	0.37	0.48
C5	0.78	0.90
C6	9.14	9.37
C7	30.93	30.86
C8	42.55	42.20
C9	14.04	13.90
C10	1.89	1.92
C11	0.10	0.10

Composite by Carbon

Group	C#	%Wt	% Vol
Paraffin	C4	0.29	0.37
	C5	0.38	0.45
	C6	2.17	2.44
	C7	5.66	6.13
	C8	8.47	8.91
	C9	2.06	2.13
	C10	0.24	0.24
	C11	0.04	0.04
Isoparaf.	C4	0.08	0.11
	C5	0.24	0.29
	C6	1.58	1.77
	C7	5.95	6.42
	C8	11.20	11.80
	C9	6.05	6.24
	C10	1.22	1.25
	C11	0.03	0.03
Olefin	C4	0.00	0.00
	C5	0.00	0.00
	C6	0.00	0.00
	C7	0.00	0.00
	C8	0.00	0.00
	C9	0.00	0.00
	C10	0.00	0.00
	C11		

Core Lab
PETROLEUM SERVICES

8210 Mosley Rd.
Houston, TX 77075
713-943-9776 Telephone
713-943-3846 Facsimile

CORE LABORATORIES

#5 (200-300) **ASTM D-6623** **130818-2**

Naphthene	C4		
	C5	0.16	0.16
	C6	4.89	4.74
	C7	15.54	15.08
	C8	17.74	17.10
	C9	4.84	4.61
	C10	0.30	0.30
	C11	0.02	0.02
Aromatic	C4		
	C5		
	C6	0.50	0.42
	C7	3.78	3.23
	C8	5.14	4.39
	C9	1.09	0.92
	C10	0.13	0.13
	C11	0.01	0.01

	%Wt	% Vol
Benzene	0.50	0.42

The analytical results , opinions or interpretations contained in this report are based upon information and material supplied by the client for whose exclusive and confidential use this report has been made. The analytical results, opinions, or interpretations expressed represent the best judgement of Core Laboratories. Core Laboratories, however, makes no warranty or representation, expressed or implied, of any type, and expressly disclaims same as to the productivity, proper operations or profitableness of any oil, gas, coal, or other mineral property, well or sand in connection with such report is used or relied upon for any reason whatsoever. The report shall not be reproduced, in whole or in part, without the written approval of Core Laboratories.

8210 Mosley Rd.
Houston, TX 77075
713 943-9776 Telephone
713 943-3846 Facsimile

CORE LABORATORIES

JOHN T FALKNER
FALKNER-RED RIVER LABS

1039 PEARL DRIVE
BOSSIER CITY, LA 71111

Sample Number: 130818-003
Sample Date:
Date Reported: 3/6/03
Date Received: 2/25/03
Sample ID: #5 (300-350)
Description:

Analytical Report

Test	Result	Units	Method	Date	Analyst
Capillary Gas Chromatography	Attached		ASTM D-5134 Mod	2/27/03	PKT

Approved By: Jean Waits
Supervising Chemist

The analytical results, opinions or interpretations contained in this report are based upon information and material supplied by the client for whose exclusive and confidential use this report has been made. The analytical results, opinions or interpretations expressed represent the best judgment of Core Laboratories. Core Laboratories, however, makes no warranty or representation, express or implied, of any type, and expressly disclaims same as to the productivity, proper operations or profitableness of any oil, gas, coal, or other mineral, property, well or sand in connection with which such report is used or relied upon for any reason whatsoever. This report shall not be reproduced, in whole or in part, without the written approval of Core Laboratories.

Core Lab
PETROLEUM SERVICES

8210 Mosley Rd.
Houston, TX 77075
713-943-9776 Telephone
713-943-3846 Facsimile

CORE LABORATORIES

#5 (300-350) **ASTM D-6623** **130818-3**

Component Name	WT %	LV %	Mol %
Propane	0.04	0.06	0.12
Isobutane	0.02	0.03	0.04
N-Butane	0.05	0.07	0.11
Isopentane	0.02	0.02	0.04
N-Pentane	0.03	0.04	0.05
Cyclopentane	0.01	0.01	0.02
2,3-Dimethylbutane	0.01	0.01	0.01
2-Methylpentane	0.04	0.05	0.06
3-Methylpentane	0.03	0.03	0.04
N-Hexane	0.09	0.11	0.13
Methylcyclopentane	0.08	0.08	0.12
2,4-Dimethylpentane	0.01	0.01	0.01
Benzene	0.02	0.02	0.03
Cyclohexane	0.09	0.09	0.14
2-Methylhexane	0.06	0.07	0.08
2,3-Dimethylpentane	0.02	0.02	0.03
1,1-Dimethylcyclopentane	0.02	0.02	0.03
3-Methylhexane	0.07	0.08	0.09
Cis-1,3-dimethylcyclopentane	0.04	0.04	0.05
Trans-1,3-dimethylcyclopentane	0.03	0.03	0.04
3-Ethylpentane	0.01	0.01	0.01
Trans-1,2-dimethylcyclopentane	0.05	0.05	0.07
N-Heptane	0.14	0.16	0.18
Methylcyclohexane	0.25	0.25	0.33
1,1,3-Trimethylcyclopentane	0.03	0.03	0.03
Ethylcyclopentane	0.01	0.01	0.01
2,5-Dimethylhexane	0.01	0.01	0.01
2,4-Dimethylhexane	0.02	0.02	0.02
Trans,cis-1,2,4-trimethylcyclopentane	0.03	0.03	0.03
Trans,cis-1,2,3-trimethylcyclopentane	0.03	0.03	0.03
Toluene	0.10	0.09	0.14
2,3-Dimethylhexane	0.02	0.02	0.02
2-Methylheptane	0.10	0.11	0.11
4-Methylheptane	0.03	0.03	0.03
Cis-1,3 dimethylcyclohexane	0.25	0.25	0.29
3-Methylheptane	0.08	0.09	0.09
Trans-1,4-dimethylcyclohexane	0.11	0.11	0.13
1,1-Dimethylcyclohexane	0.04	0.04	0.05
Trans-1-ethyl-3-methylcyclopentane	0.01	0.01	0.01
Cis-1-ethyl-3-methylcyclopentane	0.01	0.01	0.01
Trans-1-ethyl-2-methylcyclopentane	0.03	0.03	0.03
1-Ethyl-1-methylcyclopentane	0.01	0.01	0.01
Trans-1,2,dimethylcyclohexane	0.27	0.27	0.31

Core Lab
PETROLEUM SERVICES

8210 Mosley Rd.
Houston, TX 77075
713-943-9776 Telephone
713-943-3846 Facsimile

CORE LABORATORIES

#5 (300-350) **ASTM D-6623** **130818-3**

Component Name	WT %	LV %	Mol %
N-Octane	0.81	0.89	0.91
Isopropylcyclopentane	0.04	0.04	0.05
2,3,5-Trimethylhexane	0.02	0.02	0.02
Cis-1-ethyl-2-methylcyclopentane	0.01	0.01	0.01
2,2-Dimethylheptane	0.07	0.08	0.07
Cis-1,2-dimethylcyclohexane	0.14	0.14	0.16
2,4-Dimethylheptane	0.29	0.31	0.29
4,4-Dimethylheptane	0.03	0.03	0.03
Ethylcyclohexane	1.59	1.56	1.83
Cis,cis,1-3-5,trimethylcyclohexane	0.04	0.04	0.04
2,6-Dimethylheptane	0.50	0.55	0.50
1,1,3-Trimethylcyclohexane	1.21	1.20	1.23
C9 Naphthenes	2.00	1.99	2.04
2,5-Dimethylheptane	0.51	0.55	0.51
3,5-Dimethylheptane	0.12	0.13	0.12
Ethylbenzene	0.40	0.36	0.49
Trans,trans,1,2,4-trimethylcyclohexane	1.26	1.27	1.29
Cis,trans,1,3,5-trimethylcyclohexane	0.07	0.07	0.07
Meta-Xylene	2.33	2.09	2.83
Para-Xylene	0.69	0.62	0.84
2,3-Dimethylheptane	1.08	1.15	1.08
3,4-Dimethylheptane D/L	0.08	0.08	0.08
3,4-Dimethylheptane L/D	0.42	0.45	0.42
4-Methyloctane	1.07	1.15	1.07
2-Methyloctane	1.40	1.52	1.41
Cis,cis,1,2,3,trimethylcyclohexane	0.17	0.17	0.17
3-Ethylheptane	0.68	0.74	0.68
3-Methyloctane	1.87	2.01	1.88
Cis,trans,1,2,4,trimethylcyclohexane	0.10	0.10	0.10
Ortho-Xylene	1.88	1.66	2.28
Trans-1-Methyl-2-propylcyclopentane	0.08	0.08	0.08
Cis-1-ethyl-3-methylcyclohexane	0.49	0.48	0.50
Trans-1-ethyl-4-methylcyclohexane	2.29	2.22	2.34
Isobutylcyclopentane	1.61	1.60	1.64
1-Ethyl-1-methylcyclohexane	0.14	0.14	0.14
Cis,trans,1,2,3,trimethylcyclohexane	0.23	0.23	0.23
Trans,trans,1,2,3,trimethylcyclohexane	0.23	0.22	0.23
N-Nonane	10.82	11.69	10.90
Trans-1-ethyl-3-methylcyclohexane	1.69	1.67	1.72
Trans-1-ethyl-2-methylcyclohexane	0.47	0.47	0.48
Cis-1-ethyl-4-methylcyclohexane	0.01	0.01	0.01
Isopropylbenzene	0.39	0.35	0.42
2,2-Dimethyloctane	2.04	2.18	1.85

Core Lab
PETROLEUM SERVICES

8210 Mosley Rd.
Houston, TX 77075
713-943-9776 Telephone
713-943-3846 Facsimile

CORE LABORATORIES

#5 (300-350) **ASTM D-6623** **130818-3**

Component Name	WT %	LV %	Mol %
Isopropylcyclohexane	0.72	0.70	0.73
Cis-1-ethyl-2-methylcyclohexane	0.45	0.45	0.46
2,4-Dimethyloctane	1.77	1.91	1.60
2,6-Dimethyloctane	3.36	3.57	3.04
2,5-Dimethyloctane	0.63	0.68	0.57
N-propylcyclohexane	4.09	3.99	4.17
N-butylcyclopentane	0.93	0.92	0.95
2,7-Dimethyloctane	0.35	0.38	0.32
n-Propylbenzene	1.73	1.56	1.85
3,6-Dimethyloctane	1.07	1.13	0.97
1-Methyl-3-ethylbenzene	2.46	2.20	2.64
1-Methyl-4-ethylbenzene	1.56	1.40	1.67
3,4-Dimethyloctane	0.05	0.05	0.05
2,3-Dimethyloctane	0.81	0.85	0.73
1,3,5-Trimethylbenzene	2.59	2.32	2.78
5-Methylnonane	0.70	0.74	0.63
4-Methylnonane	1.44	1.53	1.30
1-Methyl-2-ethylbenzene	1.43	1.26	1.53
2-Methylnonane	0.70	0.75	0.63
3-Ethyloctane	0.51	0.54	0.46
1,2,3,5 Tet-methylcyclohexane	0.24	0.24	0.22
3-Methylnonane	1.75	1.85	1.58
1,2,3,4 Tet-methylcyclohexane	0.45	0.44	0.41
C10 Naphthenes	2.03	2.00	1.87
C10 Paraffin	0.83	0.86	0.68
1,2,4-Trimethylbenzene	3.51	3.10	3.76
Cis-1-methyl-3-propylcyclohexane	1.07	1.06	0.98
Trans 1,4 diethylcyclohexane	1.01	1.00	0.93
Trans-1-methyl-3-propylcyclohexane	0.18	0.18	0.17
1-Ethyl-2,3-dimethylcyclohexane	0.18	0.18	0.17
Isobutylbenzene	0.41	0.37	0.39
Cis-1-methyl-4-propylcyclohexane	0.23	0.23	0.21
sec-Butylbenzene	0.32	0.29	0.31
N-Decane	5.02	5.32	4.55
1,2,3,4 Tet-methylcyclohexane	0.19	0.19	0.17
Trans 1,3 diethylcyclohexane	0.11	0.11	0.10
1,2,3-Trimethylbenzene	0.77	0.67	0.83
Trans 1,2 diethylcyclohexane	0.12	0.12	0.11
1-Methyl-3-isopropylbenzene	0.24	0.22	0.23
Cis 1,4 diethylcyclohexane	0.26	0.26	0.24
1-Methyl-4-isopropylbenzene	0.18	0.16	0.17
Indan (2,3-Dihydroindene)	0.28	0.23	0.31
Sec-butylcyclohexane	0.99	0.98	0.91

Core Lab
PETROLEUM SERVICES

8210 Mosley Rd.
Houston, TX 77075
713-943-9776 Telephone
713-943-3846 Facsimile

CORE LABORATORIES

#5 (300-350) **ASTM D-5623** **130818-3**

Component Name	WT %	LV %	Mol %
Butylcyclohexane	0.62	0.60	0.57
1,3-Diethylbenzene	0.23	0.21	0.22
C11 Naphthenes	0.45	0.44	0.38
1-Methyl-3-n-propylbenzene	0.38	0.34	0.36
1-Methyl-4-n-propylbenzene	0.11	0.10	0.11
1,4-Diethylbenzene	0.15	0.13	0.14
1,3-Dimethyl-5-ethylbenzene	0.20	0.18	0.19
1,2-Diethylbenzene	0.10	0.09	0.10
1-Methyl-2-n-propylbenzene	0.14	0.12	0.13
Cis 1-methyl 4-ter-butylcyclohexane	0.21	0.20	0.18
C11 Paraffins	0.47	0.49	0.39
4-Methyldecane	0.31	0.32	0.26
5-Methyldecane	0.18	0.19	0.15
1,4-Dimethyl-2-ethylbenzene	0.33	0.29	0.32
1,3-Dimethyl-4-ethylbenzene	0.18	0.16	0.17
3-Methyldecane	0.18	0.19	0.15
1,2-Dimethyl-4-ethylbenzene	0.17	0.15	0.16
1,3-Dimethyl-2-ethylbenzene	0.06	0.05	0.06
Tricyclodecane	0.15	0.15	0.14
1-Methylindan	0.08	0.07	0.08
1,2-Dimethyl-3-Ethylbenzene	0.10	0.09	0.10
N-Undecane	1.04	1.09	0.86
1,2,4,5-Tetramethylbenzene	0.05	0.04	0.05
1,2,3,5-Tetramethylbenzene	0.10	0.09	0.10
C11 Unidentified	0.42	0.41	0.34
4-Methylindan	0.07	0.06	0.07
5-Methylindan	0.04	0.03	0.04
1,2,3,4-Tetramethylbenzene	0.06	0.05	0.06
6-Methylundecane	0.08	0.08	0.06
5-Methylundecane	0.02	0.02	0.02
4-Methylundecane	0.04	0.04	0.03
Naphthalene	0.03	0.02	0.03
3-Methylundecane	0.01	0.01	0.01
C11 Aromatic	0.38	0.34	0.33
N-Dodecane	0.25	0.26	0.19
Dodecanes	0.55	0.50	0.44
2-Methylnaphthalene	0.03	0.02	0.03
1-Methylnaphthalene	0.01	0.01	0.01
Tridecanes	0.21	0.20	0.15
N-Tridecane	0.09	0.09	0.06
Tetradecanes	0.07	0.07	0.05
N-Tetradecane	0.04	0.04	0.03
Pentadecanes	0.03	0.03	0.02

Core Lab
PETROLEUM SERVICES

8210 Mosley Rd.
Houston, TX 77075
713-943-9776 Telephone
713-943-3846 Facsimile

CORE LABORATORIES

#5 (300-350) **ASTM D-6623** **130818-3**

Component Name	WT %	LV %	Mol %
N-Pentadecane	0.02	0.02	0.01
Hexadecanes	0.01	0.01	0.01
N-Hexadecane	0.01	0.01	0.01
N-Heptadecane	0.01	0.01	0.01
Pristane	0.01	0.01	0.00
Octadecanes	0.01	0.01	0.01
	100.00	100.00	100.00

Mol WT of Sample	128.84
Mol WT C6 Plus	129.10
Density of Sample	0.7798
Density C6 Plus	0.7802

Summary by Group

Totals

Group	%Wt	% Vol
Paraffin	18.00	19.37
Isoparaf.	25.92	27.67
Olefin	0.00	0.00
Naphthene	29.95	29.55
Aromatic	24.29	21.61
Oxygenates		
Unidentified	1.84	1.80

Summary by Carbon

Totals

Group	%Wt	% Vol
C4	0.07	0.10
C5	0.06	0.07
C6	0.36	0.39
C7	0.81	0.84
C8	8.97	8.47
C9	51.96	51.57
C10	32.59	33.39
C11	3.34	3.37

8210 Mosley Rd.
Houston, TX 77075
713-943-9776 Telephone
713-943-3846 Facsimile

CORE LABORATORIES

#5 (300-350) ASTM D-6623 130818-3

Composite by Carbon

Group	C#	%Wt	% Vol
Paraffin	C4	0.05	0.07
	C5	0.03	0.04
	C6	0.09	0.11
	C7	0.14	0.16
	C8	0.81	0.89
	C9	10.82	11.69
	C10	5.02	5.32
	C11	1.04	1.09
Isoparaf.	C4	0.02	0.03
	C5	0.02	0.02
	C6	0.08	0.09
	C7	0.17	0.19
	C8	0.26	0.28
	C9	8.14	8.77
	C10	16.01	17.02
	C11	1.22	1.27
Olefin	C4	0.00	0.00
	C5	0.00	0.00
	C6	0.00	0.00
	C7	0.00	0.00
	C8	0.00	0.00
	C9	0.00	0.00
	C10	0.00	0.00
	C11		
Naphthene	C4		
	C5	0.01	0.01
	C6	0.17	0.17
	C7	0.40	0.40
	C8	2.60	2.57
	C9	18.28	18.02
	C10	7.83	7.74
	C11	0.66	0.64

8210 Mosley Rd.
Houston, TX 77075
713-943-9776 Telephone
713-943-3846 Facsimile

CORE LABORATORIES

[redacted] **ASTM D-6623** **130818-3**

Aromatic	C4		
	C5		
	C6	0.02	0.02
	C7	0.10	0.09
	C8	5.30	4.73
	C9	14.72	13.09
	C10	3.73	3.31
	C11	0.42	0.37

	%Wt	% Vol
Benzene	0.02	0.02

The analytical results , opinions or interpretations contained in this report are based upon information and material supplied by the client for whose exclusive and confidential use this report has been made. The analytical results, opinions, or interpretations expressed represent the best judgement of Core Laboratories. Core Laboratories, however, makes no warranty or representation, expressed or implied, of any type, and expressly disclaims same as to the productivity, proper operations or profitableness of any oil, gas, coal, or other mineral property, well or sand in connection with such report is used or relied upon for any reason whatsoever. The report shall not be reproduced, in whole or in part, without the written approval of Core Laboratories.

8210 Mosley Rd.
Houston, TX 77075
713-943-9776 Telephone
713-943-3846 Facsimile

CORE LABORATORIES

Sample # 5 (350-500) **ASTM D-6623** **131514-2**

Component Name	WT %	LV %	Mol %
Isobutane	0.01	0.01	0.03
N-Heptane	0.01	0.01	0.02
Methylcyclohexane	0.01	0.01	0.02
3-Methylheptane	0.01	0.01	0.01
N-Octane	0.01	0.01	0.01
Ethylcyclohexane	0.02	0.02	0.03
1,1,3-Trimethylcyclohexane	0.02	0.02	0.03
C9 Naphthenes	0.04	0.04	0.05
Trans,trans,1,2,4-trimethylcyclohexane	0.02	0.02	0.03
Meta-Xylene	0.03	0.03	0.05
Para-Xylene	0.01	0.01	0.02
2,3-Dimethylheptane	0.02	0.02	0.03
4-Methyloctane	0.02	0.02	0.03
2-Methyloctane	0.02	0.02	0.03
3-Ethylheptane	0.02	0.02	0.03
3-Methyloctane	0.03	0.03	0.04
Ortho-Xylene	0.03	0.03	0.05
Cis-1-ethyl-3-methylcyclohexane	0.01	0.01	0.01
Trans-1-ethyl-4-methylcyclohexane	0.06	0.06	0.08
Isobutylcyclopentane	0.05	0.05	0.06
Cis,trans,1,2,3,trimethylcyclohexane	0.01	0.01	0.01
Trans,trans,1,2,3,trimethylcyclohexane	0.01	0.01	0.01
N-Nonane	0.27	0.30	0.34
Trans-1-ethyl-3-methylcyclohexane	0.08	0.08	0.10
Trans-1-ethyl-2-methylcyclohexane	0.02	0.02	0.03
Isopropylbenzene	0.01	0.01	0.01
2,2-Dimethyloctane	0.04	0.04	0.05
Isopropylcyclohexane	0.09	0.09	0.12
Cis-1-ethyl-2-methylcyclohexane	0.02	0.02	0.03
2,4-Dimethyloctane	0.09	0.10	0.10
2,6-Dimethyloctane	0.27	0.30	0.31
2,5-Dimethyloctane	0.05	0.06	0.06
N-propylcyclohexane	0.27	0.28	0.35
N-butylcyclopentane	0.06	0.06	0.08
2,7-Dimethyloctane	0.03	0.03	0.03
n-Propylbenzene	0.19	0.18	0.26
3,6-Dimethyloctane	0.09	0.10	0.10
1-Methyl-3-ethylbenzene	0.21	0.20	0.28
1-Methyl-4-ethylbenzene	0.21	0.20	0.28
2,3-Dimethyloctane	0.23	0.25	0.26
1,3,5-Trimethylbenzene	0.33	0.31	0.45
4-Ethyloctane	0.10	0.11	0.11
5-Methylnonane	0.12	0.13	0.14

8210 Mosley Rd.
Houston, TX 77075
713-943-9776 Telephone
713-943-3846 Facsimile

CORE LABORATORIES

Sample # 5 (350-500) **ASTM D-6623** **131514-2**

Component Name	WT %	LV %	Mol %
4-Methylnonane	0.24	0.27	0.27
1-Methyl-2-ethylbenzene	0.17	0.16	0.23
2-Methylnonane	0.24	0.27	0.27
3-Ethyloctane	0.14	0.15	0.16
1,2,3,5 Tet-methylcyclohexane	0.08	0.08	0.09
3-Methylnonane	0.48	0.53	0.55
1,2,3,4 Tet-methylcyclohexane	0.19	0.20	0.22
C10 Naphthenes	0.36	0.37	0.42
C10 Paraffin	0.14	0.15	0.15
1,2,4-Trimethylbenzene	0.96	0.89	1.30
Cis-1-methyl-3-propylcyclohexane	0.52	0.54	0.60
Trans 1,4 diethylcyclohexane	0.49	0.50	0.57
Trans-1-methyl-3-propylcyclohexane	0.09	0.09	0.10
1-Ethyl-2,3-dimethylcyclohexane	0.10	0.10	0.12
Isobutylbenzene	0.26	0.25	0.31
Cis-1-methyl-4-propylcyclohexane	0.14	0.14	0.16
N-Decane	3.02	3.35	3.45
1,2,3,4 Tet-methylcyclohexane	0.15	0.15	0.17
Trans 1,3 diethylcyclohexane	0.11	0.11	0.13
1,2,3-Trimethylbenzene	0.49	0.44	0.66
Trans 1,2 diethylcyclohexane	0.13	0.13	0.15
1-Methyl-3-isopropylbenzene	0.16	0.15	0.19
Cis 1,4 diethylcyclohexane	0.20	0.21	0.23
1-Methyl-4-isopropylbenzene	0.19	0.18	0.23
Indan (2,3-Dihydroindene)	0.26	0.22	0.36
Sec-butylcyclohexane	1.20	1.24	1.39
Butylcyclohexane	1.16	1.17	1.34
1,3-Diethylbenzene	0.36	0.34	0.44
C11 Naphthenes	0.73	0.74	0.77
1-Methyl-3-n-propylbenzene	0.55	0.52	0.67
1-Methyl-4-n-propylbenzene	0.16	0.15	0.19
1,4-Diethylbenzene	0.25	0.23	0.30
1,3-Dimethyl-5-ethylbenzene	0.38	0.35	0.46
1,2-Diethylbenzene	0.22	0.20	0.27
1-Methyl-2-n-propylbenzene	0.28	0.26	0.34
Cis 1-methyl 4-ter-butylcyclohexane	0.52	0.53	0.55
4-Methyldecane	0.86	0.93	0.89
5-Methyldecane	0.45	0.49	0.47
1,4-Dimethyl-2-ethylbenzene	0.90	0.83	1.09
1,3-Dimethyl-4-ethylbenzene	0.52	0.48	0.63
3-Methyldecane	0.55	0.60	0.57
1,2-Dimethyl-4-ethylbenzene	0.49	0.45	0.59
1,3-Dimethyl-2-ethylbenzene	0.11	0.10	0.13

Core Lab
PETROLEUM SERVICES

8210 Mosley Rd.
Houston, TX 77075
713-943-9776 Telephone
713-943-3846 Facsimile

CORE LABORATORIES

Sample # 5 (350-500) **ASTM D-6623** **131514-2**

Component Name	WT %	LV %	Mol %
Tricyclodecane	0.69	0.70	0.82
1,2-Dimethyl-3-Ethylbenzene	0.45	0.41	0.54
N-Undecane	5.04	5.51	5.24
1,2,4,5-Tetramethylbenzene	0.31	0.28	0.38
1,2,3,5-Tetramethylbenzene	0.63	0.57	0.76
C11 Unidentified	2.36	2.40	2.38
4-Methylindan	0.53	0.45	0.65
5-Methylindan	0.46	0.39	0.57
1,2,3,4-Tetramethylbenzene	0.61	0.55	0.74
Tetralin	0.02	0.02	0.02
6-Methylundecane	0.98	1.06	0.93
5-Methylundecane	0.22	0.24	0.21
4-Methylundecane	0.51	0.55	0.49
Pentylbenzene	0.11	0.10	0.12
Naphthalene	0.56	0.46	0.71
3-Methylundecane	0.28	0.30	0.27
C11 Aromatic	7.74	7.24	8.48
N-Dodecane	4.97	5.36	4.74
Dodecanes	6.93	6.51	6.94
2-Methylnaphthalene	1.66	1.41	1.90
1-Methylnaphthalene	1.18	0.94	1.35
Tridecanes	10.80	10.83	10.03
N-Tridecane	5.08	5.43	4.48
Tetradecanes	10.74	10.63	9.18
N-Tetradecane	3.38	3.58	2.77
Pentadecanes	6.29	6.15	4.96
N-Pentadecane	1.51	1.59	1.15
Hexadecanes	1.75	1.70	1.28
N-Hexadecane	0.40	0.42	0.29
Heptadecanes	0.52	0.50	0.36
N-Heptadecane	0.15	0.16	0.10
Pristane	0.02	0.02	0.01
Octadecanes	0.17	0.16	0.11
N-Octadecane	0.05	0.05	0.03
Nonadecanes	0.03	0.03	0.02
N-Nonadecane	0.03	0.03	0.02
N-Eicosane	0.02	0.02	0.01
Heneicosanes	0.01	0.01	0.01
Docosanes	0.01	0.01	0.01
Unidentified	0.55	0.65	0.59
	100.00	100.00	100.00

8210 Mosley Rd.
Houston, TX 77075
713-943-9776 Telephone
713-943-3846 Facsimile

CORE LABORATORIES

Sample # 5 (350-500) **ASTM D-6623** **131514-2**

Mol WT of Sample	162.46
Mol WT C6 Plus	162.49
Density of Sample	0.8134
Density C6 Plus	0.8135
RON	2.8
MON	2.4

Summary by Group

Totals

Group	%Wt	% Vol
Paraffin	8.35	9.18
Isoparaf.	5.23	5.70
Olefin	0.00	0.00
Naphthene	7.65	7.80
Aromatic	21.99	19.99
Oxygenates		
Unidentified	56.78	57.33

Summary by Carbon

Totals

Group	%Wt	% Vol
C4	0.01	0.01
C5	0.00	0.00
C6	0.00	0.00
C7	0.02	0.02
C8	0.11	0.11
C9	3.97	3.79
C10	19.29	19.19
C11	19.82	19.55

Composite by Carbon

Group	C#	%Wt	% Vol
Paraffin	C4	0.00	0.00
	C5	0.00	0.00
	C6	0.00	0.00
	C7	0.01	0.01
	C8	0.01	0.01
	C9	0.27	0.30
	C10	3.02	3.35
	C11	5.04	5.51

Core Lab
PETROLEUM SERVICES

8210 Mosley Rd.
Houston, TX 77075
713-943-9776 Telephone
713-943-3846 Facsimile

CORE LABORATORIES

Sample # 5 (350-500) **ASTM D-6623** **131514-2**

Isoparaf.	C4	0.01	0.01
	C5	0.00	0.00
	C6	0.00	0.00
	C7	0.00	0.00
	C8	0.01	0.01
	C9	0.11	0.11
	C10	2.26	2.49
	C11	2.84	3.08
Olefin	C4	0.00	0.00
	C5	0.00	0.00
	C6	0.00	0.00
	C7	0.00	0.00
	C8	0.00	0.00
	C9	0.00	0.00
	C10	0.00	0.00
	C11		
Naphthene	C4		
	C5	0.00	0.00
	C6	0.00	0.00
	C7	0.01	0.01
	C8	0.02	0.02
	C9	0.76	0.77
	C10	5.61	5.73
	C11	1.25	1.27
Aromatic	C4		
	C5		
	C6	0.00	0.00
	C7	0.00	0.00
	C8	0.07	0.07
	C9	2.83	2.61
	C10	8.40	7.82
	C11	10.69	9.69

The analytical results , opinions or interpretations contained in this report are based upon information and material supplied by the client for whose exclusive and confidential use this report has been made. The analytical results, opinions, or interpretations expressed represent the best judgement of Core Laboratories. Core Laboratories, however, makes no warranty or representation, expressed or implied, of any type, and expressly disclaims same as to the productivity, proper operations or profitableness of any oil, gas, coal, or other mineral property, well or sand in connection with such report is used or relied upon for any reason whatsoever. The report shall not be reproduced, in whole or in part, without the written approval of Core Laboratories.

Core Lab
PETROLEUM SERVICES

8210 Mosley Rd.
Houston, TX 77075
713-943-9776 Telephone
713-943-3846 Facsimile

CORE LABORATORIES

Sample # 5 (500-650) **ASTM D-6623** **131514-3**

Component Name	WT %	LV %	Mol %
Ethane	0.01	0.02	0.08
Propane	0.06	0.10	0.32
Isobutane	0.01	0.01	0.04
Isobutylene	0.06	0.08	0.25
N-Butane	0.07	0.10	0.28
Trans-2-butene	0.01	0.01	0.04
Cis-2-butene	0.01	0.01	0.04
3-Methyl-1-butene	0.01	0.01	0.03
Isopentane	0.04	0.05	0.13
1-Pentene	0.05	0.06	0.17
2-Methyl-1-butene	0.03	0.04	0.10
N-Pentane	0.09	0.12	0.29
Trans-2-pentene	0.01	0.01	0.03
2-Methyl-2-butene	0.02	0.03	0.07
Cyclopentene	0.01	0.01	0.03
4-Methyl-1-pentene	0.03	0.04	0.08
3-Methyl-1-pentene	0.01	0.01	0.03
Cyclopentane	0.01	0.01	0.03
2,3-Dimethylbutane	0.01	0.01	0.03
2-Methylpentane	0.04	0.05	0.11
3-Methylpentane	0.02	0.02	0.05
2-Methyl-1-pentene	0.02	0.02	0.06
1-Hexene	0.06	0.07	0.17
N-Hexane	0.09	0.11	0.25
2-Methyl-2-pentene	0.01	0.01	0.03
4-Methylcyclopentene	0.01	0.01	0.03
Methylcyclopentane	0.03	0.03	0.08
2,4-Dimethyl-1-pentene	0.01	0.01	0.02
1-Methylcyclopentene	0.02	0.02	0.06
3-Methyl-1-hexene	0.01	0.01	0.02
5-Methyl-1-hexene	0.01	0.01	0.02
Cyclohexane	0.02	0.02	0.06
4-Methyl-trans-2-hexene	0.03	0.04	0.07
2-Methylhexane	0.02	0.02	0.05
2,3-Dimethylpentane	0.01	0.01	0.02
Cyclohexene	0.01	0.01	0.03
3-Methylhexane	0.03	0.04	0.07
Cis-1,3-dimethylcyclopentane	0.01	0.01	0.02
3-Ethylpentane	0.02	0.02	0.05
Trans-1,2-dimethylcyclopentane	0.01	0.01	0.02
2,2,4-Trimethylpentane	0.07	0.08	0.14
Trans-3-heptene	0.01	0.01	0.02
N-Heptane	0.11	0.13	0.26

8210 Mosley Rd.
Houston, TX 77075
713-943-9776 Telephone
713-943-3846 Facsimile

CORE LABORATORIES

Sample # 5 (500-650) **ASTM D-6623** **131514-3**

Component Name	WT %	LV %	Mol %
3-Methyl-trans-3-hexene	0.02	0.02	0.05
3-Ethyl-2-pentene	0.01	0.01	0.02
3-Methyl-trans-2-hexene	0.01	0.01	0.02
Methylcyclohexane	0.03	0.03	0.07
Ethylcyclopentane	0.01	0.01	0.02
2,5-Dimethylhexane	0.02	0.02	0.04
2,4-Dimethylhexane	0.01	0.01	0.02
Toluene	0.01	0.01	0.03
2-Methylheptane	0.07	0.08	0.14
4-Methylheptane	0.01	0.01	0.02
3-Methylheptane	0.02	0.02	0.04
Trans-4-octene	0.02	0.02	0.04
N-Octane	0.10	0.12	0.21
2,3,5-Trimethylhexane	0.01	0.01	0.02
Cis-1-ethyl-2-methylcyclopentane	0.01	0.01	0.02
Ethylcyclohexane	0.02	0.02	0.04
2,6-Dimethylheptane	0.01	0.01	0.02
1,1,3-Trimethylcyclohexane	0.01	0.01	0.02
C9 Naphthenes	0.01	0.01	0.02
Octenes	0.17	0.19	0.36
Ethylbenzene	0.01	0.01	0.02
Trans,trans,1,2,4-trimethylcyclohexane	0.05	0.05	0.09
Meta-Xylene	0.03	0.03	0.07
Para-Xylene	0.01	0.01	0.02
2,3-Dimethylheptane	0.03	0.03	0.05
4-Methyloctane	0.01	0.01	0.02
2-Methyloctane	0.01	0.01	0.02
3-Methyloctane	0.05	0.06	0.09
Ortho-Xylene	0.02	0.02	0.04
Cis-1-ethyl-3-methylcyclohexane	0.03	0.03	0.06
1-Nonene	0.06	0.06	0.11
Isobutylcyclopentane	0.01	0.01	0.02
N-Nonane	0.09	0.10	0.16
Trans-1-ethyl-3-methylcyclohexane	0.01	0.01	0.02
2,2-Dimethyloctane	0.01	0.01	0.02
Isopropylcyclohexane	0.01	0.01	0.02
2,6-Dimethyloctane	0.04	0.05	0.07
N-propylcyclohexane	0.01	0.01	0.02
3,6-Dimethyloctane	0.01	0.01	0.02
1-Methyl-3-ethylbenzene	0.01	0.01	0.02
1-Methyl-4-ethylbenzene	0.01	0.01	0.02
2,3-Dimethyloctane	0.03	0.03	0.05
1,3,5-Trimethylbenzene	0.01	0.01	0.02

8210 Mosley Rd.
Houston, TX 77075
713-943-9776 Telephone
713-943-3846 Facsimile

CORE LABORATORIES

Sample # 5 (500-650) **ASTM D-6623** **131514-3**

Component Name	WT %	LV %	Mol %
5-Methylnonane	0.01	0.01	0.02
4-Methylnonane	0.02	0.02	0.03
1-Methyl-2-ethylbenzene	0.02	0.02	0.04
3-Methylnonane	0.02	0.02	0.03
C10 Naphthenes	0.01	0.01	0.02
C10 Paraffin	0.01	0.01	0.02
1,2,4-Trimethylbenzene	0.03	0.03	0.06
Cis-1-methyl-3-propylcyclohexane	0.01	0.01	0.02
Isobutylbenzene	0.01	0.01	0.02
N-Decane	0.11	0.12	0.18
1,2,3-Trimethylbenzene	0.03	0.03	0.06
Indan (2,3-Dihydroindene)	0.01	0.01	0.02
Sec-butylcyclohexane	0.03	0.03	0.05
Butylcyclohexane	0.01	0.01	0.02
C11 Naphthenes	0.04	0.04	0.06
1,4-Diethylbenzene	0.01	0.01	0.02
1,3-Dimethyl-5-ethylbenzene	0.01	0.01	0.02
1-Methyl-2-n-propylbenzene	0.01	0.01	0.02
Cis 1-methyl 4-ter-butylcyclohexane	0.01	0.01	0.02
4-Methyldecane	0.01	0.01	0.02
5-Methyldecane	0.01	0.01	0.02
1,4-Dimethyl-2-ethylbenzene	0.02	0.02	0.04
1,3-Dimethyl-4-ethylbenzene	0.01	0.01	0.02
3-Methyldecane	0.01	0.01	0.02
1,2-Dimethyl-4-ethylbenzene	0.01	0.01	0.02
1,3-Dimethyl-2-ethylbenzene	0.01	0.01	0.02
Tricyclodecane	0.01	0.01	0.02
1,2-Dimethyl-3-Ethylbenzene	0.02	0.02	0.04
N-Undecane	0.13	0.15	0.20
1,2,4,5-Tetramethylbenzene	0.01	0.01	0.02
1,2,3,5-Tetramethylbenzene	0.01	0.01	0.02
C11 Unidentified	0.13	0.13	0.19
4-Methylindan	0.02	0.02	0.04
5-Methylindan	0.02	0.02	0.04
1,2,3,4-Tetramethylbenzene	0.02	0.02	0.04
4-Methylundecane	0.01	0.01	0.01
Naphthalene	0.02	0.02	0.04
C11 Aromatic	0.29	0.28	0.46
N-Dodecane	0.12	0.13	0.17
Dodecanes	0.17	0.16	0.25
Pentamethylbenzene	0.01	0.01	0.02
2-Methylnaphthalene	0.16	0.14	0.26
1-Methylnaphthalene	0.11	0.09	0.18

Core Lab
PETROLEUM SERVICES

8210 Mosley Rd.
Houston, TX 77075
713-943-9776 Telephone
713-943-3846 Facsimile

CORE LABORATORIES

Sample # 5 (500-650) **ASTM D-6623** **131514-3**

Component Name	WT %	LV %	Mol %
Tridecanes	0.45	0.46	0.60
N-Tridecane	0.32	0.35	0.41
Tetradecanes	2.45	2.48	3.03
N-Tetradecane	1.82	1.97	2.15
Pentadecanes	7.40	7.40	8.43
N-Pentadecane	3.48	3.74	3.85
Hexadecanes	9.47	9.39	10.00
N-Hexadecane	3.35	3.60	3.48
Heptadecanes	10.00	9.83	9.89
N-Heptadecane	3.60	3.84	3.52
Octadecanes	11.50	11.23	10.49
N-Octadecane	3.22	3.44	2.87
Nonadecanes	9.68	9.40	8.64
N-Nonadecane	3.13	3.31	2.74
Eicosanes	7.67	7.40	6.55
N-Eicosane	2.30	2.42	1.93
Heneicosanes	7.49	7.18	6.09
Docosanes	4.81	4.58	3.73
Tricosanes	2.46	2.33	1.82
Tetracosanes	0.78	0.74	0.55
Pentacosanes	0.16	0.15	0.11
Hexacosanes	0.08	0.07	0.05
Heptacosanes	0.03	0.03	0.02
Octacosanes Plus	0.23	0.21	0.11
	100.00	100.00	100.00

Mol WT of Sample	234.90
Mol WT C6 Plus	238.09
Density of Sample	0.8305
Density C6 Plus	0.8321

RON	1.4
MON	1.3

8210 Mosley Rd.
Houston, TX 77075
713-943-9776 Telephone
713-943-3846 Facsimile

CORE LABORATORIES

Sample # 5 (500-550) **ASTM D-6623** **131514-3**

Summary by Group

Totals	Group	%Wt	% Vol
	Paraffin	0.79	0.95
	Isoparaf.	0.70	0.77
	Olefin	0.74	0.84
	Naphthene	0.41	0.41
	Aromatic	0.98	0.93
	Oxygenates		
*	Unidentified	96.38	96.10

Summary by Carbon

Totals	Group	%Wt	% Vol
	C4	0.16	0.21
	C5	0.27	0.34
	C6	0.38	0.43
	C7	0.37	0.41
	C8	0.59	0.65
	C9	0.53	0.55
	C10	0.54	0.56
	C11	0.78	0.75

Composite by Carbon

Group	C#	%Wt	% Vol
Paraffin	C4	0.07	0.10
	C5	0.09	0.12
	C6	0.09	0.11
	C7	0.11	0.13
	C8	0.10	0.12
	C9	0.09	0.10
	C10	0.11	0.12
	C11	0.13	0.15
Isoparaf.	C4	0.01	0.01
	C5	0.04	0.05
	C6	0.07	0.08
	C7	0.08	0.09
	C8	0.20	0.22
	C9	0.12	0.13
	C10	0.15	0.16
	C11	0.03	0.03

8210 Mosley Rd.
Houston, TX 77075
713-943-9776 Telephone
713-943-3846 Facsimile

CORE LABORATORIES

Sample #5 (500-650) **ASTM D-6623** **131514-3**

Olefin	C4	0.08	0.10
	C5	0.13	0.16
	C6	0.17	0.19
	C7	0.11	0.12
	C8	0.19	0.21
	C9	0.06	0.06
	C10	0.00	0.00
	C11		
Naphthene	C4		
	C5	0.01	0.01
	C6	0.05	0.05
	C7	0.06	0.06
	C8	0.03	0.03
	C9	0.14	0.14
	C10	0.07	0.07
	C11	0.05	0.05
Aromatic	C4		
	C5		
	C6	0.00	0.00
	C7	0.01	0.01
	C8	0.07	0.07
	C9	0.12	0.12
	C10	0.21	0.21
	C11	0.57	0.52

The analytical results, opinions or interpretations contained in this report are based upon information and material supplied by the client for whose exclusive and confidential use this report has been made. The analytical results, opinions, or interpretations expressed represent the best judgement of Core Laboratories. Core Laboratories, however, makes no warranty or representation, expressed or implied, of any type, and expressly disclaims same as to the productivity, proper operations or profitableness of any oil, gas, coal, or other mineral property, well or sand in connection with such report is used or relied upon for any reason whatsoever. The report shall not be reproduced, in whole or in part, without the written approval of Core Laboratories.

FALKNER RED-RIVER LABORATORIES, INC.

1039 PEARL DRIVE·P.O. BOX 5438
BOSSIER CITY, LA 71111
PHONE: 318-746-2404·FAX: 318-742-1448

LAB REPORT #: 4-142168

REPORT DATE: April 17, 2003

SUPPLIER: John D. Jones Engineering

REQUESTED BY: John D. Jones

9.9%

DATE RECEIVED: March 1, 2003

Marcos Sample #12

Sample #	Crude #	Crude #	Crude #	Crude #	Crude #	Crude #
Grade	IBP-200	200-300	300-350	350-500	500-650	650-1025
Gravity	67.9	54.5	45.5	39.3	37.6	8.3
I.B.P.	100	197	288	378	148	
5% Recovered At	120	---	300	388	216	---
10% "	142	218	310	394	282	---
20%	162	226	314	404	396	---
30%	169	233	316	413	462	---
40%	184	237	320	420	515	---
50%	231	242	323	428	538	---
60%		248	327	437	557	---
70%		256	331	447	575	---
80%		263	335	457	594	---
90%		274	---	474	618	---
95%		---	---	486	637	---
End Point	231	346	340	524	650	---
Recovery	50.0	98.0	80.0	99.0	99.0	---
Residue	0.0	1.0	6.0	1.0	1.0	---
Loss	50.0	1.0	14.0	0.0	0.0	---
Specific Gravity	.7096	.7608	.7994	.8285	.8368	---
Sulfur, wt%	<.005	<.005	<.005	.005	.129	.624
Freeze Point	---	---	Below -65°C	---	---	---
Flash Point	---	---	92°F	---	---	---
Aromatics	---	---	18.3	16.4	---	---
Olefins	---	---	1.47	1.87	---	---
Saturate	---	---	80.23	81.73	---	---
Nitrogen	---	<1	---	---	---	---
Gross Heat of Combustion	---	---	19765	---	---	---
US Cetane Index	---	---	---	41.2	---	---
Yield L.V. %	3.5	5.0	4.3	10.0	23.0	54.2
Yield wt %	2.88	4.41	3.98	9.60	22.31	63.60
Smoke point	---	---	---	22	---	---
Cloud Point	---	---	---	-88°F	---	---
H2S	---	---	---	---	POS	---
RSH	---	---	---	---	Off Scale	---
Viscosity @100°	---	---	---	---	34.35 SUS	Solid
Viscosity @210°	---	---	---	---	---	271.6 SUS

REMARKS:

: The results of this test relate only to the items tested.
: This report will not be reproduced except in full, without the written approval of the laboratory.

Richard F. Hooker
FOR FALKNER RED RIVER LABORATORIES, INC

8210 Mosley Rd.
Houston, TX 77075
713 943-9776 Telephone
713 943-3846 Facsimile

CORE LABORATORIES

RICHARD MOSHER
FALKNER-RED RIVER LABS

1039 PEARL DRIVE
BOSSIER CITY, LA 71111

Date Reported: 4/22/03
Date Received: 4/10/03

Analytical Report

Test	Result	Units	Method	Date	Analyst
Sample Number: 131514-003	**Sample ID:**	**Sample # 5 (500-650)**			**Sample Rcvd:**
Sample Date:	**Description:**				**4/10/03**
Capillary Gas Chromatography	Attached		ASTM D-5134 Mod	4/11/03	PKT
Sample Number: 131514-004	**Sample ID:**	**Sample # 12 Crude**			**Sample Rcvd:**
Sample Date:	**Description:**				**4/10/03**
Simulated Distillation-Crude					
BP	79	Deg F	ASTM D-5307	4/21/03	DM
5 % off	210	Deg F			
10 % off	273	Deg F			
15 % off	327	Deg F			
20 % off	381	Deg F			
25 % off	430	Deg F			
30 % off	472	Deg F			
35 % off	509	Deg F			
40 % off	548	Deg F			
45 % off	582	Deg F			
50 % off	619	Deg F			
55 % off	660	Deg F			
60 % off	699	Deg F			
65 % off	741	Deg F			
70 % off	782	Deg F			
75 % off	822	Deg F			
80 % off	866	Deg F			
85 % off	918	Deg F			
90 % off	976	Deg F			
95 % off		Deg F			
% Recovered	91.9	@ 1000 Deg.			
% Residue	8.1	@ 1000 Deg.			

The analytical results, opinions or interpretations contained in this report are based upon information and material supplied by the client for whose exclusive and confidential use this report has been made. The analytical results, opinions or interpretations expressed represent the best judgment of Core Laboratories. Core Laboratories, however, makes no warranty or representation, express or implied, of any type, and expressly disclaims same as to the productivity, proper operations or profitableness of any oil, gas, coal, or other mineral, property, well or sand in connection with which such report is used or relied upon for any reason whatsoever. This report shall not be reproduced, in whole or in part, without the written approval of Core Laboratories.

8210 Mosley Rd.
Houston, TX 77075
713 943-9776 Telephone
713 943-3846 Facsimile

CORE LABORATORIES

Manos

JOHN I FALKNER
FALKNER-RED RIVER LABS

1039 PEARL DRIVE
BOSSIER CITY, LA 71111

Sample Number: 131169-001
Sample Date:
Date Reported: 3/26/03
Date Received: 3/18/03
Sample ID: Mancos Crude
Description:

Analytical Report

Test	Result	Units	Method	Date	Analyst
Nitrogen Total by Chemilum.	756	ppm wt	ASTM D-4629	3/24/03	JT

Approved By: Jean Waits
Supervising Chemist

The analytical results, opinions or interpretations contained in this report are based upon information and material supplied by the client for whose exclusive and confidential use this report has been made. The analytical results, opinions or interpretations expressed represent the best judgment of Core Laboratories. Core Laboratories, however, makes no warranty or representation, express or implied, of any type, and expressly disclaims same as to the productivity, proper operations or profitableness of any oil, gas, coal, or other mineral, property, well or sand in connection with which such report is used or relied upon for any reason whatsoever. This report shall not be reproduced, in whole or in part, without the written approval of Core Laboratories.

FALKNER RED-RIVER LABORATORIES, INC.

1039 PEARL DRIVE·P.O. BOX 5438
BOSSIER CITY, LA 71111
PHONE: 318-746-2404·FAX: 318-742-1448

LAB REPORT #: 4-142 681

REPORT DATE: March 18, 2003

SUPPLIER: John D. Jones Engineering

PAGE 1 OF 2

REQUESTED BY: John D. Jones

DATE RECEIVED: January 6, 2003

Product	Crude	Crude			
Grade	Mancos	#14			
Tank #	Battery 2	Dakota			
Sample #					
Date Shipped					
Gravity	32.5	41.3			
I.B.P.	162	124			
5% Recovered At	240	194			
10% "	304	232			
20%	405	285			
30%	496	354			
40%	563	427			
50%	634	507			
60%	695	587			
70%	712	673			
80%		724			
90%					
95%					
End Point	716(cracked)	732(cracked)			
Recovery	83.0	81.0			
Residue	16.5	18.0			
Loss	.5	1.0			
Specific Gravity	.8628	.8189			
RVP	.4	.6			
Pour Point	-40°F	+28°F			
Sulfur, wt%	.148	.027			
Flash, °F	+48°F	+34°F			
Salt content	.07	.05			
Nitrogen					

REMARKS:

A: The results of this test relate only to the items tested.
B: This report will not be reproduced except in full, without the written approval of the laboratory.

FOR FALKNER RED RIVER LABORATORIES, INC

8210 Mosley Rd.
Houston, TX 77075
713 943-9776 Telephone
713 943-3846 Facsimile

CORE LABORATORIES

JOHN I FALKNER
FALKNER-RED RIVER LABS

1039 PEARL DRIVE
BOSSIER CITY, LA 71111

Date Reported: 6/10/03
Date Received: 6/9/03

Analytical Report

Test	Result	Units	Method	Date	Analyst
Sample Number: 132369-001 **Sample Date:**	**Sample ID:** **Sample 5 Bottoms** **Description:**				**Sample Rcvd:** 6/9/03
Bromine Number	2.2	g/100g	ASTM D-1159	6/10/03	CB
Sample Number: 132369-002 **Sample Date:**	**Sample ID:** **Sample 12 Bottoms** **Description:**				**Sample Rcvd:** 6/9/03
Bromine Number	8.7	g/100g	ASTM D-1159	6/10/03	CB
Sample Number: 132369-003 **Sample Date:**	**Sample ID:** **Sample 14 Bottoms** **Description:**				**Sample Rcvd:** 6/9/03
Bromine Number	7.7	g/100g	ASTM D-1159	6/10/03	CB

Approved By: Pat Gideons
Laboratory Supervisor

The analytical results, opinions or interpretations contained in this report are based upon information and material supplied by the client for whose exclusive and confidential use this report has been made. The analytical results, opinions or interpretations expressed represent the best judgment of Core Laboratories. Core Laboratories, however, makes no warranty or representation, express or implied, of any type, and expressly disclaims same as to the productivity, proper operations or profitableness of any oil, gas, coal, or other mineral, property, well or sand in connection with which such report is used or relied upon for any reason whatsoever. This report shall not be reproduced, in whole or in part, without the written approval of Core Laboratories.

8210 Mosley Rd.
Houston, TX 77075
713 943-9776 Telephone
713 943-3846 Facsimile

CORE LABORATORIES

JOHN I FALKNER
FALKNER-RED RIVER LABS

1039 PEARL DRIVE
BOSSIER CITY, LA 71111

Sample Number: 131169-002
Sample Date:
Date Reported: 3/26/03
Date Received: 3/18/03
Sample ID: Hymes IBP 200
Description:

Analytical Report

Test	Result	Units	Method	Date	Analyst
Capillary Gas Chromatography	Attached		ASTM D-5134 Mod	3/19/03	PKT

Approved By: Jean Waits
Supervising Chemist

The analytical results, opinions or interpretations contained in this report are based upon information and material supplied by the client for whose exclusive and confidential use this report has been made. The analytical results, opinions or interpretations expressed represent the best judgment of Core Laboratories. Core Laboratories, however, makes no warranty or representation, express or implied, of any type, and expressly disclaims same as to the productivity, proper operations or profitableness of any oil, gas, coal, or other mineral, property, well or sand in connection with which such report is used or relied upon for any reason whatsoever. This report shall not be reproduced, in whole or in part, without the written approval of Core Laboratories.

Core Lab
PETROLEUM SERVICES

8210 Mosley Rd.
Houston, TX 77075
713-943-9776 Telephone
713-943-3846 Facsimile

CORE LABORATORIES

Mancos IBP-200 **ASTM D-6623** **131169-2**

Component Name	WT %	LV %	Mol %
Propane	0.14	0.19	0.27
Isobutane	0.43	0.53	0.63
N-Butane	2.67	3.19	3.92
2,2-Dimethylpropane	0.02	0.02	0.02
Isopentane	6.82	7.61	8.08
N-Pentane	7.58	8.37	8.96
2,2-Dimethylbutane	0.33	0.35	0.33
Cyclopentane	2.22	2.06	2.70
2,3-Dimethylbutane	1.49	1.56	1.48
2-Methylpentane	8.15	8.62	8.07
3-Methylpentane	6.93	7.21	6.87
N-Hexane	9.99	10.47	9.89
2,2-Dimethylpentane	0.50	0.51	0.43
Methylcyclopentane	12.36	11.40	12.53
2,4-Dimethylpentane	1.35	1.39	1.15
2,2,3-Trimethylbutane	0.12	0.12	0.10
Benzene	1.57	1.24	1.72
3,3-Dimethylpentane	0.21	0.21	0.18
Cyclohexane	7.89	7.01	8.01
2-Methylhexane	2.81	2.87	2.40
2,3-Dimethylpentane	2.12	2.11	1.81
1,1-Dimethylcyclopentane	1.62	1.49	1.41
3-Methylhexane	3.80	3.83	3.24
Cis-1,3-dimethylcyclopentane	2.93	2.72	2.55
Trans-1,3-dimethylcyclopentane	2.50	2.31	2.18
3-Ethylpentane	0.43	0.43	0.37
Trans-1,2-dimethylcyclopentane	3.21	2.96	2.79
2,2,4-Trimethylpentane	0.85	0.85	0.64
N-Heptane	1.75	1.77	1.49
Methylcyclohexane	3.40	3.06	2.96
1,1,3-Trimethylcyclopentane	0.50	0.46	0.38
Ethylcyclopentane	0.22	0.20	0.19
2,5-Dimethylhexane	0.10	0.10	0.07
2,4-Dimethylhexane	0.14	0.14	0.10
Trans,cis-1,2,4-trimethylcyclopentane	0.23	0.21	0.18
3,3-Dimethylhexane	0.02	0.02	0.01
Trans,cis-1,2,3-trimethylcyclopentane	0.22	0.20	0.17
2,3,4-Trimethylpentane	0.07	0.07	0.05
Toluene	0.43	0.34	0.40
2,3-Dimethylhexane	0.08	0.08	0.06
2-Methyl-3-Ethylpentane	0.01	0.01	0.01
2-Methylheptane	0.06	0.06	0.04
4-Methylheptane	0.02	0.02	0.01

8210 Mosley Rd.
Houston, TX 77075
713-943-9776 Telephone
713-943-3846 Facsimile

CORE LABORATORIES

Mancos IBP-200 **ASTM D-6623** **131169-2**

Component Name	WT %	LV %	Mol %
Cis-1,3 dimethylcyclohexane	0.11	0.10	0.08
Trans-1,4-dimethylcyclohexane	0.05	0.05	0.04
1,1-Dimethylcyclohexane	0.02	0.02	0.02
Trans-1-ethyl-2-methylcyclopentane	0.01	0.01	0.01
Trans-1,2,dimethylcyclohexane	0.04	0.04	0.03
N-Octane	0.03	0.03	0.02
Ethylcyclohexane	0.02	0.02	0.02
1,1,3-Trimethylcyclohexane	0.01	0.01	0.01
Trans,trans,1,2,4-trimethylcyclohexane	0.01	0.01	0.01
Meta-Xylene	0.01	0.01	0.01
2-Methyloctane	0.01	0.01	0.01
3-Methyloctane	0.02	0.02	0.01
Ortho-Xylene	0.01	0.01	0.01
Trans-1-ethyl-4-methylcyclohexane	0.02	0.02	0.01
Isobutylcyclopentane	0.02	0.02	0.01
N-Nonane	0.11	0.11	0.07
Trans-1-ethyl-3-methylcyclohexane	0.02	0.02	0.01
2,2-Dimethyloctane	0.02	0.02	0.01
Isopropylcyclohexane	0.01	0.01	0.01
2,4-Dimethyloctane	0.02	0.02	0.01
2,6-Dimethyloctane	0.04	0.04	0.02
N-propylcyclohexane	0.06	0.05	0.04
N-butylcyclopentane	0.01	0.01	0.01
n-Propylbenzene	0.03	0.02	0.02
3,6-Dimethyloctane	0.01	0.01	0.01
1-Methyl-3-ethylbenzene	0.03	0.02	0.02
1-Methyl-4-ethylbenzene	0.02	0.02	0.01
2,3-Dimethyloctane	0.01	0.01	0.01
1,3,5-Trimethylbenzene	0.03	0.02	0.02
5-Methylnonane	0.02	0.02	0.01
4-Methylnonane	0.02	0.02	0.01
1-Methyl-2-ethylbenzene	0.02	0.02	0.01
2-Methylnonane	0.02	0.02	0.01
3-Methylnonane	0.03	0.03	0.02
1,2,3,4 Tet-methylcyclohexane	0.01	0.01	0.01
1,2,4-Trimethylbenzene	0.07	0.06	0.05
Cis-1-methyl-3-propylcyclohexane	0.03	0.03	0.02
Trans 1,4 diethylcyclohexane	0.03	0.03	0.02
Isobutylbenzene	0.01	0.01	0.01
Cis-1-methyl-4-propylcyclohexane	0.01	0.01	0.01
N-Decane	0.17	0.16	0.10
1,2,3-Trimethylbenzene	0.03	0.02	0.02
1-Methyl-3-isopropylbenzene	0.01	0.01	0.01

Core Lab
PETROLEUM SERVICES

8210 Mosley Rd.
Houston, TX 77075
713-943-9776 Telephone
713-943-3846 Facsimile

CORE LABORATORIES

Mancos IBP-200 **ASTM D-6623** **131169-2**

Component Name	WT %	LV %	Mol %
Sec-butylcyclohexane	0.04	0.04	0.02
Butylcyclohexane	0.03	0.03	0.02
1,3-Diethylbenzene	0.01	0.01	0.01
C11 Naphthenes	0.01	0.01	0.01
1-Methyl-3-n-propylbenzene	0.02	0.02	0.01
1,4-Diethylbenzene	0.01	0.01	0.01
1,3-Dimethyl-5-ethylbenzene	0.01	0.01	0.01
1-Methyl-2-n-propylbenzene	0.01	0.01	0.01
Cis 1-methyl 4-ter-butylcyclohexane	0.01	0.01	0.01
4-Methyldecane	0.01	0.01	0.01
5-Methyldecane	0.02	0.02	0.01
1,4-Dimethyl-2-ethylbenzene	0.02	0.02	0.01
1,3-Dimethyl-4-ethylbenzene	0.01	0.01	0.01
C11 Paraffins	0.01	0.01	0.01
1,2-Dimethyl-4-ethylbenzene	0.01	0.01	0.01
Tricyclodecane	0.01	0.01	0.01
1,2-Dimethyl-3-Ethylbenzene	0.01	0.01	0.01
N-Undecane	0.06	0.06	0.03
C11 Aromatic	0.01	0.01	0.01
N-Dodecane	0.01	0.01	0.01
Tetradecanes	0.02	0.02	0.01
Pentadecanes	0.01	0.01	0.00
Hexadecanes	0.02	0.02	0.01
Heptadecanes	0.01	0.01	0.00
Octadecanes	0.02	0.02	0.01
Eicosanes	0.01	0.01	0.00
	100.00	100.00	100.00

Mol WT of Sample	85.43
Mol WT C6 Plus	90.06
Density of Sample	0.6974
Density C6 Plus	0.7172

8210 Mosley Rd.
Houston, TX 77075
713-943-9776 Telephone
713-943-3846 Facsimile

CORE LABORATORIES

Mancos IBP-200 **ASTM D-6623** **131169-2**

Summary by Group

Totals	Group	%Wt	% Vol
	Paraffin	22.36	24.16
	Isoparaf.	37.12	38.98
	Olefin	0.00	0.00
	Naphthene	37.89	34.65
	Aromatic	2.39	1.92
	Oxygenates		
	Unidentified	0.24	0.29
		100.00	100.00

Summary by Carbon

Totals	Group	%Wt	% Vol
	C4	3.10	3.72
	C5	16.64	18.06
	C6	48.71	47.86
	C7	27.40	26.32
	C8	2.60	2.51
	C9	0.53	0.47
	C10	0.65	0.64
	C11	0.13	0.13

Composite by Carbon

Group	C#	%Wt	% Vol
Paraffin	C4	2.67	3.19
	C5	7.58	8.37
	C6	9.99	10.47
	C7	1.75	1.77
	C8	0.03	0.03
	C9	0.11	0.11
	C10	0.17	0.16
	C11	0.06	0.06

Core Lab
PETROLEUM SERVICES

8210 Mosley Rd.
Houston, TX 77075
713-943-9776 Telephone
713-943-3846 Facsimile

CORE LABORATORIES

Mancos IBP-200 **ASTM D-6623** **131169-2**

Isoparaf.	C4	0.43	0.53
	C5	6.84	7.63
	C6	16.90	17.74
	C7	11.34	11.47
	C8	1.35	1.35
	C9	0.03	0.03
	C10	0.19	0.19
	C11	0.04	0.04
Olefin	C4	0.00	0.00
	C5	0.00	0.00
	C6	0.00	0.00
	C7	0.00	0.00
	C8	0.00	0.00
	C9	0.00	0.00
	C10	0.00	0.00
	C11		
Naphthene	C4		
	C5	2.22	2.06
	C6	20.25	18.41
	C7	13.88	12.74
	C8	1.20	1.11
	C9	0.16	0.15
	C10	0.16	0.16
	C11	0.02	0.02
Aromatic	C4		
	C5		
	C6	1.57	1.24
	C7	0.43	0.34
	C8	0.02	0.02
	C9	0.23	0.18
	C10	0.13	0.13
	C11	0.01	0.01

The analytical results , opinions or interpretations contained in this report are based upon information and material supplied by the client for whose exclusive and confidential use this report has been made. The analytical results, opinions, or interpretations expressed represent the best judgement of Core Laboratories. Core Laboratories, however, makes no warranty or representation, expressed or implied, of any type, and expressly disclaims same as to the productivity, proper operations or profitableness of any oil, gas, coal, or other mineral property, well or sand in connection with such report is used or relied upon for any reason whatsoever. The report shall not be reproduced, in whole or in part, without the written approval of Core Laboratories.

8210 Mosley Rd.
Houston, TX 77075
713 943-9776 Telephone
713 943-3846 Facsimile

CORE LABORATORIES

#12

JOHN I FALKNER
FALKNER-RED RIVER LABS

1039 PEARL DRIVE
BOSSIER CITY, LA 71111

Sample Number: 131169-003
Sample Date:
Date Reported: 3/26/03
Date Received: 3/18/03
Sample ID: [redacted]
Description:

Analytical Report

Test	Result	Units	Method	Date	Analyst
Capillary Gas Chromatography	Attached		ASTM D-5134 Mod	3/19/03	PKT
Nitrogen Total by Chemilum.	<1	ppm wt	ASTM D-4629	3/20/03	JT

Approved By: Jean Waits
Supervising Chemist

The analytical results, opinions or interpretations contained in this report are based upon information and material supplied by the client for whose exclusive and confidential use this report has been made. The analytical results, opinions or interpretations expressed represent the best judgment of Core Laboratories. Core Laboratories, however, makes no warranty or representation, express or implied, of any type, and expressly disclaims same as to the productivity, proper operations or profitableness of any oil, gas, coal, or other mineral, property, well or sand in connection with which such report is used or relied upon for any reason whatsoever. This report shall not be reproduced, in whole or in part, without the written approval of Core Laboratories.

Core Lab
PETROLEUM SERVICES

8210 Mosley Rd.
Houston, TX 77075
713-943-9776 Telephone
713-943-3846 Facsimile

CORE LABORATORIES

Mancos 200-300 **ASTM D-6623** **131169-3**

Component Name	WT %	LV %	Mol %
Propane	0.07	0.10	0.17
Isobutane	0.07	0.09	0.13
N-Butane	0.33	0.43	0.62
Isopentane	0.42	0.51	0.64
N-Pentane	0.39	0.47	0.59
2,2-Dimethylbutane	0.02	0.02	0.03
Cyclopentane	0.11	0.11	0.17
2,3-Dimethylbutane	0.07	0.08	0.09
2-Methylpentane	0.36	0.41	0.46
3-Methylpentane	0.34	0.38	0.43
N-Hexane	0.55	0.63	0.70
2,2-Dimethylpentane	0.06	0.07	0.07
Methylcyclopentane	1.05	1.05	1.37
2,4-Dimethylpentane	0.16	0.18	0.17
2,2,3-Trimethylbutane	0.02	0.02	0.02
Benzene	0.14	0.12	0.20
3,3-Dimethylpentane	0.06	0.06	0.07
Cyclohexane	1.38	1.33	1.79
2-Methylhexane	1.06	1.17	1.16
2,3-Dimethylpentane	0.84	0.91	0.92
1,1-Dimethylcyclopentane	0.59	0.59	0.66
3-Methylhexane	1.90	2.07	2.07
Cis-1,3-dimethylcyclopentane	1.51	1.52	1.68
Trans-1,3-dimethylcyclopentane	1.47	1.47	1.64
3-Ethylpentane	0.29	0.31	0.32
Trans-1,2-dimethylcyclopentane	1.96	1.96	2.18
2,2,4-Trimethylpentane	1.18	1.28	1.13
N-Heptane	2.28	2.50	2.49
Methylcyclohexane	8.23	8.04	9.15
1,1,3-Trimethylcyclopentane	2.06	2.07	2.01
Ethylcyclopentane	0.76	0.74	0.85
2,5-Dimethylhexane	0.74	0.80	0.71
2,4-Dimethylhexane	1.03	1.10	0.99
Trans,cis-1,2,4-trimethylcyclopentane	1.88	1.89	1.83
3,3-Dimethylhexane	0.19	0.20	0.18
Trans,cis-1,2,3-trimethylcyclopentane	2.22	2.21	2.16
2,3,4-Trimethylpentane	1.06	1.11	1.02
Toluene	2.06	1.78	2.45
2,3-Dimethylhexane	1.57	1.65	1.50
2-Methyl-3-Ethylpentane	0.22	0.23	0.21
1,1,2-trimethylcyclopentane	0.01	0.01	0.01
2-Methylheptane	1.82	1.96	1.74
4-Methylheptane	1.00	1.06	0.96

8210 Mosley Rd.
Houston, TX 77075
713-943-9776 Telephone
713-943-3846 Facsimile

CORE LABORATORIES

Mancos 200-300 **ASTM D-6623** **131169-3**

Component Name	WT %	LV %	Mol %
3,4-Dimethylhexane	0.23	0.24	0.22
Cis,trans,1,2,4-trimethylcyclopentane	0.29	0.29	0.28
Cis-1,3 dimethylcyclohexane	6.26	6.13	6.09
3-Methylheptane	1.46	1.55	1.40
Trans-1,4-dimethylcyclohexane	2.53	2.49	2.47
1,1-Dimethylcyclohexane	0.78	0.75	0.76
2,2,5-Trimethylhexane	0.24	0.25	0.20
Trans-1-ethyl-3-methylcyclopentane	0.53	0.52	0.52
Cis-1-ethyl-3-methylcyclopentane	0.47	0.46	0.46
Trans-1-ethyl-2-methylcyclopentane	1.06	1.03	1.03
1-Ethyl-1-methylcyclopentane	0.21	0.20	0.20
Trans-1,2,dimethylcyclohexane	3.36	3.25	3.28
Trans-1,3,dimethylcyclohexane	0.05	0.05	0.05
N-Octane	3.36	3.59	3.22
Isopropylcyclopentane	0.37	0.36	0.36
2,4,4-Trimethylhexane	0.03	0.03	0.03
2,3,5-Trimethylhexane	0.17	0.18	0.15
Cis-1-ethyl-2-methylcyclopentane	0.16	0.15	0.16
2,2-Dimethylheptane	0.28	0.30	0.24
Cis-1,2-dimethylcyclohexane	0.67	0.63	0.65
2,4-Dimethylheptane	1.06	1.11	0.90
4,4-Dimethylheptane	0.12	0.13	0.10
Ethylcyclohexane	4.87	4.64	4.74
Cis,cis,1-3-5,trimethylcyclohexane	0.14	0.14	0.12
2,6-Dimethylheptane	0.89	0.94	0.76
1,1,3-Trimethylcyclohexane	2.97	2.86	2.57
C9 Naphthenes	3.04	2.92	2.63
2,5-Dimethylheptane	1.11	1.16	0.95
3,5-Dimethylheptane	0.28	0.29	0.24
Ethylbenzene	1.12	0.97	1.15
Trans,trans,1,2,4-trimethylcyclohexane	1.60	1.56	1.39
Cis,trans,1,3,5-trimethylcyclohexane	0.10	0.10	0.09
Meta-Xylene	1.68	1.46	1.73
Para-Xylene	0.77	0.67	0.79
2,3-Dimethylheptane	1.71	1.77	1.46
3,4-Dimethylheptane D/L	0.12	0.12	0.10
3,4-Dimethylheptane L/D	0.73	0.75	0.62
4-Methyloctane	0.49	0.51	0.42
2-Methyloctane	0.54	0.57	0.46
Cis,cis,1,2,3,trimethylcyclohexane	0.26	0.25	0.23
3-Ethylheptane	0.60	0.63	0.51
3-Methyloctane	0.68	0.71	0.58
Cis,trans,1,2,4,trimethylcyclohexane	0.11	0.10	0.10

Core Lab
PETROLEUM SERVICES

8210 Mosley Rd.
Houston, TX 77075
713-943-9776 Telephone
713-943-3846 Facsimile

CORE LABORATORIES

Mancos 200-300 **ASTM D-6623** **131169-3**

Component Name	WT %	LV %	Mol %
Ortho-Xylene	1.45	1.24	1.49
Trans-1-Methyl-2-propylcyclopentane	0.09	0.08	0.08
Cis-1-ethyl-3-methylcyclohexane	0.38	0.36	0.33
Trans-1-ethyl-4-methylcyclohexane	1.07	1.01	0.93
Isobutylcyclopentane	0.83	0.80	0.72
2,2,6-Trimethylheptane	0.02	0.02	0.02
1-Ethyl-1-methylcyclohexane	0.08	0.08	0.07
Cis,trans,1,2,3,trimethylcyclohexane	0.09	0.09	0.08
Trans,trans,1,2,3,trimethylcyclohexane	0.11	0.10	0.10
N-Nonane	0.41	0.43	0.35
Trans-1-ethyl-3-methylcyclohexane	0.53	0.51	0.46
Trans-1-ethyl-2-methylcyclohexane	0.14	0.13	0.12
Cis-1-ethyl-4-methylcyclohexane	0.01	0.01	0.01
Isopropylbenzene	0.14	0.12	0.13
2,2-Dimethyloctane	0.64	0.66	0.49
Isopropylcyclohexane	0.15	0.14	0.13
Cis-1-ethyl-2-methylcyclohexane	0.08	0.08	0.07
2,4-Dimethyloctane	0.26	0.27	0.20
2,6-Dimethyloctane	0.26	0.27	0.20
2,5-Dimethyloctane	0.09	0.09	0.07
N-propylcyclohexane	0.51	0.48	0.44
N-butylcyclopentane	0.09	0.09	0.08
2,7-Dimethyloctane	0.05	0.05	0.04
n-Propylbenzene	0.23	0.20	0.21
3,6-Dimethyloctane	0.12	0.12	0.09
1-Methyl-3-ethylbenzene	0.12	0.10	0.11
1-Methyl-4-ethylbenzene	0.05	0.04	0.05
2,3-Dimethyloctane	0.05	0.05	0.04
1,3,5-Trimethylbenzene	0.16	0.14	0.15
5-Methylnonane	0.02	0.02	0.02
4-Methylnonane	0.03	0.03	0.02
1-Methyl-2-ethylbenzene	0.06	0.05	0.05
2-Methylnonane	0.03	0.03	0.02
3-Ethyloctane	0.02	0.02	0.02
1,2,3,5 Tet-methylcyclohexane	0.01	0.01	0.01
3-Methylnonane	0.05	0.05	0.04
1,2,3,4 Tet-methylcyclohexane	0.02	0.02	0.02
C10 Naphthenes	0.09	0.09	0.07
C10 Paraffin	0.02	0.02	0.01
1,2,4-Trimethylbenzene	0.10	0.09	0.09
Cis-1-methyl-3-propylcyclohexane	0.04	0.04	0.03
Trans 1,4 diethylcyclohexane	0.04	0.04	0.03
Trans-1-methyl-3-propylcyclohexane	0.01	0.01	0.01

8210 Mosley Rd.
Houston, TX 77075
713-943-9776 Telephone
713-943-3846 Facsimile

CORE LABORATORIES

Mancos 200-300 **ASTM D-6623** **131169-3**

Component Name	WT %	LV %	Mol %
1-Ethyl-2,3-dimethylcyclohexane	0.01	0.01	0.01
Isobutylbenzene	0.01	0.01	0.01
Cis-1-methyl-4-propylcyclohexane	0.01	0.01	0.01
sec-Butylbenzene	0.01	0.01	0.01
N-Decane	0.02	0.02	0.02
1,2,3-Trimethylbenzene	0.02	0.02	0.02
1-Methyl-3-isopropylbenzene	0.01	0.01	0.01
Sec-butylcyclohexane	0.01	0.01	0.01
Butylcyclohexane	0.01	0.01	0.01
1-Methyl-3-n-propylbenzene	0.01	0.01	0.01
4-Methyldecane	0.01	0.01	0.01
4-Methylundecane	0.01	0.01	0.01
Tetradecanes	0.02	0.02	0.01
Hexadecanes	0.01	0.01	0.00
Heptadecanes	0.01	0.01	0.00
Octadecanes	0.01	0.01	0.00
Eicosanes	0.01	0.01	0.00
Heneicosanes	0.01	0.01	0.00
Docosanes	0.01	0.01	0.00
Unidentified	0.00	0.00	0.00
	100.00	100.00	100.00

Mol WT of Sample	109.42
Mol WT C6 Plus	110.40
Density of Sample	0.7554
Density C6 Plus	0.7578

Summary by Group

Totals

Group	%Wt	% Vol
Paraffin	7.34	8.07
Isoparaf.	26.89	28.62
Olefin	0.00	0.00
Naphthene	57.47	56.08
Aromatic	8.14	7.04
Oxygenates		
Unidentified	0.16	0.19
	100.00	100.00

8210 Mosley Rd.
Houston, TX 77075
713-943-9776 Telephone
713-943-3846 Facsimile

CORE LABORATORIES

Mancos 200-300 **ASTM D-6623** **131169-3**

Summary by Carbon

Totals	Group	%Wt	% Vol
	C4	0.40	0.52
	C5	0.92	1.09
	C6	3.91	4.02
	C7	23.25	23.39
	C8	46.66	46.24
	C9	22.72	22.53
	C10	1.97	2.01
	C11	0.01	0.01

Composite by Carbon

Group	C#	%Wt	% Vol
Paraffin	C4	0.33	0.43
	C5	0.39	0.47
	C6	0.55	0.63
	C7	2.28	2.60
	C8	3.36	3.59
	C9	0.41	0.43
	C10	0.02	0.02
	C11	0.00	0.00
Isoparaf.	C4	0.07	0.09
	C5	0.42	0.51
	C6	0.79	0.89
	C7	4.39	4.79
	C8	10.50	11.18
	C9	9.05	9.45
	C10	1.66	1.70
	C11	0.01	0.01
Olefin	C4	0.00	0.00
	C5	0.00	0.00
	C6	0.00	0.00
	C7	0.00	0.00
	C8	0.00	0.00
	C9	0.00	0.00
	C10	0.00	0.00
	C11		

8210 Mosley Rd.
Houston, TX 77075
713-943-9776 Telephone
713-943-3846 Facsimile

CORE LABORATORIES

Mancos 200-300 **ASTM D-6623** **131169-3**

Naphthene	C4		
	C5	0.11	0.11
	C6	2.43	2.38
	C7	14.52	14.32
	C8	27.78	27.13
	C9	12.38	11.89
	C10	0.25	0.25
	C11	0.00	0.00
Aromatic	C4		
	C5		
	C6	0.14	0.12
	C7	2.06	1.78
	C8	5.02	4.34
	C9	0.88	0.76
	C10	0.04	0.04
	C11	0.00	0.00

The analytical results , opinions or interpretations contained in this report are based upon information and material supplied by the client for whose exclusive and confidential use this report has been made. The analytical results, opinions, or interpretations expressed represent the best judgement of Core Laboratories. Core Laboratories, however, makes no warranty or representation, expressed or implied, of any type, and expressly disclaims same as to the productivity, proper operations or profitableness of any oil, gas, coal, or other mineral property, well or sand in connection with such report is used or relied upon for any reason whatsoever. The report shall not be reproduced, in whole or in part, without the written approval of Core Laboratories.

Core Lab
PETROLEUM SERVICES

8210 Mosley Rd.
Houston, TX 77075
713 943-9776 Telephone
713 943-3846 Facsimile

CORE LABORATORIES

#12

JOHN I FALKNER
FALKNER-RED RIVER LABS

1039 PEARL DRIVE
BOSSIER CITY, LA 71111

Sample Number: 131169-004
Sample Date:
Date Reported: 3/26/03
Date Received: 3/18/03
Sample ID: Mancos 300-350
Description:

Analytical Report

Test	Result	Units	Method	Date	Analyst
Capillary Gas Chromatography	Attached		ASTM D-5134 Mod	3/18/03	PKT
Naphthalenes in Jet Fuel	0.03	WT %	ASTM D-1840	3/20/03	KC
Nitrogen Total by Chemilum.	<1	ppm wt	ASTM D-4629	3/20/03	JT

Approved By: JWaits
Jean Waits
Supervising Chemist

The analytical results, opinions or interpretations contained in this report are based upon information and material supplied by the client for whose exclusive and confidential use this report has been made. The analytical results, opinions or interpretations expressed represent the best judgment of Core Laboratories. Core Laboratories, however, makes no warranty or representation, express or implied, of any type, and expressly disclaims same as to the productivity, proper operations or profitableness of any oil, gas, coal, or other mineral property, well or sand in connection with which such report is used or relied upon for any reason whatsoever. This report also not be reproduced, in whole or in part, without the written approval of Core Laboratories.

Core Lab
PETROLEUM SERVICES

8210 Mosley Rd.
Houston, TX 77075
713-943-9776 Telephone
713-943-3846 Facsimile

CORE LABORATORIES

Mancos 300-350 **ASTM D-6623** **131169-4**

Component Name	WT %	LV %	Mol %
Propane	0.02	0.03	0.06
Isobutane	0.02	0.03	0.05
N-Butane	0.07	0.09	0.16
Isopentane	0.06	0.08	0.11
N-Pentane	0.05	0.06	0.09
Cyclopentane	0.01	0.01	0.02
2-Methylpentane	0.02	0.02	0.03
3-Methylpentane	0.02	0.02	0.03
N-Hexane	0.03	0.04	0.05
Methylcyclopentane	0.04	0.04	0.06
2,4-Dimethylpentane	0.01	0.01	0.01
Benzene	0.01	0.01	0.02
Cyclohexane	0.05	0.05	0.08
2-Methylhexane	0.03	0.03	0.04
2,3-Dimethylpentane	0.03	0.03	0.04
1,1-Dimethylcyclopentane	0.02	0.02	0.03
3-Methylhexane	0.06	0.07	0.08
Cis-1,3-dimethylcyclopentane	0.05	0.05	0.07
Trans-1,3-dimethylcyclopentane	0.04	0.04	0.05
3-Ethylpentane	0.01	0.01	0.01
Trans-1,2-dimethylcyclopentane	0.06	0.06	0.08
2,2,4-Trimethylpentane	0.03	0.03	0.03
N-Heptane	0.06	0.07	0.08
Methylcyclohexane	0.22	0.22	0.29
1,1,3-Trimethylcyclopentane	0.05	0.05	0.06
Ethylcyclopentane	0.02	0.02	0.03
2,5-Dimethylhexane	0.02	0.02	0.02
2,4-Dimethylhexane	0.02	0.02	0.02
Trans,cis-1,2,4-trimethylcyclopentane	0.05	0.05	0.06
Trans,cis-1,2,3-trimethylcyclopentane	0.05	0.05	0.06
2,3,4-Trimethylpentane	0.02	0.02	0.02
Toluene	0.02	0.02	0.03
2,3-Dimethylhexane	0.03	0.03	0.03
2-Methylheptane	0.04	0.04	0.05
4-Methylheptane	0.01	0.01	0.01
Cis-1,3 dimethylcyclohexane	0.14	0.14	0.16
3-Methylheptane	0.03	0.03	0.03
Trans-1,4-dimethylcyclohexane	0.06	0.06	0.07
1,1-Dimethylcyclohexane	0.02	0.02	0.02
2,2,5-Trimethylhexane	0.02	0.02	0.02
Cis-1-ethyl-3-methylcyclopentane	0.01	0.01	0.01
Trans-1-ethyl-2-methylcyclopentane	0.02	0.02	0.02
Trans-1,2,dimethylcyclohexane	0.08	0.08	0.09

8210 Mosley Rd.
Houston, TX 77075
713-943-9776 Telephone
713-943-3846 Facsimile

CORE LABORATORIES

Mancos 300-350 **ASTM D-6623** **131169-4**

Component Name	WT %	LV %	Mol %
C8 Naphthenes	3.00	2.99	3.51
N-Octane	0.08	0.09	0.09
Isopropylcyclopentane	0.01	0.01	0.01
2,3,5-Trimethylhexane	0.01	0.01	0.01
Cis-1-ethyl-2-methylcyclopentane	0.01	0.01	0.01
2,2-Dimethylheptane	0.01	0.01	0.01
Cis-1,2-dimethylcyclohexane	0.04	0.04	0.05
2,4-Dimethylheptane	0.08	0.09	0.08
4,4-Dimethylheptane	0.01	0.01	0.01
Ethylcyclohexane	0.45	0.44	0.53
Cis,cis,1-3-5,trimethylcyclohexane	0.02	0.02	0.02
2,6-Dimethylheptane	0.08	0.09	0.08
1,1,3-Trimethylcyclohexane	0.77	0.77	0.80
C9 Naphthenes	9.41	9.37	9.78
2,5-Dimethylheptane	0.13	0.14	0.13
3,5-Dimethylheptane	0.04	0.04	0.04
Ethylbenzene	0.05	0.04	0.06
Trans,trans,1,2,4-trimethylcyclohexane	1.13	1.14	1.18
Cis,trans,1,3,5-trimethylcyclohexane	0.06	0.06	0.06
Meta-Xylene	0.25	0.23	0.31
Para-Xylene	0.10	0.09	0.12
2,3-Dimethylheptane	0.72	0.77	0.74
3,4-Dimethylheptane D/L	0.06	0.06	0.06
3,4-Dimethylheptane L/D	0.25	0.27	0.26
4-Ethylheptane	0.04	0.04	0.04
C9 Paraffins	1.63	1.69	1.67
4-Methyloctane	0.30	0.32	0.31
2-Methyloctane	0.38	0.41	0.39
Cis,cis,1,2,3,trimethylcyclohexane	0.23	0.23	0.24
3-Ethylheptane	0.79	0.86	0.81
3-Methyloctane	0.70	0.76	0.72
Cis,trans,1,2,4,trimethylcyclohexane	0.18	0.18	0.19
Ortho-Xylene	0.51	0.45	0.63
Trans-1-Methyl-2-propylcyclopentane	0.17	0.17	0.18
Cis-1-ethyl-3-methylcyclohexane	0.76	0.74	0.79
Trans-1-ethyl-4-methylcyclohexane	2.76	2.69	2.87
Isobutylcyclopentane	2.17	2.16	2.26
1-Ethyl-1-methylcyclohexane	0.20	0.20	0.21
Cis,trans,1,2,3,trimethylcyclohexane	0.32	0.32	0.33
Trans,trans,1,2,3,trimethylcyclohexane	0.42	0.41	0.44
N-Nonane	1.51	1.64	1.55
Trans-1-ethyl-3-methylcyclohexane	2.75	2.73	2.86
Trans-1-ethyl-2-methylcyclohexane	0.72	0.72	0.75

Core Lab
PETROLEUM SERVICES

8210 Mosley Rd.
Houston, TX 77075
713-943-9776 Telephone
713-943-3846 Facsimile

CORE LABORATORIES

Mancos 300-350 **ASTM D-6623** **131169-4**

Component Name	WT %	LV %	Mol %
Cis-1-ethyl-4-methylcyclohexane	0.04	0.04	0.04
Isopropylbenzene	0.33	0.30	0.36
Isopropylcyclohexane	1.13	1.10	1.18
Cis-1-ethyl-2-methylcyclohexane	0.57	0.57	0.59
2,4-Dimethyloctane	1.97	2.13	1.82
2,6-Dimethyloctane	3.69	3.95	3.41
2,5-Dimethyloctane	0.91	0.98	0.84
N-propylcyclohexane	4.58	4.49	4.77
N-butylcyclopentane	0.92	0.91	0.96
2,7-Dimethyloctane	0.53	0.58	0.49
n-Propylbenzene	0.72	0.65	0.79
3,6-Dimethyloctane	1.89	2.00	1.75
1-Methyl-3-ethylbenzene	1.26	1.13	1.38
1-Methyl-4-ethylbenzene	0.67	0.61	0.73
3,4-Dimethyloctane	0.10	0.11	0.09
2,3-Dimethyloctane	1.87	1.97	1.73
1,3,5-Trimethylbenzene	1.22	1.10	1.33
4-Ethyloctane	0.54	0.58	0.50
5-Methylnonane	0.61	0.65	0.56
4-Methylnonane	0.85	0.90	0.79
1-Methyl-2-ethylbenzene	0.79	0.70	0.86
2-Methylnonane	1.93	2.07	1.78
3-Ethyloctane	1.07	1.14	0.99
1,2,3,5 Tet-methylcyclohexane	0.49	0.49	0.46
3-Methylnonane	2.41	2.56	2.23
1,2,3,4 Tet-methylcyclohexane	1.10	1.09	1.03
C10 Naphthenes	6.87	6.80	6.44
C10 Paraffin	2.24	2.34	1.89
1,2,4-Trimethylbenzene	3.36	2.99	3.67
Cis-1-methyl-3-propylcyclohexane	2.08	2.04	1.93
Cis 1,3 diethylcyclohexane	0.59	0.58	0.55
Trans 1,4 diethylcyclohexane	1.64	1.62	1.54
Trans-1-methyl-3-propylcyclohexane	0.43	0.43	0.40
1-Ethyl-2,3-dimethylcyclohexane	0.45	0.45	0.42
Isobutylbenzene	0.14	0.13	0.14
Cis-1-methyl-4-propylcyclohexane	0.59	0.58	0.55
sec-Butylbenzene	0.67	0.61	0.66
N-Decane	1.54	1.64	1.42
1,2,3,4 Tet-methylcyclohexane	0.51	0.51	0.48
Trans 1,3 diethylcyclohexane	0.31	0.31	0.29
1,2,3-Trimethylbenzene	1.15	1.00	1.26
Trans 1,2 diethylcyclohexane	0.33	0.33	0.31
1-Methyl-3-isopropylbenzene	0.13	0.12	0.13

Core Lab
PETROLEUM SERVICES

8210 Mosley Rd.
Houston, TX 77075
713-943-9776 Telephone
713-943-3846 Facsimile

CORE LABORATORIES

Mancos 300-350 **ASTM D-6623** **131169-4**

Component Name	WT %	LV %	Mol %
Cis 1,4 diethylcyclohexane	0.24	0.24	0.22
1-Methyl-4-isopropylbenzene	0.18	0.16	0.18
Indan (2,3-Dihydroindene)	0.17	0.14	0.19
Sec-butylcyclohexane	1.73	1.71	1.62
1-Methyl-2-isopropylbenzene	0.20	0.18	0.20
Butylcyclohexane	1.10	1.07	1.03
1,3-Diethylbenzene	0.34	0.31	0.33
C11 Naphthenes	0.75	0.73	0.64
1-Methyl-3-n-propylbenzene	0.28	0.25	0.27
1-Methyl-4-n-propylbenzene	0.28	0.25	0.27
1,3-Dimethyl-5-ethylbenzene	0.17	0.15	0.17
1,2-Diethylbenzene	0.04	0.04	0.04
1-Methyl-2-n-propylbenzene	0.15	0.13	0.15
Cis 1-methyl 4-ter-butylcyclohexane	0.23	0.22	0.20
4-Methyldecane	0.49	0.51	0.41
5-Methyldecane	0.20	0.21	0.17
1,4-Dimethyl-2-ethylbenzene	0.11	0.10	0.11
1,3-Dimethyl-4-ethylbenzene	0.11	0.10	0.11
3-Methyldecane	0.20	0.21	0.17
C11 Paraffins	0.40	0.42	0.34
1,2-Dimethyl-4-ethylbenzene	0.13	0.12	0.13
1,3-Dimethyl-2-ethylbenzene	0.02	0.02	0.02
Tricyclodecane	0.21	0.20	0.20
1-Methylindan	0.01	0.01	0.01
1,2-Dimethyl-3-Ethylbenzene	0.03	0.03	0.03
N-Undecane	0.23	0.24	0.19
1,2,4,5-Tetramethylbenzene	0.05	0.04	0.05
1,2,3,5-Tetramethylbenzene	0.07	0.06	0.07
C11 Unidentified	0.42	0.41	0.34
4-Methylindan	0.07	0.06	0.07
5-Methylindan	0.04	0.03	0.04
1,2,3,4-Tetramethylbenzene	0.05	0.04	0.05
Tetralin	0.02	0.02	0.02
6-Methylundecane	0.04	0.04	0.03
5-Methylundecane	0.01	0.01	0.01
4-Methylundecane	0.02	0.02	0.02
Naphthalene	0.01	0.01	0.01
3-Methylundecane	0.01	0.01	0.01
C11 Aromatic	0.29	0.26	0.26
N-Dodecane	0.02	0.02	0.02
Dodecanes	0.44	0.40	0.36
2-Methylnaphthalene	0.01	0.01	0.01
Tridecanes	0.07	0.07	0.05

8210 Mosley Rd.
Houston, TX 77075
713-943-9776 Telephone
713-943-3846 Facsimile

CORE LABORATORIES

Mancos 300-360 | ASTM D-6623 | 131169-4

Component Name	WT %	LV %	Mol %
N-Tridecane	0.01	0.01	0.01
Tetradecanes	0.03	0.03	0.02
Pentadecanes	0.01	0.01	0.01
Hexadecanes	0.01	0.01	0.01
Heptadecanes	0.01	0.01	0.01
Octadecanes	0.01	0.01	0.01
Eicosanes	0.01	0.01	0.00
Heneicosanes	0.01	0.01	0.00
Docosanes	0.01	0.01	0.00
Tetracosanes	0.01	0.01	0.00
Unidentified	0.00	0.00	0.00
	100.00	100.00	100.00

Mol WT of Sample	131.43
Mol WT C6 Plus	131.76
Density of Sample	0.7827
Density C6 Plus	0.7832

Summary by Group

Totals

Group	%Wt	% Vol
Paraffin	3.57	3.87
Isoparaf.	27.65	29.44
Olefin	0.00	0.00
Naphthene	53.44	52.90
Aromatic	14.21	12.70
Oxygenates		
* Unidentified	1.13	1.09

Summary by Carbon

Totals

Group	%Wt	% Vol
C4	0.09	0.12
C5	0.12	0.15
C6	0.17	0.18
C7	0.63	0.65
C8	5.18	5.07
C9	45.74	44.87
C10	44.10	45.02
C11	2.84	2.85

8210 Mosley Rd.
Houston, TX 77075
713-943-9776 Telephone
713-943-3846 Facsimile

CORE LABORATORIES

Ivan:05/300-350 **ASTM D-6823** **131169-4**

Composite by Carbon

Group	C#	%Wt	% Vol
Paraffin	C4	0.07	0.09
	C5	0.05	0.06
	C6	0.03	0.04
	C7	0.06	0.07
	C8	0.08	0.09
	C9	1.51	1.64
	C10	1.54	1.64
	C11	0.23	0.24
Isoparaf.	C4	0.02	0.03
	C5	0.06	0.08
	C6	0.04	0.04
	C7	0.14	0.15
	C8	0.20	0.20
	C9	5.25	5.59
	C10	20.61	21.96
	C11	1.33	1.39
Olefin	C4	0.00	0.00
	C5	0.00	0.00
	C6	0.00	0.00
	C7	0.00	0.00
	C8	0.00	0.00
	C9	0.00	0.00
	C10	0.00	0.00
	C11		
Naphthene	C4		
	C5	0.01	0.01
	C6	0.09	0.09
	C7	0.41	0.41
	C8	3.99	3.97
	C9	29.31	29.02
	C10	18.65	18.45
	C11	0.98	0.95

Core Lab
PETROLEUM SERVICES

8210 Mosley Rd.
Houston, TX 77075
713-943-9776 Telephone
713-943-3846 Facsimile

CORE LABORATORIES

Mancos 300-350 **ASTM D-6623** **131169-4**

Aromatic	C4		
	C5		
	C6	0.01	0.01
	C7	0.02	0 02
	C8	0.91	0 81
	C9	9.67	8 62
	C10	3.30	2 97
	C11	0.30	0.27

The analytical results , opinions or interpretations contained in this report are based upon information and material supplied by the client for whose exclusive and confidential use this report has been made. The analytical results, opinions, or interpretations expressed represent the best judgement of Core Laboratories. Core Laboratories, however, makes no warranty or representation, expressed or implied, of any type, and expressly disclaims same as to the productivity, proper operations or profitableness of any oil, gas, coal, or other mineral property, well or sand in connection with such report is used or relied upon for any reason whatsoever. The report shall not be reproduced, in whole or in part, without the written approval of Core Laboratories.

8210 Mosley Rd.
Houston, TX 77075
713-943-9776 Telephone
713-943-3846 Facsimile

CORE LABORATORIES

Sample # 12 (350-500) **ASTM D-6623** **131514-5**

Component Name	WT %	LV %	Mol %
Propane	0.01	0.02	0.04
N-Butane	0.01	0.01	0.03
Isopentane	0.01	0.01	0.02
N-Pentane	0.01	0.01	0.02
Cis-2-pentene	0.01	0.01	0.02
2-Methylpentane	0.01	0.01	0.02
N-Hexane	0.01	0.01	0.02
N-Heptane	0.01	0.01	0.02
Methylcyclohexane	0.01	0.01	0.02
2-Methylheptane	0.01	0.01	0.01
N-Octane	0.01	0.01	0.01
Ethylcyclohexane	0.01	0.01	0.02
1,1,3-Trimethylcyclohexane	0.01	0.01	0.01
Trans,trans,1,2,4-trimethylcyclohexane	0.01	0.01	0.01
2,3-Dimethylheptane	0.01	0.01	0.01
3-Methyloctane	0.01	0.01	0.01
Trans-1-ethyl-4-methylcyclohexane	0.02	0.02	0.03
Isobutylcyclopentane	0.01	0.01	0.01
N-Nonane	0.01	0.01	0.01
Trans-1-ethyl-3-methylcyclohexane	0.02	0.02	0.03
2,2-Dimethyloctane	0.01	0.01	0.01
Isopropylcyclohexane	0.02	0.02	0.03
2,4-Dimethyloctane	0.01	0.01	0.01
2,6-Dimethyloctane	0.04	0.05	0.05
2,5-Dimethyloctane	0.01	0.01	0.01
N-propylcyclohexane	0.03	0.03	0.04
N-butylcyclopentane	0.01	0.01	0.01
2,7-Dimethyloctane	0.01	0.01	0.01
n-Propylbenzene	0.03	0.03	0.04
3,6-Dimethyloctane	0.02	0.02	0.02
1-Methyl-3-ethylbenzene	0.01	0.01	0.01
1-Methyl-4-ethylbenzene	0.04	0.04	0.06
2,3-Dimethyloctane	0.13	0.14	0.16
1,3,5-Trimethylbenzene	0.05	0.05	0.07
5-Methylnonane	0.02	0.02	0.02
4-Methylnonane	0.02	0.02	0.02
1-Methyl-2-ethylbenzene	0.08	0.07	0.11
2-Methylnonane	0.01	0.01	0.01
3-Ethyloctane	0.06	0.07	0.07
1,2,3,5 Tet-methylcyclohexane	0.04	0.04	0.05
3-Methylnonane	0.15	0.17	0.18
1-methyl-trans-4-isopropylcyclohexane	0.02	0.02	0.02
1,2,3,4 Tet-methylcyclohexane	0.13	0.14	0.16

8210 Mosley Rd.
Houston, TX 77075
713-943-9776 Telephone
713-943-3846 Facsimile

CORE LABORATORIES

Sample # 12 (350-500) **ASTM D-6623** **131514-5**

Component Name	WT %	LV %	Mol %
C10 Naphthenes	0.23	0.24	0.28
C10 Paraffin	0.06	0.07	0.07
1,2,4-Trimethylbenzene	0.26	0.24	0.37
Cis-1-methyl-3-propylcyclohexane	0.28	0.29	0.34
Trans 1,4 diethylcyclohexane	0.31	0.32	0.38
Trans-1-methyl-3-propylcyclohexane	0.06	0.06	0.07
1-Ethyl-2,3-dimethylcyclohexane	0.08	0.08	0.10
Isobutylbenzene	0.20	0.19	0.25
Cis-1-methyl-4-propylcyclohexane	0.11	0.11	0.13
sec-Butylbenzene	0.13	0.12	0.17
N-Decane	0.34	0.38	0.41
1,2,3,4 Tet-methylcyclohexane	0.14	0.15	0.17
Trans 1,3 diethylcyclohexane	0.11	0.11	0.13
1,2,3-Trimethylbenzene	0.28	0.26	0.40
Trans 1,2 diethylcyclohexane	0.15	0.16	0.18
1-Methyl-3-isopropylbenzene	0.09	0.09	0.11
Cis 1,4 diethylcyclohexane	0.09	0.09	0.11
1-Methyl-4-isopropylbenzene	0.16	0.15	0.20
Indan (2,3-Dihydroindene)	0.24	0.20	0.35
Sec-butylcyclohexane	0.93	0.97	1.13
Butylcyclohexane	0.91	0.93	1.11
1,3-Diethylbenzene	0.34	0.32	0.43
C11 Naphthenes	0.78	0.80	0.86
1-Methyl-3-n-propylbenzene	0.39	0.37	0.50
1-Methyl-4-n-propylbenzene	0.13	0.12	0.17
1,4-Diethylbenzene	0.21	0.20	0.27
1,3-Dimethyl-5-ethylbenzene	0.35	0.33	0.44
1,2-Diethylbenzene	0.28	0.26	0.36
1-Methyl-2-n-propylbenzene	0.29	0.27	0.37
Cis 1-methyl 4-ter-butylcyclohexane	0.35	0.36	0.39
C11 Paraffins	0.41	0.45	0.45
4-Methyldecane	0.85	0.93	0.93
5-Methyldecane	0.31	0.34	0.34
1,4-Dimethyl-2-ethylbenzene	0.66	0.62	0.84
1,3-Dimethyl-4-ethylbenzene	0.57	0.53	0.72
3-Methyldecane	0.42	0.47	0.46
1,2-Dimethyl-4-ethylbenzene	0.46	0.43	0.58
1,3-Dimethyl-2-ethylbenzene	0.18	0.17	0.23
Tricyclodecane	0.74	0.76	0.93
1-Methylindan	0.40	0.35	0.52
1,2-Dimethyl-3-Ethylbenzene	0.53	0.49	0.67
N-Undecane	0.97	1.07	1.06
1,2,4,5-Tetramethylbenzene	0.29	0.27	0.37

8210 Mosley Rd.
Houston, TX 77075
713-943-9776 Telephone
713-943-3846 Facsimile

CORE LABORATORIES

Sample # 12 (350-500) **ASTM D-6623** **131514-5**

Component Name	WT %	LV %	Mol %
1,2,3,5-Tetramethylbenzene	0.43	0.40	0.55
C11 Unidentified	2.54	2.62	2.69
5-Methylindan	0.51	0.44	0.66
1,2,3,4-Tetramethylbenzene	0.65	0.59	0.83
Tetralin	0.03	0.03	0.04
6-Methylundecane	0.85	0.93	0.85
5-Methylundecane	0.29	0.32	0.29
4-Methylundecane	0.45	0.49	0.45
Pentylbenzene	0.17	0.16	0.20
Naphthalene	0.50	0.41	0.67
3-Methylundecane	0.38	0.42	0.38
C11 Aromatic	9.45	8.96	10.87
N-Dodecane	0.97	1.06	0.97
Dodecanes	8.38	7.98	8.81
Tridecanes	16.89	17.19	16.46
N-Tridecane	1.88	2.04	1.74
Tetradecanes	19.30	19.38	17.33
N-Tetradecane	2.44	2.62	2.10
Pentadecanes	11.60	11.51	9.60
N-Pentadecane	1.50	1.60	1.20
Hexadecanes	3.22	3.16	2.47
N-Hexadecane	0.24	0.26	0.18
Heptadecanes	0.81	0.79	0.58
N-Heptadecane	0.14	0.15	0.10
Octadecanes	0.09	0.09	0.06
N-Octadecane	0.02	0.02	0.01
Nonadecanes	0.03	0.03	0.02
	100.00	100.00	100.00

Mol WT of Sample	170.52
Mol WT C6 Plus	170.65
Density of Sample	0.8244
Density C6 Plus	0.8246

RON	1.7
MON	1.4

8210 Mosley Rd.
Houston, TX 77075
713-943-9776 Telephone
713-943-3846 Facsimile

CORE LABORATORIES

Sample # 12 (350-500) **ASTM D-6623** **131514-5**

Summary by Group

Totals

Group	%Wt	% Vol
Paraffin	1.37	1.51
Isoparaf.	3.44	3.78
Olefin	0.01	0.01
Naphthene	5.61	5.78
Aromatic	18.39	17.17
Oxygenates		
* Unidentified	71.18	71.75

Summary by Carbon

Totals

Group	%Wt	% Vol
C4	0.01	0.01
C5	0.03	0.03
C6	0.02	0.02
C7	0.02	0.02
C8	0.03	0.03
C9	1.15	1.06
C10	13.00	12.61
C11	14.56	14.47

Composite by Carbon

Group	C#	%Wt	% Vol
Paraffin	C4	0.01	0.01
	C5	0.01	0.01
	C6	0.01	0.01
	C7	0.01	0.01
	C8	0.01	0.01
	C9	0.01	0.01
	C10	0.34	0.38
	C11	0.97	1.07
Isoparaf.	C4	0.00	0.00
	C5	0.01	0.01
	C6	0.01	0.01
	C7	0.00	0.00
	C8	0.01	0.01
	C9	0.02	0.02
	C10	0.55	0.61
	C11	2.84	3.12

8210 Mosley Rd.
Houston, TX 77075
713-943-9776 Telephone
713-943-3846 Facsimile

CORE LABORATORIES

Sample # 12 (350-500) **ASTM D-6623** **131514-5**

Olefin	C4	0.00	0.00
	C5	0.01	0.01
	C6	0.00	0.00
	C7	0.00	0.00
	C8	0.00	0.00
	C9	0.00	0.00
	C10	0.00	0.00
	C11		
Naphthene	C4		
	C5	0.00	0.00
	C6	0.00	0.00
	C7	0.01	0.01
	C8	0.01	0.01
	C9	0.13	0.13
	C10	4.33	4.47
	C11	1.13	1.16
Aromatic	C4		
	C5		
	C6	0.00	0.00
	C7	0.00	0.00
	C8	0.00	0.00
	C9	0.99	0.90
	C10	7.78	7.15
	C11	9.62	9.12

The analytical results , opinions or interpretations contained in this report are based upon information and material supplied by the client for whose exclusive and confidential use this report has been made. The analytical results, opinions, or interpretations expressed represent the best judgement of Core Laboratories. Core Laboratories, however, makes no warranty or representation, expressed or implied, of any type, and expressly disclaims same as to the productivity, proper operations or profitableness of any oil, gas, coal, or other mineral property, or sand in connection with such report is used or relied upon for any reason whatsoever. The report shall not be reproduced, in whole part, without the written approval of Core Laboratories.

8210 Mosley Rd.
Houston, TX 77075
713-943-9776 Telephone
713-943-3846 Facsimile

CORE LABORATORIES

Sample # 12 (500-650) **ASTM D-6623** **131514-6**

Component Name	WT %	LV %	Mol %
Ethane	0.05	0.11	0.32
Propane	0.29	0.47	1.28
Isobutane	0.04	0.06	0.13
Isobutylene	0.27	0.37	0.94
N-Butane	0.36	0.50	1.20
Trans-2-butene	0.04	0.05	0.14
Cis-2-butene	0.03	0.04	0.10
3-Methyl-1-butene	0.05	0.06	0.14
Isopentane	0.21	0.28	0.57
1-Pentene	0.21	0.27	0.58
2-Methyl-1-butene	0.13	0.16	0.36
N-Pentane	0.45	0.58	1.21
2-methyl-1,3-butadiene	0.01	0.01	0.03
Trans-2-pentene	0.05	0.06	0.14
3,3-dimethyl-1-butene	0.03	0.04	0.07
Cis-2-pentene	0.01	0.01	0.03
2-Methyl-2-butene	0.10	0.12	0.28
Trans-1,3-pentadiene	0.01	0.01	0.03
Cis-1,3-pentadiene	0.01	0.01	0.03
Cyclopentene	0.04	0.04	0.11
4-Methyl-1-pentene	0.13	0.16	0.30
3-Methyl-1-pentene	0.04	0.05	0.09
Cyclopentane	0.06	0.07	0.17
2,3-Dimethylbutane	0.05	0.06	0.11
2-Methylpentane	0.21	0.26	0.47
3-Methylpentane	0.10	0.12	0.23
2-Methyl-1-pentene	0.09	0.11	0.21
1-Hexene	0.26	0.31	0.60
N-Hexane	0.41	0.51	0.92
Trans-3-hexene	0.01	0.01	0.02
Trans-2-hexene	0.03	0.04	0.07
2-Methyl-2-pentene	0.06	0.07	0.14
4-Methylcyclopentene	0.04	0.04	0.09
3-Methyl-cis-2-pentene	0.01	0.01	0.02
3-Methylcyclopentene	0.02	0.02	0.05
Cis-2-hexene	0.02	0.02	0.05
3-Methyl-trans-2-pentene	0.03	0.03	0.07
Methylcyclopentane	0.14	0.15	0.32
2,4-Dimethylpentane	0.01	0.01	0.02
2,3-Dimethyl-2-butene	0.01	0.01	0.02
2,3,3-Trimethyl-1-butene	0.01	0.01	0.02
2,2,3-Trimethylbutane	0.01	0.01	0.02
3,4-Dimethyl-1-pentene	0.01	0.01	0.02

8210 Mosley Rd.
Houston, TX 77075
713-943-9776 Telephone
713-943-3846 Facsimile

CORE LABORATORIES

Sample # 12 (500-650) **ASTM D-6623** **131514-6**

Component Name	WT %	LV %	Mol %
4,4-Dimethyl-cis-2-pentene	0.01	0.01	0.02
2,4-Dimethyl-1-pentene	0.04	0.05	0.08
1-Methylcyclopentene	0.13	0.14	0.31
3-Methyl-1-hexene	0.04	0.05	0.08
5-Methyl-1-hexene	0.03	0.04	0.06
Cyclohexane	0.07	0.07	0.16
4-Methyl-1-hexene	0.01	0.01	0.02
4-Methyl-trans-2-hexene	0.11	0.13	0.22
4-Methyl-cis-2-hexene	0.02	0.02	0.04
2-Methylhexane	0.08	0.10	0.16
2,3-Dimethylpentane	0.06	0.07	0.12
1,1-Dimethylcyclopentane	0.01	0.01	0.02
Cyclohexene	0.04	0.04	0.09
3-Methylhexane	0.13	0.15	0.25
5-Methyl-cis-2-hexene	0.01	0.01	0.02
Cis-1,3-dimethylcyclopentane	0.03	0.03	0.06
Trans-1,3-dimethylcyclopentane	0.02	0.02	0.04
3-Ethylpentane	0.07	0.08	0.14
Trans-1,2-dimethylcyclopentane	0.05	0.05	0.10
2,2,4-Trimethylpentane	0.26	0.31	0.44
3-Methyl-cis-3-hexene	0.01	0.01	0.02
Trans-3-heptene	0.06	0.07	0.12
N-Heptane	0.50	0.60	0.97
Cis-3-heptene	0.02	0.02	0.04
3-Methyl-cis-2-hexene	0.01	0.01	0.02
3-Methyl-trans-3-hexene	0.07	0.08	0.14
3-Ethyl-2-pentene	0.06	0.07	0.12
3-Methyl-trans-2-hexene	0.06	0.07	0.12
2,3-dimethyl-2-pentene	0.01	0.01	0.02
Methylcyclohexane	0.18	0.19	0.36
Ethylcyclopentane	0.06	0.06	0.12
2,5-Dimethylhexane	0.07	0.08	0.12
2,4-Dimethylhexane	0.06	0.07	0.10
Trans,cis-1,2,4-trimethylcyclopentane	0.02	0.02	0.03
Trans,cis-1,2,3-trimethylcyclopentane	0.02	0.02	0.03
Toluene	0.07	0.07	0.15
2,3-Dimethylhexane	0.02	0.02	0.03
2-Methyl-3-Ethylpentane	0.02	0.02	0.03
2-Methylheptane	0.30	0.35	0.51
4-Methylheptane	0.06	0.07	0.10
3-Methylheptane	0.12	0.14	0.20
3-Ethylhexane	0.03	0.03	0.05
Trans-1,4-dimethylcyclohexane	0.02	0.02	0.03

8210 Mosley Rd.
Houston, TX 77075
713-943-9776 Telephone
713-943-3846 Facsimile

CORE LABORATORIES

Sample # 12 (500-650) **ASTM D-6623** **131514-6**

Component Name	WT %	LV %	Mol %
1,1-Dimethylcyclohexane	0.01	0.01	0.02
Cis-1-ethyl-3-methylcyclopentane	0.03	0.03	0.05
1-Octene	0.28	0.32	0.48
1-Ethyl-1-methylcyclopentane	0.01	0.01	0.02
Trans-1,2,dimethylcyclohexane	0.07	0.07	0.12
Trans-4-octene	0.02	0.02	0.03
Trans-3-octene	0.03	0.03	0.05
N-Octane	0.47	0.54	0.80
Trans-2-Octene	0.04	0.05	0.07
Cis-2-Octene	0.06	0.07	0.10
Isopropylcyclopentane	0.02	0.02	0.03
2,3,5-Trimethylhexane	0.05	0.06	0.08
Cis-1-ethyl-2-methylcyclopentane	0.05	0.05	0.09
2,2-Dimethylheptane	0.02	0.02	0.03
2-Methyl-4-ethylhexane	0.02	0.02	0.03
Cis-1,2-dimethylcyclohexane	0.01	0.01	0.02
2,4-Dimethylheptane	0.01	0.01	0.02
Ethylcyclohexane	0.13	0.13	0.23
2,6-Dimethylheptane	0.05	0.06	0.08
1,1,3-Trimethylcyclohexane	0.10	0.10	0.15
C9 Naphthenes	0.26	0.27	0.40
2,5-Dimethylheptane	0.05	0.06	0.08
Octenes	0.82	0.93	1.42
Ethylbenzene	0.05	0.05	0.09
Trans,trans,1,2,4-trimethylcyclohexane	0.19	0.20	0.29
Cis,trans,1,3,5-trimethylcyclohexane	0.03	0.03	0.05
Meta-Xylene	0.13	0.12	0.24
Para-Xylene	0.06	0.06	0.11
2,3-Dimethylheptane	0.11	0.12	0.17
3,4-Dimethylheptane D/L	0.02	0.02	0.03
3,4-Dimethylheptane L/D	0.02	0.02	0.03
4-Ethylheptane	0.04	0.04	0.06
4-Methyloctane	0.06	0.07	0.09
2-Methyloctane	0.07	0.08	0.11
Cis,cis,1,2,3,trimethylcyclohexane	0.03	0.03	0.05
3-Ethylheptane	0.03	0.03	0.05
3-Methyloctane	0.20	0.23	0.30
Cis,trans,1,2,4,trimethylcyclohexane	0.01	0.01	0.02
Ortho-Xylene	0.10	0.09	0.18
Cis-1-ethyl-3-methylcyclohexane	0.11	0.11	0.17
Trans-1-ethyl-4-methylcyclohexane	0.06	0.06	0.09
1-Nonene	0.25	0.27	0.38
Isobutylcyclopentane	0.04	0.04	0.06

8210 Mosley Rd.
Houston, TX 77075
713-943-9776 Telephone
713-943-3846 Facsimile

CORE LABORATORIES

Sample # 12 (500-650) **ASTM D-6623** **131514-6**

Component Name	WT %	LV %	Mol %
1-Ethyl-1-methylcyclohexane	0.04	0.04	0.06
Trans,trans,1,2,3,trimethylcyclohexane	0.04	0.04	0.06
N-Nonane	0.40	0.45	0.61
Trans-1-ethyl-3-methylcyclohexane	0.08	0.08	0.12
Trans-1-ethyl-2-methylcyclohexane	0.03	0.03	0.05
Isopropylbenzene	0.05	0.05	0.08
2,2-Dimethyloctane	0.01	0.01	0.01
Isopropylcyclohexane	0.06	0.06	0.09
Cis-1-ethyl-2-methylcyclohexane	0.02	0.02	0.03
2,4-Dimethyloctane	0.03	0.03	0.04
2,6-Dimethyloctane	0.16	0.18	0.22
2,5-Dimethyloctane	0.02	0.02	0.03
N-propylcyclohexane	0.08	0.08	0.12
N-butylcyclopentane	0.08	0.08	0.12
3,5-Dimethyloctane	0.03	0.03	0.04
2,7-Dimethyloctane	0.03	0.03	0.04
n-Propylbenzene	0.03	0.03	0.05
3,6-Dimethyloctane	0.07	0.08	0.10
1-Methyl-3-ethylbenzene	0.07	0.07	0.11
1-Methyl-4-ethylbenzene	0.04	0.04	0.06
2,3-Dimethyloctane	0.13	0.14	0.18
1,3,5-Trimethylbenzene	0.05	0.05	0.08
5-Methylnonane	0.03	0.03	0.04
4-Methylnonane	0.10	0.11	0.14
1-Methyl-2-ethylbenzene	0.09	0.08	0.15
2-Methylnonane	0.04	0.04	0.05
3-Ethyloctane	0.03	0.03	0.04
3-Methylnonane	0.13	0.14	0.18
C10 Naphthenes	0.14	0.15	0.19
C10 Paraffin	0.04	0.04	0.05
1,2,4-Trimethylbenzene	0.09	0.08	0.15
Cis-1-methyl-3-propylcyclohexane	0.03	0.03	0.04
Cis 1,3 diethylcyclohexane	0.08	0.08	0.11
Trans 1,4 diethylcyclohexane	0.04	0.04	0.06
Trans-1-methyl-3-propylcyclohexane	0.02	0.02	0.03
Isobutylbenzene	0.04	0.04	0.06
Cis-1-methyl-4-propylcyclohexane	0.01	0.01	0.01
N-Decane	0.41	0.46	0.56
1,2,3,4 Tet-methylcyclohexane	0.05	0.05	0.07
Trans 1,3 diethylcyclohexane	0.02	0.02	0.03
1,2,3-Trimethylbenzene	0.06	0.05	0.10
Trans 1,2 diethylcyclohexane	0.02	0.02	0.03
1-Methyl-3-isopropylbenzene	0.03	0.03	0.04

8210 Mosley Rd.
Houston, TX 77075
713-943-9776 Telephone
713-943-3846 Facsimile

CORE LABORATORIES

Sample # 12 (500-650) **ASTM D-6623** **131514-6**

Component Name	WT %	LV %	Mol %
1-Methyl-4-isopropylbenzene	0.19	0.18	0.28
Indan (2,3-Dihydroindene)	0.08	0.07	0.13
Sec-butylcyclohexane	0.12	0.12	0.17
Butylcyclohexane	0.08	0.08	0.11
1,3-Diethylbenzene	0.02	0.02	0.03
C11 Naphthenes	0.23	0.23	0.29
1-Methyl-4-n-propylbenzene	0.02	0.02	0.03
1,4-Diethylbenzene	0.08	0.08	0.12
1,3-Dimethyl-5-ethylbenzene	0.05	0.05	0.07
1,2-Diethylbenzene	0.03	0.03	0.04
1-Methyl-2-n-propylbenzene	0.05	0.05	0.07
Cis 1-methyl 4-ter-butylcyclohexane	0.05	0.05	0.06
4-Methyldecane	0.06	0.07	0.07
5-Methyldecane	0.06	0.07	0.07
1,4-Dimethyl-2-ethylbenzene	0.08	0.07	0.12
1,3-Dimethyl-4-ethylbenzene	0.05	0.05	0.07
3-Methyldecane	0.05	0.06	0.06
1,2-Dimethyl-4-ethylbenzene	0.07	0.07	0.10
1,3-Dimethyl-2-ethylbenzene	0.02	0.02	0.03
Tricyclodecane	0.06	0.06	0.09
1,2-Dimethyl-3-Ethylbenzene	0.07	0.06	0.10
N-Undecane	0.44	0.48	0.55
1,2,4,5-Tetramethylbenzene	0.04	0.04	0.06
1,2,3,5-Tetramethylbenzene	0.07	0.06	0.10
C11 Unidentified	0.64	0.66	0.77
4-Methylindan	0.07	0.06	0.10
5-Methylindan	0.12	0.10	0.18
1,2,3,4-Tetramethylbenzene	0.07	0.06	0.10
Tetralin	0.01	0.01	0.01
6-Methylundecane	0.19	0.21	0.22
4-Methylundecane	0.05	0.05	0.06
Naphthalene	0.04	0.03	0.06
3-Methylundecane	0.04	0.04	0.05
C11 Aromatic	1.50	1.41	1.97
N-Dodecane	0.46	0.50	0.52
Dodecanes	0.84	0.79	1.01
Pentamethylbenzene	0.07	0.06	0.09
2-Methylnaphthalene	0.42	0.36	0.57
1-Methylnaphthalene	0.14	0.11	0.19
Tridecanes	1.70	1.72	1.89
N-Tridecane	0.58	0.62	0.61
Tetradecanes	3.15	3.14	3.22
N-Tetradecane	1.08	1.15	1.06

8210 Mosley Rd.
Houston, TX 77075
713-943-9776 Telephone
713-943-3846 Facsimile

CORE LABORATORIES

Sample # 12 (500-650) **ASTM D-6623** **131514-6**

Component Name	WT %	LV %	Mol %
Pentadecanes	6.11	6.03	5.76
N-Pentadecane	1.41	1.50	1.29
Hexadecanes	8.09	7.92	7.08
N-Hexadecane	1.36	1.44	1.17
Heptadecanes	8.93	8.66	7.33
N-Heptadecane	1.47	1.55	1.19
Octadecanes	10.19	9.82	7.70
N-Octadecane	1.44	1.52	1.06
Nonadecanes	8.95	8.58	6.61
N-Nonadecane	1.36	1.42	0.98
Eicosanes	7.56	7.20	5.34
N-Eicosane	0.93	0.97	0.64
Heneicosanes	6.80	6.44	4.57
Docosanes	4.57	4.29	2.93
Tricosanes	2.30	2.15	1.41
Tetracosanes	0.47	0.44	0.28
Pentacosanes	0.03	0.03	0.02
Hexacosanes Plus	0.30	0.28	0.16
	100.00	100.00	100.00

Mol WT of Sample	194.32
Mol WT C6 Plus	204.43
Density of Sample	0.8193
Density C6 Plus	0.8263

RON	7.8
MON	7.2

Summary by Group

Totals

Group	%Wt	% Vol
Paraffin	3.44	4.12
Isoparaf.	3.87	4.45
Olefin	4.00	4.68
Naphthene	3.22	3.28
Aromatic	4.32	3.98
Oxygenates		
* Unidentified	81.15	79.49

8210 Mosley Rd.
Houston, TX 77075
713-943-9776 Telephone
713-943-3846 Facsimile

CORE LABORATORIES

Sample # 12 (500-650) **ASTM D-6623** **131514-6**

Summary by Carbon

Totals	Group	%Wt	% Vol
	C4	0.74	1.02
	C5	1.37	1.72
	C6	1.87	2.20
	C7	1.90	2.16
	C8	3.39	3.76
	C9	3.22	3.36
	C10	3.15	3.18
	C11	3.21	3.11

Composite by Carbon

Group	C#	%Wt	% Vol
Paraffin	C4	0.36	0.50
	C5	0.45	0.58
	C6	0.41	0.51
	C7	0.50	0.60
	C8	0.47	0.54
	C9	0.40	0.45
	C10	0.41	0.46
	C11	0.44	0.48
Isoparaf.	C4	0.04	0.06
	C5	0.21	0.28
	C6	0.36	0.44
	C7	0.36	0.42
	C8	0.94	1.09
	C9	0.75	0.84
	C10	0.85	0.91
	C11	0.36	0.41
Olefin	C4	0.34	0.46
	C5	0.65	0.79
	C6	0.89	1.03
	C7	0.62	0.71
	C8	1.25	1.42
	C9	0.25	0.27
	C10	0.00	0.00
	C11		

8210 Mosley Rd.
Houston, TX 77075
713-943-9776 Telephone
713-943-3846 Facsimile

CORE LABORATORIES

Sample # 12 (500-650) **ASTM D-6623** **131514-6**

Naphthene	C4		
	C5	0.06	0.07
	C6	0.21	0.22
	C7	0.35	0.36
	C8	0.39	0.39
	C9	1.26	1.28
	C10	0.67	0.68
	C11	0.28	0.28
Aromatic	C4		
	C5		
	C6	0.00	0.00
	C7	0.07	0.07
	C8	0.34	0.32
	C9	0.56	0.52
	C10	1.22	1.13
	C11	2.13	1.94

The analytical results , opinions or interpretations contained in this report are based upon information and material supplied by the client for whose exclusive and confidential use this report has been made. The analytical results, opinions, or interpretations expressed represent the best judgement of Core Laboratories. Core Laboratories, however, makes no warranty or representation, expressed or implied, of any type, and expressly disclaims same as to the productivity, proper operations or profitableness of any oil, gas, coal, or other mineral property, well or sand in connection with such report is used or relied upon for any reason whatsoever. The report shall not be reproduced, in whole or in part, without the written approval of Core Laboratories.

FALKNER RED-RIVER LABORATORIES, INC.

1039 PEARL DRIVE·P.O. BOX 5438
BOSSIER CITY, LA 71111
PHONE: 318-746-2404·FAX: 318-742-1448

LAB REPORT #: 4-142681

21 Dr

REPORT DATE: April 17, 2003

SUPPLIER: John D. Jones Engineering Dakota

PAGE 1 OF 2

REQUESTED BY: John D. Jones

DATE RECEIVED: March 1, 2003

Sample #14

Sample #	Crude #	Crude #	Crude #	Crude #	Crude #	Crude #
Grade	IBP-200	200-300	300-350	350-500	500-650	650-1025
Gravity	76.5	56.0	48.6	42.7	41.0	25.4
I.B.P.	77	200	296	368	148	---
5% Recovered At	96	219	300	388	233	---
10% "	107	226	308	391	290	---
20%	123	230	315	399	420	---
30%	132	233	318	408	485	---
40%	144	237	320	416	516	---
50%	155	241	322	427	540	---
60%	163	---	325	435	557	---
70%	171	253	330	446	574	---
80%	181	258	340	457	590	---
90%	199	270	---	473	610	---
95%	---	276	---	490	629	---
End Point	242	330	350	510	653	---
Recovery	94.0	99.0	95.0	99.0	99.0	---
Residue	1.0	0.5	0.0	1.0	1.0	---
Loss	5.0	0.5	5.0	0.0	0.0	---
Specific Gravity	.6803	.7547	.7857	.8123	.8203	---
Sulfur, wt%	.004	.004	.014	.015	.039	.321
Freeze Point	---	---	Below-65°C	---	---	---
Flash Point	---	---	83°F	---	---	---
Aromatics	---	---	20.58	16.78	---	---
Olefins	---	---	1.24	1.62	---	---
Saturate	---	---	78.18	81.60	---	---
Nitrogen	---	<1	<1	---	---	---
Gross Heat of Combustion	---	---	19816	---	---	---
US Cetane Index	---	---	---	46.9	---	---
Yield L.V. %	5.5	17.0	7.0	20.0	19.0	31.5
Yield wt %	4.57	15.67	6.72	19.84	19.03	34.69
Smoke point	---	---	---	28	---	---
Cloud Point	---	---	---	-44°F	---	---
H2S	---	---	---	---	Pos	---
RSH	---	---	---	---	Off Scale	---
Viscosity @100°	---	---	---	---	112.8 SUS	1552.3 SUS
Viscosity @210°	---	---	---	---	---	69.98 SUS

REMARKS:

: The results of this test relate only to the items tested.
) This report will not be reproduced except in full, without the written approval of the laboratory.

Richard L. Mosher
FOR FALKNER RED RIVER LABORATORIES, INC

FALKNER RED-RIVER LABORATORIES, INC.

1039 PEARL DRIVE·P.O. BOX 5438
BOSSIER CITY, LA 71111
PHONE: 318-746-2404·FAX: 318-742-1448

LAB REPORT #: 4-142681

REPORT DATE: April 17, 2003

SUPPLIER: John D. Jones Engineering

PAGE 1 OF 2

REQUESTED BY: John D. Jones

DATE RECEIVED: March 1, 2003

Samples #14

Sample #	Crude #	Crude #	Crude #	Crude #	Crude #	Crude #
Grade	IBP-200	200-300	300-350	350-500	500-650	650-1025
Gravity	76.5	56.0	48.6	42.7	41.0	---
I.B.P.	77	200	296	368	148	---
5% Recovered At	96	219	300	388	233	---
10% "	107	226	308	391	290	---
20%	123	230	315	399	420	---
30%	132	233	318	408	485	---
40%	144	237	320	416	516	---
50%	155	241	322	427	540	---
60%	163		325	435	557	---
70%	171	253	330	446	574	---
80%	181	258	340	457	590	---
90%	199	270		473	610	
95%	---	276		490	629	---
End Point	242	330	350	510	653	---
Recovery	94.0	99.0	95.0	99.0	99.0	---
Residue	1.0	0.5	0.0	1.0	1.0	---
Loss	5.0	0.5	5.0	0.0	0.0	---
Specific Gravity	.6803	.7547	.7857	.8123	.8203	---
Sulfur, wt%	.004	.004	.014	.015	.039	.321
Freeze Point	---	---	Below-65°C	---	---	---
Flash Point	---	---	83°F	---	---	---
Aromatics	---	---	20.58	16.78	---	---
Olefins	---	---	1.24	1.62	---	---
Saturate	---	---	78.18	81.60	---	---
Nitrogen	---	<1	<1	---	---	---
Gross Heat of Combustion	---	---		---	---	---
US Cetane Index	---	---	---	46.9	---	---
Yield L.V. %	5.5	17.0	7.0	20.0	19.0	31.5
Yield wt %						
Smoke point	---	---	---	28	---	---
Cloud Point	---	---	---	-44°F	---	---
H2S	---	---	---	---	Pos	---
RSII	---	---	---	---	Off Scale	---
Viscosity @100°	---	---	---	---	112 SUS	1552.3 SUS
Viscosity @210°	---	---	---	---	---	69.98 SUS

REMARKS:

A: The results of this test relate only to the items tested.
B: This report will not be reproduced except in full, without the written approval of the laboratory.

R. L. Walker
FOR FALKNER RED RIVER LABORATORIES, INC

Core Lab
PETROLEUM SERVICES

8210 Mosley Rd.
Houston, TX 77075
713 943-9776 Telephone
713 943-3846 Facsimile

CORE LABORATORIES

RICHARD MOSHER
FALKNER-RED RIVER LABS

1039 PEARL DRIVE
BOSSIER CITY, LA 71111

Date Reported: 4/22/03
Date Received: 4/10/03

Analytical Report

Test	Result	Units	Method	Date	Analyst
Sample Number: 131514-007	**Sample ID:**	**Sample #14 Crude**			**Sample Rcvd:**
Sample Date:	**Description:**				**4/10/03**
Simulated Distillation-Crude					
IBP	19	Deg F	ASTM D-5307	4/21/03	DM
5 % off	156	Deg F			
10 % off	208	Deg F			
15 % off	240	Deg F			
20 % off	277	Deg F			
25 % off	312	Deg F			
30 % off	349	Deg F			
35 % off	395	Deg F			
40 % off	438	Deg F			
45 % off	478	Deg F			
50 % off	516	Deg F			
55 % off	558	Deg F			
60 % off	597	Deg F			
65 % off	642	Deg F			
70 % off	690	Deg F			
75 % off	738	Deg F			
80 % off	789	Deg F			
85 % off	843	Deg F			
90 % off	911	Deg F			
95 % off	996	Deg F			
% Recovered	95.2	@ 1000 Deg.			
% Residue	4.8	@ 1000 Deg.			
Sample Number: 131514-008	**Sample ID:**	**Sample #14 (350-500)**			**Sample Rcvd:**
Sample Date:	**Description:**				**4/10/03**
Capillary Gas Chromatography	Attached		ASTM D-5134 Mod	4/11/03	PKT

The analytical results, opinions or interpretations contained in this report are based upon information and material supplied by the client for whose exclusive and confidential use this report has been made. The analytical results, opinions or interpretations expressed represent the best judgment of Core Laboratories. Core Laboratories, however, makes no warranty or representation, express or implied, of any type, and expressly disclaims same as to the productivity, proper operations or profitableness of any oil, gas, coal, or other mineral, property, well or sand in connection with which such report is used or relied upon for any reason whatsoever. This report shall not be reproduced, in whole or in part, without the written approval of Core Laboratories.

FALKNER RED-RIVER LABORATORIES, INC.

1039 PEARL DRIVE·P.O. BOX 5438
BOSSIER CITY, LA 71111
PHONE: 318-746-2404·FAX: 318-742-1448

LAB REPORT #: 4-142 681

REPORT DATE: March 18, 2003

SUPPLIER: John D. Jones Engineering

PAGE 1 OF 2

REQUESTED BY: John D. Jones

DATE RECEIVED: January 6, 2003

Product	Crude	Crude			
Grade	Mancos	#14			
Tank #	Battery 2	Dakota			
Sample #					
Date Shipped					
Gravity	32.5	41.3			
I.B.P.	162	124			
5% Recovered At	240	194			
10% "	304	232			
20%	405	285			
30%	496	354			
40%	563	427			
50%	634	507			
60%	695	587			
70%	712	673			
80%		724			
90%					
95%					
End Point	716(cracked)	732(cracked)			
Recovery	83.0	81.0			
Residue	16.5	18.0			
Loss	.5	1.0			
Specific Gravity	.8628	.8189			
RVP	.4	.6			
Pour Point	-40°F	+28°F			
Sulfur, wt%	.148	.027			
Flash, °F	+48°F	+34°F			
Salt content	.07	.05			
Nitrogen					

REMARKS:

A: The results of this test relate only to the items tested.
B: This report will not be reproduced except in full, without the written approval of the laboratory.

FOR FALKNER RED RIVER LABORATORIES, INC

8210 Mosley Rd.
Houston, TX 77075
713 943-9776 Telephone
713 943-3846 Facsimile

CORE LABORATORIES

JOHN I FALKNER
FALKNER-RED RIVER LABS

1039 PEARL DRIVE
BOSSIER CITY, LA 71111

Date Reported: 6/10/03
Date Received: 6/9/03

Analytical Report

Test	Result	Units	Method	Date	Analyst
Sample Number: 132369-001	**Sample ID:** Sample 5 Bottoms				**Sample Rcvd:**
Sample Date:	**Description:**				6/9/03
Bromine Number	2.2	g/100g	ASTM D-1159	6/10/03	CB
Sample Number: 132369-002	**Sample ID:** Sample 12 Bottoms				**Sample Rcvd:**
Sample Date:	**Description:**				6/9/03
Bromine Number	8.7	g/100g	ASTM D-1159	6/10/03	CB
Sample Number: 132369-003	**Sample ID:** Sample 14 Bottoms				**Sample Rcvd:**
Sample Date:	**Description:**				6/9/03
Bromine Number	7.7	g/100g	ASTM D-1159	6/10/03	CB

Approved By: Pat Gideons
Laboratory Supervisor

The analytical results, opinions or interpretations contained in this report are based upon information and material supplied by the client for whose exclusive and confidential use this report has been made. The analytical results, opinions or interpretations expressed represent the best judgment of Core Laboratories. Core Laboratories, however, makes no warranty or representation, express or implied, of any type, and expressly disclaims same as to the productivity, proper operations or profitableness of any oil, gas, coal, or other mineral, property, well or sand in connection with which such report is used or relied upon for any reason whatsoever. This report shall not be reproduced, in whole or in part, without the written approval of Core Laboratories.

8210 Mosley Rd.
Houston, TX 77075
713 943-9776 Telephone
713 943-3846 Facsimile

CORE LABORATORIES

DAKOTA

JOHN I FALKNER
FALKNER-RED RIVER LABS

1039 PEARL DRIVE
BOSSIER CITY, LA 71111

Sample Number: 131169-005
Sample Date:
Date Reported: 3/26/03
Date Received: 3/18/03
Sample ID: [redacted]
Description:

Dakota

Analytical Report

Test	Result	Units	Method	Date	Analyst
Nitrogen Total by Chemilum.	87	ppm wt	ASTM D-4629	3/24/03	JT

Approved By: Jean Waits
Supervising Chemist

The analytical results, opinions or interpretations contained in this report are based upon information and material supplied by the client for whose exclusive and confidential use this report has been made. The analytical results, opinions or interpretations expressed represent the best judgment of Core Laboratories. Core Laboratories, however, makes no warranty or representation, express or implied, of any type, and expressly disclaims same as to the productivity, proper operations or profitableness of any oil, gas, coal, or other mineral, property, well or sand in connection with which such report is used or relied upon for any reason whatsoever. This report shall not be reproduced, in whole or in part, without the written approval of Core Laboratories.

8210 Mosley Rd.
Houston, TX 77075
713 943-9776 Telephone
713 943-3846 Facsimile

CORE LABORATORIES

JOHN I FALKNER
FALKNER-RED RIVER LABS

1039 PEARL DRIVE
BOSSIER CITY, LA 71111

Sample Number: 131169-006
Sample Date:
Date Reported: 3/26/03
Date Received: 3/18/03
Sample ID: [redacted]
Description:

Analytical Report

Test	Result	Units	Method	Date	Analyst
Capillary Gas Chromatography	Attached		ASTM D-5134 Mod	3/18/03	PKT

Approved By: Jean Waits
Supervising Chemist

The analytical results, opinions or interpretations contained in this report are based upon information and material supplied by the client for whose exclusive and confidential use this report has been made. The analytical results, opinions or interpretations expressed represent the best judgment of Core Laboratories. Core Laboratories, however, makes no warranty or representation, express or implied, of any type, and expressly disclaims name as to the productivity, proper operations or profitableness of any oil, gas, coal, or other mineral, property, well or sand in connection with which such report is used or relied upon for any reason whatsoever. This report shall not be reproduced, in whole or in part, without the written approval of Core Laboratories.

8210 Mosley Rd.
Houston, TX 77075
713-943-9776 Telephone
713-943-3846 Facsimile

CORE LABORATORIES

#14 IBP-200 **ASTM D-6623** **131169-6**

Component Name	WT %	LV %	Mol %
Ethane	0.03	0.06	0.08
Propane	1.28	1.71	2.33
Isobutane	1.50	1.81	2.08
N-Butane	6.90	7.99	9.53
2,2-Dimethylpropane	0.02	0.02	0.02
Isopentane	9.06	9.81	10.08
N-Pentane	11.69	12.53	13.00
2,2-Dimethylbutane	0.25	0.26	0.23
Cyclopentane	1.90	1.72	2.18
2,3-Dimethylbutane	1.26	1.28	1.18
2-Methylpentane	7.70	7.93	7.18
3-Methylpentane	4.87	4.93	4.54
N-Hexane	12.54	12.77	11.68
2,2-Dimethylpentane	0.36	0.36	0.29
Methylcyclopentane	9.35	8.39	8.92
2,4-Dimethylpentane	0.89	0.89	0.71
2,2,3-Trimethylbutane	0.09	0.09	0.07
Benzene	1.89	1.45	1.95
3,3-Dimethylpentane	0.12	0.12	0.10
Cyclohexane	7.85	6.79	7.49
2-Methylhexane	3.14	3.11	2.52
2,3-Dimethylpentane	0.95	0.92	0.76
1,1-Dimethylcyclopentane	0.91	0.81	0.75
3-Methylhexane	2.72	2.66	2.18
Cis-1,3-dimethylcyclopentane	1.49	1.35	1.22
Trans-1,3-dimethylcyclopentane	1.28	1.15	1.05
3-Ethylpentane	0.14	0.13	0.11
Trans-1,2-dimethylcyclopentane	1.82	1.63	1.49
2,2,4-Trimethylpentane	0.01	0.01	0.01
N-Heptane	2.73	2.69	2.19
Methylcyclohexane	2.78	2.43	2.28
1,1,3-Trimethylcyclopentane	0.14	0.13	0.10
Ethylcyclopentane	0.07	0.06	0.06
2,5-Dimethylhexane	0.03	0.03	0.02
2,4-Dimethylhexane	0.03	0.03	0.02
Trans,cis-1,2,4-trimethylcyclopentane	0.06	0.05	0.04
Trans,cis-1,2,3-trimethylcyclopentane	0.04	0.04	0.03
Toluene	0.62	0.48	0.54
2,3-Dimethylhexane	0.02	0.02	0.01
2-Methylheptane	0.04	0.04	0.03
4-Methylheptane	0.01	0.01	0.01
Cis-1,3 dimethylcyclohexane	0.03	0.03	0.02
3-Methylheptane	0.03	0.03	0.02

Core Lab
PETROLEUM SERVICES

8210 Mosley Rd.
Houston, TX 77075
713-943-9776 Telephone
713-943-3846 Facsimile

CORE LABORATORIES

#14 IBP-200 ASTM D-6623 131169-6

Component Name	WT %	LV %	Mol %
Trans-1,4-dimethylcyclohexane	0.01	0.01	0.01
Trans-1,2,dimethylcyclohexane	0.01	0.01	0.01
N-Octane	0.02	0.02	0.01
1,1,3-Trimethylcyclohexane	0.01	0.01	0.01
Trans,trans,1,2,4-trimethylcyclohexane	0.01	0.01	0.01
3-Ethylheptane	0.01	0.01	0.01
Trans-1-ethyl-4-methylcyclohexane	0.03	0.03	0.02
Isobutylcyclopentane	0.02	0.02	0.01
N-Nonane	0.01	0.01	0.01
Trans-1-ethyl-3-methylcyclohexane	0.03	0.03	0.02
2,2-Dimethyloctane	0.03	0.03	0.02
Isopropylcyclohexane	0.01	0.01	0.01
2,4-Dimethyloctane	0.01	0.01	0.01
2,6-Dimethyloctane	0.03	0.03	0.02
N-propylcyclohexane	0.06	0.05	0.04
N-butylcyclopentane	0.01	0.01	0.01
3,6-Dimethyloctane	0.02	0.02	0.01
1-Methyl-3-ethylbenzene	0.01	0.01	0.01
1-Methyl-4-ethylbenzene	0.01	0.01	0.01
2,3-Dimethyloctane	0.03	0.03	0.02
1,3,5-Trimethylbenzene	0.03	0.02	0.02
5-Methylnonane	0.02	0.02	0.01
4-Methylnonane	0.01	0.01	0.01
1-Methyl-2-ethylbenzene	0.02	0.02	0.01
2-Methylnonane	0.02	0.02	0.01
3-Ethyloctane	0.02	0.02	0.01
3-Methylnonane	0.05	0.05	0.03
1,2,3,4 Tet-methylcyclohexane	0.01	0.01	0.01
C10 Naphthenes	0.01	0.01	0.01
1,2,4-Trimethylbenzene	0.07	0.05	0.05
Cis-1-methyl-3-propylcyclohexane	0.05	0.04	0.03
Trans 1,4 diethylcyclohexane	0.05	0.04	0.03
Trans-1-methyl-3-propylcyclohexane	0.01	0.01	0.01
1-Ethyl-2,3-dimethylcyclohexane	0.01	0.01	0.01
Isobutylbenzene	0.02	0.02	0.01
Cis-1-methyl-4-propylcyclohexane	0.01	0.01	0.01
N-Decane	0.04	0.04	0.02
1,2,3,4 Tet-methylcyclohexane	0.01	0.01	0.01
1,2,3-Trimethylbenzene	0.04	0.03	0.03
Trans 1,2 diethylcyclohexane	0.01	0.01	0.01
1-Methyl-3-isopropylbenzene	0.01	0.01	0.01
Cis 1,4 diethylcyclohexane	0.01	0.01	0.01
1-Methyl-4-isopropylbenzene	0.01	0.01	0.01

Core Lab
PETROLEUM SERVICES

8210 Mosley Rd.
Houston, TX 77075
713-943-9776 Telephone
713-943-3846 Facsimile

CORE LABORATORIES

#14 IBP-200 **ASTM D-6523** **131169-6**

Component Name	WT %	LV %	Mol %
Indan (2,3-Dihydroindene)	0.02	0.01	0.01
Sec-butylcyclohexane	0.07	0.06	0.04
Butylcyclohexane	0.05	0.04	0.03
1,3-Diethylbenzene	0.01	0.01	0.01
C11 Naphthenes	0.01	0.01	0.01
1-Methyl-3-n-propylbenzene	0.02	0.02	0.01
1,3-Dimethyl-5-ethylbenzene	0.01	0.01	0.01
1-Methyl-2-n-propylbenzene	0.01	0.01	0.01
Cis 1-methyl 4-ter-butylcyclohexane	0.01	0.01	0.01
4-Methyldecane	0.02	0.02	0.01
1,4-Dimethyl-2-ethylbenzene	0.01	0.01	0.01
1,3-Dimethyl-4-ethylbenzene	0.01	0.01	0.01
3-Methyldecane	0.01	0.01	0.01
C11 Paraffins	0.01	0.01	0.01
1,2-Dimethyl-4-ethylbenzene	0.01	0.01	0.01
N-Undecane	0.01	0.01	0.01
4-Methylundecane	0.01	0.01	0.00
Tetradecanes	0.03	0.02	0.01
Pentadecanes	0.01	0.01	0.00
Hexadecanes	0.02	0.02	0.01
Heptadecanes	0.01	0.01	0.00
Octadecanes	0.02	0.02	0.01
Eicosanes	0.01	0.01	0.00
Heneicosanes	0.02	0.02	0.01
Docosanes	0.01	0.01	0.00
Tetracosanes	0.01	0.01	0.00
	100.00	100.00	100.00

Mol WT of Sample	80.42
Mol WT C6 Plus	89.00
Density of Sample	0.6779
Density C6 Plus	0.7140

Core Lab
PETROLEUM SERVICES

8210 Mosley Rd.
Houston, TX 77075
713-943-9776 Telephone
713-943-3846 Facsimile

CORE LABORATORIES

#14 IBP-200 ASTM D-6623 131169-6

Summary by Group

Totals	Group	%Wt	% Vol
	Paraffin	33.94	36.06
	Isoparaf.	33.53	34.78
	Olefin	0.00	0.00
	Naphthene	28.24	25.05
	Aromatic	2.83	2.20
	Oxygenates		
	Unidentified	1.46	1.91
		100.00	100.00

Summary by Carbon

Totals	Group	%Wt	% Vol
	C4	8.40	9.80
	C5	22.67	24.08
	C6	45.71	43.80
	C7	20.11	18.88
	C8	0.48	0.46
	C9	0.40	0.34
	C10	0.70	0.66
	C11	0.07	0.07

Composite by Carbon

Group	C#	%Wt	% Vol
Paraffin	C4	6.90	7.99
	C5	11.69	12.53
	C6	12.54	12.77
	C7	2.73	2.69
	C8	0.02	0.02
	C9	0.01	0.01
	C10	0.04	0.04
	C11	0.01	0.01

8210 Mosley Rd.
Houston, TX 77075
713-943-9776 Telephone
713-943-3846 Facsimile

CORE LABORATORIES

#1 IBP-200 **ASTM D-6623** **131169-6**

Isoparaf.	C4	1.50	1.81
	C5	9.08	9.83
	C6	14.08	14.40
	C7	8.41	8.28
	C8	0.17	0.17
	C9	0.01	0.01
	C10	0.24	0.24
	C11	0.04	0.04
Olefin	C4	0.00	0.00
	C5	0.00	0.00
	C6	0.00	0.00
	C7	0.00	0.00
	C8	0.00	0.00
	C9	0.00	0.00
	C10	0.00	0.00
	C11		
Naphthene	C4		
	C5	1.90	1.72
	C6	17.20	15.18
	C7	8.35	7.43
	C8	0.29	0.27
	C9	0.18	0.17
	C10	0.30	0.26
	C11	0.02	0.02
Aromatic	C4		
	C5		
	C6	1.89	1.45
	C7	0.62	0.48
	C8	0.00	0.00
	C9	0.20	0.15
	C10	0.12	0.12
	C11	0.00	0.00

The analytical results, opinions or interpretations contained in this report are based upon information and material supplied by the client for whose exclusive and confidential use this report has been made. The analytical results, opinions, or interpretations expressed represent the best judgement of Core Laboratories. Core Laboratories, however, makes no warranty or representation, expressed or implied, of any type, and expressly disclaims same as to the productivity, proper operations or profitableness of any oil, gas, coal, or other mineral property, well or sand in connection with such report is used or relied upon for any reason whatsoever. The report shall not be reproduced, in whole or in part, without the written approval of Core Laboratories.

8210 Mosley Rd.
Houston, TX 77075
713 943-9776 Telephone
713 943-3846 Facsimile

Core Lab
PETROLEUM SERVICES

CORE LABORATORIES

~~[illegible]~~ DAKOTA

#14

JOHN I FALKNER
FALKNER-RED RIVER LABS

1039 PEARL DRIVE
BOSSIER CITY, LA 71111

Sample Number: 131169-007
Sample Date:
Date Reported: 3/26/03
Date Received: 3/18/03
Sample ID: [illegible]200-800[illegible]
Description:

Analytical Report

Test	Result	Units	Method	Date	Analyst
Capillary Gas Chromatography	Attached		ASTM D-5134 Mod	3/18/03	PKT
Nitrogen Total by Chemilum.	<1	ppm wt	ASTM D-4629	3/20/03	JT

Approved By: Jean Waits
Supervising Chemist

The analytical results, opinions or interpretations contained in this report are based upon information and material supplied by the client for whose exclusive and confidential use this report has been made. The analytical results, opinions or interpretations expressed represent the best judgment of Core Laboratories. Core Laboratories, however, makes no warranty or representation, express or implied, of any type, and expressly disclaims same as to the productivity, proper operations or profitableness of any oil, gas, coal, or other mineral, property, well or sand in connection with which such report is used or relied upon for any reason whatsoever. This report shall not be reproduced, in whole or in part, without the written approval of Core Laboratories.

Core Lab
PETROLEUM SERVICES

8210 Mosley Rd.
Houston, TX 77075
713-943-9776 Telephone
713-943-3846 Facsimile

CORE LABORATORIES

[redacted]200-300 **ASTM D-6623** **131169-7**

Component Name	WT %	LV %	Mol %
Propane	0.11	0.16	0.27
Isobutane	0.07	0.09	0.13
N-Butane	0.23	0.30	0.43
Isopentane	0.14	0.17	0.21
N-Pentane	0.15	0.18	0.22
Cyclopentane	0.03	0.03	0.05
2,3-Dimethylbutane	0.02	0.02	0.02
2-Methylpentane	0.11	0.13	0.14
3-Methylpentane	0.09	0.10	0.11
N-Hexane	0.33	0.37	0.41
2,2-Dimethylpentane	0.03	0.03	0.03
Methylcyclopentane	0.51	0.51	0.65
2,4-Dimethylpentane	0.09	0.10	0.10
2,2,3-Trimethylbutane	0.01	0.01	0.01
Benzene	0.12	0.10	0.17
3,3-Dimethylpentane	0.03	0.03	0.03
Cyclohexane	1.28	1.23	1.64
2-Methylhexane	1.54	1.70	1.65
2,3-Dimethylpentane	0.47	0.51	0.51
1,1-Dimethylcyclopentane	0.39	0.39	0.43
3-Methylhexane	1.89	2.06	2.03
Cis-1,3-dimethylcyclopentane	1.03	1.04	1.13
Trans-1,3-dimethylcyclopentane	1.04	1.04	1.14
3-Ethylpentane	0.14	0.15	0.15
Trans-1,2-dimethylcyclopentane	1.56	1.56	1.71
2,2,4-Trimethylpentane	0.02	0.02	0.02
N-Heptane	6.61	7.25	7.10
Methylcyclohexane	13.04	12.69	14.32
1,1,3-Trimethylcyclopentane	1.27	1.27	1.22
Ethylcyclopentane	0.48	0.47	0.53
2,5-Dimethylhexane	0.49	0.53	0.46
2,4-Dimethylhexane	0.59	0.63	0.56
Trans,cis-1,2,4-trimethylcyclopentane	1.16	1.16	1.11
3,3-Dimethylhexane	0.14	0.15	0.13
Trans,cis-1,2,3-trimethylcyclopentane	0.98	0.97	0.94
2,3,4-Trimethylpentane	0.10	0.10	0.09
Toluene	5.18	4.48	6.05
2,3-Dimethylhexane	0.87	0.92	0.82
2-Methyl-3-Ethylpentane	0.09	0.09	0.08
1,1,2-trimethylcyclopentane	0.01	0.01	0.01
2-Methylheptane	3.52	3.78	3.32
4-Methylheptane	1.04	1.11	0.98
3,4-Dimethylhexane	0.12	0.13	0.11

8210 Mosley Rd.
Houston, TX 77075
713-943-9776 Telephone
713-943-3846 Facsimile

CORE LABORATORIES

#14 200-300 **ASTM D-6623** 131169-7

Component Name	WT %	LV %	Mol %
Cis,trans,1,2,4-trimethylcyclopentane	0.17	0.17	0.16
Cis-1,3 dimethylcyclohexane	4.45	4.36	4.27
3-Methylheptane	2.82	2.99	2.66
Trans-1,4-dimethylcyclohexane	2.04	2.01	1.96
1,1-Dimethylcyclohexane	0.62	0.60	0.59
2,2,5-Trimethylhexane	0.07	0.07	0.06
Trans-1-ethyl-3-methylcyclopentane	0.17	0.17	0.16
Cis-1-ethyl-3-methylcyclopentane	0.17	0.16	0.16
Trans-1-ethyl-2-methylcyclopentane	0.29	0.28	0.28
1-Ethyl-1-methylcyclopentane	0.11	0.11	0.11
Trans-1,2,dimethylcyclohexane	2.13	2.06	2.04
Trans-1,3,dimethylcyclohexane	0.02	0.02	0.02
N-Octane	8.79	9.38	8.30
Isopropylcyclopentane	0.18	0.17	0.17
2,4,4-Trimethylhexane	0.02	0.02	0.02
2,3,5-Trimethylhexane	0.08	0.08	0.07
Cis-1-ethyl-2-methylcyclopentane	0.04	0.04	0.04
2,2-Dimethylheptane	0.23	0.24	0.19
Cis-1,2-dimethylcyclohexane	0.41	0.39	0.39
2,4-Dimethylheptane	0.64	0.67	0.54
4,4-Dimethylheptane	0.06	0.06	0.05
Ethylcyclohexane	3.24	3.08	3.11
Cis,cis,1-3-5,trimethylcyclohexane	0.06	0.06	0.05
2,6-Dimethylheptane	1.06	1.12	0.89
1,1,3-Trimethylcyclohexane	1.35	1.30	1.15
C9 Naphthenes	0.83	0.80	0.71
2,5-Dimethylheptane	1.19	1.24	1.00
3,5-Dimethylheptane	0.25	0.26	0.21
Ethylbenzene	0.93	0.80	0.94
Trans,trans,1,2,4-trimethylcyclohexane	1.00	0.97	0.85
Cis,trans,1,3,5-trimethylcyclohexane	0.06	0.06	0.05
Meta-Xylene	4.56	3.96	4.63
Para-Xylene	1.43	1.25	1.45
2,3-Dimethylheptane	1.01	1.04	0.85
3,4-Dimethylheptane D/L	0.08	0.08	0.07
3,4-Dimethylheptane L/D	0.43	0.44	0.36
4-Methyloctane	0.80	0.83	0.67
2-Methyloctane	0.99	1.04	0.83
Cis,cis,1,2,3,trimethylcyclohexane	0.11	0.11	0.09
3-Ethylheptane	0.32	0.34	0.27
3-Methyloctane	1.11	1.15	0.93
Ortho-Xylene	1.77	1.51	1.80
Trans-1-Methyl-2-propylcyclopentane	0.04	0.04	0.03

8210 Mosley Rd.
Houston, TX 77075
713-943-9776 Telephone
713-943-3846 Facsimile

CORE LABORATORIES

#14 200-300 | **ASTM D-6623** | **131169-7**

Component Name	WT %	LV %	Mol %
Cis-1-ethyl-3-methylcyclohexane	0.13	0.12	0.11
Trans-1-ethyl-4-methylcyclohexane	0.69	0.65	0.59
Isobutylcyclopentane	0.48	0.46	0.41
1-Ethyl-1-methylcyclohexane	0.05	0.05	0.04
Cis,trans,1,2,3,trimethylcyclohexane	0.07	0.07	0.06
Trans,trans,1,2,3,trimethylcyclohexane	0.04	0.04	0.03
N-Nonane	2.55	2.67	2.14
Trans-1-ethyl-3-methylcyclohexane	0.28	0.27	0.24
Trans-1-ethyl-2-methylcyclohexane	0.09	0.09	0.08
Isopropylbenzene	0.09	0.08	0.08
2,2-Dimethyloctane	0.25	0.26	0.19
Isopropylcyclohexane	0.07	0.07	0.06
Cis-1-ethyl-2-methylcyclohexane	0.03	0.03	0.03
2,4-Dimethyloctane	0.15	0.16	0.11
2,6-Dimethyloctane	0.19	0.20	0.14
2,5-Dimethyloctane	0.04	0.04	0.03
N-propylcyclohexane	0.31	0.29	0.26
N-butylcyclopentane	0.05	0.05	0.04
2,7-Dimethyloctane	0.03	0.03	0.02
n-Propylbenzene	0.13	0.11	0.12
3,6-Dimethyloctane	0.05	0.05	0.04
1-Methyl-3-ethylbenzene	0.15	0.13	0.13
1-Methyl-4-ethylbenzene	0.08	0.07	0.07
1,3,5-Trimethylbenzene	0.12	0.10	0.11
5-Methylnonane	0.02	0.02	0.02
4-Methylnonane	0.04	0.04	0.03
1-Methyl-2-ethylbenzene	0.04	0.03	0.04
2-Methylnonane	0.03	0.03	0.02
3-Ethyloctane	0.01	0.01	0.01
3-Methylnonane	0.05	0.05	0.04
1,2,3,4 Tet-methylcyclohexane	0.01	0.01	0.01
C10 Naphthenes	0.03	0.03	0.02
1,2,4-Trimethylbenzene	0.10	0.09	0.09
Cis-1-methyl-3-propylcyclohexane	0.02	0.02	0.02
Trans 1,4 diethylcyclohexane	0.02	0.02	0.02
N-Decane	0.10	0.10	0.08
1,2,3-Trimethylbenzene	0.01	0.01	0.01
Sec-butylcyclohexane	0.01	0.01	0.01
Butylcyclohexane	0.01	0.01	0.01
N-Undecane	0.01	0.01	0.01
4-Methylundecane	0.01	0.01	0.01
C11 Aromatic	0.01	0.01	0.01
Tetradecanes	0.02	0.02	0.01

8210 Mosley Rd.
Houston, TX 77075
713-943-9776 Telephone
713-943-3846 Facsimile

CORE LABORATORIES

#14 200-300 **ASTM D-6623** 131169-7

Component Name	WT %	LV %	Mol %
Hexadecanes	0.01	0.01	0.00
Heptadecanes	0.01	0.01	0.00
Octadecanes	0.01	0.01	0.00
Eicosanes	0.01	0.01	0.00
Heneicosanes	0.01	0.01	0.00
Docosanes	0.01	0.01	0.00
Tetracosanes	0.01	0.01	0.00
Pentacosanes	0.01	0.01	0.00
	100.00	100.00	100.00

Mol WT of Sample	107.69
Mol WT C6 Plus	108.29
Density of Sample	0.7546
Density C6 Plus	0.7561

Summary by Group

Totals	Group	%Wt	% Vol
	Paraffin	18.77	20.26
	Isoparaf.	23.53	25.12
	Olefin	0.00	0.00
	Naphthene	42.66	41.62
	Aromatic	14.72	12.73
	Oxygenates		
*	Unidentified	0.22	0.27
		100.00	100.00

Summary by Carbon

Totals	Group	%Wt	% Vol
	C4	0.30	0.39
	C5	0.32	0.38
	C6	2.46	2.46
	C7	33.53	33.51
	C8	44.74	44.38
	C9	17.35	17.50
	C10	1.06	1.09
	C11	0.02	0.02

8210 Mosley Rd.
Houston, TX 77075
713-943-9776 Telephone
713-943-3846 Facsimile

CORE LABORATORIES

#14 200-300 ASTM D-6623 131169-7

Composite by Carbon

Group	C#	%Wt	% Vol
Paraffin	C4	0.23	0.30
	C5	0.15	0.18
	C6	0.33	0.37
	C7	6.61	7.25
	C8	8.79	9.38
	C9	2.55	2.67
	C10	0.10	0.10
	C11	0.01	0.01
Isoparaf.	C4	0.07	0.09
	C5	0.14	0.17
	C6	0.22	0.25
	C7	4.20	4.59
	C8	9.80	10.45
	C9	8.34	8.68
	C10	0.86	0.89
	C11	0.00	0.00
Olefin	C4	0.00	0.00
	C5	0.00	0.00
	C6	0.00	0.00
	C7	0.00	0.00
	C8	0.00	0.00
	C9	0.00	0.00
	C10	0.00	0.00
	C11		
Naphthene	C4		
	C5	0.03	0.03
	C6	1.79	1.74
	C7	17.54	17.19
	C8	17.46	17.03
	C9	5.74	5.53
	C10	0.10	0.10
	C11	0.00	0.00

8210 Mosley Rd.
Houston, TX 77075
713-943-9776 Telephone
713-943-3846 Facsimile

CORE LABORATORIES

#14 200-300 **ASTM D-6623** **131169-7**

Aromatic	C4		
	C5		
	C6	0.12	0.10
	C7	5.18	4.48
	C8	8.69	7.52
	C9	0.72	0.62
	C10	0.00	0.00
	C11	0.01	0.01

The analytical results , opinions or interpretations contained in this report are based upon information and material supplied by the client for whose exclusive and confidential use this report has been made. The analytical results, opinions, or interpretations expressed represent the best judgement of Core Laboratories. Core Laboratories, however, makes no warranty or representation, expressed or implied, of any type, and expressly disclaims same as to the productivity, proper operations or profitableness of any oil, gas, coal, or other mineral property, well or sand in connection with such report is used or relied upon for any reason whatsoever. The report shall not be reproduced, in whole or in part, without the written approval of Core Laboratories.

8210 Mosley Rd.
Houston, TX 77075
713 943-9776 Telephone
713 943-3846 Facsimile

CORE LABORATORIES
DAKOTA

JOHN I FALKNER
FALKNER-RED RIVER LABS

1039 PEARL DRIVE
BOSSIER CITY, LA 71111

Sample Number: 131169-008
Sample Date:
Date Reported: 3/26/03
Date Received: 3/18/03
Sample ID: #14 300-350
Description:

Analytical Report

Test	Result	Units	Method	Date	Analyst
Capillary Gas Chromatography	Attached		ASTM D-5134 Mod	3/19/03	PKT
Naphthalenes in Jet Fuel	0.04	WT %	ASTM D-1840	3/20/03	KC
Nitrogen Total by Chemilum.	<1	ppm wt	ASTM D-4629	3/20/03	JT

Approved By: Jean Waits
Supervising Chemist

The analytical results, opinions or interpretations contained in this report are based upon information and material supplied by the client for whose exclusive and confidential use this report has been made. The analytical results, opinions or interpretations expressed represent the best judgment of Core Laboratories. Core Laboratories, however, makes no warranty or representation, express or implied, of any type, and expressly disclaims same as to the productivity, proper operations or profitableness of any oil, gas, coal or other mineral, property, well or sand in connection with which such report is used or relied upon for any reason whatsoever. This report shall not be reproduced, in whole or in part, without the written approval of Core Laboratories.

Core Lab
PETROLEUM SERVICES

8210 Mosley Rd.
Houston, TX 77075
713-943-9776 Telephone
713-943-3846 Facsimile

CORE LABORATORIES

14.300-350 **ASTM D-6623** **131169-8**

Component Name	WT %	LV %	Mol %
Propane	0.01	0.02	0.03
N-Butane	0.01	0.01	0.02
N-Heptane	0.03	0.03	0.04
Methylcyclohexane	0.10	0.10	0.13
1,1,3-Trimethylcyclopentane	0.01	0.01	0.01
2,5-Dimethylhexane	0.01	0.01	0.01
2,4-Dimethylhexane	0.01	0.01	0.01
Trans,cis-1,2,4-trimethylcyclopentane	0.02	0.02	0.02
Trans,cis-1,2,3-trimethylcyclopentane	0.02	0.02	0.02
Toluene	0.06	0.05	0.09
2,3-Dimethylhexane	0.01	0.01	0.01
2-Methylheptane	0.07	0.08	0.08
4-Methylheptane	0.02	0.02	0.02
Cis-1,3 dimethylcyclohexane	0.09	0.09	0.11
3-Methylheptane	0.06	0.07	0.07
Trans-1,4-dimethylcyclohexane	0.04	0.04	0.05
1,1-Dimethylcyclohexane	0.01	0.01	0.01
Trans-1,2,dimethylcyclohexane	0.05	0.05	0.06
N-Octane	0.19	0.21	0.22
2,2-Dimethylheptane	0.01	0.01	0.01
Cis-1,2-dimethylcyclohexane	0.02	0.02	0.02
2,4-Dimethylheptane	0.04	0.04	0.04
Ethylcyclohexane	0.30	0.29	0.35
Cis,cis,1-3-5,trimethylcyclohexane	0.01	0.01	0.01
2,6-Dimethylheptane	0.09	0.10	0.09
1,1,3-Trimethylcyclohexane	0.38	0.38	0.40
C9 Naphthenes	5.30	5.23	5.54
2,5-Dimethylheptane	0.10	0.11	0.10
3,5-Dimethylheptane	0.04	0.04	0.04
Ethylbenzene	0.07	0.06	0.09
Trans,trans,1,2,4-trimethylcyclohexane	0.87	0.87	0.91
Cis,trans,1,3,5-trimethylcyclohexane	0.05	0.05	0.05
Meta-Xylene	0.83	0.74	1.03
Para-Xylene	0.23	0.21	0.29
2,3-Dimethylheptane	0.47	0.50	0.48
3,4-Dimethylheptane D/L	0.04	0.04	0.04
3,4-Dimethylheptane L/D	0.16	0.17	0.16
C9 Paraffins	3.14	3.31	3.23
4-Methyloctane	0.56	0.60	0.58
2-Methyloctane	0.82	0.89	0.84
Cis,cis,1,2,3,trimethylcyclohexane	0.10	0.10	0.10
3-Ethylheptane	0.51	0.55	0.52
3-Methyloctane	1.25	1.34	1.29

Core Lab
PETROLEUM SERVICES

8210 Mosley Rd.
Houston, TX 77075
713-943-9776 Telephone
713-943-3846 Facsimile

CORE LABORATORIES

#14 300-350 **ASTM D-6623** **131169-8**

Component Name	WT %	LV %	Mol %
Ortho-Xylene	0.92	0.81	1.14
Trans-1-Methyl-2-propylcyclopentane	0.08	0.08	0.08
Cis-1-ethyl-3-methylcyclohexane	0.37	0.36	0.39
Trans-1-ethyl-4-methylcyclohexane	2.25	2.17	2.35
Isobutylcyclopentane	1.61	1.59	1.68
2,2,6-Trimethylheptane	0.04	0.04	0.04
1-Ethyl-1-methylcyclohexane	0.12	0.12	0.13
Cis,trans,1,2,3,trimethylcyclohexane	0.28	0.28	0.29
Trans,trans,1,2,3,trimethylcyclohexane	0.24	0.23	0.25
N-Nonane	9.98	10.65	10.27
Trans-1-ethyl-3-methylcyclohexane	1.86	1.83	1.94
Trans-1-ethyl-2-methylcyclohexane	0.57	0.56	0.60
Cis-1-ethyl-4-methylcyclohexane	0.01	0.01	0.01
Isopropylbenzene	0.36	0.32	0.40
2,2-Dimethyloctane	1.70	1.81	1.58
Isopropylcyclohexane	0.71	0.68	0.74
Cis-1-ethyl-2-methylcyclohexane	0.32	0.31	0.33
2,4-Dimethyloctane	1.54	1.65	1.43
2,6-Dimethyloctane	3.40	3.60	3.15
2,5-Dimethyloctane	0.60	0.64	0.56
N-propylcyclohexane	3.71	3.60	3.88
N-butylcyclopentane	0.75	0.74	0.78
2,7-Dimethyloctane	0.36	0.39	0.33
n-Propylbenzene	0.70	0.63	0.77
3,6-Dimethyloctane	1.02	1.07	0.95
1-Methyl-3-ethylbenzene	2.39	2.13	2.62
1-Methyl-4-ethylbenzene	1.01	0.90	1.11
2,3-Dimethyloctane	0.86	0.90	0.80
1,3,5-Trimethylbenzene	2.15	1.91	2.36
4-Ethyloctane	0.31	0.33	0.29
5-Methylnonane	0.88	0.93	0.82
4-Methylnonane	1.89	1.99	1.75
1-Methyl-2-ethylbenzene	0.77	0.67	0.85
2-Methylnonane	2.07	2.19	1.92
3-Ethyloctane	0.60	0.63	0.56
1,2,3,5 Tet-methylcyclohexane	0.29	0.28	0.27
3-Methylnonane	2.38	2.50	2.21
1,2,3,4 Tet-methylcyclohexane	0.62	0.61	0.58
C10 Naphthenes	2.15	2.11	2.02
C10 Paraffin	1.00	1.03	0.84
1,2,4-Trimethylbenzene	5.36	4.72	5.88
Cis-1-methyl-3-propylcyclohexane	1.62	1.59	1.52
Trans 1,4 diethylcyclohexane	1.42	1.39	1.34

Core Lab
PETROLEUM SERVICES

8210 Mosley Rd.
Houston, TX 77075
713-943-9776 Telephone
713-943-3846 Facsimile

CORE LABORATORIES

#14,300-350 **ASTM D-6623** **131169-8**

Component Name	WT %	LV %	Mol %
Trans-1-methyl-3-propylcyclohexane	0.28	0.27	0.26
1-Ethyl-2,3-dimethylcyclohexane	0.24	0.24	0.23
Isobutylbenzene	0.14	0.13	0.14
Cis-1-methyl-4-propylcyclohexane	0.36	0.35	0.34
sec-Butylbenzene	0.45	0.40	0.44
N-Decane	9.50	10.03	8.81
1,2,3,4 Tet-methylcyclohexane	0.31	0.30	0.29
Trans 1,3 diethylcyclohexane	0.16	0.16	0.15
1,2,3-Trimethylbenzene	1.27	1.09	1.39
Trans 1,2 diethylcyclohexane	0.16	0.16	0.15
1-Methyl-3-isopropylbenzene	0.17	0.15	0.17
Cis 1,4 diethylcyclohexane	0.19	0.19	0.18
1-Methyl-4-isopropylbenzene	0.18	0.16	0.18
Indan (2,3-Dihydroindene)	0.11	0.09	0.12
Sec-butylcyclohexane	1.59	1.56	1.50
Butylcyclohexane	0.91	0.88	0.86
1,3-Diethylbenzene	0.09	0.08	0.09
C11 Naphthenes	0.89	0.86	0.76
1-Methyl-3-n-propylbenzene	0.46	0.41	0.45
1,4-Diethylbenzene	0.27	0.24	0.27
1,3-Dimethyl-5-ethylbenzene	0.33	0.29	0.32
1,2-Diethylbenzene	0.03	0.03	0.03
1-Methyl-2-n-propylbenzene	0.11	0.10	0.11
C11 Paraffins	1.20	1.24	1.01
4-Methyldecane	0.35	0.36	0.30
5-Methyldecane	0.22	0.23	0.19
1,4-Dimethyl-2-ethylbenzene	0.12	0.11	0.12
1,3-Dimethyl-4-ethylbenzene	0.11	0.10	0.11
3-Methyldecane	0.20	0.21	0.17
1,2-Dimethyl-4-ethylbenzene	0.15	0.13	0.15
1,3-Dimethyl-2-ethylbenzene	0.01	0.01	0.01
Tricyclodecane	0.13	0.13	0.13
1-Methylindan	0.01	0.01	0.01
1,2-Dimethyl-3-Ethylbenzene	0.02	0.02	0.02
N-Undecane	0.99	1.03	0.84
1,2,4,5-Tetramethylbenzene	0.03	0.03	0.03
1,2,3,5-Tetramethylbenzene	0.04	0.03	0.04
4-Methylindan	0.01	0.01	0.01
5-Methylindan	0.01	0.01	0.01
1,2,3,4-Tetramethylbenzene	0.03	0.03	0.03
6-Methylundecane	0.04	0.04	0.03
4-Methylundecane	0.02	0.02	0.02
Naphthalene	0.02	0.02	0.02

8210 Mosley Rd.
Houston, TX 77075
713-943-9776 Telephone
713-943-3846 Facsimile

CORE LABORATORIES

#14 300-350 **ASTM D-6623** **131169-8**

Component Name	WT %	LV %	Mol %
C11 Aromatic	0.15	0.13	0.13
N-Dodecane	0.09	0.09	0.07
Dodecanes	0.24	0.21	0.20
2-Methylnaphthalene	0.01	0.01	0.01
Tridecanes	0.01	0.01	0.01
N-Tridecane	0.02	0.02	0.01
Tetradecanes	0.02	0.02	0.01
Pentadecanes	0.01	0.01	0.01
Hexadecanes	0.01	0.01	0.01
Heptadecanes	0.01	0.01	0.01
Octadecanes	0.01	0.01	0.01
Eicosanes	0.01	0.01	0.00
Heneicosanes	0.01	0.01	0.00
Docosanes	0.01	0.01	0.00
	100.00	100.00	100.00

Mol WT of Sample	131.95
Mol WT C6 Plus	131.99
Density of Sample	0.7749
Density C6 Plus	0.7749

Summary by Group

Totals

Group	%Wt	% Vol
Paraffin	20.70	21.96
Isoparaf.	28.07	29.68
Olefin	0.00	0.00
Naphthene	31.57	30.93
Aromatic	19.18	16.97
Oxygenates		
Unidentified	0.48	0.46

Core Lab
PETROLEUM SERVICES

8210 Mosley Rd.
Houston, TX 77075
713-943-9776 Telephone
713-943-3846 Facsimile

CORE LABORATORIES

#14 300-350 **ASTM D-6623** **131169-8**

Summary by Carbon

Totals

Group	%Wt	% Vol
C4	0.01	0.01
C5	0.00	0.00
C6	0.00	0.00
C7	0.19	0.18
C8	2.98	2.78
C9	50.92	50.01
C10	41.37	42.45
C11	4.05	4.11

Composite by Carbon

Group	C#	%Wt	% Vol
Paraffin	C4	0.01	0.01
	C5	0.00	0.00
	C6	0.00	0.00
	C7	0.03	0.03
	C8	0.19	0.21
	C9	9.98	10.65
	C10	9.50	10.03
	C11	0.99	1.03
Isoparaf.	C4	0.00	0.00
	C5	0.00	0.00
	C6	0.00	0.00
	C7	0.00	0.00
	C8	0.18	0.20
	C9	7.23	7.70
	C10	18.65	19.70
	C11	2.01	2.08
Olefin	C4	0.00	0.00
	C5	0.00	0.00
	C6	0.00	0.00
	C7	0.00	0.00
	C8	0.00	0.00
	C9	0.00	0.00
	C10	0.00	0.00
	C11		

Core Lab
PETROLEUM SERVICES

8210 Mosley Rd.
Houston, TX 77075
713-943-9776 Telephone
713-943-3846 Facsimile

CORE LABORATORIES

#14300-350 **ASTM D-6623** **131169-8**

Naphthene	C4		
	C5	0.00	0.00
	C6	0.00	0.00
	C7	0.10	0.10
	C8	0.56	0.55
	C9	19.59	19.20
	C10	10.43	10.22
	C11	0.89	0.86
Aromatic	C4		
	C5		
	C6	0.00	0.00
	C7	0.06	0.05
	C8	2.05	1.82
	C9	14.12	12.46
	C10	2.79	2.50
	C11	0.16	0.14

The analytical results , opinions or interpretations contained in this report are based upon information and material supplied by the client for whose exclusive and confidential use this report has been made. The analytical results, opinions, or interpretations expressed represent the best judgement of Core Laboratories. Core Laboratories, however, makes no warranty or representation, expressed or implied, of any type, and expressly disclaims same as to the productivity, proper operations or profitableness of any oil, gas, coal, or other mineral property, well or sand in connection with such report is used or relied upon for any reason whatsoever. The report shall not be reproduced, in whole or in part, without the written approval of Core Laboratories.

8210 Mosley Rd.
Houston, TX 77075
713-943-9776 Telephone
713-943-3846 Facsimile

CORE LABORATORIES

Sample # 14 (350-500) **ASTM D-6623** **131514-8**

Component Name	WT %	LV %	Mol %
Propane	0.01	0.02	0.04
Isobutylene	0.01	0.01	0.03
N-Butane	0.01	0.01	0.03
Isopentane	0.01	0.01	0.02
1-Pentene	0.01	0.01	0.02
N-Pentane	0.01	0.01	0.02
2-Methylpentane	0.01	0.01	0.02
1-Hexene	0.01	0.01	0.02
N-Hexane	0.01	0.01	0.02
1-Heptene	0.01	0.01	0.02
N-Heptane	0.02	0.02	0.03
Methylcyclohexane	0.01	0.01	0.02
2-Methylheptane	0.01	0.01	0.01
3-Methylheptane	0.01	0.01	0.01
1-Octene	0.01	0.01	0.02
N-Octane	0.02	0.02	0.03
Ethylcyclohexane	0.01	0.01	0.02
1,1,3-Trimethylcyclohexane	0.01	0.01	0.01
C9 Naphthenes	0.01	0.01	0.01
Trans,trans,1,2,4-trimethylcyclohexane	0.01	0.01	0.01
Meta-Xylene	0.01	0.01	0.02
2,3-Dimethylheptane	0.01	0.01	0.01
4-Methyloctane	0.01	0.01	0.01
2-Methyloctane	0.01	0.01	0.01
3-Methyloctane	0.02	0.02	0.03
Ortho-Xylene	0.01	0.01	0.02
Trans-1-ethyl-4-methylcyclohexane	0.03	0.03	0.04
1-Nonene	0.01	0.01	0.01
Isobutylcyclopentane	0.02	0.02	0.03
N-Nonane	0.10	0.11	0.13
Trans-1-ethyl-3-methylcyclohexane	0.02	0.02	0.03
Trans-1-ethyl-2-methylcyclohexane	0.01	0.01	0.01
2,2-Dimethyloctane	0.01	0.01	0.01
Isopropylcyclohexane	0.02	0.02	0.03
2,4-Dimethyloctane	0.02	0.02	0.02
2,6-Dimethyloctane	0.05	0.06	0.06
2,5-Dimethyloctane	0.01	0.01	0.01
N-propylcyclohexane	0.04	0.04	0.05
N-butylcyclopentane	0.01	0.01	0.01
2,7-Dimethyloctane	0.01	0.01	0.01
n-Propylbenzene	0.04	0.04	0.06
3,6-Dimethyloctane	0.02	0.02	0.02
1-Methyl-3-ethylbenzene	0.05	0.05	0.07

Core Lab
PETROLEUM SERVICES

8210 Mosley Rd.
Houston, TX 77075
713-943-9776 Telephone
713-943-3846 Facsimile

CORE LABORATORIES

Sample #14 (350-500) **ASTM D-6623** **131514-8**

Component Name	WT %	LV %	Mol %
1-Methyl-4-ethylbenzene	0.05	0.05	0.07
2,3-Dimethyloctane	0.07	0.08	0.08
1,3,5-Trimethylbenzene	0.10	0.09	0.14
4-Ethyloctane	0.02	0.02	0.02
5-Methylnonane	0.03	0.03	0.04
4-Methylnonane	0.07	0.08	0.08
1-Methyl-2-ethylbenzene	0.05	0.05	0.07
2-Methylnonane	0.07	0.08	0.08
3-Ethyloctane	0.04	0.04	0.05
1,2,3,5 Tet-methylcyclohexane	0.03	0.03	0.04
3-Methylnonane	0.16	0.18	0.19
1,2,3,4 Tet-methylcyclohexane	0.01	0.01	0.01
1,4 Dimethyl-2-ethylcyclohexane	0.08	0.08	0.10
C10 Naphthenes	0.14	0.14	0.17
C10 Paraffin	0.03	0.03	0.03
1,2,4-Trimethylbenzene	0.37	0.34	0.53
Cis-1-methyl-3-propylcyclohexane	0.25	0.26	0.30
Trans 1,4 diethylcyclohexane	0.23	0.24	0.28
Trans-1-methyl-3-propylcyclohexane	0.04	0.04	0.05
1-Ethyl-2,3-dimethylcyclohexane	0.04	0.04	0.05
Isobutylbenzene	0.14	0.13	0.18
Cis-1-methyl-4-propylcyclohexane	0.08	0.08	0.10
N-Decane	1.87	2.06	2.24
1,2,3,4 Tet-methylcyclohexane	0.09	0.09	0.11
Trans 1,3 diethylcyclohexane	0.06	0.06	0.07
1,2,3-Trimethylbenzene	0.26	0.23	0.37
Trans 1,2 diethylcyclohexane	0.08	0.08	0.10
1-Methyl-3-isopropylbenzene	0.10	0.09	0.13
Cis 1,4 diethylcyclohexane	0.07	0.07	0.09
1-Methyl-4-isopropylbenzene	0.12	0.11	0.15
Indan (2,3-Dihydroindene)	0.16	0.13	0.23
Sec-butylcyclohexane	0.89	0.91	1.08
Butylcyclohexane	0.82	0.83	1.00
1,3-Diethylbenzene	0.28	0.26	0.36
C11 Naphthenes	0.69	0.69	0.76
1-Methyl-3-n-propylbenzene	0.41	0.38	0.52
1,4-Diethylbenzene	0.31	0.29	0.39
1,3-Dimethyl-5-ethylbenzene	0.33	0.31	0.42
1,2-Diethylbenzene	0.17	0.16	0.22
1-Methyl-2-n-propylbenzene	0.19	0.18	0.24
Cis 1-methyl 4-ter-butylcyclohexane	0.44	0.44	0.49
4-Methyldecane	0.70	0.76	0.76
5-Methyldecane	0.37	0.40	0.40

8210 Mosley Rd.
Houston, TX 77075
713-943-9776 Telephone
713-943-3846 Facsimile

CORE LABORATORIES

Sample # 14 (350-500) **ASTM D-6623** **131514-8**

Component Name	WT %	LV %	Mol %
1,4-Dimethyl-2-ethylbenzene	0.76	0.70	0.97
1,3-Dimethyl-4-ethylbenzene	0.41	0.38	0.52
3-Methyldecane	0.47	0.51	0.51
C11 Paraffins	0.18	0.19	0.20
1,2-Dimethyl-4-ethylbenzene	0.41	0.38	0.52
1,3-Dimethyl-2-ethylbenzene	0.18	0.16	0.23
Tricyclodecane	0.56	0.56	0.70
1,2-Dimethyl-3-Ethylbenzene	0.34	0.31	0.43
N-Undecane	5.07	5.52	5.53
1,2,4,5-Tetramethylbenzene	0.30	0.27	0.38
1,2,3,5-Tetramethylbenzene	0.51	0.46	0.65
C11 Unidentified	1.73	1.75	1.83
4-Methylindan	0.45	0.38	0.58
5-Methylindan	0.37	0.31	0.48
1,2,3,4-Tetramethylbenzene	0.48	0.43	0.61
Tetralin	0.02	0.02	0.03
6-Methylundecane	0.61	0.66	0.61
5-Methylundecane	0.45	0.49	0.45
Pentylbenzene	0.09	0.08	0.10
Naphthalene	0.51	0.41	0.68
3-Methylundecane	0.24	0.26	0.24
C11 Aromatic	7.41	6.90	8.53
N-Dodecane	5.39	5.79	5.40
Dodecanes	6.87	6.42	7.22
Tridecanes	12.01	11.99	11.71
N-Tridecane	5.96	6.34	5.52
Tetradecanes	14.23	14.02	12.78
N-Tetradecane	5.55	5.85	4.77
Pentadecanes	10.28	10.00	8.51
N-Pentadecane	2.74	2.87	2.20
Hexadecanes	2.55	2.46	1.96
N-Hexadecane	0.57	0.60	0.43
Heptadecanes	0.56	0.54	0.40
N-Heptadecane	0.15	0.16	0.11
Octadecanes	0.15	0.14	0.10
N-Octadecane	0.04	0.04	0.03
Nonadecanes	0.02	0.02	0.01
N-Nonadecane	0.02	0.02	0.01
Eicosanes	0.01	0.01	0.01
Unidentified	0.08	0.16	0.15
	100.00	100.00	100.00

8210 Mosley Rd.
Houston, TX 77075
713-943-9776 Telephone
713-943-3846 Facsimile

CORE LABORATORIES

Sample # 14 (350-500) **ASTM D-6623** **131514-8**

Mol WT of Sample	170.62
Mol WT C6 Plus	170.81
Density of Sample	0.8097
Density C6 Plus	0.8099
RON	0.9
MON	0.6

Summary by Group

Totals	**Group**	**%Wt**	**% Vol**
	Paraffin	7.11	7.76
	Isoparaf.	3.03	3.28
	Olefin	0.06	0.06
	Naphthene	4.60	4.85
	Aromatic	15.39	14.10
	Oxygenates		
	Unidentified	69.61	69.95

Summary by Carbon

Totals	**Group**	**%Wt**	**% Vol**
	C4	0.02	0.02
	C5	0.03	0.03
	C6	0.03	0.03
	C7	0.04	0.04
	C8	0.08	0.08
	C9	1.42	1.33
	C10	12.74	12.37
	C11	16.03	16.15

Composite by Carbon

Group	**C#**	**%Wt**	**% Vol**
Paraffin	C4	0.01	0.01
	C5	0.01	0.01
	C6	0.01	0.01
	C7	0.02	0.02
	C8	0.02	0.02
	C9	0.10	0.11
	C10	1.87	2.06
	C11	5.07	5.52

Core Lab
PETROLEUM SERVICES

8210 Mosley Rd.
Houston, TX 77075
713-943-9776 Telephone
713-943-3846 Facsimile

CORE LABORATORIES

Sample # 14 (350-500) **ASTM D-6623** **131514-8**

Isoparaf.	C4	0.00	0.00
	C5	0.01	0.01
	C6	0.01	0.01
	C7	0.00	0.00
	C8	0.02	0.02
	C9	0.05	0.05
	C10	0.61	0.67
	C11	2.33	2.52
Olefin	C4	0.01	0.01
	C5	0.01	0.01
	C6	0.01	0.01
	C7	0.01	0.01
	C8	0.01	0.01
	C9	0.01	0.01
	C10	0.00	0.00
	C11		
Naphthene	C4		
	C5	0.00	0.00
	C6	0.00	0.00
	C7	0.01	0.01
	C8	0.01	0.01
	C9	0.18	0.18
	C10	3.47	3.52
	C11	1.13	1.13
Aromatic	C4		
	C5		
	C6	0.00	0.00
	C7	0.00	0.00
	C8	0.02	0.02
	C9	1.08	0.98
	C10	6.79	6.12
	C11	7.50	6.98

The analytical results , opinions or interpretations contained in this report are based upon information and material supplied by the client for whose exclusive and confidential use this report has been made. The analytical results, opinions, or interpretations expressed represent the best judgement of Core Laboratories. Core Laboratories, however, makes no warranty or representation, expressed or implied, of any type, and expressly disclaims same as to the productivity, proper operations or profitableness of any oil, gas, coal, or other mineral property, well or sand in connection with such report is used or relied upon for any reason whatsoever. The report shall not be reproduced, in whole or in part, without the written approval of Core Laboratories.

8210 Mosley Rd.
Houston, TX 77075
713 943-9776 Telephone
713 943-3846 Facsimile

CORE LABORATORIES

RICHARD MOSHER
FALKNER-RED RIVER LABS

1039 PEARL DRIVE
BOSSIER CITY, LA 71111

Date Reported: 4/22/03
Date Received: 4/10/03

Analytical Report

Test	Result	Units	Method	Date	Analyst
Sample Number: 131514-009	**Sample ID:**	**Sample # 14 (500-650)**			**Sample Rcvd:**
Sample Date:	**Description:**				**4/10/03**
Capillary Gas Chromatography	Attached		ASTM D-5134 Mod	4/11/03	PKT
Sample Number: 131514-010	**Sample ID:**	**Sample # 1 (350-End)**			**Sample Rcvd:**
Sample Date:	**Description:**				**4/10/03**
Capillary Gas Chromatography	Attached		ASTM D-5134 Mod	4/11/03	PKT

Approved By: JWaits
Jan Waits
Supervising Chemist

The analytical results, opinions or interpretations contained in this report are based upon information and material supplied by the client for whose exclusive and confidential use this report has been made. The analytical results, opinions or interpretations expressed represent the best judgment of Core Laboratories. Core Laboratories, however, makes no warranty or representation, express or implied, of any type, and expressly disclaims same as to the productivity, proper operations or profitableness of any oil, gas, coal, or other mineral, property, well or sand in connection with which such report is used or relied upon for any reason whatsoever. This report shall not be reproduced, in whole or in part, without the written approval of Core Laboratories.

8210 Mosley Rd.
Houston, TX 77075
713-943-9776 Telephone
713-943-3846 Facsimile

CORE LABORATORIES

Sample # 14 (500-650) **ASTM D-6623** **131514-9**

Component Name	WT %	LV %	Mol %
Ethane	0.04	0.09	0.28
Propane	0.28	0.45	1.32
Isobutane	0.03	0.04	0.11
Isobutylene	0.29	0.40	1.08
N-Butane	0.36	0.51	1.29
Trans-2-butene	0.04	0.05	0.15
Cis-2-butene	0.03	0.04	0.11
3-Methyl-1-butene	0.04	0.05	0.12
Isopentane	0.15	0.20	0.43
1-Pentene	0.26	0.33	0.77
2-Methyl-1-butene	0.11	0.14	0.33
N-Pentane	0.41	0.53	1.18
2-methyl-1,3-butadiene	0.01	0.01	0.03
Trans-2-pentene	0.04	0.05	0.12
Cis-2-pentene	0.02	0.02	0.06
2-Methyl-2-butene	0.07	0.09	0.21
Trans-1,3-pentadiene	0.01	0.01	0.03
Cis-1,3-pentadiene	0.01	0.01	0.03
Cyclopentene	0.03	0.03	0.09
4-Methyl-1-pentene	0.09	0.11	0.22
3-Methyl-1-pentene	0.03	0.04	0.07
Cyclopentane	0.04	0.04	0.12
2,3-Dimethylbutane	0.03	0.04	0.07
2-Methylpentane	0.12	0.15	0.29
3-Methylpentane	0.07	0.09	0.17
1-Hexene	0.43	0.52	1.06
N-Hexane	0.40	0.49	0.97
Trans-3-hexene	0.01	0.01	0.02
Trans-2-hexene	0.03	0.04	0.07
2-Methyl-2-pentene	0.03	0.04	0.07
4-Methylcyclopentene	0.04	0.04	0.10
3-Methylcyclopentene	0.01	0.01	0.03
Cis-2-hexene	0.01	0.01	0.02
3-Methyl-trans-2-pentene	0.02	0.02	0.05
Methylcyclopentane	0.09	0.10	0.22
2,4-Dimethylpentane	0.01	0.01	0.02
2,3-Dimethyl-2-butene	0.01	0.01	0.02
2,3,3-Trimethyl-1-butene	0.02	0.02	0.04
2,2,3-Trimethylbutane	0.01	0.01	0.02
3,4-Dimethyl-1-pentene	0.01	0.01	0.02
4,4-Dimethyl-cis-2-pentene	0.01	0.01	0.02
2,4-Dimethyl-1-pentene	0.03	0.03	0.06
1-Methylcyclopentene	0.09	0.09	0.23

8210 Mosley Rd.
Houston, TX 77075
713-943-9776 Telephone
713-943-3846 Facsimile

CORE LABORATORIES

Sample # 14 (500-650) **ASTM D-6623** **131514-9**

Component Name	WT %	LV %	Mol %
3-Methyl-1-hexene	0.03	0.04	0.06
5-Methyl-1-hexene	0.02	0.02	0.04
Cyclohexane	0.05	0.05	0.12
4-Methyl-1-hexene	0.02	0.02	0.04
4-Methyl-trans-2-hexene	0.10	0.12	0.21
4-Methyl-cis-2-hexene	0.01	0.01	0.02
2-Methylhexane	0.05	0.06	0.10
2,3-Dimethylpentane	0.02	0.02	0.04
Cyclohexene	0.31	0.31	0.79
3-Methylhexane	0.08	0.09	0.17
Cis-1,3-dimethylcyclopentane	0.02	0.02	0.04
Trans-1,3-dimethylcyclopentane	0.01	0.01	0.02
3-Ethylpentane	0.06	0.07	0.12
Trans-1,2-dimethylcyclopentane	0.03	0.03	0.06
1-Heptene	0.36	0.42	0.76
Trans-3-heptene	0.04	0.05	0.08
N-Heptane	0.50	0.60	1.04
Cis-3-heptene	0.01	0.01	0.02
3-Methyl-trans-3-hexene	0.06	0.07	0.13
3-Ethyl-2-pentene	0.04	0.05	0.08
3-Methyl-trans-2-hexene	0.05	0.06	0.11
2,3-dimethyl-2-pentene	0.01	0.01	0.02
Methylcyclohexane	0.13	0.14	0.28
Ethylcyclopentane	0.05	0.05	0.11
2,5-Dimethylhexane	0.02	0.02	0.04
2,4-Dimethylhexane	0.05	0.06	0.09
Trans,cis-1,2,4-trimethylcyclopentane	0.01	0.01	0.02
Trans,cis-1,2,3-trimethylcyclopentane	0.01	0.01	0.02
Toluene	0.04	0.04	0.09
2,3-Dimethylhexane	0.01	0.01	0.02
2-Methyl-3-Ethylpentane	0.01	0.01	0.02
2-Methylheptane	0.18	0.21	0.33
4-Methylheptane	0.05	0.06	0.09
3-Methylheptane	0.08	0.09	0.15
3-Ethylhexane	0.02	0.02	0.04
Trans-1,4-dimethylcyclohexane	0.01	0.01	0.02
1,1-Dimethylcyclohexane	0.01	0.01	0.02
Cis-1-ethyl-3-methylcyclopentane	0.02	0.02	0.04
1-Octene	0.36	0.41	0.67
Trans-4-octene	0.01	0.01	0.02
Trans-3-octene	0.02	0.02	0.04
N-Octane	0.49	0.57	0.89
Trans-2-Octene	0.03	0.03	0.06

8210 Mosley Rd.
Houston, TX 77075
713-943-9776 Telephone
713-943-3846 Facsimile

CORE LABORATORIES

Sample # 14 (500-650) **ASTM D-6623** **131514-9**

Component Name	WT %	LV %	Mol %
Cis-2-Octene	0.03	0.03	0.06
Isopropylcyclopentane	0.01	0.01	0.02
Cis-1,2-dimethylcyclohexane	0.01	0.01	0.02
Ethylcyclohexane	0.10	0.10	0.19
2,6-Dimethylheptane	0.03	0.03	0.05
1,1,3-Trimethylcyclohexane	0.05	0.05	0.08
C9 Naphthenes	0.12	0.13	0.20
2,5-Dimethylheptane	0.04	0.05	0.06
Octenes	0.79	0.89	1.46
Ethylbenzene	0.02	0.02	0.04
Cis,trans,1,3,5-trimethylcyclohexane	0.02	0.02	0.03
Meta-Xylene	0.06	0.06	0.12
Para-Xylene	0.02	0.02	0.04
2,3-Dimethylheptane	0.05	0.06	0.08
3,4-Dimethylheptane D/L	0.02	0.02	0.03
4-Methyloctane	0.03	0.03	0.05
2-Methyloctane	0.03	0.03	0.05
3-Methyloctane	0.15	0.17	0.24
Ortho-Xylene	0.05	0.05	0.10
Cis-1-ethyl-3-methylcyclohexane	0.11	0.11	0.18
1-Nonene	0.36	0.38	0.59
Isobutylcyclopentane	0.02	0.02	0.03
Trans,trans,1,2,3,trimethylcyclohexane	0.02	0.02	0.03
N-Nonane	0.46	0.52	0.75
Trans-1-ethyl-3-methylcyclohexane	0.05	0.05	0.08
Trans-1-ethyl-2-methylcyclohexane	0.02	0.02	0.03
2,2-Dimethyloctane	0.01	0.01	0.01
Isopropylcyclohexane	0.04	0.04	0.07
2,4-Dimethyloctane	0.03	0.03	0.04
2,6-Dimethyloctane	0.11	0.12	0.16
2,5-Dimethyloctane	0.01	0.01	0.01
N-propylcyclohexane	0.06	0.06	0.10
N-butylcyclopentane	0.05	0.05	0.08
2,7-Dimethyloctane	0.03	0.03	0.04
3,6-Dimethyloctane	0.03	0.03	0.04
1-Methyl-3-ethylbenzene	0.03	0.03	0.05
1-Methyl-4-ethylbenzene	0.02	0.02	0.03
2,3-Dimethyloctane	0.10	0.11	0.15
1,3,5-Trimethylbenzene	0.03	0.03	0.05
4-Ethyloctane	0.02	0.02	0.03
5-Methylnonane	0.02	0.02	0.03
4-Methylnonane	0.06	0.07	0.09
1-Methyl-2-ethylbenzene	0.03	0.03	0.05

8210 Mosley Rd.
Houston, TX 77075
713-943-9776 Telephone
713-943-3846 Facsimile

CORE LABORATORIES

Sample # 14 (500-650) **ASTM D-6623** **131514-9**

Component Name	WT %	LV %	Mol %
2-Methylnonane	0.03	0.03	0.04
3-Ethyloctane	0.02	0.02	0.03
3-Methylnonane	0.09	0.10	0.13
C10 Naphthenes	0.06	0.06	0.09
C10 Paraffin	0.03	0.03	0.04
1,2,4-Trimethylbenzene	0.05	0.05	0.09
Cis-1-methyl-3-propylcyclohexane	0.02	0.02	0.03
Cis 1,3 diethylcyclohexane	0.06	0.06	0.09
Trans 1,4 diethylcyclohexane	0.03	0.03	0.04
Trans-1-methyl-3-propylcyclohexane	0.01	0.01	0.01
Isobutylbenzene	0.04	0.04	0.06
N-Decane	0.49	0.55	0.72
1,2,3-Trimethylbenzene	0.05	0.05	0.09
Trans 1,2 diethylcyclohexane	0.03	0.03	0.04
1-Methyl-3-isopropylbenzene	0.01	0.01	0.02
Indan (2,3-Dihydroindene)	0.03	0.03	0.05
Sec-butylcyclohexane	0.07	0.07	0.10
Butylcyclohexane	0.07	0.07	0.10
1,3-Diethylbenzene	0.01	0.01	0.02
C11 Naphthenes	0.17	0.17	0.23
1-Methyl-4-n-propylbenzene	0.01	0.01	0.02
1,4-Diethylbenzene	0.06	0.06	0.09
1,3-Dimethyl-5-ethylbenzene	0.03	0.03	0.05
1,2-Diethylbenzene	0.02	0.02	0.03
1-Methyl-2-n-propylbenzene	0.03	0.03	0.05
Cis 1-methyl 4-ter-butylcyclohexane	0.03	0.03	0.04
4-Methyldecane	0.04	0.04	0.05
5-Methyldecane	0.03	0.03	0.04
1,4-Dimethyl-2-ethylbenzene	0.05	0.05	0.08
1,3-Dimethyl-4-ethylbenzene	0.03	0.03	0.05
3-Methyldecane	0.04	0.04	0.05
C11 Paraffins	0.02	0.02	0.03
1,2-Dimethyl-4-ethylbenzene	0.03	0.03	0.05
1,3-Dimethyl-2-ethylbenzene	0.01	0.01	0.02
Tricyclodecane	0.05	0.05	0.08
1,2-Dimethyl-3-Ethylbenzene	0.04	0.04	0.06
N-Undecane	0.55	0.61	0.73
1,2,4,5-Tetramethylbenzene	0.02	0.02	0.03
1,2,3,5-Tetramethylbenzene	0.01	0.01	0.02
C11 Unidentified	0.68	0.70	0.88
4-Methylindan	0.08	0.07	0.13
5-Methylindan	0.07	0.06	0.11
1,2,3,4-Tetramethylbenzene	0.03	0.03	0.05

8210 Mosley Rd.
Houston, TX 77075
713-943-9776 Telephone
713-943-3846 Facsimile

CORE LABORATORIES

Sample # 14 (500-650) **ASTM D-6623** **131514-9**

Component Name	WT %	LV %	Mol %
5-Methylundecane	0.03	0.03	0.04
Naphthalene	0.05	0.04	0.08
3-Methylundecane	0.01	0.01	0.01
C11 Aromatic	0.50	0.47	0.70
N-Dodecane	0.56	0.61	0.68
Dodecanes	1.00	0.95	1.28
Tridecanes	1.35	1.36	1.60
N-Tridecane	0.64	0.69	0.72
Tetradecanes	1.91	1.91	2.09
N-Tetradecane	0.98	1.05	1.03
Pentadecanes	3.59	3.54	3.63
N-Pentadecane	1.74	1.85	1.70
Hexadecanes	5.16	5.04	4.84
N-Hexadecane	2.16	2.29	1.98
Heptadecanes	6.19	5.99	5.43
N-Heptadecane	2.55	2.69	2.21
Octadecanes	7.52	7.24	6.09
N-Octadecane	2.55	2.69	2.01
Nonadecanes	7.31	6.99	5.78
N-Nonadecane	2.69	2.81	2.08
Eicosanes	6.97	6.63	5.27
N-Eicosane	2.72	2.83	2.02
Heneicosanes	8.45	7.99	6.08
Docosanes	7.49	7.04	5.14
Tricosanes	5.70	5.33	3.74
Tetracosanes	2.95	2.75	1.85
Pentacosanes	0.87	0.81	0.52
Hexacosanes	0.34	0.31	0.20
Heptacosanes	0.07	0.06	0.04
Octacosanes Plus	1.00	0.92	0.54
Unidentified	0.91	1.07	1.37
	100.00	100.00	100.00

Mol WT of Sample	208.04
Mol WT C6 Plus	219.51
Density of Sample	0.8199
Density C6 Plus	0.8266

RON	5.7
MON	5.2

8210 Mosley Rd.
Houston, TX 77075
713-943-9776 Telephone
713-943-3846 Facsimile

CORE LABORATORIES

Sample # 14 (500-650) **ASTM D-6623** **131514-9**

Summary by Group

Totals

Group	%Wt	% Vol
Paraffin	3.66	4.38
Isoparaf.	2.12	2.41
Olefin	4.49	5.20
Naphthene	1.76	1.79
Aromatic	1.56	1.50
Oxygenates		
Unidentified	86.41	84.72

Summary by Carbon

Totals

Group	%Wt	% Vol
C4	0.75	1.04
C5	1.20	1.51
C6	1.85	2.15
C7	1.85	2.12
C8	2.48	2.77
C9	1.97	2.10
C10	2.11	2.18
C11	1.38	1.41

Composite by Carbon

Group	C#	%Wt	% Vol
Paraffin	C4	0.36	0.51
	C5	0.41	0.53
	C6	0.40	0.49
	C7	0.50	0.60
	C8	0.49	0.57
	C9	0.46	0.52
	C10	0.49	0.55
	C11	0.55	0.61
Isoparaf.	C4	0.03	0.04
	C5	0.15	0.20
	C6	0.22	0.28
	C7	0.23	0.26
	C8	0.42	0.48
	C9	0.35	0.39
	C10	0.59	0.63
	C11	0.13	0.13

8210 Mosley Rd.
Houston, TX 77075
713-943-9776 Telephone
713-943-3846 Facsimile

CORE LABORATORIES

Sample # 14 (500-650) **ASTM D-6623** **131514-9**

Olefin	C4	0.36	0.49
	C5	0.60	0.74
	C6	1.09	1.23
	C7	0.84	0.97
	C8	1.24	1.39
	C9	0.36	0.38
	C10	0.00	0.00
	C11		
Naphthene	C4		
	C5	0.04	0.04
	C6	0.14	0.15
	C7	0.24	0.25
	C8	0.18	0.18
	C9	0.56	0.57
	C10	0.40	0.40
	C11	0.20	0.20
Aromatic	C4		
	C5		
	C6	0.00	0.00
	C7	0.04	0.04
	C8	0.15	0.15
	C9	0.24	0.24
	C10	0.63	0.60
	C11	0.50	0.47

The analytical results , opinions or interpretations contained in this report are based upon information and material supplied by the client for whose exclusive and confidential use this report has been made. The analytical results, opinions, or interpretations expressed represent the best judgement of Core Laboratories. Core Laboratories, however, makes no warranty or representation, expressed or implied, of any type, and expressly disclaims same as to the productivity, proper operations or profitableness of any oil, gas, coal, or other mineral property, 'l or sand in connection with such report is used or relied upon for any reason whatsoever. The report shall not be reproduced, in whole ı part, without the written approval of Core Laboratories.

8210 Mosley Rd.
Houston, TX 77075
713 943-9776 Telephone
713 943-3846 Facsimile

CORE LABORATORIES

JOHN I FALKNER
FALKNER-RED RIVER LABS

1039 PEARL DRIVE
BOSSIER CITY, LA 71111

Date Reported: 5/30/03
Date Received: 5/19/03

Analytical Report

Test	Result	Units	Method	Date	Analyst
Sample Number: 132072-003		**Sample ID: Sample #14 Crude**			**Sample Rcvd:**
Sample Date:		**Description:**			**5/19/03**
Simulated Distillation-Distillates					
IBP	24	Deg F	ASTM D-2887	5/29/03	DM
5 % off	154	Deg F			
10 % off	209	Deg F			
15 % off	242	Deg F			
20 % off	281	Deg F			
25 % off	319	Deg F			
30 % off	357	Deg F			
35 % off	406	Deg F			
40 % off	449	Deg F			
45 % off	489	Deg F			
50 % off	526	Deg F			
55 % off	572	Deg F			
60 % off	606	Deg F			
65 % off	651	Deg F			
70 % off	697	Deg F			
75 % off	749	Deg F			
80 % off	800	Deg F			
85 % off	855	Deg F			
90 % off	918	Deg F			
95 % off	987	Deg F			
FBP	1077	Deg F			

Approved By: Jean Waits
Supervising Chemist

The analytical results, opinions or interpretations contained in this report are based upon information and material supplied by the client for whose exclusive and confidential use this report has been made. The analytical results, opinions or interpretations expressed represent the best judgment of Core Laboratories. Core Laboratories, however, makes no warranty or representation, express or implied, of any type, and expressly disclaims same as to the productivity, proper operations or profitableness of any oil, gas, coal, or other mineral, property, well or sand in connection with which such report is used or relied upon for any reason whatsoever. This report shall not be reproduced, in whole or in part, without the written approval of Core Laboratories.

	Oil Last 12 Mos	% of Total	BPD
Total	2024044		5867
GALLUP /SD/ SH/	914000	45.2%	2649
MESAVERDE	468365	23.1%	1358
PICTURED CLIFFS	14276	0.7%	41
SANASTEE	3477	0.2%	10
DAKOTA	420308	20.8%	1218
CHACRA	3276	0.2%	9
MANCOS	200342	9.9%	581

Production by Distance from Site						
Distance	<10	10 - 20	20 - 30	30 - 40	40 - 50	>50
Production	610	2025	1893	748	465	126

Jicarilla Oil

BBL

Jet Gasoline

	Oil Last 12 Mos	% of Total	BPD	
Total	1383531		4010	
GALLUP /SD/ SH/	689655	49.8%	1999	1060
MESAVERDE	177208	12.8%	514	411
PICTURED CLIFFS	14276	1.0%	41	
SANASTEE	3477	0.3%	10	
DAKOTA	296226	21.4%	859	816
CHACRA	2347	0.2%	7	
MANCOS	200342	14.5%	581	174
				2401

Production Less Than 10 Miles		
Total	610	
GALLUP /SD/ SH/	455	74.5%
MESAVERDE	21	3.4%
PICTURED CLIFFS	6	1.0%
SANASTEE	10	1.7%
DAKOTA	110	18.0%
CHACRA	0	0.0%
MANCOS	8	1.3%

Production Less Than 20 Miles		
Total	2635	
GALLUP /SD/ SH/	2049	77.8%
MESAVERDE	83	3.2%
PICTURED CLIFFS	6	0.2%
SANASTEE	10	0.4%
DAKOTA	412	15.6%
CHACRA	4	0.1%
MANCOS	70	2.6%

Production Less Than 30 Miles		
Total	4528	
GALLUP /SD/ SH/	2626	58.0%
MESAVERDE	507	11.2%
PICTURED CLIFFS	41	0.9%
SANASTEE	10	0.2%
DAKOTA	824	18.2%
CHACRA	7	0.2%
MANCOS	514	11.3%

Production Less Than 40 Miles		
Total	5276	
GALLUP /SD/ SH/	2648	50.2%
MESAVERDE	842	16.0%
PICTURED CLIFFS	41	0.8%
SANASTEE	10	0.2%
DAKOTA	1147	21.7%
CHACRA	9	0.2%
MANCOS	579	11.0%

Production Less Than 50 Miles		
Total	5741	
GALLUP /SD/ SH/	2649	46.1%
MESAVERDE	1233	21.5%
PICTURED CLIFFS	41	0.7%
SANASTEE	10	0.2%
DAKOTA	1218	21.2%
CHACRA	9	0.2%
MANCOS	581	10.1%

	Oil Last 12 Mos	% of Total	BPD
Total	1383531		4010
GALLUP /SD/ SH/	689655	49.8%	1999
MESAVERDE	177208	12.8%	514
PICTURED CLIFFS	14276	1.0%	41
SANASTEE	3477	0.3%	10
DAKOTA	296226	21.4%	859
CHACRA	2347	0.2%	7
MANCOS	200342	14.5%	581

Production Less Than 10 Miles		
Total	610	
GALLUP /SD/ SH/	455	74.5%
MESAVERDE	21	3.4%
PICTURED CLIFFS	6	1.0%
SANASTEE	10	1.7%
DAKOTA	110	18.0%
CHACRA	0	0.0%
MANCOS	8	1.3%

Production Less Than 20 Miles		
Total	2635	
GALLUP /SD/ SH/	2049	77.8%
MESAVERDE	83	3.2%
PICTURED CLIFFS	6	0.2%
SANASTEE	10	0.4%
DAKOTA	412	15.6%
CHACRA	4	0.1%
MANCOS	70	2.6%

Production 10 - 20 Miles		
Total	2025	
GALLUP /SD/ SH/	1594	79%
MESAVERDE	62	3%
PICTURED CLIFFS	0	0%
SANASTEE	0	0%
DAKOTA	302	15%
CHACRA	4	0%
MANCOS	62	3%

Production Less Than 30 Miles		
Total	4528	
GALLUP /SD/ SH/	2626	58.0%
MESAVERDE	507	11.2%
PICTURED CLIFFS	41	0.9%
SANASTEE	10	0.2%
DAKOTA	824	18.2%
CHACRA	7	0.2%
MANCOS	514	11.3%

Production 20 - 30 Miles		
Total	1893	
GALLUP /SD/ SH/	576	30%
MESAVERDE	424	22%
PICTURED CLIFFS	35	2%
SANASTEE	0	0%
DAKOTA	412	22%
CHACRA	3	0%
MANCOS	444	23%

Production Less Than 40 Miles		
Total	5276	
GALLUP /SD/ SH/	2648	50.2%
MESAVERDE	842	16.0%
PICTURED CLIFFS	41	0.8%
SANASTEE	10	0.2%
DAKOTA	1147	21.7%
CHACRA	9	0.2%
MANCOS	579	11.0%

Production 30 - 40 Miles		
Total	748	
GALLUP /SD/ SH/	22	3%
MESAVERDE	334	45%
PICTURED CLIFFS	0	0%
SANASTEE	0	0%
DAKOTA	323	43%
CHACRA	2	0%
MANCOS	66	9%

Production Less Than 50 Miles		
Total	5741	
GALLUP /SD/ SH/	2649	46.1%
MESAVERDE	1233	21.5%
PICTURED CLIFFS	41	0.7%
SANASTEE	10	0.2%
DAKOTA	1218	21.2%
CHACRA	9	0.2%
MANCOS	581	10.1%

Production 40 - 50 Miles		
Total	465.0	
GALLUP /SD/ SH/	1.4	0%
MESAVERDE	391.0	84%
PICTURED CLIFFS	0.0	0%
SANASTEE	0.0	0%
DAKOTA	70.6	15%
CHACRA	0.7	0%
MANCOS	1.2	0%

JAECO Crude Unit
Preliminary Design
Basis Case 205-J001

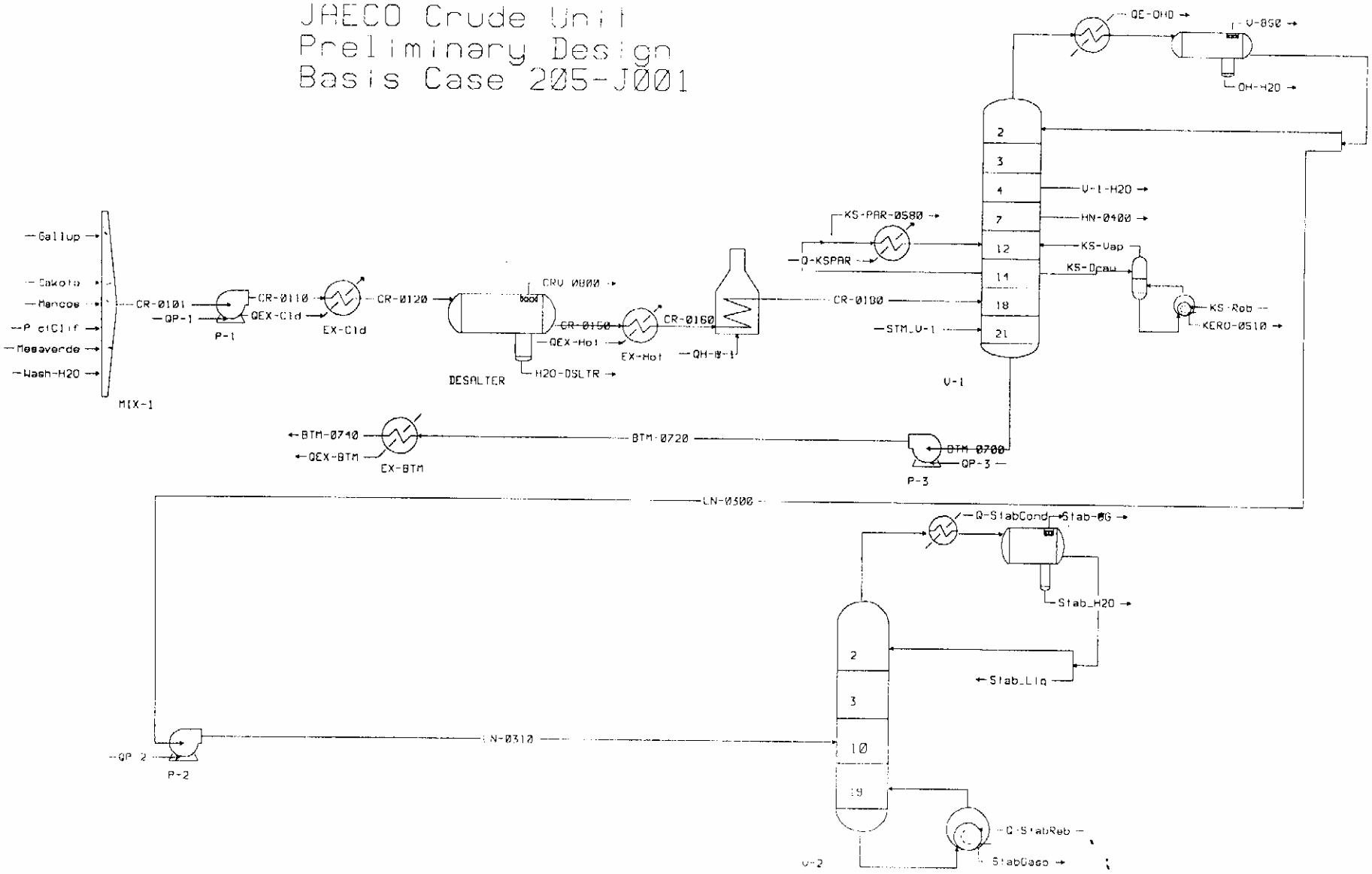

Hyprotech's Process Simulator HYSIM - Licensed to JS Plunkett & Associates
Date 2003/11/18 Version STD|C2.72 Case Name 205-J001.SIM
Time 14:10:39 Prop Pkg PR

Stream Summary

*** Feed ***

Stream Name		JAECO_Blnd	Gallup	Dakota	Mancos
Vapour_Frac		---	---	---	---
Temperature	F	60.0000	60.0000	60.0000	60.0000
Pressure	psia	---	---	---	---
Flow	lbmole/hr	448.0344	196.6905	78.3316	32.8266
Mass_Flow	lb/hr	68200.3750	31189.6992	14560.1348	7317.7139
LiqVol_Flow	barrel/day	5847.0000	2653.2725	1206.9597	589.9357
Mole_Weight		152.2213	158.5725	185.8782	222.9205
Energy	Btu/hr	---	---	---	---
Molar_Enthal	Btu/lbmole	---	---	---	---
Entropy	Btu/lbmole-F	---	---	---	---
Mass_Cp	Btu/lb-F	---	---	---	---
Mass_Density	lb/ft3	---	---	---	---
Std_Density	API_60	---	---	---	---
Z_Factor		---	---	---	---

*** Vapour ***

Flow	lbmole/hr	---	---	---	---
Mass_Flow	lb/hr	---	---	---	---
Std_Gas_Flow	MMSCFD	---	---	---	---
Act_Gas_Flow	ACFM	---	---	---	---
Mole_Weight		---	---	---	---
Energy	Btu/hr	---	---	---	---
Molar_Enthal	Btu/lbmole	---	---	---	---
Entropy	Btu/lbmole-F	---	---	---	---
Mass_Cp	Btu/lb-F	---	---	---	---
Mass_Density	lb/ft3	---	---	---	---
Air_SG	rel_to_air	---	---	---	---
Z_Factor		---	---	---	---
Thermal_Cond	Btu/hr-ft-F	---	---	---	---
Viscosity	cP	---	---	---	---

*** Light Liquid ***

Flow	lbmole/hr	---	---	---	---
Mass_Flow	lb/hr	---	---	---	---
LiqVol_Flow	barrel/day	---	---	---	---
Volume_Flow	USGPM	---	---	---	---
Mole_Weight		---	---	---	---
Energy	Btu/hr	---	---	---	---
Molar_Enthal	Btu/lbmole	---	---	---	---
Entropy	Btu/lbmole-F	---	---	---	---
Mass_Cp	Btu/lb-F	---	---	---	---
Mass_Density	lb/ft3	---	---	---	---
Mass_Density	SG_H2O60api	---	---	---	---
Std_Density	SG_60/60api	---	---	---	---
UOPK_(dry)		---	---	---	---
Z_Factor		---	---	---	---
Thermal_Cond	Btu/hr-ft-F	---	---	---	---
Viscosity	cP	---	---	---	---

*** Heavy Liquid ***

Flow	lbmole/hr	---	---	---	---
Mass_Flow	lb/hr	---	---	---	---
LiqVol_Flow	barrel/day	---	---	---	---

Hyprotech's Process Simulator HYSIM - Licensed to JS Plunkett & Associates
Date 2003/11/18 Version STD|C2.72 Case Name 205-J001.SIM
Time 14:10:40 Prop Pkg PR

Stream Summary

*** Feed ***

Stream Name		PictClif	Mesaverde	Wash-H2O	CR-0101
Vapour_Frac		---	---	---	0.0000
Temperature	F	60.0000	60.0000	60.0000	75.0000
Pressure	psia	---	---	---	14.0000
Flow	lbmole/hr	2.5924	137.6711	242.7117	690.8239
Mass_Flow	lb/hr	508.9725	14623.8564	4372.4761	72572.8516
LiqVol_Flow	barrel/day	41.9627	1355.0693	300.0000	6147.2002
Mole_Weight		196.3297	106.2231	18.0151	105.0526
Energy	Btu/hr	---	---	---	-7.24181E+06
Molar_Enthal	Btu/lbmole	---	---	---	-10482.7627
Entropy	Btu/lbmole-F	---	---	---	30.9223
Mass_Cp	Btu/lb-F	---	---	---	0.4900
Mass_Density	lb/ft3	---	---	---	50.1020
Std_Density	API_60	---	---	---	43.0471
Z_Factor		---	---	---	---

*** Vapour ***

Flow	lbmole/hr	---	---	---	0.0000
Mass_Flow	lb/hr	---	---	---	0.0000
Std_Gas_Flow	MMSCFD	---	---	---	0.0000
Act_Gas_Flow	ACFM	---	---	---	0.0000
Mole_Weight		---	---	---	---
Energy	Btu/hr	---	---	---	0.0000
Molar_Enthal	Btu/lbmole	---	---	---	---
Entropy	Btu/lbmole-F	---	---	---	---
Mass_Cp	Btu/lb-F	---	---	---	---
Mass_Density	lb/ft3	---	---	---	---
Air_SG	rel_to_air	---	---	---	---
Z_Factor		---	---	---	---
Thermal_Cond	Btu/hr-ft-F	---	---	---	---
Viscosity	cP	---	---	---	---

*** Light Liquid ***

Flow	lbmole/hr	---	---	---	448.3106
Mass_Flow	lb/hr	---	---	---	68203.9531
LiqVol_Flow	barrel/day	---	---	---	5847.4448
Volume_Flow	USGPM	---	---	---	171.9400
Mole_Weight		---	---	---	152.1355
Energy	Btu/hr	---	---	---	-3.63487E+06
Molar_Enthal	Btu/lbmole	---	---	---	-8107.8667
Entropy	Btu/lbmole-F	---	---	---	40.7485
Mass_Cp	Btu/lb-F	---	---	---	0.4554
Mass_Density	lb/ft3	---	---	---	49.4558
Mass_Density	SG_H2O60api	---	---	---	0.7938
Std_Density	SG_60/60api	---	---	---	0.8003
UOPK_(dry)		---	---	---	11.7588
Z_Factor		---	---	---	0.0075
Thermal_Cond	Btu/hr-ft-F	---	---	---	0.0767
Viscosity	cP	---	---	---	1.7440

*** Heavy Liquid ***

Flow	lbmole/hr	---	---	---	242.5133
Mass_Flow	lb/hr	---	---	---	4368.9019
LiqVol_Flow	barrel/day	---	---	---	299.7548

Hyprotech's Process Simulator HYSIM - Licensed to JS Plunkett & Associates
Date 2003/11/18 Version STD|C2.72 Case Name 205-J001.SIM
Time 14:10:40 Prop Pkg PR

Stream Summary

*** Feed ***

Stream Name		CR-0110	CR-0120	CR-0150	CRV-0800
Vapour_Frac		0.0000	0.0000	0.0000	1.0000
Temperature	F	75.3302	225.0000	225.0000	225.0000
Pressure	psia	110.0000	85.0000	85.0000	85.0000
Flow	lbmole/hr	690.8239	690.8239	452.5370	0.0000
Mass_Flow	lb/hr	72572.8516	72572.8516	68280.0938	0.0000
LiqVol_Flow	barrel/day	6147.2002	6147.2002	5852.6689	0.0000
Mole_Weight		105.0526	105.0526	150.8829	51.6462
Energy	Btu/hr	-7.20750E+06	-1.35337E+06	1.52164E+06	0.0000
Molar_Enthal	Btu/lbmole	-10433.0967	-1959.0519	3362.4368	9489.5762
Entropy	Btu/lbmole-F	30.9401	44.8704	59.3474	45.0345
Mass_Cp	Btu/lb-F	0.4900	0.5779	0.5479	0.4804
Mass_Density	lb/ft3	50.1554	45.9295	45.3057	0.6455
Std_Density	API_60	43.0471	42.9490	45.1646	60.3710
Z_Factor		---	---	0.0385	0.9256

*** Vapour ***

Flow	lbmole/hr	0.0000	0.0000	0.0000	0.0000
Mass_Flow	lb/hr	0.0000	0.0000	0.0000	0.0000
Std_Gas_Flow	MMSCFD	0.0000	0.0000	0.0000	0.0000
Act_Gas_Flow	ACFM	0.0000	0.0000	0.0000	0.0000
Mole_Weight		---	---	---	51.6462
Energy	Btu/hr	0.0000	0.0000	0.0000	0.0000
Molar_Enthal	Btu/lbmole	---	---	---	9489.5762
Entropy	Btu/lbmole-F	---	---	---	45.0345
Mass_Cp	Btu/lb-F	---	---	---	0.4804
Mass_Density	lb/ft3	---	---	---	0.6455
Air_SG	rel_to_air	---	---	---	1.7831
Z_Factor		---	---	---	0.9256
Thermal_Cond	Btu/hr-ft-F	---	---	---	0.0131
Viscosity	cP	---	---	---	0.0099

*** Light Liquid ***

Flow	lbmole/hr	448.3114	452.5370	452.5370	0.0000
Mass_Flow	lb/hr	68203.9609	68280.0938	68280.0938	0.0000
LiqVol_Flow	barrel/day	5847.4463	5852.6689	5852.6689	0.0000
Volume_Flow	USGPM	171.7480	187.8996	187.8996	0.0000
Mole_Weight		152.1353	150.8829	150.8829	---
Energy	Btu/hr	-3.60324E+06	1.52164E+06	1.52164E+06	0.0000
Molar_Enthal	Btu/lbmole	-8037.2856	3362.4368	3362.4368	2084.4463
Entropy	Btu/lbmole-F	40.7709	59.3474	59.3474	32.6941
Mass_Cp	Btu/lb-F	0.4554	0.5479	0.5479	0.5973
Mass_Density	lb/ft3	49.5111	45.3057	45.3057	38.4381
Mass_Density	SG_H2O60api	0.7947	0.7272	0.7272	0.6170
Std_Density	SG_60/60api	0.8003	0.8010	0.8010	0.7062
UOPK_(dry)		11.7588	11.7588	11.7588	12.1633
Z_Factor		0.0589	0.0385	0.0385	0.0271
Thermal_Cond	Btu/hr-ft-F	0.0767	0.0662	0.0662	0.0548
Viscosity	cP	1.7397	0.5140	0.5140	0.1789

*** Heavy Liquid ***

Flow	lbmole/hr	242.5126	238.2869	0.0000	0.0000
Mass_Flow	lb/hr	4368.8882	4292.7622	0.0000	0.0000
LiqVol_Flow	barrel/day	299.7538	294.5308	0.0000	0.0000

Hyprotech's Process Simulator HYSIM - Licensed to JS Plunkett & Associates
Date 2003/11/18 Version STD|C2.72 Case Name 205-J001.SIM
Time 14:10:40 Prop Pkg PR

Stream Summary

*** Feed ***		CR-0160	CR-0180	V-850	LN-0300
Stream Name					
Vapour_Frac		0.2280	0.7973	1.0000	0.0000
Temperature	F	365.0000	500.0000	101.9012	101.9012
Pressure	psia	60.0000	45.0000	30.0000	30.0000
Flow	lbmole/hr	452.5370	452.5370	0.1000	42.4731
Mass_Flow	lb/hr	68280.0938	68280.0938	5.7959	3068.9963
LiqVol_Flow	barrel/day	5852.6689	5852.6689	0.6665	322.9583
Mole_Weight		150.8829	150.8829	57.9577	72.2574
Energy	Btu/hr	8.26692E+06	1.75449E+07	766.3913	-95227.3750
Molar_Enthal	Btu/lbmole	18267.7715	38769.7266	7663.7207	-2242.0410
Entropy	Btu/lbmole-F	78.9548	102.4143	40.5913	23.4575
Mass_Cp	Btu/lb-F	0.6161	0.6318	0.4193	0.5348
Mass_Density	lb/ft3	4.4637	0.8734	0.3037	38.9283
Std_Density	API_60	45.6692	45.9531	103.1821	86.6298
Z_Factor		---	---	0.9500	---

*** Vapour ***					
Flow	lbmole/hr	103.1603	360.7993	0.1000	0.0001
Mass_Flow	lb/hr	9650.0264	42281.8711	5.7959	0.0052
Std_Gas_Flow	MMSCFD	0.9395	3.2860	0.0009	0.0000
Act_Gas_Flow	ACFM	231.6238	1292.9103	0.3181	0.0003
Mole_Weight		93.5440	117.1895	57.9577	57.9579
Energy	Btu/hr	2.15917E+06	1.24830E+07	766.3913	0.6812
Molar_Enthal	Btu/lbmole	20930.1016	34597.9922	7663.7207	7663.7324
Entropy	Btu/lbmole-F	58.9442	80.2576	40.5913	40.5913
Mass_Cp	Btu/lb-F	0.5475	0.6062	0.4193	0.419
Mass_Density	lb/ft3	0.6944	0.5451	0.3037	0.303
Air_SG	rel_to_air	3.2297	4.0460	2.0010	2.001
Z_Factor		0.9133	0.9395	0.9500	0.950
Thermal_Cond	Btu/hr-ft-F	0.0153	0.0182	0.0098	0.009
Viscosity	cP	0.0097	0.0104	0.0079	0.007

*** Light Liquid ***					
Flow	lbmole/hr	349.3768	91.7377	0.0000	42.473
Mass_Flow	lb/hr	58630.0625	25998.2188	0.0000	3068.991
LiqVol_Flow	barrel/day	4936.2529	2032.9242	0.0000	322.957
Volume_Flow	USGPM	174.4793	75.3382	0.0000	9.827
Mole_Weight		167.8133	283.3972	72.2575	72.25
Energy	Btu/hr	6.10774E+06	5.06185E+06	0.0000	-95228.05
Molar_Enthal	Btu/lbmole	17481.6680	55176.9258	-2242.0637	-2242.06
Entropy	Btu/lbmole-F	84.8633	189.5555	23.4575	23.45
Mass_Cp	Btu/lb-F	0.6273	0.6735	0.5348	0.53
Mass_Density	lb/ft3	41.8949	43.0242	38.9366	38.93
Mass_Density	SG_H2O60api	0.6724	0.6906	0.6250	0.62
Std_Density	SG_60/60api	0.8127	0.8687	0.6487	0.64
UOPK_(dry)		11.7340	11.7824	12.6010	12.60
Z_Factor		0.0272	0.0288	0.0092	0.00
Thermal_Cond	Btu/hr-ft-F	0.0544	0.0559	0.0584	0.05
Viscosity	cP	0.2721	0.2379	0.1967	0.19

*** Heavy Liquid ***					
Flow	lbmole/hr	0.0000	0.0000	0.0000	0.0
Mass_Flow	lb/hr	0.0000	0.0000	0.0000	0.0
LiqVol_Flow	barrel/day	0.0000	0.0000	0.0000	0.0

Hyprotech's Process Simulator HYSIM - Licensed to JS Plunkett & Associates
Date 2003/11/18 Version STD|C2.72 Case Name 205-J001.SIM
Time 14:10:40 Prop Pkg PR

Stream Summary

*** Feed ***

Stream Name		LN-0310	HN-0400	KERO-0510	KS-Draw
Vapour_Frac		0.0000	0.0000	0.0000	0.0000
Temperature	F	102.7997	288.8157	475.9520	411.0511
Pressure	psia	145.0000	34.5000	39.7500	39.7500
Flow	lbmole/hr	42.4731	272.4286	32.3939	48.7389
Mass_Flow	lb/hr	3068.9963	30250.7715	5434.5303	7565.6494
LiqVol_Flow	barrel/day	322.9583	2765.2139	459.5701	647.8492
Mole_Weight		72.2574	111.0411	167.7638	155.2280
Energy	Btu/hr	-92990.3906	1.53206E+06	918353.8125	952705.0000
Molar_Enthal	Btu/lbmole	-2189.3733	5623.6567	28349.2715	19546.9082
Entropy	Btu/lbmole-F	23.4825	39.5234	88.6919	74.2649
Mass_Cp	Btu/lb-F	0.5341	0.6141	0.6945	0.6598
Mass_Density	lb/ft3	39.0094	39.4356	38.3398	39.6550
Std_Density	API_60	86.6298	58.0722	44.7054	46.4836
Z_Factor		0.0445	0.0121	---	0.0167

*** Vapour ***

Flow	lbmole/hr	0.0000	0.0000	0.0006	0.0000
Mass_Flow	lb/hr	0.0000	0.0000	0.0911	0.0000
Std_Gas_Flow	MMSCFD	0.0000	0.0000	0.0000	0.0000
Act_Gas_Flow	ACFM	0.0000	0.0000	0.0023	0.0000
Mole_Weight		---	95.8781	150.4888	---
Energy	Btu/hr	0.0000	0.0000	24.9900	0.0000
Molar_Enthal	Btu/lbmole	---	17600.7578	41276.6133	---
Entropy	Btu/lbmole-F	---	54.2550	95.0802	---
Mass_Cp	Btu/lb-F	---	0.5014	0.5897	---
Mass_Density	lb/ft3	---	0.4425	0.6590	---
Air_SG	rel_to_air	---	3.3103	5.1957	---
Z_Factor		---	0.9306	0.9041	---
Thermal_Cond	Btu/hr-ft-F	---	0.0125	0.0155	---
Viscosity	cP	---	0.0084	0.0088	---

*** Light Liquid ***

Flow	lbmole/hr	42.4731	272.4286	32.3933	48.7389
Mass_Flow	lb/hr	3068.9963	30250.7715	5434.4385	7565.6494
LiqVol_Flow	barrel/day	322.9583	2765.2139	459.5623	647.8492
Volume_Flow	USGPM	9.8087	95.6385	17.6552	23.7866
Mole_Weight		72.2574	111.0411	167.7641	155.2280
Energy	Btu/hr	-92990.3906	1.53206E+06	918328.8125	952705.0625
Molar_Enthal	Btu/lbmole	-2189.3733	5623.6567	28349.0293	19546.9082
Entropy	Btu/lbmole-F	23.4825	39.5234	88.6918	74.2649
Mass_Cp	Btu/lb-F	0.5341	0.6141	0.6945	0.6598
Mass_Density	lb/ft3	39.0094	39.4356	38.3766	39.6550
Mass_Density	SG_H2O60api	0.6261	0.6330	0.6160	0.6365
Std_Density	SG_60/60api	0.6487	0.7464	0.8030	0.7950
UOPK_(dry)		12.6010	11.9122	11.7901	11.7927
Z_Factor		0.0445	0.0121	0.0173	0.0167
Thermal_Cond	Btu/hr-ft-F	0.0583	0.0561	0.0521	0.0546
Viscosity	cP	0.1962	0.1935	0.1636	0.1921

*** Heavy Liquid ***

Flow	lbmole/hr	0.0000	0.0000	0.0000	0.0000
Mass_Flow	lb/hr	0.0000	0.0000	0.0000	0.0000
LiqVol_Flow	barrel/day	0.0000	0.0000	0.0000	0.0000

Hyprotech's Process Simulator HYSIM - Licensed to JS Plunkett & Associates
Date 2003/11/18 Version STD|C2.72 Case Name 205-J001.SIM
Time 14:10:41 Prop Pkg PR

Stream Summary

*** Feed ***

Stream Name		KS-Vap	KS-Reb	KS-PAR-0580	BTM-0700
Vapour_Frac		1.0000	---	0.0000	0.0000
Temperature	F	431.0751	---	411.0511	471.4557
Pressure	psia	39.7500	---	39.7500	45.0000
Flow	lbmole/hr	16.3450	---	139.1898	101.9916
Mass_Flow	lb/hr	2131.1191	---	21606.1699	29463.2559
LiqVol_Flow	barrel/day	188.2791	---	1850.1437	2300.3674
Mole_Weight		130.3836	---	155.2280	288.8791
Energy	Btu/hr	534338.6250	500000.0000	2.72075E+06	5.15577E+06
Molar_Enthal	Btu/lbmole	32690.9492	---	19546.9082	50550.4453
Entropy	Btu/lbmole-F	79.5624	---	74.2649	186.4864
Mass_Cp	Btu/lb-F	0.5700	---	0.6598	0.6577
Mass_Density	lb/ft3	0.5923	---	39.6550	44.0455
Std_Density	API_60	51.5923	---	46.4836	31.3563
Z_Factor		---	---	0.0167	0.0295

*** Vapour ***

Flow	lbmole/hr	16.3449	---	0.0000	0.0000
Mass_Flow	lb/hr	2131.1106	---	0.0000	0.0000
Std_Gas_Flow	MMSCFD	0.1489	---	0.0000	0.0000
Act_Gas_Flow	ACFM	59.9639	---	0.0000	0.0000
Mole_Weight		130.3835	---	---	---
Energy	Btu/hr	534337.4375	500000.0000	0.0000	0.0000
Molar_Enthal	Btu/lbmole	32690.9844	---	---	---
Entropy	Btu/lbmole-F	79.5624	---	---	---
Mass_Cp	Btu/lb-F	0.5700	---	---	---
Mass_Density	lb/ft3	0.5923	---	---	---
Air_SG	rel_to_air	4.5016	---	---	---
Z_Factor		0.9153	---	---	---
Thermal_Cond	Btu/hr-ft-F	0.0152	---	---	---
Viscosity	cP	0.0089	---	---	---

*** Light Liquid ***

Flow	lbmole/hr	0.0001	---	139.1898	101.9916
Mass_Flow	lb/hr	0.0085	---	21606.1699	29463.2559
LiqVol_Flow	barrel/day	0.0007	---	1850.1437	2300.3674
Volume_Flow	USGPM	0.0000	---	67.9304	83.3996
Mole_Weight		156.9832	---	155.2280	288.8791
Energy	Btu/hr	1.1861	---	2.72075E+06	5.15577E+06
Molar_Enthal	Btu/lbmole	21799.0293	---	19546.9082	50550.4453
Entropy	Btu/lbmole-F	77.1191	---	74.2649	186.4864
Mass_Cp	Btu/lb-F	0.6719	---	0.6598	0.6577
Mass_Density	lb/ft3	39.1178	---	39.6550	44.0455
Mass_Density	SG_H2O60api	0.6279	---	0.6365	0.7070
Std_Density	SG_60/60api	0.7957	---	0.7950	0.8689
UOPK_(dry)		11.7906	---	11.7927	11.8147
Z_Factor		0.0167	---	0.0167	0.0295
Thermal_Cond	Btu/hr-ft-F	0.0536	---	0.0546	0.0651
Viscosity	cP	0.1799	---	0.1921	0.2899

*** Heavy Liquid ***

Flow	lbmole/hr	0.0000	---	0.0000	0.0000
Mass_Flow	lb/hr	0.0000	---	0.0000	0.0000
LiqVol_Flow	barrel/day	0.0000	---	0.0000	0.0000

Hyprotech's Process Simulator HYSIM - Licensed to JS Plunkett & Associates
Date 2003/11/18 Version STD|C2.72 Case Name 205-J001.SIM
Time 14:10:41 Prop Pkg PR

Stream Summary

*** Feed ***

Stream Name		BTM-0720	BTM-0740	Stab_Liq	Stab-OG
Vapour_Frac		0.0000	0.0000	0.0000	0.9998
Temperature	F	471.5969	175.0000	127.6276	127.6276
Pressure	psia	75.0000	50.0000	115.0000	115.0000
Flow	lbmole/hr	101.9916	101.9916	10.0580	0.1000
Mass_Flow	lb/hr	29463.2559	29463.2559	556.4280	5.1860
LiqVol_Flow	barrel/day	2300.3674	2300.3674	66.0001	0.6343
Mole_Weight		288.8791	288.8791	55.3219	51.8590
Energy	Btu/hr	5.16072E+06	81487.1328	4768.1870	762.8631
Molar_Enthal	Btu/lbmole	50598.9922	798.9509	474.0644	7628.4233
Entropy	Btu/lbmole-F	186.4971	122.6924	21.2627	35.4217
Mass_Cp	Btu/lb-F	0.6575	0.4997	0.6303	0.4660
Mass_Density	lb/ft3	44.0875	51.4854	33.1442	1.1128
Std_Density	API_60	31.3563	31.3881	113.0209	118.0761
Z_Factor		0.0492	---	---	---

*** Vapour ***

Flow	lbmole/hr	0.0000	0.0000	0.0001	0.1000
Mass_Flow	lb/hr	0.0000	0.0000	0.0027	5.1852
Std_Gas_Flow	MMSCFD	0.0000	0.0000	0.0000	0.0009
Act_Gas_Flow	ACFM	0.0000	0.0000	0.0000	0.0777
Mole_Weight		---	---	51.8590	51.8593
Energy	Btu/hr	0.0000	0.0000	0.4024	762.8882
Molar_Enthal	Btu/lbmole	---	---	7629.8018	7629.8262
Entropy	Btu/lbmole-F	---	---	35.4241	35.4240
Mass_Cp	Btu/lb-F	---	---	0.4660	0.4660
Mass_Density	lb/ft3	---	---	1.1126	1.1126
Air_SG	rel_to_air	---	---	1.7905	1.7905
Z_Factor		---	---	0.8505	0.8505
Thermal_Cond	Btu/hr-ft-F	---	---	0.0117	0.0117
Viscosity	cP	---	---	0.0090	0.0090

*** Light Liquid ***

Flow	lbmole/hr	101.9916	101.3192	10.0579	0.0000
Mass_Flow	lb/hr	29463.2559	29451.1406	556.4252	0.0007
LiqVol_Flow	barrel/day	2300.3674	2299.5361	65.9997	0.0001
Volume_Flow	USGPM	83.3202	71.3228	2.0928	0.0000
Mole_Weight		288.8791	290.6769	55.3220	55.3218
Energy	Btu/hr	5.16072E+06	90236.1719	4767.7847	0.0061
Molar_Enthal	Btu/lbmole	50598.9922	890.6043	474.0268	474.0314
Entropy	Btu/lbmole-F	186.4971	123.4008	21.2626	21.2626
Mass_Cp	Btu/lb-F	0.6575	0.4995	0.6304	0.6304
Mass_Density	lb/ft3	44.0875	51.4823	33.1489	33.1488
Mass_Density	SG_H2O60api	0.7076	0.8263	0.5321	0.5321
Std_Density	SG_60/60api	0.8689	0.8686	0.5787	0.5787
UOPK_(dry)		11.8147	11.8147	13.4642	13.4642
Z_Factor		0.0492	0.0414	0.0305	0.0305
Thermal_Cond	Btu/hr-ft-F	0.0651	0.0845	0.0478	0.0478
Viscosity	cP	0.2899	3.7595	0.1170	0.1170

*** Heavy Liquid ***

Flow	lbmole/hr	0.0000	0.6725	0.0000	0.0000
Mass_Flow	lb/hr	0.0000	12.1150	0.0000	0.0000
LiqVol_Flow	barrel/day	0.0000	0.8312	0.0000	0.0000

Hyprotech's Process Simulator HYSIM - Licensed to JS Plunkett & Associates
Date 2003/11/18 Version STD|C2.72 Case Name 205-J001.SIM
Time 14:10:41 Prop Pkg PR

Stream Summary

*** Feed ***

Stream Name		StabGaso	QEX-Cld	QEX-Hot	QH-1
Vapour_Frac		0.0000	---	---	---
Temperature	F	262.2443	---	---	---
Pressure	psia	120.0000	---	---	---
Flow	lbmole/hr	32.2958	---	---	---
Mass_Flow	lb/hr	2507.0354	---	---	---
LiqVol_Flow	barrel/day	256.3001	---	---	---
Mole_Weight		77.6272	---	---	---
Energy	Btu/hr	147760.0156	5.85413E+06	6.74528E+06	9.27798E+06
Molar_Enthal	Btu/lbmole	4575.1582	---	---	---
Entropy	Btu/lbmole-F	34.8520	---	---	---
Mass_Cp	Btu/lb-F	0.6764	---	---	---
Mass_Density	lb/ft3	33.6313	---	---	---
Std_Density	API_60	81.2389	---	---	---
Z_Factor		0.0358	---	---	---

*** Vapour ***

Flow	lbmole/hr	0.0000	---	---	---
Mass_Flow	lb/hr	0.0000	---	---	---
Std_Gas_Flow	MMSCFD	0.0000	---	---	---
Act_Gas_Flow	ACFM	0.0000	---	---	---
Mole_Weight		---	---	---	---
Energy	Btu/hr	0.0000	5.85413E+06	6.74528E+06	9.27798E+06
Molar_Enthal	Btu/lbmole	---	---	---	---
Entropy	Btu/lbmole-F	---	---	---	---
Mass_Cp	Btu/lb-F	---	---	---	---
Mass_Density	lb/ft3	---	---	---	---
Air_SG	rel_to_air	---	---	---	---
Z_Factor		---	---	---	---
Thermal_Cond	Btu/hr-ft-F	---	---	---	---
Viscosity	cP	---	---	---	---

*** Light Liquid ***

Flow	lbmole/hr	32.2958	---	---	---
Mass_Flow	lb/hr	2507.0354	---	---	---
LiqVol_Flow	barrel/day	256.3001	---	---	---
Volume_Flow	USGPM	9.2940	---	---	---
Mole_Weight		77.6272	---	---	---
Energy	Btu/hr	147760.0156	---	---	---
Molar_Enthal	Btu/lbmole	4575.1582	---	---	---
Entropy	Btu/lbmole-F	34.8520	---	---	---
Mass_Cp	Btu/lb-F	0.6764	---	---	---
Mass_Density	lb/ft3	33.6313	---	---	---
Mass_Density	SG_H2O60api	0.5398	---	---	---
Std_Density	SG_60/60api	0.6651	---	---	---
UOPK_(dry)		12.4177	---	---	---
Z_Factor		0.0358	---	---	---
Thermal_Cond	Btu/hr-ft-F	0.0444	---	---	---
Viscosity	cP	0.1081	---	---	---

*** Heavy Liquid ***

Flow	lbmole/hr	0.0000	---	---	---
Mass_Flow	lb/hr	0.0000	---	---	---
LiqVol_Flow	barrel/day	0.0000	---	---	---

Hyprotech's Process Simulator HYSIM - Licensed to JS Plunkett & Associates
Date 2003/11/18 Version STD|C2.72 Case Name 205-J001.SIM
Time 14:10:41 Prop Pkg PR

Stream Summary

*** Feed ***

Stream Name		QE-OHD	Q-KSPAR	QEX-BTM	Q-StabCond
Vapour_Frac		---	---	---	---
Temperature	F	---	---	---	---
Pressure	psia	---	---	---	---
Flow	lbmole/hr	---	---	---	---
Mass_Flow	lb/hr	---	---	---	---
LiqVol_Flow	barrel/day	---	---	---	---
Mole_Weight		---	---	---	---
Energy	Btu/hr	8.91784E+06	-2.00000E+06	5.07923E+06	1.75399E+06
Molar_Enthal	Btu/lbmole	---	---	---	---
Entropy	Btu/lbmole-F	---	---	---	---
Mass_Cp	Btu/lb-F	---	---	---	---
Mass_Density	lb/ft3	---	---	---	---
Std_Density	API_60	---	---	---	---
Z_Factor		---	---	---	---

*** Vapour ***

Flow	lbmole/hr	---	---	---	---
Mass_Flow	lb/hr	---	---	---	---
Std_Gas_Flow	MMSCFD	---	---	---	---
Act_Gas_Flow	ACFM	---	---	---	---
Mole_Weight		---	---	---	---
Energy	Btu/hr	8.91784E+06	-2.00000E+06	5.07923E+06	1.75399E+06
Molar_Enthal	Btu/lbmole	---	---	---	---
Entropy	Btu/lbmole-F	---	---	---	---
Mass_Cp	Btu/lb-F	---	---	---	---
Mass_Density	lb/ft3	---	---	---	---
Air_SG	rel_to_air	---	---	---	---
Z_Factor		---	---	---	---
Thermal_Cond	Btu/hr-ft-F	---	---	---	---
Viscosity	cP	---	---	---	---

*** Light Liquid ***

Flow	lbmole/hr	---	---	---	---
Mass_Flow	lb/hr	---	---	---	---
LiqVol_Flow	barrel/day	---	---	---	---
Volume_Flow	USGPM	---	---	---	---
Mole_Weight		---	---	---	---
Energy	Btu/hr	---	---	---	---
Molar_Enthal	Btu/lbmole	---	---	---	---
Entropy	Btu/lbmole-F	---	---	---	---
Mass_Cp	Btu/lb-F	---	---	---	---
Mass_Density	lb/ft3	---	---	---	---
Mass_Density	SG_H2O60api	---	---	---	---
Std_Density	SG_60/60api	---	---	---	---
UOPK_(dry)		---	---	---	---
Z_Factor		---	---	---	---
Thermal_Cond	Btu/hr-ft-F	---	---	---	---
Viscosity	cP	---	---	---	---

*** Heavy Liquid ***

Flow	lbmole/hr	---	---	---	---
Mass_Flow	lb/hr	---	---	---	---
LiqVol_Flow	barrel/day	---	---	---	---

Hyprotech's Process Simulator HYSIM - Licensed to JS Plunkett & Associates
Date 2003/11/18 Version STD|C2.72 Case Name 205-J001.SIM
Time 14:10:42 Prop Pkg PR

Stream Summary

*** Feed ***

Stream Name		Q-StabReb	H2O-DSLTR	OH-H2O	V-1-H2O
Vapour_Frac		---	0.0000	0.0000	0.0000
Temperature	F	---	225.0000	101.9012	210.0869
Pressure	psia	---	85.0000	30.0000	32.2500
Flow	lbmole/hr	---	238.2869	19.8105	0.0000
Mass_Flow	lb/hr	---	4292.7622	356.8889	0.0000
LiqVol_Flow	barrel/day	---	294.5308	24.4865	0.0000
Mole_Weight		---	18.0151	18.0151	18.0151
Energy	Btu/hr	2.00000E+06	-2.87501E+06	-284737.4063	0.0000
Molar_Enthal	Btu/lbmole	---	-12065.2344	-14372.8789	-12350.1611
Entropy	Btu/lbmole-F	---	17.3768	13.6684	16.9612
Mass_Cp	Btu/lb-F	---	1.0544	1.0307	1.0497
Mass_Density	lb/ft3	---	58.8084	62.2352	59.2356
Std_Density	API_60	---	7.7075	7.7075	7.7075
Z_Factor		---	0.0035	0.0014	0.0014

*** Vapour ***

Flow	lbmole/hr	---	0.0000	0.0000	0.0000
Mass_Flow	lb/hr	---	0.0000	0.0000	0.0000
Std_Gas_Flow	MMSCFD	---	0.0000	0.0000	0.0000
Act_Gas_Flow	ACFM	---	0.0000	0.0000	0.0000
Mole_Weight		---	---	---	---
Energy	Btu/hr	2.00000E+06	0.0000	0.0000	0.0000
Molar_Enthal	Btu/lbmole	---	---	---	---
Entropy	Btu/lbmole-F	---	---	---	---
Mass_Cp	Btu/lb-F	---	---	---	---
Mass_Density	lb/ft3	---	---	---	---
Air_SG	rel_to_air	---	---	---	---
Z_Factor		---	---	---	---
Thermal_Cond	Btu/hr-ft-F	---	---	---	---
Viscosity	cP	---	---	---	---

*** Light Liquid ***

Flow	lbmole/hr	---	0.0000	0.0000	0.0000
Mass_Flow	lb/hr	---	0.0000	0.0000	0.0000
LiqVol_Flow	barrel/day	---	0.0000	0.0000	0.0000
Volume_Flow	USGPM	---	0.0000	0.0000	0.0000
Mole_Weight		---	---	---	---
Energy	Btu/hr	---	0.0000	0.0000	0.0000
Molar_Enthal	Btu/lbmole	---	---	---	---
Entropy	Btu/lbmole-F	---	---	---	---
Mass_Cp	Btu/lb-F	---	---	---	---
Mass_Density	lb/ft3	---	---	---	---
Mass_Density	SG_H2O60api	---	---	---	---
Std_Density	SG_60/60api	---	---	---	---
UOPK_(dry)		---	---	---	---
Z_Factor		---	---	---	---
Thermal_Cond	Btu/hr-ft-F	---	---	---	---
Viscosity	cP	---	---	---	---

*** Heavy Liquid ***

Flow	lbmole/hr	---	238.2869	19.8105	0.0000
Mass_Flow	lb/hr	---	4292.7622	356.8889	0.0000
LiqVol_Flow	barrel/day	---	294.5308	24.4865	0.0000

Hyprotech's Process Simulator HYSIM - Licensed to JS Plunkett & Associates
Date 2003/11/18 Version STD|C2.72 Case Name 205-J001.SIM
Time 14:10:42 Prop Pkg PR

Stream Summary

*** Feed ***

Stream Name		STM_V-1	Stab_H2O	QP-1	QP-2
Vapour_Frac		1.0000	0.0000	---	---
Temperature	F	307.6247	127.6276	---	---
Pressure	psia	75.0000	115.0000	---	---
Flow	lbmole/hr	16.6527	0.0192	---	---
Mass_Flow	lb/hr	300.0000	0.3466	---	---
LiqVol_Flow	barrel/day	20.5833	0.0238	---	---
Mole_Weight		18.0151	18.0151	---	---
Energy	Btu/hr	99912.2344	-267.2427	34310.3203	2236.9790
Molar_Enthal	Btu/lbmole	5999.7036	-13890.6719	---	---
Entropy	Btu/lbmole-F	41.0415	14.4986	---	---
Mass_Cp	Btu/lb-F	0.4726	1.0324	---	---
Mass_Density	lb/ft3	0.1694	61.5587	---	---
Std_Density	API_60	7.7075	7.7075	---	---
Z_Factor		0.9686	0.0053	---	---

*** Vapour ***

Flow	lbmole/hr	16.6527	0.0000	---	---
Mass_Flow	lb/hr	300.0000	0.0000	---	---
Std_Gas_Flow	MMSCFD	0.1517	0.0000	---	---
Act_Gas_Flow	ACFM	29.5151	0.0000	---	---
Mole_Weight		18.0151	---	---	---
Energy	Btu/hr	99912.2344	0.0000	34310.3203	2236.9790
Molar_Enthal	Btu/lbmole	5999.7036	7629.7012	---	---
Entropy	Btu/lbmole-F	41.0415	35.4239	---	---
Mass_Cp	Btu/lb-F	0.4726	0.4660	---	---
Mass_Density	lb/ft3	0.1694	1.1126	---	---
Air_SG	rel_to_air	0.6220	1.7905	---	---
Z_Factor		0.9686	0.8505	---	---
Thermal_Cond	Btu/hr-ft-F	0.0167	0.0117	---	---
Viscosity	cP	0.0140	0.0090	---	---

*** Light Liquid ***

Flow	lbmole/hr	0.0000	0.0000	---	---
Mass_Flow	lb/hr	0.0000	0.0000	---	---
LiqVol_Flow	barrel/day	0.0000	0.0000	---	---
Volume_Flow	USGPM	0.0000	0.0000	---	---
Mole_Weight		---	---	---	---
Energy	Btu/hr	0.0000	0.0000	---	---
Molar_Enthal	Btu/lbmole	---	---	---	---
Entropy	Btu/lbmole-F	---	---	---	---
Mass_Cp	Btu/lb-F	---	---	---	---
Mass_Density	lb/ft3	---	---	---	---
Mass_Density	SG_H2O60api	---	---	---	---
Std_Density	SG_60/60api	---	---	---	---
UOPK_(dry)		---	---	---	---
Z_Factor		---	---	---	---
Thermal_Cond	Btu/hr-ft-F	---	---	---	---
Viscosity	cP	---	---	---	---

*** Heavy Liquid ***

Flow	lbmole/hr	0.0000	0.0192	---	---
Mass_Flow	lb/hr	0.0000	0.3466	---	---
LiqVol_Flow	barrel/day	0.0000	0.0238	---	---

Hyprotech's Process Simulator HYSIM - Licensed to JS Plunkett & Associates
Date 2003/11/18 Version STD|C2.72 Case Name 205-J001.SIM
Time 14:10:42 Prop Pkg PR

Stream Summary

*** Feed ***

Stream Name		QP-3
Vapour_Frac		---
Temperature	F	---
Pressure	psia	---
Flow	lbmole/hr	---
Mass_Flow	lb/hr	---
LiqVol_Flow	barrel/day	---
Mole_Weight		---
Energy	Btu/hr	4951.5059
Molar_Enthal	Btu/lbmole	---
Entropy	Btu/lbmole-F	---
Mass_Cp	Btu/lb-F	---
Mass_Density	lb/ft3	---
Std_Density	API_60	---
Z_Factor		---

*** Vapour ***

Flow	lbmole/hr	---
Mass_Flow	lb/hr	---
Std_Gas_Flow	MMSCFD	---
Act_Gas_Flow	ACFM	---
Mole_Weight		---
Energy	Btu/hr	4951.5059
Molar_Enthal	Btu/lbmole	---
Entropy	Btu/lbmole-F	---
Mass_Cp	Btu/lb-F	---
Mass_Density	lb/ft3	---
Air_SG	rel_to_air	---
Z_Factor		---
Thermal_Cond	Btu/hr-ft-F	---
Viscosity	cP	---

*** Light Liquid ***

Flow	lbmole/hr	---
Mass_Flow	lb/hr	---
LiqVol_Flow	barrel/day	---
Volume_Flow	USGPM	---
Mole_Weight		---
Energy	Btu/hr	---
Molar_Enthal	Btu/lbmole	---
Entropy	Btu/lbmole-F	---
Mass_Cp	Btu/lb-F	---
Mass_Density	lb/ft3	---
Mass_Density	SG_H2O60api	---
Std_Density	SG_60/60api	---
UOPK_(dry)		---
Z_Factor		---
Thermal_Cond	Btu/hr-ft-F	---
Viscosity	cP	---

*** Heavy Liquid ***

Flow	lbmole/hr	---
Mass_Flow	lb/hr	---

Tabulated Cold Properties

	CR-0101	LN-0300	HN-0400
True VP @ 100 F (psia)	4.8364	29.1492	2.0681
Reid VP @ 100 F (psia)	3.4584	26.5340	---
ASTM D93 Flash Pt. (F)	40.7481	---	34.2220
ASTM D97 Pour Pt. (F)	-58.6938	---	-136.5715
Refractive Index	1.4449	1.3630	1.4146
Cetane Index	32.5713	---	---
Research Octane Number	65.3138	76.5893	47.4825
P/N/A (Mole %)	50.7/28.3/21.0	85.10/14.0/ 0.0	56.3/30.1/13.7
Visc @ 100 F (cP)	1.4136	0.1985	0.4691
Visc @ 210 F (cP)	0.5987	0.1208	0.2694
ASTM D86 10 % Pt. (F)	231.1563	65.1885	223.0823
ASTM D86 30 % Pt. (F)	278.9288	92.3709	244.7076
ASTM D86 50 % Pt. (F)	345.2585	122.2648	261.0430
ASTM D86 70 % Pt. (F)	523.8759	137.4284	282.7623
ASTM D86 90 % Pt. (F)	823.8400	158.7494	325.0005

	KERO-0510	BTM-0700	Stab_Liq
True VP @ 100 F (psia)	---	0.9743	79.6482
Reid VP @ 100 F (psia)	---	---	75.4439
ASTM D93 Flash Pt. (F)	148.7751	212.3991	---
ASTM D97 Pour Pt. (F)	-51.0085	54.8853	---
Refractive Index	1.4466	1.4801	1.3314
Cetane Index	51.1299	51.0609	---
Research Octane Number	31.5424	---	87.5090
P/N/A (Mole %)	47.1/30.2/22.7	88.5/11.5/ 0.0	33.3/33.3/33.3
Visc @ 100 F (cP)	1.1733	9.9453	0.1331
Visc @ 210 F (cP)	0.5481	2.3551	0.0781
ASTM D86 10 % Pt. (F)	377.1664	482.9411	2.1930
ASTM D86 30 % Pt. (F)	408.3618	565.8467	23.6189
ASTM D86 50 % Pt. (F)	423.8552	665.2443	33.2316
ASTM D86 70 % Pt. (F)	440.8393	796.6988	37.8040
ASTM D86 90 % Pt. (F)	472.0420	935.4109	41.9879

Tabulated Cold Properties

	StabGaso
True VP @ 100 F (psia)	13.2044
Reid VP @ 100 F (psia)	13.0189
ASTM D93 Flash Pt. (F)	---
ASTM D97 Pour Pt. (F)	---
Refractive Index	1.3713
Cetane Index	---
Research Octane Number	67.6572
P/N/A (Mole %)	81.6/18.4/ 0.0
Visc @ 100 F (cP)	0.2194
Visc @ 210 F (cP)	0.1344
ASTM D86 10 % Pt. (F)	100.6982
ASTM D86 30 % Pt. (F)	123.3481
ASTM D86 50 % Pt. (F)	135.0113
ASTM D86 70 % Pt. (F)	144.7447
ASTM D86 90 % Pt. (F)	165.3409

HYSIM COOLER / HEATER SPECIFICATION SHEET

HYSIM Version STD|C2.72
Case Name: E:\HYSIM\HS-205.PRJ\205-J001.SIM

Date 2003/11/18
Time 13:47:50

Operation Name: EX-Cld
Operation Note:

Phase Duties	Process Side	Total Duty
Vapour	0.0000 Btu/hr	5.85413E+06 Btu/hr
Two Phase	0.0000 Btu/hr	
Liquid	5.85413E+06 Btu/hr	

Inlet	Process Side	
Stream Name	CR-0110	
From Operation	P-1	
Mass Frac Vap	0.0000	
Temperature	75.3302 F	
Pressure	110.0000 psia	
Mass Flow	72572.8485 lb/hr	
Flow	690.8239 lbmole/hr	

Outlet	Process Side	
Stream Name	CR-0120	
To Operation	DESALTER	
Mass Frac Vap	0.0000	
Temperature	225.0000 F	
Pressure	85.0000 psia	

Fluid Properties	Process Side			
	Liquid		Vapour	
Reference Temp 1	75.3302	F	---	F
Reference Press 1	110.0000	psia	---	psia
Heat Capacity	0.4900	Btu/lb-F	---	Btu/lb-F
Viscosity	2.0676	cP	---	cP
Thermal Conductivity	0.0818	Btu/hr-ft-F	---	Btu/hr-ft-F
Density	50.1554	lb/ft3	---	lb/ft3
Molecular Weight	105.0526		---	
Z Factor			---	
Reference Temp 2	225.0000	F	---	F
Reference Press 2	85.0000	psia	---	psia
Heat Capacity	0.5779	Btu/lb-F	---	Btu/lb-F
Viscosity	0.6070	cP	---	cP
Thermal Conductivity	0.0711	Btu/hr-ft-F	---	Btu/hr-ft-F
Density	45.9295	lb/ft3	---	lb/ft3
Molecular Weight	105.0526		---	
Z Factor			---	

Duty Btu/hr	Process Heat Curve Temperature F	Mass Frac Vap
5.85413E+06	225.0000	0.0000
4.28574E+06	187.5825	0.0000
2.79056E+06	150.1651	0.0000
1.36324E+06	112.7476	0.0000
-1.5180	75.3302	0.0000

HYSIM COOLER / HEATER SPECIFICATION SHEET

HYSIM Version STD|C2.72
Case Name: E:\HYSIM\HS-205.PRJ\205-J001.SIM

Date 2003/11/18
Time 13:47:50

Operation Name: EX-Hot
Operation Note:

Phase Duties	Process Side	Total Duty
Vapour	0.0000 Btu/hr	6.74528E+06 Btu/hr
Two Phase	4.20112E+06 Btu/hr	
Liquid	2.54415E+06 Btu/hr	

Inlet	Process Side
Stream Name	CR-0150
From Operation	DESALTER
Mass Frac Vap	0.0000
Temperature	225.0000 F
Pressure	85.0000 psia
Mass Flow	68280.0918 lb/hr
Flow	452.5370 lbmole/hr

Outlet	Process Side
Stream Name	CR-0160
To Operation	H-1
Mass Frac Vap	0.1413
Temperature	365.0000 F
Pressure	60.0000 psia

Fluid Properties	Process Side	
	Liquid	Vapour
Reference Temp 1	225.0000 F	290.6455 F
Reference Press 1	85.0000 psia	65.6990 psia
Heat Capacity	0.5479 Btu/lb-F	0.5084 Btu/lb-F
Viscosity	0.5140 cP	0.0104 cP
Thermal Conductivity	0.0662 Btu/hr-ft-F	0.0145 Btu/hr-ft-F
Density	45.3057 lb/ft3	0.5299 lb/ft3
Molecular Weight	150.8829	61.2732
Z Factor		0.9434
Reference Temp 2	365.0000 F	365.0000 F
Reference Press 2	60.0000 psia	60.0000 psia
Heat Capacity	0.6273 Btu/lb-F	0.5475 Btu/lb-F
Viscosity	0.2721 cP	0.0097 cP
Thermal Conductivity	0.0544 Btu/hr-ft-F	0.0153 Btu/hr-ft-F
Density	41.8949 lb/ft3	0.6944 lb/ft3
Molecular Weight	167.8133	93.5440
Z Factor		0.9133

Duty Btu/hr	Process Heat Curve Temperature F	Mass Frac Vap
6.74528E+06	365.0000	0.1413
4.34126E+06	330.0000	0.0229
2.72068E+06	295.0000	0.0000
1.33424E+06	260.0000	0.0000
0.0498	225.0000	0.0000

HYSIM COOLER / HEATER SPECIFICATION SHEET

HYSIM Version STD|C2.72
Case Name: E:\HYSIM\HS-205.PRJ\205-J001.SIM

Date 2003/11/18
Time 13:47:50

Operation Name: EX-BTM
Operation Note:

Phase Duties	Process Side	Total Duty
Vapour	0.0000 Btu/hr	5.07923E+06 Btu/hr
Two Phase	0.0000 Btu/hr	
Liquid	5.07923E+06 Btu/hr	

Inlet	Process Side
Stream Name	BTM-0720
From Operation	P-3
Mass Frac Vap	0.0000
Temperature	471.5969 F
Pressure	75.0000 psia
Mass Flow	29463.2561 lb/hr
Flow	101.9916 lbmole/hr

Outlet	Process Side
Stream Name	BTM-0740
To Operation	---
Mass Frac Vap	0.0000
Temperature	175.0000 F
Pressure	50.0000 psia

Fluid Properties	Process Side	
	Liquid	Vapour
Reference Temp 1	175.0000 F	--- F
Reference Press 1	50.0000 psia	--- psia
Heat Capacity	0.4997 Btu/lb-F	--- Btu/lb-F
Viscosity	3.7643 cP	--- cP
Thermal Conductivity	0.0845 Btu/hr-ft-F	--- Btu/hr-ft-F
Density	51.4854 lb/ft3	--- lb/ft3
Molecular Weight	288.8791	---
Z Factor		---
Reference Temp 2	471.5969 F	--- F
Reference Press 2	75.0000 psia	--- psia
Heat Capacity	0.6575 Btu/lb-F	--- Btu/lb-F
Viscosity	0.2899 cP	--- cP
Thermal Conductivity	0.0651 Btu/hr-ft-F	--- Btu/hr-ft-F
Density	44.0875 lb/ft3	--- lb/ft3
Molecular Weight	288.8791	---
Z Factor		---

Duty Btu/hr	Process Heat Curve Temperature F	Mass Frac Vap
5.07923E+06	471.5969	0.0000
3.68371E+06	397.4477	0.0000
2.37225E+06	323.2985	0.0000
1.14691E+06	249.1492	0.0000
0.0018	175.0000	0.0000

HYSIM VESSEL SPECIFICATION SHEET

HYSIM Version STD|C2.72
Case Name E:\HYSIM\HS-205.PRJ\205-J001.SIM

Date 2003/11/18
Time 13:47:50

Operation Name: DESALTER
Operation Note:

	Stream		Operation		Flowrate	
Inlet:	CR-0120	from	EX-Cld	Cooler	72572.8485	lb/hr
Vapour:	CRV-0800	to	---	---	0.0000	lb/hr
HC Liquid:	CR-0150	to	EX-Hot	Cooler	68280.0918	lb/hr
Hvy Liquid:	H2O-DSLTR	to	---	---	4292.7623	lb/hr

Inlet Properties at Operating Conds		
Temperature	225.0000	F
Pressure	85.0000	psia
Mass Frac Vap	0.0000	
Density	45.9295	lb/ft3
Mol. Weight	105.0526	

Inlet Mixed Liquid Properties		
Density	45.9295	lb/ft3
Spec. Grav.	0.7372	SG_H2O60
Mol. Weight	105.0526	
Surface Tens.	30.6704	dyne/cm
Viscosity	0.6070	cP

Vapour Outlet Properties		
Density	0.6455	lb/ft3
Mol. Weight	51.6462	
Z Factor	0.9256	
Viscosity	0.0099	cP

Hydrocarbon Liquid Outlet Properties		
Density	45.3057	lb/ft3
Spec. Grav.	0.7272	SG_H2O60
Mol. Weight	150.8829	
Surface Tens.	16.6869	dyne/cm
Viscosity	0.5140	cP

Heavy Liquid Outlet Properties		
Density	58.8084	lb/ft3
Spec. Grav.	0.9439	SG_H2O60
Mol. Weight	18.0151	
Surface Tens.	57.2268	dyne/cm
Viscosity	0.2592	cP

NOTES :

HYSIM COOLER / HEATER SPECIFICATION SHEET

HYSIM Version STD|C2.72 — Date 2003/11/18
Case Name: E:\HYSIM\HS-205.PRJ\205-J001.SIM — Time 13:47:50

Operation Name: H-1
Operation Note:

Phase Duties	Process Side	Total Duty
Vapour	0.0000 Btu/hr	9.27798E+06 Btu/hr
Two Phase	9.27798E+06 Btu/hr	
Liquid	0.0000 Btu/hr	

Inlet	Process Side
Stream Name	CR-0160
From Operation	EX-Hot
Mass Frac Vap	0.1413
Temperature	365.0000 F
Pressure	60.0000 psia
Mass Flow	68280.0918 lb/hr
Flow	452.5370 lbmole/hr

Outlet	Process Side
Stream Name	CR-0180
To Operation	V-1
Mass Frac Vap	0.6192
Temperature	500.0000 F
Pressure	45.0000 psia

Fluid Properties	Process Side	
	Liquid	Vapour
Reference Temp 1	365.0000 F	365.0000 F
Reference Press 1	60.0000 psia	60.0000 psia
Heat Capacity	0.6273 Btu/lb-F	0.5475 Btu/lb-F
Viscosity	0.2721 cP	0.0097 cP
Thermal Conductivity	0.0544 Btu/hr-ft-F	0.0153 Btu/hr-ft-F
Density	41.8949 lb/ft3	0.6944 lb/ft3
Molecular Weight	167.8133	93.5440
Z Factor		0.9133
Reference Temp 2	500.0000 F	500.0000 F
Reference Press 2	45.0000 psia	45.0000 psia
Heat Capacity	0.6735 Btu/lb-F	0.6062 Btu/lb-F
Viscosity	0.2379 cP	0.0104 cP
Thermal Conductivity	0.0559 Btu/hr-ft-F	0.0182 Btu/hr-ft-F
Density	43.0242 lb/ft3	0.5451 lb/ft3
Molecular Weight	283.3972	117.1895
Z Factor		0.9395

Process Heat Curve

Duty Btu/hr	Temperature F	Mass Frac Vap
9.27798E+06	500.0000	0.6192
7.27421E+06	466.2500	0.5404
5.11575E+06	432.5000	0.4403
2.68315E+06	398.7500	0.3052
0.3497	365.0000	0.1413

HYSIM PUMP SPECIFICATION SHEET

HYSIM Version STD|C2.72

Case Name: E:\HYSIM\HS-205.PRJ\205-J001.SIM

Date 2003/11/18
Time 13:47:50

Operation Name: P-1
Operation Note:

Suction Side : CR-0101

From operation MIX-1 — Mixer

Suction Properties at Operating Conditions

Temperature	75.0000	F	Flow Rates	72572.8485 lb/hr
Pressure	14.0000	psia		180.5943 USGPM
Mass Frac Vap	0.0000			0.0114 m3/s
Mol Weight	105.0526			
Density	50.1020	lb/ft3		
	0.8042	SG_H2O60		
Viscosity	---	cP		

Discharge Side : CR-0110

To operation EX-Cld — Cooler

Discharge Properties at Operating Conditions

Temperature	75.3302	F	Diff Press	96.0000 psi
Pressure	110.0000	psia	Diff Head	275.8663 ft
Mass Frac Vap	0.0000		Comp Ratio	7.8571
Density	50.1554	lb/ft3	Vol. Rate	180.4017 USGPM
	0.8050	SG_H2O60		0.0114 m3/s

Driver :

Energy Stream	QP-1	
Energy Required	34310.3202	Btu/hr
	13.4842	hp
Therm Efficiency	75.0000	%

NOTES :

HYSIM PUMP SPECIFICATION SHEET

HYSIM Version STD|C2.72

Case Name: E:\HYSIM\HS-205.PRJ\205-J001.SIM

Date 2003/11/18
Time 13:47:50

Operation Name: P-2
Operation Note:

Suction Side : LN-0300

From operation V-1 — Column

Suction Properties at Operating Conditions

Temperature	101.9012	F	Flow Rates	3068.9964 lb/hr
Pressure	30.0000	psia		9.8292 USGPM
Mass Frac Vap	0.0000			0.0006 m3/s
Mol Weight	72.2574			
Density	38.9283	lb/ft3		
	0.6248	SG_H2O60		
Viscosity	---	cP		

Discharge Side : LN-0310

To operation V-2 — Column

Discharge Properties at Operating Conditions

Temperature	102.7997	F	Diff Press	115.0000 psi
Pressure	145.0000	psia	Diff Head	425.4839 ft
Mass Frac Vap	0.0000		Comp Ratio	4.8333
Density	39.0094	lb/ft3	Vol. Rate	9.8087 USGPM
	0.6261	SG_H2O60		0.0006 m3/s

Driver :

Energy Stream QP-2
Energy Required 2236.9791 Btu/hr
0.8792 hp
Therm Efficiency 75.0000 %

NOTES :

HYSIM PUMP SPECIFICATION SHEET

HYSIM Version STD|C2.72

Case Name: E:\HYSIM\HS-205.PRJ\205-J001.SIM

Date 2003/11/18
Time 13:47:50

Operation Name: P-3
Operation Note:

Suction Side : BTM-0700

From operation V-1 — Column

Suction Properties at Operating Conditions

Temperature	471.4557	F	Flow Rates	29463.2561 lb/hr
Pressure	45.0000	psia		83.3996 USGPM
Mass Frac Vap	0.0000			0.0053 m3/s
Mol Weight	288.8791			
Density	44.0455	lb/ft3		
	0.7070	SG_H2O60		
Viscosity	0.2899	cP		

Discharge Side : BTM-0720

To operation EX-BTM — Cooler

Discharge Properties at Operating Conditions

Temperature	471.5969	F	Diff Press	30.0000 psi
Pressure	75.0000	psia	Diff Head	98.1872 ft
Mass Frac Vap	0.0000		Comp Ratio	1.6667
Density	44.0875	lb/ft3	Vol. Rate	83.3202 USGPM
	0.7076	SG_H2O60		0.0053 m3/s

Driver :

Energy Stream	QP-3	
Energy Required	4951.5061	Btu/hr
	1.9460	hp
Therm Efficiency	75.0000	%

NOTES :

Hyprotech's Process Simulator HYSIM - Licensed to JS Plunkett & Associates
Date 2003/11/18 Version STD|C2.72 Case Name 205-J001.SIM
Time 14:13:15 Prop Pkg PR Column Name V-1

**** Column Input ****

```
Number of Ideal Stages     24
Stage    1 Pressure                        30.000  psia
Stage   21 Pressure                        45.000  psia
Stage    1 Temperature Estimate           195.000  F
Stage   21 Temperature Estimate           600.000  F
Feed stream CR-0180 enters on stage   18
Feed stream STM_V-1 enters on stage   21
Estimated top stage reflux ratio is   3.0000
Side Liquid draw from stage    1  to stream LN-0300
   Estimated Flow      600.0000  barrel/day
Side Liquid draw from stage    7  to stream HN-0400
   Estimated Flow     2999.9999  barrel/day
Side Exchanger on stage        1 is energy stream QE-OHD
Side Exchanger on stage       24 is energy stream KS-Reb
Side Exchanger on stage       12 is energy stream Q-KSPAR
Side Water draw on stage       1 to stream OH-H2O
Side Water draw on stage       4 to stream V-1-H2O
Pumparound  1 moves liquid from stage   14 to stage   12
   Represented by stream KS-PAR-0580
Side stripper  1 has   3 stages    [  22 to  24]
   Draws liquid from stage   14 and returns vapour to stage   12
   Bottom flow goes to stream          KERO-0510
   Draw stage stream represented by    KS-Draw
   Return stage stream represented by KS-Vap
Overhead vapour product goes to stream V-850
Bottom liquid product goes to stream BTM-0700
```

**** Specifications ****

```
1: Flow of the stage   1 Vapour is to be  0.1000 lbmole/hr
2: ASTM D86 -
      95.0 LiqVol % Cut of the stage   1 Liquid is to be  165.000 F
3: ASTM D86 -
      90.0 LiqVol % Cut of the stage   7 Liquid is to be  325.000 F
4: ASTM D86 -
      98.0 LiqVol % Cut of the stage  24 Liquid is to be  500.000 F
5: Heat Exchanger Duty on stage  24 is to be  500000.00 Btu/hr
6: Pump Around Flow from stage  14 to  12 is to be    1850.00 barrel/day
7: Heat Exchanger Duty on stage  12 is to be  -2.0000E+06 Btu/hr
```

Hyprotech's Process Simulator HYSIM - Licensed to JS Plunkett & Associates
Date 2003/11/18 Version STD|C2.72 Case Name 205-J001.SIM
Time 14:13:17 Prop Pkg PR Column Name V-1

**** Column Feeds ****

Feed Stream Name Enters on stage	CR-0180 18	STM_V-1 21
Vapour Fraction	0.7973	1.0000
Temperature - F	500.00	307.62
Pressure - psia	45.00	75.00
Flowrate - barrel/day	5852.67	20.58
Enthalpy - Btu/hr	17544913.0	99912.2
H2O - LiqVol Frac	0.0009	1.0000
Methane - LiqVol Frac	0.0000	0.0000
Ethane - LiqVol Frac	0.0001	0.0000
Propane - LiqVol Frac	0.0013	0.0000
i-Butane - LiqVol Frac	0.0012	0.0000
n-Butane - LiqVol Frac	0.0048	0.0000
NBP[1]_5 - LiqVol Frac	0.0030	0.0000
NBP[1]_31 - LiqVol Frac	0.0029	0.0000
NBP[1]_53 - LiqVol Frac	0.0045	0.0000
NBP[1]_81 - LiqVol Frac	0.0045	0.0000
NBP[1]_106 - LiqVol Frac	0.0107	0.0000
NBP[1]_131 - LiqVol Frac	0.0173	0.0000
NBP[1]_155 - LiqVol Frac	0.0281	0.0000
NBP[1]_180 - LiqVol Frac	0.0333	0.0000
NBP[1]_208 - LiqVol Frac	0.0578	0.0000
NBP[1]_231 - LiqVol Frac	0.0886	0.0000
NBP[1]_254 - LiqVol Frac	0.0662	0.0000
NBP[1]_282 - LiqVol Frac	0.0839	0.0000
NBP[1]_304 - LiqVol Frac	0.0548	0.0000
NBP[1]_332 - LiqVol Frac	0.0386	0.0000
NBP[1]_356 - LiqVol Frac	0.0319	0.0000
NBP[1]_382 - LiqVol Frac	0.0274	0.0000
NBP[1]_407 - LiqVol Frac	0.0255	0.0000
NBP[1]_433 - LiqVol Frac	0.0243	0.0000
NBP[1]_458 - LiqVol Frac	0.0240	0.0000
NBP[1]_484 - LiqVol Frac	0.0238	0.0000
NBP[1]_509 - LiqVol Frac	0.0238	0.0000
NBP[1]_534 - LiqVol Frac	0.0233	0.0000
NBP[1]_559 - LiqVol Frac	0.0222	0.0000
NBP[1]_585 - LiqVol Frac	0.0198	0.0000
NBP[1]_610 - LiqVol Frac	0.0178	0.0000
NBP[1]_636 - LiqVol Frac	0.0164	0.0000
NBP[1]_661 - LiqVol Frac	0.0156	0.0000
NBP[1]_686 - LiqVol Frac	0.0153	0.0000
NBP[1]_712 - LiqVol Frac	0.0146	0.0000
NBP[1]_737 - LiqVol Frac	0.0142	0.0000
NBP[1]_762 - LiqVol Frac	0.0141	0.0000
NBP[1]_788 - LiqVol Frac	0.0136	0.0000
NBP[1]_826 - LiqVol Frac	0.0264	0.0000
NBP[1]_877 - LiqVol Frac	0.0267	0.0000
NBP[1]_926 - LiqVol Frac	0.0285	0.0000
NBP[1]_977 - LiqVol Frac	0.0266	0.0000
NBP[1]_1029 - LiqVol Frac	0.0215	0.0000

Hyprotech's Process Simulator HYSIM - Licensed to JS Plunkett & Associates
Date 2003/11/18 Version STD|C2.72 Case Name 205-J001.SIM
Time 14:13:19 Prop Pkg PR Column Name V-1

**** Stage Variables ****

Reflux Ratio 15.12934

Stg No	Press psia	Temp F	Flow Rates (barrel/day) Liquid	Vapour	Feed	Draws	Duty MMBtu/hr
1	30.0	101.9	4897.7			0.7 V	-8.918
						323.0 L	
						24.5 W	
2	30.8	159.3	5153.4	5245.8			
3	31.5	189.6	5255.7	5501.5			
4	32.3	210.1	5209.6	5603.8		0.0 W	
5	33.0	230.8	5095.9	5557.7			
6	33.8	256.1	4932.6	5444.0			
7	34.5	288.8	1962.3	5280.7		2765.2 L	
8	35.3	331.5	1865.6	5075.7			
9	36.0	354.2	1792.0	4978.9			
10	36.8	367.3	1707.4	4905.3			
11	37.5	376.9	1604.1	4820.7			
12	38.3	385.8	4410.5	4717.4	1850.1 P		-2.000
					188.3 S		
13	39.0	398.9	4415.9	5485.4			
14	39.8	411.1	1753.7	5490.8		1850.1 P	
						647.8 S	
15	40.5	429.1	1551.5	5326.5			
16	41.3	444.2	1319.1	5124.4			
17	42.0	459.1	779.0	4892.0			
18	42.8	488.2	2568.1	4351.9	5852.7		
19	43.5	482.0	2453.6	288.3			
20	44.3	478.2	2391.0	173.8			
21	45.0	471.5		111.2	20.6	2300.4 L	
Side Stripper 1 draws			647.8 from stg 14 vapour return to stg 12				
22	39.8	431.1	701.0	188.3			
23	39.8	450.4	743.9	241.4			
24	39.8	476.0		284.3		459.6 L	0.500

Hyprotech's Process Simulator HYSIM - Licensed to JS Plunkett & Associates
Date 2003/11/18 Version STD|C2.72 Case Name 205-J001.SIM
Time 14:13:22 Prop Pkg PR Column Name V-1

**** Products ****

Leaving from stage Product Phase Assigned to Stream Name	1 Vapour V-850	1 Liquid LN-0300	1 Water OH-H2O
Temperature - F	101.90	101.90	101.90
Pressure - psia	30.00	30.00	30.00
H2O - LiqVol Frac	0.006055	0.000148	1.000000
Methane - LiqVol Frac	0.000000	0.000000	0.000000
Ethane - LiqVol Frac	0.036349	0.001733	1.34E-10
Propane - LiqVol Frac	0.145205	0.022855	0.000000
i-Butane - LiqVol Frac	0.057494	0.021386	0.000000
n-Butane - LiqVol Frac	0.159801	0.082079	0.000000
NBP[1]_5 - LiqVol Frac	0.137070	0.051175	0.000000
NBP[1]_31 - LiqVol Frac	0.090816	0.049563	0.000000
NBP[1]_53 - LiqVol Frac	0.098292	0.076072	0.000000
NBP[1]_81 - LiqVol Frac	0.059509	0.072479	0.000000
NBP[1]_106 - LiqVol Frac	0.087037	0.163677	0.000000
NBP[1]_131 - LiqVol Frac	0.075070	0.218121	0.000000
NBP[1]_155 - LiqVol Frac	0.039987	0.182171	0.000000
NBP[1]_180 - LiqVol Frac	0.006484	0.047444	0.000000
NBP[1]_208 - LiqVol Frac	0.000733	0.009117	0.000000
NBP[1]_231 - LiqVol Frac	0.000091	0.001816	0.000000
NBP[1]_254 - LiqVol Frac	4.58E-06	0.000150	0.000000
NBP[1]_282 - LiqVol Frac	2.33E-07	0.000014	0.000000
NBP[1]_304 - LiqVol Frac	9.91E-09	9.72E-07	0.000000
NBP[1]_332 - LiqVol Frac	2.11E-10	3.92E-08	0.000000
NBP[1]_356 - LiqVol Frac	0.000000	2.10E-09	0.000000
NBP[1]_382 - LiqVol Frac	0.000000	0.000000	0.000000
NBP[1]_407 - LiqVol Frac	0.000000	0.000000	0.000000
NBP[1]_433 - LiqVol Frac	0.000000	0.000000	0.000000
NBP[1]_458 - LiqVol Frac	0.000000	0.000000	0.000000
NBP[1]_484 - LiqVol Frac	0.000000	0.000000	0.000000
NBP[1]_509 - LiqVol Frac	0.000000	0.000000	0.000000
NBP[1]_534 - LiqVol Frac	0.000000	0.000000	0.000000
NBP[1]_559 - LiqVol Frac	0.000000	0.000000	0.000000
NBP[1]_585 - LiqVol Frac	0.000000	0.000000	0.000000
NBP[1]_610 - LiqVol Frac	0.000000	0.000000	0.000000
NBP[1]_636 - LiqVol Frac	0.000000	0.000000	0.000000
NBP[1]_661 - LiqVol Frac	0.000000	0.000000	0.000000
NBP[1]_686 - LiqVol Frac	0.000000	0.000000	0.000000
NBP[1]_712 - LiqVol Frac	0.000000	0.000000	0.000000
NBP[1]_737 - LiqVol Frac	0.000000	0.000000	0.000000
NBP[1]_762 - LiqVol Frac	0.000000	0.000000	0.000000
NBP[1]_788 - LiqVol Frac	0.000000	0.000000	0.000000
NBP[1]_826 - LiqVol Frac	0.000000	0.000000	0.000000
NBP[1]_877 - LiqVol Frac	0.000000	0.000000	0.000000
NBP[1]_926 - LiqVol Frac	0.000000	0.000000	0.000000
NBP[1]_977 - LiqVol Frac	0.000000	0.000000	0.000000
NBP[1]_1029 - LiqVol Frac	0.000000	0.000000	0.000000
Total Flow - barrel/day	0.67	322.96	24.49

Leaving from stage Product Phase Assigned to Stream Name	4 Water V-1-H2O	7 Liquid HN-0400	21 Liquid BTM-0700
Temperature - F	210.09	288.82	471.46
Pressure - psia	32.25	34.50	45.00
H2O - LiqVol Frac	1.000000	0.000067	0.000583
Methane - LiqVol Frac	0.000000	0.000000	0.000000
Ethane - LiqVol Frac	0.000000	2.31E-06	3.48E-10
Propane - LiqVol Frac	0.000000	0.000064	2.95E-08
i-Butane - LiqVol Frac	0.000000	0.000107	1.16E-07
n-Butane - LiqVol Frac	0.000000	0.000512	6.94E-07
NBP[1]_5 - LiqVol Frac	0.000000	0.000296	4.89E-07
NBP[1]_31 - LiqVol Frac	0.000000	0.000364	7.61E-07
NBP[1]_53 - LiqVol Frac	0.000000	0.000714	1.89E-06
NBP[1]_81 - LiqVol Frac	0.000000	0.000974	3.24E-06
NBP[1]_106 - LiqVol Frac	0.000000	0.003597	0.000014
NBP[1]_131 - LiqVol Frac	0.000000	0.011150	0.000039
NBP[1]_155 - LiqVol Frac	0.000000	0.037971	0.000111
NBP[1]_180 - LiqVol Frac	0.000000	0.064623	0.000240
NBP[1]_208 - LiqVol Frac	0.000000	0.120301	0.000804
NBP[1]_231 - LiqVol Frac	0.000000	0.184657	0.002126
NBP[1]_254 - LiqVol Frac	0.000000	0.136578	0.002717
NBP[1]_282 - LiqVol Frac	0.000000	0.168959	0.006091
NBP[1]_304 - LiqVol Frac	0.000000	0.106563	0.006117
NBP[1]_332 - LiqVol Frac	0.000000	0.069612	0.006985
NBP[1]_356 - LiqVol Frac	0.000000	0.050047	0.008586
NBP[1]_382 - LiqVol Frac	0.000000	0.029736	0.010874
NBP[1]_407 - LiqVol Frac	0.000000	0.010926	0.014644
NBP[1]_433 - LiqVol Frac	0.000000	0.001928	0.020258
NBP[1]_458 - LiqVol Frac	0.000000	0.000230	0.028863
NBP[1]_484 - LiqVol Frac	0.000000	0.000020	0.039816
NBP[1]_509 - LiqVol Frac	0.000000	1.31E-06	0.050322
NBP[1]_534 - LiqVol Frac	0.000000	5.91E-08	0.055615
NBP[1]_559 - LiqVol Frac	0.000000	2.07E-09	0.055379
NBP[1]_585 - LiqVol Frac	0.000000	0.000000	0.050175
NBP[1]_610 - LiqVol Frac	0.000000	0.000000	0.045315
NBP[1]_636 - LiqVol Frac	0.000000	0.000000	0.041800
NBP[1]_661 - LiqVol Frac	0.000000	0.000000	0.039787
NBP[1]_686 - LiqVol Frac	0.000000	0.000000	0.038845
NBP[1]_712 - LiqVol Frac	0.000000	0.000000	0.037186
NBP[1]_737 - LiqVol Frac	0.000000	0.000000	0.036206
NBP[1]_762 - LiqVol Frac	0.000000	0.000000	0.035887
NBP[1]_788 - LiqVol Frac	0.000000	0.000000	0.034516
NBP[1]_826 - LiqVol Frac	0.000000	0.000000	0.067254
NBP[1]_877 - LiqVol Frac	0.000000	0.000000	0.067984
NBP[1]_926 - LiqVol Frac	0.000000	0.000000	0.072462
NBP[1]_977 - LiqVol Frac	0.000000	0.000000	0.067690
NBP[1]_1029 - LiqVol Frac	0.000000	0.000000	0.054703
Total Flow - barrel/day	0.00	[illegible]	[illegible]

Leaving from stage Product Phase Assigned to Stream Name	24 Liquid KERO-0510
Temperature - F	475.95
Pressure - psia	39.75
H2O - LiqVol Frac	3.23E-09
Methane - LiqVol Frac	0.000000
Ethane - LiqVol Frac	1.96E-10

Propane	- LiqVol Frac	2.04E-08
i-Butane	- LiqVol Frac	9.26E-08
n-Butane	- LiqVol Frac	5.96E-07
NBP[1]_5	- LiqVol Frac	4.06E-07
NBP[1]_31	- LiqVol Frac	6.75E-07
NBP[1]_53	- LiqVol Frac	1.79E-06
NBP[1]_81	- LiqVol Frac	3.36E-06
NBP[1]_106	- LiqVol Frac	0.000016
NBP[1]_131	- LiqVol Frac	0.000049
NBP[1]_155	- LiqVol Frac	0.000160
NBP[1]_180	- LiqVol Frac	0.000402
NBP[1]_208	- LiqVol Frac	0.001610
NBP[1]_231	- LiqVol Frac	0.005023
NBP[1]_254	- LiqVol Frac	0.007703
NBP[1]_282	- LiqVol Frac	0.021466
NBP[1]_304	- LiqVol Frac	0.025912
NBP[1]_332	- LiqVol Frac	0.038091
NBP[1]_356	- LiqVol Frac	0.062580
NBP[1]_382	- LiqVol Frac	0.115628
NBP[1]_407	- LiqVol Frac	0.185603
NBP[1]_433	- LiqVol Frac	0.196123
NBP[1]_458	- LiqVol Frac	0.159932
NBP[1]_484	- LiqVol Frac	0.103966
NBP[1]_509	- LiqVol Frac	0.050867
NBP[1]_534	- LiqVol Frac	0.018172
NBP[1]_559	- LiqVol Frac	0.005180
NBP[1]_585	- LiqVol Frac	0.001193
NBP[1]_610	- LiqVol Frac	0.000254
NBP[1]_636	- LiqVol Frac	0.000051
NBP[1]_661	- LiqVol Frac	0.000010
NBP[1]_686	- LiqVol Frac	1.98E-06
NBP[1]_712	- LiqVol Frac	3.56E-07
NBP[1]_737	- LiqVol Frac	6.40E-08
NBP[1]_762	- LiqVol Frac	1.11E-08
NBP[1]_788	- LiqVol Frac	1.82E-09
NBP[1]_826	- LiqVol Frac	2.31E-10
NBP[1]_877	- LiqVol Frac	0.000000
NBP[1]_926	- LiqVol Frac	0.000000
NBP[1]_977	- LiqVol Frac	0.000000
NBP[1]_1029	- LiqVol Frac	0.000000
Total Flow	- barrel/day	459.57

SIZING SUMMARY

Section Name	Stages	Type	Mode	Diam ft	NFP	Limit	Stage
Section_1	2- 18	Valve	Dsgn	5.00	1	Press Drop Press Drop	4 AA 2 DC
Section_2	19- 19	Valve	Dsgn	2.00	1	FlowPath Ln	19

Hyprotech's Process Simulator HYSIM - Licensed to JS Plunkett & Associates
Date 2003/11/18 Version STD|C2.72 Case Name 205-J001.SIM
Time 14:13:34 Prop Pkg PR Column Name V-1

**** Condenser Cooling Curve ****

Temperature F	Pressure psia	Flow Rates (barrel/day) Liquid	Vapour	Duty MMBtu/hr
159.28	30.75	0.00	5245.75	0.0000
153.55	30.68	766.35	4479.40	-1.2065
147.81	30.60	1481.29	3764.46	-2.3375
142.07	30.53	2118.84	3126.91	-3.3576
136.33	30.45	2678.06	2567.69	-4.2666
130.59	30.38	3164.92	2080.83	-5.0738
124.85	30.30	3694.14	1551.61	-6.0276
119.12	30.23	4197.15	1048.60	-6.9490
113.38	30.15	4628.88	616.88	-7.7397
107.64	30.08	4984.43	261.33	-8.4022
101.90	30.00	5245.04	0.72	-8.9177

Hyprotech's Process Simulator HYSIM - Licensed to JS Plunkett & Associates
Date 2003/11/18 Version STD|C2.72 Case Name 205-J001.SIM
Time 14:13:37 Prop Pkg PR Column Name V-1

**** Pump Around Summary ****

	Draw Stge	Return Stge	Flow Rate barrel/day	Cooler Duty MMBtu/hr	Return Temp F
1	14	12	1850.144	-2.000	259.610

Hyprotech's Process Simulator HYSIM - Licensed to JS Plunkett & Associates
Date 2003/11/18 Version STD|C2.72 Case Name 205-J001.SIM
Time 14:13:47 Prop Pkg PR Column Name V-2

**** Column Input ****

```
Number of Ideal Stages      20
Stage     1 Pressure                    115.000  psia
Stage    20 Pressure                    120.000  psia
Stage     1 Temperature Estimate        125.000  F
Stage    20 Temperature Estimate        250.000  F
Feed stream LN-0310 enters on stage     10
Estimated top stage reflux ratio is     3.0000
Side Liquid draw from stage     1  to stream Stab_Liq
Side Exchanger on stage         1 is energy stream Q-StabCond
Side Exchanger on stage        20 is energy stream Q-StabReb
Side Water draw on stage        1 to stream Stab_H2O
Overhead vapour product goes to stream Stab-OG
Bottom liquid product goes to stream StabGaso
```

**** Specifications ****

```
1: Flow of the stage   1 Vapour is to be  0.1000 lbmole/hr
2: Flow of the stage   1 Side Liquid is to be   66.000 barrel/day
3: Heat Exchanger Duty on stage  20 is to be   2.0000E+06 Btu/hr
```

Hyprotech's Process Simulator HYSIM - Licensed to JS Plunkett & Associates
Date 2003/11/18 Version STD|C2.72 Case Name 205-J001.SIM
Time 14:13:49 Prop Pkg PR Column Name V-2

**** Column Feeds ****

Feed Stream Name Enters on stage	LN-0310 10
Vapour Fraction	0.0000
Temperature - F	102.80
Pressure - psia	145.00
Flowrate - barrel/day	322.96
Enthalpy - Btu/hr	-92990.4
H2O - LiqVol Frac	0.0001
Methane - LiqVol Frac	0.0000
Ethane - LiqVol Frac	0.0017
Propane - LiqVol Frac	0.0229
i-Butane - LiqVol Frac	0.0214
n-Butane - LiqVol Frac	0.0821
NBP[1]_5 - LiqVol Frac	0.0512
NBP[1]_31 - LiqVol Frac	0.0496
NBP[1]_53 - LiqVol Frac	0.0761
NBP[1]_81 - LiqVol Frac	0.0725
NBP[1]_106 - LiqVol Frac	0.1637
NBP[1]_131 - LiqVol Frac	0.2181
NBP[1]_155 - LiqVol Frac	0.1822
NBP[1]_180 - LiqVol Frac	0.0474
NBP[1]_208 - LiqVol Frac	0.0091
NBP[1]_231 - LiqVol Frac	0.0018
NBP[1]_254 - LiqVol Frac	0.0002
NBP[1]_282 - LiqVol Frac	1.388E-05
NBP[1]_304 - LiqVol Frac	9.727E-07
NBP[1]_332 - LiqVol Frac	3.924E-08
NBP[1]_356 - LiqVol Frac	2.104E-09
NBP[1]_382 - LiqVol Frac	0.0000
NBP[1]_407 - LiqVol Frac	0.0000
NBP[1]_433 - LiqVol Frac	0.0000
NBP[1]_458 - LiqVol Frac	0.0000
NBP[1]_484 - LiqVol Frac	0.0000
NBP[1]_509 - LiqVol Frac	0.0000
NBP[1]_534 - LiqVol Frac	0.0000
NBP[1]_559 - LiqVol Frac	0.0000
NBP[1]_585 - LiqVol Frac	0.0000
NBP[1]_610 - LiqVol Frac	0.0000
NBP[1]_636 - LiqVol Frac	0.0000
NBP[1]_661 - LiqVol Frac	0.0000
NBP[1]_686 - LiqVol Frac	0.0000
NBP[1]_712 - LiqVol Frac	0.0000
NBP[1]_737 - LiqVol Frac	0.0000
NBP[1]_762 - LiqVol Frac	0.0000
NBP[1]_788 - LiqVol Frac	0.0000
NBP[1]_826 - LiqVol Frac	0.0000
NBP[1]_877 - LiqVol Frac	0.0000
NBP[1]_926 - LiqVol Frac	0.0000
NBP[1]_977 - LiqVol Frac	0.0000
NBP[1]_1029 - LiqVol Frac	0.0000

Hyprotech's Process Simulator HYSIM - Licensed to JS Plunkett & Associates
Date 2003/11/18 Version STD|C2.72 Case Name 205-J001.SIM
Time 14:13:52 Prop Pkg PR Column Name V-2

**** Stage Variables ****

Reflux Ratio 21.08693

Stg No	Press psia	Temp F	Flow Rates (barrel/day) Liquid	Vapour	Feed	Draws	Duty MMBtu/hr
1	115.0	127.6	1405.6			0.6 V 66.0 L 0.0 W	-1.754
2	115.3	142.4	1450.2	1472.2			
3	115.5	148.8	1466.1	1516.9			
4	115.8	152.4	1472.2	1532.7			
5	116.1	154.9	1474.6	1538.9			
6	116.3	157.0	1474.9	1541.3			
7	116.6	159.1	1472.4	1541.6			
8	116.8	161.8	1462.6	1539.1			
9	117.1	166.2	1432.1	1529.3			
10	117.4	175.5	1912.2	1498.8	323.0		
11	117.6	178.5	1917.6	1655.9			
12	117.9	181.6	1920.8	1661.3			
13	118.2	185.4	1922.1	1664.5			
14	118.4	190.0	1920.5	1665.8			
15	118.7	196.1	1914.6	1664.2			
16	118.9	204.3	1904.0	1658.3			
17	119.2	215.2	1890.7	1647.7			
18	119.5	228.9	1880.3	1634.4			
19	119.7	245.1	1878.0	1624.0			
20	120.0	262.2		1621.7		256.3 L	2.000

Hyprotech's Process Simulator HYSIM - Licensed to JS Plunkett & Associates
Date 2003/11/18 Version STD|C2.72 Case Name 205-J001.SIM
Time 14:13:56 Prop Pkg PR Column Name V-2

**** Products ****

Leaving from stage Product Phase Assigned to Stream Name	1 Vapour Stab-OG	1 Liquid Stab_Liq	1 Water Stab_H2O
Temperature - F	127.63	127.63	127.63
Pressure - psia	115.00	115.00	115.00
H2O - LiqVol Frac	0.003389	0.000329	1.000000
Methane - LiqVol Frac	0.000000	0.000000	0.000000
Ethane - LiqVol Frac	0.045193	0.008045	1.72E-09
Propane - LiqVol Frac	0.223707	0.109686	1.15E-10
i-Butane - LiqVol Frac	0.101555	0.103406	0.000000
n-Butane - LiqVol Frac	0.271202	0.361765	0.000000
NBP[1]_5 - LiqVol Frac	0.237527	0.246601	0.000000
NBP[1]_31 - LiqVol Frac	0.112017	0.159781	0.000000
NBP[1]_53 - LiqVol Frac	0.005370	0.010271	0.000000
NBP[1]_81 - LiqVol Frac	0.000039	0.000108	0.000000
NBP[1]_106 - LiqVol Frac	1.94E-06	7.80E-06	0.000000
NBP[1]_131 - LiqVol Frac	7.68E-08	4.43E-07	0.000000
NBP[1]_155 - LiqVol Frac	1.81E-09	1.52E-08	0.000000
NBP[1]_180 - LiqVol Frac	0.000000	1.41E-10	0.000000
NBP[1]_208 - LiqVol Frac	0.000000	0.000000	0.000000
NBP[1]_231 - LiqVol Frac	0.000000	0.000000	0.000000
NBP[1]_254 - LiqVol Frac	0.000000	0.000000	0.000000
NBP[1]_282 - LiqVol Frac	0.000000	0.000000	0.000000
NBP[1]_304 - LiqVol Frac	0.000000	0.000000	0.000000
NBP[1]_332 - LiqVol Frac	0.000000	0.000000	0.000000
NBP[1]_356 - LiqVol Frac	0.000000	0.000000	0.000000
NBP[1]_382 - LiqVol Frac	0.000000	0.000000	0.000000
NBP[1]_407 - LiqVol Frac	0.000000	0.000000	0.000000
NBP[1]_433 - LiqVol Frac	0.000000	0.000000	0.000000
NBP[1]_458 - LiqVol Frac	0.000000	0.000000	0.000000
NBP[1]_484 - LiqVol Frac	0.000000	0.000000	0.000000
NBP[1]_509 - LiqVol Frac	0.000000	0.000000	0.000000
NBP[1]_534 - LiqVol Frac	0.000000	0.000000	0.000000
NBP[1]_559 - LiqVol Frac	0.000000	0.000000	0.000000
NBP[1]_585 - LiqVol Frac	0.000000	0.000000	0.000000
NBP[1]_610 - LiqVol Frac	0.000000	0.000000	0.000000
NBP[1]_636 - LiqVol Frac	0.000000	0.000000	0.000000
NBP[1]_661 - LiqVol Frac	0.000000	0.000000	0.000000
NBP[1]_686 - LiqVol Frac	0.000000	0.000000	0.000000
NBP[1]_712 - LiqVol Frac	0.000000	0.000000	0.000000
NBP[1]_737 - LiqVol Frac	0.000000	0.000000	0.000000
NBP[1]_762 - LiqVol Frac	0.000000	0.000000	0.000000
NBP[1]_788 - LiqVol Frac	0.000000	0.000000	0.000000
NBP[1]_826 - LiqVol Frac	0.000000	0.000000	0.000000
NBP[1]_877 - LiqVol Frac	0.000000	0.000000	0.000000
NBP[1]_926 - LiqVol Frac	0.000000	0.000000	0.000000
NBP[1]_977 - LiqVol Frac	0.000000	0.000000	0.000000
NBP[1]_1029 - LiqVol Frac	0.000000	0.000000	0.000000
Total Flow - barrel/day	0.63	66.00	0.02

Leaving from stage Product Phase Assigned to Stream Name	20 Liquid StabGaso
Temperature - F	262.24
Pressure - psia	120.00
H2O - LiqVol Frac	0.000000
Methane - LiqVol Frac	0.000000
Ethane - LiqVol Frac	0.000000
Propane - LiqVol Frac	2.93E-08
i-Butane - LiqVol Frac	0.000068
n-Butane - LiqVol Frac	0.009596
NBP[1]_5 - LiqVol Frac	0.000394
NBP[1]_31 - LiqVol Frac	0.021031
NBP[1]_53 - LiqVol Frac	0.093198
NBP[1]_81 - LiqVol Frac	0.091302
NBP[1]_106 - LiqVol Frac	0.206244
NBP[1]_131 - LiqVol Frac	0.274850
NBP[1]_155 - LiqVol Frac	0.229549
NBP[1]_180 - LiqVol Frac	0.059784
NBP[1]_208 - LiqVol Frac	0.011488
NBP[1]_231 - LiqVol Frac	0.002288
NBP[1]_254 - LiqVol Frac	0.000190
NBP[1]_282 - LiqVol Frac	0.000018
NBP[1]_304 - LiqVol Frac	1.22E-06
NBP[1]_332 - LiqVol Frac	4.94E-08
NBP[1]_356 - LiqVol Frac	2.65E-09
NBP[1]_382 - LiqVol Frac	0.000000
NBP[1]_407 - LiqVol Frac	0.000000
NBP[1]_433 - LiqVol Frac	0.000000
NBP[1]_458 - LiqVol Frac	0.000000
NBP[1]_484 - LiqVol Frac	0.000000
NBP[1]_509 - LiqVol Frac	0.000000
NBP[1]_534 - LiqVol Frac	0.000000
NBP[1]_559 - LiqVol Frac	0.000000
NBP[1]_585 - LiqVol Frac	0.000000
NBP[1]_610 - LiqVol Frac	0.000000
NBP[1]_636 - LiqVol Frac	0.000000
NBP[1]_661 - LiqVol Frac	0.000000
NBP[1]_686 - LiqVol Frac	0.000000
NBP[1]_712 - LiqVol Frac	0.000000
NBP[1]_737 - LiqVol Frac	0.000000
NBP[1]_762 - LiqVol Frac	0.000000
NBP[1]_788 - LiqVol Frac	0.000000
NBP[1]_826 - LiqVol Frac	0.000000
NBP[1]_877 - LiqVol Frac	0.000000
NBP[1]_926 - LiqVol Frac	0.000000
NBP[1]_977 - LiqVol Frac	0.000000
NBP[1]_1029 - LiqVol Frac	0.000000
Total Flow - barrel/day	256.30

SIZING SUMMARY

Section Name	Stages	Type	Mode	Diam ft	NFP	Limit	Stage
Section_1	2- 19	Valve	Dsgn	2.50	1	Press Drop	10

Hyprotech's Process Simulator HYSIM - Licensed to JS Plunkett & Associates
Date 2003/11/18 Version STD|C2.72 Case Name 205-J001.SIM
Time 14:14:06 Prop Pkg PR Column Name V-2

**** Condenser Cooling Curve ****

Temperature F	Pressure psia	Flow Rates (barrel/day) Liquid	Vapour	Duty MMBtu/hr
142.35	115.26	0.00	1472.23	0.0000
140.88	115.24	292.91	1179.32	-0.3391
139.41	115.21	537.73	934.51	-0.6240
137.94	115.18	742.22	730.01	-0.8636
136.46	115.16	913.18	559.05	-1.0656
134.99	115.13	1056.08	416.15	-1.2361
133.52	115.11	1175.15	297.08	-1.3798
132.05	115.08	1273.64	198.60	-1.5005
130.57	115.05	1354.08	118.16	-1.6010
129.10	115.03	1418.64	53.60	-1.6838
127.63	115.00	1471.67	0.57	-1.7541

Hyprotech's Process Simulator HYSIM - Licensed to JS Plunkett & Associates
Date 2003/11/18 Version STD|C2.72 Case Name 205-J001.SIM
Time 14:14:06 Prop Pkg PR Column Name V-2

**** Reboiler Heating Curve ****

Temperature F	Pressure psia	Flow Rates (barrel/day) Liquid	Vapour	Duty MMBtu/hr
245.06	119.74	1878.03	0.00	0.0000
246.78	119.76	1733.65	144.38	0.1791
248.50	119.79	1585.28	292.75	0:3627
250.22	119.82	1432.81	445.22	0.5512
251.93	119.84	1276.20	601.83	0.7445
253.65	119.87	1115.42	762.61	0.9427
255.37	119.89	950.55	927.48	1.1458
257.09	119.92	781.77	1096.26	1.3535
258.81	119.95	609.40	1268.63	1.5656
260.53	119.97	433.98	1444.05	1.7814
262.24	120.00	256.30	1621.73	2.0000

Hyprotech's Process Simulator HYSIM - Licensed to JS Plunkett & Associates
Date 2003/11/18 Version STD|C2.72 Case Name 205-J001.SIM
Time 14:11:53 Prop Pkg PR

Tabulated Properties For Tables for Stream * CR-0101

Liquid Volume Percent	True BP Temp. (F)	ASTM-D86 Temp. (F)	ASTM-D86 Corrected (F)	D1160-VAC Temp. (F)	D1160-ATM Temp. (F)	D2887-OLD Temp. (F)
0.0	9.3	105.1	105.1	-97.0	46.7	19.0
2.0	80.3	162.7	162.7	-46.2	113.8	90.4
5.0	141.3	204.2	204.2	-4.7	168.1	149.7
10.0	183.9	231.2	231.2	23.6	204.8	190.1
15.0	211.4	248.6	248.6	41.2	227.5	216.5
20.0	227.0	258.6	258.6	52.2	241.6	231.7
30.0	257.4	278.9	278.9	72.5	267.6	262.2
40.0	291.0	303.7	303.7	95.3	296.7	298.1
50.0	343.0	345.3	345.3	132.1	343.1	355.2
60.0	433.9	424.3	424.3	204.9	433.9	447.0
70.0	540.1	523.9	516.6	291.8	540.1	544.3
80.0	676.6	658.7	632.7	406.2	676.6	672.0
90.0	858.2	823.8	740.0	563.3	858.2	866.1
95.0	948.2	890.2	771.7	643.5	948.2	968.7
98.0	1008.3	925.5	786.3	697.8	1008.3	1031.4
100.0	1028.9	936.1	790.5	716.6	1028.9	1051.4

Liquid Volume Percent	D2887-NEW Temp. (F)	D2887-NEW2 Temp. (F)
0.0	-18.0	-87.2
2.0	78.3	15.8
5.0	143.9	104.7
10.0	192.9	166.1
15.0	223.9	195.5
20.0	241.1	212.3
30.0	273.8	240.9
40.0	307.2	279.7
50.0	353.1	342.7
60.0	435.5	436.5
70.0	529.0	533.4
80.0	662.2	638.8
90.0	829.8	838.4
95.0	966.8	988.3
98.0	1059.7	1073.9
100.0	1090.3	1099.2

Hyprotech's Process Simulator HYSIM - Licensed to JS Plunkett & Associates
Date 2003/11/18 Version STD|C2.72 Case Name 205-J001.SIM
Time 14:11:53 Prop Pkg PR

Tabulated Properties For Tables for Stream * LN-0300

Liquid Volume Percent	True BP Temp. (F)	ASTM-D86 Temp. (F)	ASTM-D86 Corrected (F)	D1160-VAC Temp. (F)	D1160-ATM Temp. (F)	D2887-OLD Temp. (F)
0.0	-58.3	19.6	19.6	-136.3	-6.0	-43.0
2.0	-35.7	33.9	33.9	-126.8	6.8	-22.9
5.0	4.8	58.6	58.6	-113.0	25.2	21.7
10.0	16.8	65.2	65.2	-106.5	34.0	35.7
15.0	30.9	72.8	72.8	-98.3	44.9	48.4
20.0	34.5	74.4	74.4	-96.4	47.4	51.5
30.0	65.6	92.4	92.4	-76.4	74.0	84.4
40.0	95.9	111.3	111.3	-57.3	99.2	116.1
50.0	112.8	122.3	122.3	-46.8	113.1	132.4
60.0	125.4	129.9	129.9	-37.5	125.2	142.9
70.0	135.9	137.4	137.4	-29.4	135.9	151.3
80.0	147.7	144.3	144.3	-20.4	147.7	161.3
90.0	166.2	158.7	158.7	-6.1	166.3	176.9
95.0	174.7	165.0	165.0	0.3	174.6	184.4
98.0	187.2	176.2	176.2	10.0	187.2	193.8
100.0	198.0	186.0	186.0	18.3	198.0	201.5

Liquid Volume Percent	D2887-NEW Temp. (F)	D2887-NEW2 Temp. (F)
0.0	-58.3	-131.7
2.0	-36.8	-92.7
5.0	13.2	-22.9
10.0	27.2	-3.0
15.0	43.4	18.4
20.0	47.1	22.3
30.0	82.2	59.0
40.0	113.5	92.7
50.0	130.1	113.0
60.0	143.2	129.4
70.0	154.2	141.9
80.0	166.5	154.7
90.0	186.2	178.4
95.0	194.7	188.9
98.0	209.2	207.2
100.0	222.0	223.2

Hyprotech's Process Simulator HYSIM - Licensed to JS Plunkett & Associates
Date 2003/11/18 Version STD|C2.72 Case Name 205-J001.SIM
Time 14:11:53 Prop Pkg PR

Tabulated Properties For Tables for Stream * HN-0400

Liquid Volume Percent	True BP Temp. (F)	ASTM-D86 Temp. (F)	ASTM-D86 Corrected (F)	D1160-VAC Temp. (F)	D1160-ATM Temp. (F)	D2887-OLD Temp. (F)
0.0	96.7	166.7	166.7	-20.1	148.0	105.4
2.0	138.6	196.6	196.6	-5.2	167.5	153.2
5.0	161.9	210.4	210.4	6.1	182.1	171.8
10.0	185.1	223.1	223.1	18.1	197.7	195.0
15.0	200.6	231.2	231.2	27.6	210.0	212.2
20.0	211.5	236.8	236.8	34.1	218.4	223.3
30.0	226.6	244.7	244.7	44.5	231.8	240.5
40.0	240.2	252.1	252.1	53.0	242.7	253.9
50.0	255.5	261.0	261.0	63.1	255.6	268.2
60.0	273.3	272.3	272.3	76.9	273.2	284.3
70.0	288.9	282.8	282.8	89.2	288.8	298.1
80.0	308.2	297.5	297.5	104.4	308.2	315.9
90.0	341.5	325.0	325.0	130.8	341.5	347.6
95.0	367.3	348.1	348.1	151.4	367.4	374.7
98.0	387.7	366.9	366.9	167.7	387.7	398.5
100.0	401.9	380.1	380.1	179.1	401.9	416.9

Liquid Volume Percent	D2887-NEW Temp. (F)	D2887-NEW2 Temp. (F)
0.0	86.7	33.8
2.0	133.1	93.0
5.0	161.5	125.9
10.0	189.8	158.8
15.0	208.1	179.9
20.0	219.4	194.5
30.0	238.0	215.1
40.0	253.1	234.3
50.0	269.6	255.4
60.0	287.6	277.4
70.0	302.5	294.1
80.0	321.2	313.1
90.0	359.0	347.8
95.0	390.9	389.7
98.0	427.0	425.1
100.0	458.6	448.6

Hyprotech's Process Simulator HYSIM - Licensed to JS Plunkett & Associates
Date 2003/11/18 Version STD|C2.72 Case Name 205-J001.SIM
Time 14:11:54 Prop Pkg PR

Tabulated Properties For Tables for Stream * KERO-0510

Liquid Volume Percent	True BP Temp. (F)	ASTM-D86 Temp. (F)	ASTM-D86 Corrected (F)	D1160-VAC Temp. (F)	D1160-ATM Temp. (F)	D2887-OLD Temp. (F)
0.0	229.3	300.7	300.7	86.1	284.9	236.4
2.0	271.9	332.0	332.0	107.6	312.2	272.9
5.0	304.6	353.7	353.7	120.0	327.8	307.8
10.0	342.8	377.2	377.2	142.9	356.7	349.6
15.0	363.2	389.0	389.0	156.6	373.8	371.2
20.0	377.6	397.3	397.3	166.2	385.8	385.8
30.0	397.4	408.4	408.4	179.4	402.3	404.7
40.0	411.5	416.2	416.2	188.9	414.1	417.2
50.0	424.9	423.9	423.9	198.2	425.6	429.2
60.0	438.0	431.7	431.7	208.0	437.7	441.4
70.0	452.0	440.8	440.8	219.5	451.9	455.4
80.0	467.9	452.0	452.0	232.5	467.9	470.9
90.0	492.8	472.0	472.0	252.9	492.8	497.5
95.0	509.3	485.9	485.9	266.4	509.3	516.0
98.0	531.3	506.2	500.1	284.5	531.3	546.5
100.0	545.1	519.7	512.7	296.0	545.1	570.4

Liquid Volume Percent	D2887-NEW Temp. (F)	D2887-NEW2 Temp. (F)
0.0	202.8	183.0
2.0	254.7	234.9
5.0	293.7	274.7
10.0	338.0	321.1
15.0	361.1	344.4
20.0	377.2	361.0
30.0	399.3	385.8
40.0	415.0	405.7
50.0	429.7	424.5
60.0	443.3	441.7
70.0	457.5	458.2
80.0	472.8	476.5
90.0	500.1	503.4
95.0	519.2	527.1
98.0	553.4	564.1
100.0	582.0	587.2

Hyprotech's Process Simulator HYSIM - Licensed to JS Plunkett & Associates
Date 2003/11/18 Version STD|C2.72 Case Name 205-J001.SIM
Time 14:11:54 Prop Pkg PR

Tabulated Properties For Tables for Stream * BTM-0700

Liquid Volume Percent	True BP Temp. (F)	ASTM-D86 Temp. (F)	ASTM-D86 Corrected (F)	D1160-VAC Temp. (F)	D1160-ATM Temp. (F)	D2887-OLD Temp. (F)
0.0	252.6	328.3	328.3	74.3	269.9	247.8
2.0	324.3	379.7	379.7	134.2	345.8	310.9
5.0	403.9	438.0	438.0	197.0	424.1	385.6
10.0	463.5	482.9	482.9	242.4	480.1	444.6
15.0	496.6	508.7	502.4	267.5	510.6	478.3
20.0	522.1	528.8	521.1	286.6	533.9	504.6
30.0	567.7	565.8	554.8	321.2	575.5	552.4
40.0	620.1	610.3	593.4	361.4	623.7	607.8
50.0	682.2	665.2	637.8	411.0	682.3	673.1
60.0	750.2	727.8	682.8	469.1	750.2	741.4
70.0	823.2	796.7	725.3	532.6	823.2	814.4
80.0	897.5	868.4	761.9	598.1	897.5	886.2
90.0	968.3	935.4	790.2	661.6	968.3	973.3
95.0	1009.5	972.7	804.0	698.9	1009.5	1037.6
98.0	1035.2	995.2	811.6	722.4	1035.2	1082.7
100.0	1052.1	1009.6	816.3	737.8	1052.1	1114.9

Liquid Volume Percent	D2887-NEW Temp. (F)	D2887-NEW2 Temp. (F)
0.0	186.6	158.4
2.0	275.3	252.5
5.0	372.8	357.0
10.0	444.0	435.1
15.0	482.5	476.6
20.0	511.3	507.5
30.0	560.3	560.7
40.0	609.3	618.1
50.0	663.3	682.2
60.0	728.0	748.2
70.0	800.8	815.6
80.0	869.1	871.9
90.0	959.6	950.8
95.0	1031.1	1015.4
98.0	1082.8	1056.3
100.0	1120.2	1081.3

Hyprotech's Process Simulator HYSIM - Licensed to JS Plunkett & Associates
Date 2003/11/18 Version STD|C2.72 Case Name 205-J001.SIM
Time 14:11:54 Prop Pkg PR

Tabulated Properties For Tables for Stream * Stab_Liq

Liquid Volume Percent	True BP Temp. (F)	ASTM-D86 Temp. (F)	ASTM-D86 Corrected (F)	D1160-VAC Temp. (F)	D1160-ATM Temp. (F)	D2887-OLD Temp. (F)
0.0	-111.1	-45.4	-45.4	-180.0	-65.1	-102.3
2.0	-86.9	-29.2	-29.2	-171.3	-53.3	-76.4
5.0	-55.5	-9.8	-9.8	-159.7	-37.5	-44.8
10.0	-33.6	2.2	2.2	-149.1	-23.2	-22.9
15.0	-19.9	21.5	21.5	-140.9	-12.1	10.5
20.0	-6.2	16.3	16.3	-127.3	6.1	6.2
30.0	7.0	23.6	23.6	-124.7	9.6	21.7
40.0	9.4	24.9	24.9	-123.3	11.5	25.1
50.0	22.0	33.2	33.2	-114.8	22.9	42.2
60.0	30.9	37.7	37.7	-108.8	30.9	51.4
70.0	31.0	37.8	37.8	-108.7	31.0	51.5
80.0	31.1	37.9	37.9	-108.6	31.1	51.6
90.0	36.7	42.0	42.0	-105.4	35.5	56.6
95.0	38.8	43.5	43.5	-102.9	38.8	58.5
98.0	41.1	45.3	45.3	-101.2	41.1	60.5
100.0	42.8	46.5	46.5	-99.9	42.8	62.0

Liquid Volume Percent	D2887-NEW Temp. (F)	D2887-NEW2 Temp. (F)
0.0	-121.4	-172.8
2.0	-91.9	-135.8
5.0	-56.1	-91.1
10.0	-32.0	-61.6
15.0	5.2	-15.7
20.0	-0.9	-24.3
30.0	15.3	-4.6
40.0	18.7	0.1
50.0	38.2	21.4
60.0	48.6	37.1
70.0	48.8	37.3
80.0	48.9	37.5
90.0	53.7	49.7
95.0	55.5	54.3
98.0	57.5	59.4
100.0	58.9	63.1

Hyprotech's Process Simulator HYSIM - Licensed to JS Plunkett & Associates
Date 2003/11/18 Version STD|C2.72 Case Name 205-J001.SIM
Time 14:11:54 Prop Pkg PR

Tabulated Properties For Tables for Stream * StabGaso

Liquid Volume Percent	True BP Temp. (F)	ASTM-D86 Temp. (F)	ASTM-D86 Corrected (F)	D1160-VAC Temp. (F)	D1160-ATM Temp. (F)	D2887-OLD Temp. (F)
0.0	29.7	86.8	86.8	-88.7	57.6	34.3
2.0	31.0	87.3	87.3	-88.2	58.3	36.0
5.0	41.9	91.9	91.9	-84.7	63.0	49.8
10.0	61.2	100.7	100.7	-76.9	73.3	73.6
15.0	76.1	108.3	108.3	-68.9	84.0	90.7
20.0	87.8	114.5	114.5	-61.7	93.4	101.5
30.0	104.1	123.3	123.3	-50.9	107.7	120.6
40.0	116.2	129.8	129.8	-42.9	118.1	133.2
50.0	125.8	135.0	135.0	-36.7	126.3	143.3
60.0	134.1	140.4	140.4	-30.9	133.9	151.7
70.0	142.8	144.7	144.7	-24.3	142.6	159.8
80.0	153.9	152.3	152.3	-15.7	153.9	169.4
90.0	170.8	165.3	165.3	-2.7	170.8	183.3
95.0	178.1	170.8	170.8	3.0	178.1	189.4
98.0	191.4	182.6	182.6	13.2	191.4	199.7
100.0	202.5	192.6	192.6	21.8	202.5	208.3

Liquid Volume Percent	D2887-NEW Temp. (F)	D2887-NEW2 Temp. (F)
0.0	38.2	-12.7
2.0	39.2	-10.7
5.0	49.1	5.9
10.0	67.9	31.9
15.0	84.4	54.3
20.0	98.0	69.8
30.0	117.5	91.9
40.0	131.8	109.8
50.0	143.0	125.2
60.0	152.5	137.7
70.0	162.1	148.7
80.0	173.9	162.3
90.0	191.4	183.3
95.0	198.7	192.1
98.0	214.2	211.0
100.0	227.4	227.3

+++ SOLUTION NOT REACHED +++

STREAM NUMBER 5 CONNECTING (1) M-1
NAME: Crude Feed TO (2) P-2
K-VALUES: ASOA ENTHALPY: ASOA DENSITY: STD FLOW RATES /HR
LIQ VISC: API LIQ THC: TEMA SUR TEN: HADD
FREE WATER LIQUID PHASE PROPERTIES CALCULATED BY STEAM TABLES.

ID	COMPONENT NAME	TOTAL LBMOL	LIQUID LBMOL	VAPOR LBMOL	TOTAL LB	TOTAL MOL PCT	KVALUE
62	WATER	8.09934	0.545261	0.	145.912	1.8601	
3	ETHANE	0.136894	0.136894	0.	4.11614	0.031439	
4	PROPANE	1.98199	1.98199	0.	87.3938	0.45519	
5	I-BUTANE	1.81149	1.81149	0.	105.284	0.41603	
6	N-BUTANE	7.21761	7.21761	0.	419.488	1.6576	
7	I-PENTANE	8.55731	8.55731	0.	617.376	1.9653	
8	N-PENTANE	11.0227	11.0227	0.	795.243	2.5315	
9	2,2-DIMETHYLPROP	0.030136	0.030136	0.	2.17422	0.006921	
1	HYDROGEN	0.	0.	0.	0.	0.	
46	NITROGEN	0.	0.	0.	0.	0.	
101	109 F ABP	10.3886	10.3886	0.	809.849	2.3859	
102	135 F ABP	20.2506	20.2506	0.	1691.65	4.6508	
103	160 F ABP	23.1094	23.1094	0.	2066.67	5.3074	
104	185 F ABP	25.1326	25.1326	0.	2404.07	5.7720	
105	210 F ABP	40.1950	40.1950	0.	4111.31	9.2313	
106	235 F ABP	33.5939	33.5939	0.	3667.54	7.7153	
107	260 F ABP	22.6523	22.6523	0.	2637.78	5.2024	
108	285 F ABP	35.9907	35.9907	0.	4475.33	8.2657	
109	310 F ABP	26.0029	26.0029	0.	3439.92	5.9719	
110	335 F ABP	18.1250	18.1250	0.	2551.06	4.1626	
111	360 F ABP	12.3525	12.3525	0.	1847.95	2.8369	
112	385 F ABP	8.96804	8.96804	0.	1424.01	2.0596	
113	410 F ABP	8.86201	8.86201	0.	1493.75	2.0353	
114	435 F ABP	8.65624	8.65624	0.	1547.20	1.9880	
115	460 F ABP	8.16612	8.16612	0.	1546.76	1.8755	
116	485 F ABP	7.98489	7.98489	0.	1600.96	1.8338	
117	510 F ABP	7.49467	7.49467	0.	1589.55	1.7212	
118	535 F ABP	6.96207	6.96207	0.	1560.25	1.5989	
119	560 F ABP	6.90989	6.90989	0.	1634.64	1.5869	
120	585 F ABP	6.52052	6.52052	0.	1627.47	1.4975	
121	610 F ABP	5.39142	5.39142	0.	1418.17	1.2382	
122	635 F ABP	4.98878	4.98878	0.	1382.32	1.1457	
123	660 F ABP	4.69150	4.69150	0.	1367.51	1.0775	
124	685 F ABP	4.47548	4.47548	0.	1371.39	1.0278	
125	710 F ABP	4.22257	4.22257	0.	1359.31	0.96977	
126	747 F ABP	7.63914	7.63914	0.	2642.49	1.7544	
127	797 F ABP	6.65126	6.65126	0.	2524.59	1.5275	

Page Break

+++ SOLUTION NOT REACHED +++

ID	COMPONENT NAME	TOTAL LBMOL	LIQUID LBMOL	VAPOR LBMOL	TOTAL LB	TOTAL MOL PCT	KVALUE
128	847 F ABP	5.55021	5.55021	0.	2303.71	1.2747	
129	897 F ABP	4.19372	4.19372	0.	1897.55	0.96314	
130	947 F ABP	3.64221	3.64221	0.	1789.15	0.83648	
131	997 F ABP	2.79676	2.79676	0.	1486.80	0.64231	
132	1068 F ABP	4.00327	4.00327	0.	2364.37	0.91940	
TOTAL		435.422	427.868	0.	67812.1	100.000	
TOTAL LB		67812.1	67676.0	0.			

STREAM NUMBER 5
TEMPERATURE DEG F 99.811
PRESSURE PSIA 14.696
ENTHALPY BTU/HR -8.24510E+06
VAPOR FRACTION 0.00000E+00

PROPERTIES	TOTAL	LIQUID *	WATER
FLOWRATE LBMOL/HR	435.4217	427.8676	7.5541
MOLECULAR WT.	155.7388	158.1704	18.0153
ENTHALPY BTU/LBMOLE	-18935.8886	-18949.8205	-18147.5053
ENTROPY BTU/LBMO/R	-14.6319	-14.3800	-28.9044
CP BTU/LBMOL/R		77.4919	17.9975
CV BTU/LBMOL/R		71.2880	17.5859
CP/CV		1.0870	1.0234
DENSITY LB/FT3		48.0245	61.9956
Z-FACTOR		0.008063	0.7114E-03
FLOWRATE BBL/DAY T-P		6024.1139	9.3839
BBL/DAY STP		5806.6732	9.3273
S.G.(TS/60) GPA STP		0.798820	1.0000
VISCOSITY CP		1.1189	0.682738
TH.COND BTU/FT/HR/F		0.077985	0.362422
SURFACE TENSION DYNE/CM		23.6050	70.3020

STREAM CRITICAL TEMPERATURE (KAY'S RULE) F 655.
CRITICAL PRESSURE (PRAUSNITZ-GUNN) PSIA 336.

* LIQUID PROPERTY CALCULATIONS EXCLUDES FREE WATER

Page Break

+++ SOLUTION NOT REACHED +++
STREAM NUMBER 5 ASOA K-VALUES ASOA ENTHALPY
NAME: Crude Feed
CONNECTING M-1 -P-2
1 - 2

FLOWRATE OF IMMISCIBLE WATER 7.5541 LBMOL/HR
136.09 LB/HR
ENTHALPY OF IMMISCIBLE WATER -1.37088E+05 BTU/HR

LIQUID PORTION OF STREAM 5

		LBMOL/HR	LB/HR	BBL/DAY
1	WATER	0.54526	9.8231	0.67276
2	ETHANE	0.13689	4.1161	0.70669
3	PROPANE	1.9820	87.394	11.306
4	I-BUTANE	1.8115	105.28	12.414
5	N-BUTANE	7.2176	419.49	47.775
6	I-PENTANE	8.5573	617.38	66.053
7	N-PENTANE	11.023	795.24	84.309
8	2,2-DIMETHYLPROP	0.30136E-01	2.1742	0.24268
9	HYDROGEN	0.00000E+00	0.00000E+00	0.00000E+00
10	NITROGEN	0.00000E+00	0.00000E+00	0.00000E+00
11	109 F ABP	10.389	809.85	78.721
12	135 F ABP	20.251	1691.6	162.21
13	160 F ABP	23.109	2066.7	195.62
14	185 F ABP	25.133	2404.1	224.72
15	210 F ABP	40.195	4111.3	379.92
16	235 F ABP	33.594	3667.5	334.82
17	260 F ABP	22.652	2637.8	238.04
18	285 F ABP	35.991	4475.3	400.23
19	310 F ABP	26.003	3439.9	304.04

20	335	F	ABP	18.125	2551.1	223.13
21	360	F	ABP	12.352	1848.0	159.99
22	385	F	ABP	8.9680	1424.0	122.00
23	410	F	ABP	8.8620	1493.8	126.80
24	435	F	ABP	8.6562	1547.2	130.13
25	460	F	ABP	8.1661	1546.8	128.97
26	485	F	ABP	7.9849	1601.0	132.33
27	510	F	ABP	7.4947	1589.5	130.30
28	535	F	ABP	6.9621	1560.2	126.84
29	560	F	ABP	6.9099	1634.6	131.80
30	585	F	ABP	6.5205	1627.5	130.21
31	610	F	ABP	5.3914	1418.2	112.59
32	635	F	ABP	4.9888	1382.3	108.94
33	660	F	ABP	4.6915	1367.5	106.97
34	685	F	ABP	4.4755	1371.4	106.50
35	710	F	ABP	4.2226	1359.3	104.84
36	747	F	ABP	7.6391	2642.5	201.69
37	797	F	ABP	6.6513	2524.6	190.11
38	847	F	ABP	5.5502	2303.7	171.29
39	897	F	ABP	4.1937	1897.6	139.40
40	947	F	ABP	3.6422	1789.2	129.86
41	997	F	ABP	2.7968	1486.8	106.69
42	1068	F	ABP	4.0033	2364.4	166.92
				---	---	---
				427.87	67676.	5730.1

TEMP = 99.811 F
PRES = 14.696 PSIA
ENTH = -0.82451E+07 BTU/HR
MOL WT = 158.17

Page Break

+++ SOLUTION NOT REACHED +++
(WATER-FREE BASIS FOR CUMULATIVE VOLUME PERCENTS AND DISTILLATION CURVES)

NO	COMPONENTS	VOL PCT	CUM VOL	LABORATORY DISTILLATION VOL	API	DEG F TBP	D 86 ASTM
1	WATER	0.000	0.00	2.	94.8	85.22	153.12
2	ETHANE	0.014	0.01	5.	72.9	113.75	171.55
3	PROPANE	0.203	0.22	10.	67.5	160.22	201.57
4	I-BUTANE	0.221	0.44	20.	62.1	213.98	242.97
5	N-BUTANE	0.847	1.29	30.	57.8	258.76	277.45
6	I-PENTANE	1.166	2.46	40.	54.3	301.85	313.31
7	N-PENTANE	1.487	3.94	50.	49.5	361.22	362.72
8	2,2-DIMETHYLPROP	0.004	1.29	60.	41.9	470.95	461.48 *
9	HYDROGEN	0.000	0.00	70.	35.5	581.35	560.84
10	NITROGEN	0.000	0.00	80.	29.1	711.02	677.53 *
11	109 F ABP	1.385	5.33	90.	22.6	863.77	815.02
12	135 F ABP	2.850	8.18	95.	18.7	968.24	870.40 *
13	160 F ABP	3.433	11.61	98.	15.8	1051.62	914.59 *
14	185 F ABP	3.940	15.55	* = AN EXTRAPOLATIVE VALUE			
15	210 F ABP	6.655	22.21				
16	235 F ABP	5.861	28.07				
17	260 F ABP	4.164	32.23				
18	285 F ABP	6.996	39.23				
19	310 F ABP	5.312	44.54				
20	335 F ABP	3.896	48.43				
21	360 F ABP	2.792	51.23				
22	385 F ABP	2.128	53.35				
23	410 F ABP	2.211	55.57				
24	435 F ABP	2.268	57.83				
25	460 F ABP	2.247	60.08				
26	485 F ABP	2.305	62.39				

LIQUID PROPERTIES

TEMPERATURE F	=	99.811
PRES. PSIA	=	14.696
ENTH. BTU/HR	=	-0.82451E+07
MOLECULAR WEIGHT	=	158.35
Z-FACTOR T,P	=	0.80724E-02
LB/FT3 T,P	=	48.016
US GPM T,P	=	175.70
GAL/MOLE STP	=	23.777

27	510	F	ABP	2.268	64.65	S.G.	STP	=	0.79873
28	535	F	ABP	2.208	66.86	BBSPD	STP	=	5806.0
29	560	F	ABP	2.293	69.15	DEG API	STP	=	45.655
30	585	F	ABP	2.265	71.42	LB/GAL	STP	=	6.6597
31	610	F	ABP	1.958	73.38	LB/BBL	STP	=	279.71
32	635	F	ABP	1.894	75.27	UOPK		=	12.012
33	660	F	ABP	1.859	77.13	FLASH PT PM F		=	-26.191
34	685	F	ABP	1.851	78.98	MABP DEG	F	=	353.30
35	710	F	ABP	1.822	80.80	VABP DEG	F	=	443.52
36	747	F	ABP	3.504	84.31	COND.	BTU/FT/H	=	0.77985E-01
37	797	F	ABP	3.302	87.61	SP HEAT	BTU/LB/F	=	0.48921
38	847	F	ABP	2.974	90.58	S.T. DYNES/CM		=	23.545
39	897	F	ABP	2.419	93.00	VS. CP	T	=	1.1189
40	947	F	ABP	2.253	95.25	CP	100F	=	1.1170
41	997	F	ABP	1.851	97.11	CP	210F	=	0.56117
42	1068	F	ABP	2.895	100.00	++ STP =60 DEG F,14.7 PSIA			
						* = AN EXTRAPOLATIVE VALUE			

TS IS STANDARD TEMPERATURE AT 60.00 DEG F

+++ SOLUTION NOT REACHED +++

STREAM NUMBER 21 CONNECTING (11) X-11
NAME: Strm 21 TO (0) PRODUCT
K-VALUES: ASOA ENTHALPY: ASOA DENSITY: STD FLOW RATES /HR
LIQ VISC: API LIQ THC: TEMA SUR TEN: HADD
FREE WATER LIQUID PHASE PROPERTIES CALCULATED BY STEAM TABLES.

ID	COMPONENT NAME	TOTAL LBMOL	LIQUID LBMOL	VAPOR LBMOL	TOTAL LB	TOTAL MOL PCT	KVALUE
62	WATER	0.044433	0.044241	0.	0.800482	0.12855	
3	ETHANE	0.	0.	0.	0.	0.	
4	PROPANE	0.	0.	0.	0.	0.	
5	I-BUTANE	0.	0.	0.	0.	0.	
6	N-BUTANE	0.	0.	0.	0.	0.	
7	I-PENTANE	.125E-15	.125E-15	0.	.901E-14	.361E-15	
8	N-PENTANE	.309E-15	.309E-15	0.	.223E-13	.895E-15	
9	2,2-DIMETHYLPROP	0.	0.	0.	0.	0.	
1	HYDROGEN	0.	0.	0.	0.	0.	
46	NITROGEN	0.	0.	0.	0.	0.	
101	109 F ABP	.107E-14	.107E-14	0.	.833E-13	.309E-14	
102	135 F ABP	.923E-14	.923E-14	0.	.771E-12	.267E-13	
103	160 F ABP	.509E-13	.509E-13	0.	.455E-11	.147E-12	
104	185 F ABP	.292E-12	.292E-12	0.	.280E-10	.846E-12	
105	210 F ABP	.269E-11	.269E-11	0.	.275E-09	.777E-11	
106	235 F ABP	.141E-10	.141E-10	0.	.154E-08	.407E-10	
107	260 F ABP	.647E-10	.647E-10	0.	.753E-08	.187E-09	
108	285 F ABP	.754E-09	.754E-09	0.	.938E-07	.218E-08	
109	310 F ABP	.438E-08	.438E-08	0.	.579E-06	.127E-07	
110	335 F ABP	.265E-07	.265E-07	0.	.372E-05	.765E-07	
111	360 F ABP	.169E-06	.169E-06	0.	.254E-04	.490E-06	
112	385 F ABP	.126E-05	.126E-05	0.	0.000199	.363E-05	
113	410 F ABP	.138E-04	.138E-04	0.	0.002320	0.000040	
114	435 F ABP	0.000164	0.000164	0.	0.029356	0.000475	
115	460 F ABP	0.002185	0.002185	0.	0.413807	0.006320	
116	485 F ABP	0.145464	0.145464	0.	29.1653	0.42084	
117	510 F ABP	2.99001	2.99001	0.	634.153	8.6503	
118	535 F ABP	2.77842	2.77842	0.	622.664	8.0382	
119	560 F ABP	2.75760	2.75760	0.	652.353	7.9779	
120	585 F ABP	2.60221	2.60221	0.	649.489	7.5284	
121	610 F ABP	2.15160	2.15160	0.	565.963	6.2247	
122	635 F ABP	1.99092	1.99092	0.	551.656	5.7599	
123	660 F ABP	1.87228	1.87228	0.	545.746	5.4166	
124	685 F ABP	1.78607	1.78607	0.	547.294	5.1672	
125	710 F ABP	1.68514	1.68514	0.	542.471	4.8752	
126	747 F ABP	3.04863	3.04863	0.	1054.57	8.8199	
127	797 F ABP	2.65438	2.65438	0.	1007.51	7.6793	

Page Break

+++ SOLUTION NOT REACHED +++

ID	COMPONENT NAME	TOTAL LBMOL	LIQUID LBMOL	VAPOR LBMOL	TOTAL LB	TOTAL MOL PCT	KVALUE
128	847 F ABP	2.21498	2.21498	0.	919.364	6.4081	
129	897 F ABP	1.67363	1.67363	0.	757.274	4.8419	
130	947 F ABP	1.45353	1.45353	0.	714.013	4.2052	
131	997 F ABP	1.11613	1.11613	0.	593.351	3.2290	
132	1068 F ABP	1.59762	1.59762	0.	943.574	4.6220	
TOTAL		34.5654	34.5652	0.	11331.9	100.000	
TOTAL	LB	11331.9	11331.8	0.			

STREAM NUMBER 21
TEMPERATURE DEG F 100.00
PRESSURE PSIA 114.70
ENTHALPY BTU/HR -1.26383E+06
VAPOR FRACTION 0.00000E+00

PROPERTIES	TOTAL	LIQUID *	WATER
FLOWRATE LBMOL/HR	34.5654	34.5652	0.1927E-03
MOLECULAR WT.	327.8378	327.8396	18.0153
ENTHALPY BTU/LBMOLE	-36563.5086	-36563.6249	-18139.3520
ENTROPY BTU/LBMO/R	-22.7302	-22.7302	-28.8995
CP BTU/LBMOL/R		154.5953	17.9901
CV BTU/LBMOL/R		149.2090	17.5753
CP/CV		1.0361	1.0236
DENSITY LB/FT3		54.8436	62.0121
Z-FACTOR		0.114170	0.005549
FLOWRATE BBL/DAY T-P		883.2756	0.2393E-03
BBL/DAY STP		874.0652	0.2379E-03
S.G.(TS/60) GPA STP		0.888584	1.0000
VISCOSITY CP		27.5552	0.681386
TH.COND BTU/FT/HR/F		0.076109	0.362691
SURFACE TENSION DYNE/CM		32.0161	70.2813

STREAM CRITICAL TEMPERATURE (KAY'S RULE) F 1018.
CRITICAL PRESSURE (PRAUSNITZ-GUNN) PSIA 197.

* LIQUID PROPERTY CALCULATIONS EXCLUDES FREE WATER

Page Break

+++ SOLUTION NOT REACHED +++
STREAM NUMBER 21 ASOA K-VALUES ASOA ENTHALPY
NAME: Strm 21
CONNECTING X-11-PROD
11 - C

FLOWRATE OF IMMISCIBLE WATER 1.92679E-04 LBMOL/HR
0.34712E-02 LB/HR
ENTHALPY OF IMMISCIBLE WATER -3.4951 BTU/HR

LIQUID PORTION OF STREAM 21

		LBMOL/HR	LB/HR	BBL/DAY
1	WATER	0.44241E-01	0.79701	0.54586E-01
2	ETHANE	0.00000E+00	0.00000E+00	0.00000E+00
3	PROPANE	0.00000E+00	0.00000E+00	0.00000E+00
4	I-BUTANE	0.00000E+00	0.00000E+00	0.00000E+00
5	N-BUTANE	0.00000E+00	0.00000E+00	0.00000E+00
6	I-PENTANE	0.12487E-15	0.90086E-14	0.96384E-15
7	N-PENTANE	0.30929E-15	0.22314E-13	0.23657E-14
8	2,2-DIMETHYLPROP	0.00000E+00	0.00000E+00	0.00000E+00
9	HYDROGEN	0.00000E+00	0.00000E+00	0.00000E+00
10	NITROGEN	0.00000E+00	0.00000E+00	0.00000E+00
11	109 F ABP	0.10684E-14	0.83290E-13	0.80962E-14
12	135 F ABP	0.92311E-14	0.77113E-12	0.73944E-13
13	160 F ABP	0.50923E-13	0.45540E-11	0.43105E-12
14	185 F ABP	0.29244E-12	0.27974E-10	0.26148E-11
15	210 F ABP	0.26866E-11	0.27480E-09	0.25393E-10
16	235 F ABP	0.14083E-10	0.15374E-08	0.14036E-09
17	260 F ABP	0.64650E-10	0.75283E-08	0.67938E-09
18	285 F ABP	0.75424E-09	0.93787E-07	0.83874E-08
19	310 F ABP	0.43751E-08	0.57878E-06	0.51155E-07

20	335	F	ABP	0.26453E-07	0.37232E-05	0.32565E-06
21	360	F	ABP	0.16946E-06	0.25352E-04	0.21948E-05
22	385	F	ABP	0.12556E-05	0.19937E-03	0.17080E-04
23	410	F	ABP	0.13764E-04	0.23201E-02	0.19694E-03
24	435	F	ABP	0.16424E-03	0.29356E-01	0.24691E-02
25	460	F	ABP	0.21847E-02	0.41381	0.34502E-01
26	485	F	ABP	0.14546	29.165	2.4107
27	510	F	ABP	2.9900	634.15	51.983
28	535	F	ABP	2.7784	622.66	50.619
29	560	F	ABP	2.7576	652.35	52.598
30	585	F	ABP	2.6022	649.49	51.963
31	610	F	ABP	2.1516	565.96	44.931
32	635	F	ABP	1.9909	551.66	43.477
33	660	F	ABP	1.8723	545.75	42.690
34	685	F	ABP	1.7861	547.29	42.503
35	710	F	ABP	1.6851	542.47	41.838
36	747	F	ABP	3.0486	1054.6	80.489
37	797	F	ABP	2.6544	1007.5	75.870
38	847	F	ABP	2.2150	919.36	68.359
39	897	F	ABP	1.6736	757.27	55.631
40	947	F	ABP	1.4535	714.01	51.826
41	997	F	ABP	1.1161	593.35	42.578
42	1068	F	ABP	1.5976	943.57	66.614
				---	---	---
				34.565	11332.	866.47

TEMP = 100.00 F
PRES = 114.70 PSIA
ENTH = -0.12638E+07 BTU/HR
MOL WT = 327.84

Page Break

+++ SOLUTION NOT REACHED +++
(WATER-FREE BASIS FOR CUMULATIVE VOLUME PERCENTS AND DISTILLATION CURVES)

NO	COMPONENTS	VOL PCT	CUM VOL	LABORATORY DISTILLATION VOL	API	DEG F TBP	D 86 ASTM
1	WATER	0.000	0.00	2.	40.2	499.25	535.62
2	ETHANE	0.000	0.00	5.	39.1	516.71	545.05
3	PROPANE	0.000	0.00	10.	37.9	537.76	556.43
4	I-BUTANE	0.000	0.00	20.	35.6	579.42	586.74
5	N-BUTANE	0.000	0.00	30.	33.2	625.04	619.94
6	I-PENTANE	0.000	0.00	40.	30.7	675.22	661.64
7	N-PENTANE	0.000	0.00	50.	28.3	727.07	704.73
8	2,2-DIMETHYLPROP	0.000	0.00	60.	25.9	781.63	753.72
9	HYDROGEN	0.000	0.00	70.	23.5	840.44	806.52
10	NITROGEN	0.000	0.00	80.	20.8	911.21	874.33
11	109 F ABP	0.000	0.00	90.	17.7	998.44	957.92
12	135 F ABP	0.000	0.00	95.	15.7	1055.04	1003.55
13	160 F ABP	0.000	0.00	98.	14.5	1089.01	1030.93
14	185 F ABP	0.000	0.00	* = AN EXTRAPOLATIVE VALUE			
15	210 F ABP	0.000	0.00				
16	235 F ABP	0.000	0.00				
17	260 F ABP	0.000	0.00				
18	285 F ABP	0.000	0.00				
19	310 F ABP	0.000	0.00				
20	335 F ABP	0.000	0.00				
21	360 F ABP	0.000	0.00				
22	385 F ABP	0.000	0.00				
23	410 F ABP	0.000	0.00				
24	435 F ABP	0.000	0.00				
25	460 F ABP	0.004	0.00				
26	485 F ABP	0.279	0.28				

LIQUID PROPERTIES

TEMPERATURE F	=	100.00
PRES. PSIA	=	114.70
ENTH. BTU/HR	=	-0.12638E+07
MOLECULAR WEIGHT	=	328.24
Z-FACTOR T,P	=	0.11429
LB/FT3 T,P	=	54.845
US GPM T,P	=	25.758
GAL/MOLE STP	=	44.307

27	510	F	ABP	6.012	6.30	S.G.	STP	=	0.88851
28	535	F	ABP	5.852	12.15	BBSPD	STP	=	874.01
29	560	F	ABP	6.079	18.23	DEG API	STP	=	27.756
30	585	F	ABP	6.004	24.23	LB/GAL	STP	=	7.4082
31	610	F	ABP	5.190	29.42	LB/BBL	STP	=	311.15
32	635	F	ABP	5.021	34.44	UOPK		=	11.957
33	660	F	ABP	4.929	39.37	FLASH PT PM F		=	290.64
34	685	F	ABP	4.907	44.28	MABP DEG	F	=	695.59
35	710	F	ABP	4.829	49.11	VABP DEG	F	=	729.11
36	747	F	ABP	9.288	58.40	COND.	BTU/FT/H	=	0.76109E-01
37	797	F	ABP	8.753	67.15	SP HEAT	BTU/LB/F	=	0.47120
38	847	F	ABP	7.884	75.03	S.T. DYNES/CM		=	31.967
39	897	F	ABP	6.414	81.45	VS. CP	T	=	27.569
40	947	F	ABP	5.973	87.42	CP	100F	=	27.552
41	997	F	ABP	4.906	92.33	CP	210F	=	5.3031
42	1068	F	ABP	7.674	100.00	++ STP =60 DEG F,14.7 PSIA			
						* = AN EXTRAPOLATIVE VALUE			

TS IS STANDARD TEMPERATURE AT 60.00 DEG F

STREAM NUMBER 21
TEMPERATURE DEG F 100.00
PRESSURE PSIA 114.70
ENTHALPY BTU/HR -1.26383E+06
VAPOR FRACTION 0.00000E+00

PROPERTIES	TOTAL	LIQUID *	WATER
FLOWRATE LBMOL/HR	34.5654	34.5652	0.1927E-03
MOLECULAR WT.	327.8378	327.8396	18.0153
ENTHALPY BTU/LBMOLE	-36563.5086	-36563.6249	-18139.3520
ENTROPY BTU/LBMO/R	-22.7302	-22.7302	-28.8995
CP BTU/LBMOL/R		154.5953	17.9901
CV BTU/LBMOL/R		149.2090	17.5753
CP/CV		1.0361	1.0236
DENSITY LB/FT3		54.8436	62.0121
Z-FACTOR		0.114170	0.005549
FLOWRATE BBL/DAY T-P		883.2756	0.2393E-03
BBL/DAY STP		874.0652	0.2379E-03
S.G.(TS/60) GPA STP		0.888584	1.0000
VISCOSITY CP		27.5552	0.681386
TH.COND BTU/FT/HR/F		0.076109	0.362691
SURFACE TENSION DYNE/CM		32.0161	70.2813

STREAM CRITICAL TEMPERATURE (KAY'S RULE) F 1018.
CRITICAL PRESSURE (PRAUSNITZ-GUNN) PSIA 197.

* LIQUID PROPERTY CALCULATIONS EXCLUDES FREE WATER

Page Break

+++ SOLUTION NOT REACHED +++
STREAM NUMBER 21 ASOA K-VALUES ASOA ENTHALPY
NAME: Strm 21
CONNECTING X-11-PROD
11 - 0

FLOWRATE OF IMMISCIBLE WATER 1.92679E-04 LBMOL/HR
0.34712E-02 LB/HR
ENTHALPY OF IMMISCIBLE WATER -3.4951 BTU/HR

LIQUID PORTION OF STREAM 21

		LBMOL/HR	LB/HR	BBL/DAY
1	WATER	0.44241E-01	0.79701	0.54586E-01
2	ETHANE	0.00000E+00	0.00000E+00	0.00000E+00
3	PROPANE	0.00000E+00	0.00000E+00	0.00000E+00
4	I-BUTANE	0.00000E+00	0.00000E+00	0.00000E+00
5	N-BUTANE	0.00000E+00	0.00000E+00	0.00000E+00
6	I-PENTANE	0.12487E-15	0.90086E-14	0.96384E-15
7	N-PENTANE	0.30929E-15	0.22314E-13	0.23657E-14
8	2,2-DIMETHYLPROP	0.00000E+00	0.00000E+00	0.00000E+00
9	HYDROGEN	0.00000E+00	0.00000E+00	0.00000E+00
10	NITROGEN	0.00000E+00	0.00000E+00	0.00000E+00
11	109 F ABP	0.10684E-14	0.83290E-13	0.80962E-14
12	135 F ABP	0.92311E-14	0.77113E-12	0.73944E-13
13	160 F ABP	0.50923E-13	0.45540E-11	0.43105E-12
14	185 F ABP	0.29244E-12	0.27974E-10	0.26148E-11
15	210 F ABP	0.26866E-11	0.27480E-09	0.25393E-10
16	235 F ABP	0.14083E-10	0.15374E-08	0.14036E-09
17	260 F ABP	0.64650E-10	0.75283E-08	0.67938E-09
18	285 F ABP	0.75424E-09	0.93787E-07	0.83874E-08
19	310 F ABP	0.43751E-08	0.57878E-06	0.51155E-07

20	335	F	ABP	0.26453E-07	0.37232E-05	0.32565E-06
21	360	F	ABP	0.16946E-06	0.25352E-04	0.21948E-05
22	385	F	ABP	0.12556E-05	0.19937E-03	0.17080E-04
23	410	F	ABP	0.13764E-04	0.23201E-02	0.19694E-03
24	435	F	ABP	0.16424E-03	0.29356E-01	0.24691E-02
25	460	F	ABP	0.21847E-02	0.41381	0.34502E-01
26	485	F	ABP	0.14546	29.165	2.4107
27	510	F	ABP	2.9900	634.15	51.983
28	535	F	ABP	2.7784	622.66	50.619
29	560	F	ABP	2.7576	652.35	52.598
30	585	F	ABP	2.6022	649.49	51.963
31	610	F	ABP	2.1516	565.96	44.931
32	635	F	ABP	1.9909	551.66	43.477
33	660	F	ABP	1.8723	545.75	42.690
34	685	F	ABP	1.7861	547.29	42.503
35	710	F	ABP	1.6851	542.47	41.838
36	747	F	ABP	3.0486	1054.6	80.489
37	797	F	ABP	2.6544	1007.5	75.870
38	847	F	ABP	2.2150	919.36	68.359
39	897	F	ABP	1.6736	757.27	55.631
40	947	F	ABP	1.4535	714.01	51.826
41	997	F	ABP	1.1161	593.35	42.578
42	1068	F	ABP	1.5976	943.57	66.614
				---	---	---
				34.565	11332.	866.47

TEMP = 100.00 F
PRES = 114.70 PSIA
ENTH = -0.12638E+07 BTU/HR
MOL WT = 327.84

Page Break

+++ SOLUTION NOT REACHED +++
(WATER-FREE BASIS FOR CUMULATIVE VOLUME PERCENTS AND DISTILLATION CURVES)

NO	COMPONENTS	VOL PCT	CUM VOL	LABORATORY DISTILLATION VOL	API	DEG F TBP	D 86 ASTM
1	WATER	0.000	0.00	2.	40.2	499.25	535.62
2	ETHANE	0.000	0.00	5.	39.1	516.71	545.05
3	PROPANE	0.000	0.00	10.	37.9	537.76	556.43
4	I-BUTANE	0.000	0.00	20.	35.6	579.42	586.74
5	N-BUTANE	0.000	0.00	30.	33.2	625.04	619.94
6	I-PENTANE	0.000	0.00	40.	30.7	675.22	661.64
7	N-PENTANE	0.000	0.00	50.	28.3	727.07	704.73
8	2,2-DIMETHYLPROP	0.000	0.00	60.	25.9	781.63	753.72
9	HYDROGEN	0.000	0.00	70.	23.5	840.44	806.52
10	NITROGEN	0.000	0.00	80.	20.8	911.21	874.33
11	109 F ABP	0.000	0.00	90.	17.7	998.44	957.92
12	135 F ABP	0.000	0.00	95.	15.7	1055.04	1003.55
13	160 F ABP	0.000	0.00	98.	14.5	1089.01	1030.93
14	185 F ABP	0.000	0.00	* = AN EXTRAPOLATIVE VALUE			
15	210 F ABP	0.000	0.00				
16	235 F ABP	0.000	0.00				
17	260 F ABP	0.000	0.00				
18	285 F ABP	0.000	0.00				
19	310 F ABP	0.000	0.00				
20	335 F ABP	0.000	0.00				
21	360 F ABP	0.000	0.00				
22	385 F ABP	0.000	0.00				
23	410 F ABP	0.000	0.00				
24	435 F ABP	0.000	0.00				
25	460 F ABP	0.004	0.00				
26	485 F ABP	0.279	0.28				

LIQUID PROPERTIES

TEMPERATURE F	=	100.00
PRES. PSIA	=	114.70
ENTH. BTU/HR	=	-0.12638E+07
MOLECULAR WEIGHT	=	328.24
Z-FACTOR T,P	=	0.11429
LB/FT3 T,P	=	54.845
US GPM T,P	=	25.758
GAL/MOLE STP	=	44.307

27	510	F	ABP	6.012	6.30	S.G.	STP	=	0.88851
28	535	F	ABP	5.852	12.15	BBSPD	STP	=	874.01
29	560	F	ABP	6.079	18.23	DEG API	STP	=	27.756
30	585	F	ABP	6.004	24.23	LB/GAL	STP	=	7.4082
31	610	F	ABP	5.190	29.42	LB/BBL	STP	=	311.15
32	635	F	ABP	5.021	34.44	UOPK		=	11.957
33	660	F	ABP	4.929	39.37	FLASH PT PM	F	=	290.64
34	685	F	ABP	4.907	44.28	MABP DEG	F	=	695.59
35	710	F	ABP	4.829	49.11	VABP DEG	F	=	729.11
36	747	F	ABP	9.288	58.40	COND.	BTU/FT/H	=	0.76109E-01
37	797	F	ABP	8.753	67.15	SP HEAT	BTU/LB/F	=	0.47120
38	847	F	ABP	7.884	75.03	S.T.	DYNES/CM	=	31.967
39	897	F	ABP	6.414	81.45	VS. CP	T	=	27.569
40	947	F	ABP	5.973	87.42	CP	100F	=	27.552
41	997	F	ABP	4.906	92.33	CP	210F	=	5.3031
42	1068	F	ABP	7.674	100.00	++ STP =60 DEG F,14.7 PSIA			
						* = AN EXTRAPOLATIVE VALUE			

TS IS STANDARD TEMPERATURE AT 60.00 DEG F

+++ SOLUTION NOT REACHED +++

STREAM NUMBER 21 CONNECTING (11) X-11
NAME: Strm 21 TO (0) PRODUCT
K-VALUES: ASOA ENTHALPY: ASOA DENSITY: STD FLOW RATES /HR
LIQ VISC: API LIQ THC: TEMA SUR TEN: HADD
FREE WATER LIQUID PHASE PROPERTIES CALCULATED BY STEAM TABLES.

ID	COMPONENT NAME	TOTAL LBMOL	LIQUID LBMOL	VAPOR LBMOL	TOTAL LB	TOTAL MOL PCT	KVALUE
62	WATER	0.044433	0.044241	0.	0.800482	0.12855	
3	ETHANE	0.	0.	0.	0.	0.	
4	PROPANE	0.	0.	0.	0.	0.	
5	I-BUTANE	0.	0.	0.	0.	0.	
6	N-BUTANE	0.	0.	0.	0.	0.	
7	I-PENTANE	.125E-15	.125E-15	0.	.901E-14	.361E-15	
8	N-PENTANE	.309E-15	.309E-15	0.	.223E-13	.895E-15	
9	2,2-DIMETHYLPROP	0.	0.	0.	0.	0.	
1	HYDROGEN	0.	0.	0.	0.	0.	
46	NITROGEN	0.	0.	0.	0.	0.	
101	109 F ABP	.107E-14	.107E-14	0.	.833E-13	.309E-14	
102	135 F ABP	.923E-14	.923E-14	0.	.771E-12	.267E-13	
103	160 F ABP	.509E-13	.509E-13	0.	.455E-11	.147E-12	
104	185 F ABP	.292E-12	.292E-12	0.	.280E-10	.846E-12	
105	210 F ABP	.269E-11	.269E-11	0.	.275E-09	.777E-11	
106	235 F ABP	.141E-10	.141E-10	0.	.154E-08	.407E-10	
107	260 F ABP	.647E-10	.647E-10	0.	.753E-08	.187E-09	
108	285 F ABP	.754E-09	.754E-09	0.	.938E-07	.218E-08	
109	310 F ABP	.438E-08	.438E-08	0.	.579E-06	.127E-07	
110	335 F ABP	.265E-07	.265E-07	0.	.372E-05	.765E-07	
111	360 F ABP	.169E-06	.169E-06	0.	.254E-04	.490E-06	
112	385 F ABP	.126E-05	.126E-05	0.	0.000199	.363E-05	
113	410 F ABP	.138E-04	.138E-04	0.	0.002320	0.000040	
114	435 F ABP	0.000164	0.000164	0.	0.029356	0.000475	
115	460 F ABP	0.002185	0.002185	0.	0.413807	0.006320	
116	485 F ABP	0.145464	0.145464	0.	29.1653	0.42084	
117	510 F ABP	2.99001	2.99001	0.	634.153	8.6503	
118	535 F ABP	2.77842	2.77842	0.	622.664	8.0382	
119	560 F ABP	2.75760	2.75760	0.	652.353	7.9779	
120	585 F ABP	2.60221	2.60221	0.	649.489	7.5284	
121	610 F ABP	2.15160	2.15160	0.	565.963	6.2247	
122	635 F ABP	1.99092	1.99092	0.	551.656	5.7599	
123	660 F ABP	1.87228	1.87228	0.	545.746	5.4166	
124	685 F ABP	1.78607	1.78607	0.	547.294	5.1672	
125	710 F ABP	1.68514	1.68514	0.	542.471	4.8752	
126	747 F ABP	3.04863	3.04863	0.	1054.57	8.8199	
127	797 F ABP	2.65438	2.65438	0.	1007.51	7.6793	

Page Break

+++ SOLUTION NOT REACHED +++

ID	COMPONENT NAME	TOTAL LBMOL	LIQUID LBMOL	VAPOR LBMOL	TOTAL LB	TOTAL MOL PCT	KVALUE
128	847 F ABP	2.21498	2.21498	0.	919.364	6.4081	
129	897 F ABP	1.67363	1.67363	0.	757.274	4.8419	
130	947 F ABP	1.45353	1.45353	0.	714.013	4.2052	
131	997 F ABP	1.11613	1.11613	0.	593.351	3.2290	
132	1068 F ABP	1.59762	1.59762	0.	943.574	4.6220	
TOTAL		34.5654	34.5652	0.	11331.9	100.000	
TOTAL	LB	11331.9	11331.8	0.			