FOSSIL ENERGY

DOE/SW/41286-1
(OSTI ID: 5295)

COILED TUBING SAFETY MANUAL

Topical Report
January 1999

By
Walter Crow

April 1999

Work Performed Under Contract No. 75-97SW41286

Westport Technology Center
Houston, Texas

National Petroleum Technology Office
U. S. DEPARTMENT OF ENERGY
Tulsa, Oklahoma

DISCLAIMER

This report was prepared as an account of work sponsored by an agency of the United States Government. Neither the United States Government nor any agency thereof, nor any of their employees, makes any warranty, expressed or implied, or assumes any legal liability or responsibility for the accuracy, completeness, or usefulness of any information, apparatus, product, or process disclosed, or represents that its use would not infringe privately owned rights. Reference herein to any specific commercial product, process, or service by trade name, trademark, manufacturer, or otherwise does not necessarily constitute or imply its endorsement, recommendation, or favoring by the United States Government or any agency thereof. The views and opinions of authors expressed herein do not necessarily state or reflect those of the United States Government.

This report has been reproduced directly from the best available copy.

DOE/SW/41286-1
Distribution Category UC-122

Coiled Tubing Safety Manual

By
Walter Crow

April 1999

Work Performed Under Contract 75-97SW41286

Prepared for
U.S. Department of Energy
Assistant Secretary for Fossil Energy

John Ford, Project Manager
National Petroleum Technology Office
P.O. Box 3628
Tulsa, OK 74101

Prepared by
Westport Technology Center
6700 Portwest Dr.
Houston, TX 77024

Table of Contents

Section 1 Well Control Equipment 1

1.1 Blind Rams 1
1.2 Shear Rams 1
1.3 Slip Rams 2
1.4 Pipe Rams 2
1.5 Downhole Check Valves 2
1.6 Two Way Sealing Valve 2

Section 2 Well Control Equipment for Hydrogen Sulfide 2

Section 3 Guidelines for Planning Coiled Tubing Operations 2

3.1 General Considerations 2
3.2 Coiled Tubing Considerations 3
Fatigue History 3
Location and De-Rating of Field Butt Wells 3
Corrosiove Fluid History 3
Surface Damage 4
3.3 Well Operations 5
3.3.1 Initial Coiled Tubing Entry 5
3.3.2 Cleanouts 5
Lost Circulation and Bridges 5
Horizontal Well Cleanouts--A Special Problem 5
Fluid Viscosity Degradation 5
Returns to the Flowline 5

Section 4 Pressure Testing 6

4.1 Blowout Preventers 6
4.1.1 General Pre-Job Inspections 6
4.1.2 Function Test 6
4.1.3 Pressure Test 6
4.1.4 Minor Disassembly and Inspection 6
4.1.5 Disassembly and Inspection 6
4.2 Accumulator 6
4.3 Remote Hydraulic System Tie-In 7
4.4 General Requirements 7
4.5 Daily Pressure Test 7

4.6 Weekly BOP Function/Pressure Test 7

Section 5 Emergency Procedures 8

5.1 Power Pack Failure 8
5.2 Collapsed Coiled Tubing 8
5.2.1 Collapse with Coiled Tubing Shallow in the Well 8
5.2.2 Collapse with Coiled Tubing Deep in the Well 8
5.3 Coiled Tubing Stuck in the Hole 9
5.3.1 Friction Stuck Coiled Tubing 9
5.3.2 Mechanically Stuck 9
5.3.3 Mechanically Stuck without Circulation 10
5.4 Leak in Riser or Connections Below the Well Control Stack 10
5.5 Leak in the Coiled Tubing (Above the Stripper) 11
5.6 Leak in the Coiled Tubing Downhole 11
5.7 Buckled Coiled Tubing Between the Stripper and Injector 11
5.8 Uncontrolled Descent of Coiled Tubing 11
5.9 Uncontrolled Ascent out of the Well 12
5.10 Stripper Leaks 12
5.10.1 Small Stripper Leaks 12
5.10.2 Stripper Replacement 12
5.11 O-Ring Leaks 13

Section 6 Equipment Layout and Site Preparation 13

Appendix 1 Pressure Testing Time Table from Section 4 14

Diagram 1 Equipment Layout and Preliminary Steps of Pressure Test 15

Diagram 2 Equipment Rig Up and Pressure Test 16

Diagram 3 17

Bibliography 19-28

Foreward

This document addresses safety concerns regarding the use of coiled tubing as it pertains to the preservation of personnel, environment and the wellbore. The scope of this document is not intended to fully replace a standard practice manual or give full detail of all safety procedures. The main contribution of this document is to provide further depth to the broad scope of these basic practices to enhance the effectiveness of the industry. The practices discussed in this document pertain to a normally-pressured and low-pressure wells on land or on fixed platforms/caissons in open waters. Westport Technology and the authors of this document make no representation, warranty, or guarantee by publishing this material and hereby expressly disclaim any liability or responsibility for loss or damage resulting from its use or for the violation of any federal, state, or municipal regulation with which this publication may be in conflict.

Acknowledgement

Coiled tubing has been a technology available for over thirty years, however, the application and use has expanded significantly over the past 8 years due to improved materials, better handling, and transportation equipment. The expanded use has improved procedures and reliability, though varied between company and business sectors. A number of companies will benefit from access to the information contained in this manual and will be able to more reliably apply this technology to control costs. Westport greatly appreciates the U.S. Department of Energy, National Petroleum Technology Office, in Tulsa for supporting this project. The ultimate success will be measured through the transfer of this information to the industry, especially with the help of the Petroleum Technology Transfer Council (PTTC) through their valuable services to the industry.

We would like to express our thanks to the number of production operators, service companies, and individuals who contributed their valuable time, data, and experience to making this document. Finally, Westport wishes to acknowledge the efforts of Carl Cron, who was the original project manager. Carl passed away in 1998 during its development. It was Carl's vision that recognized the need for this manual and his strong persuasion that convinced a number of companies to contribute their information and ideas for this project.

Executive Summary

This document is provided to establish a general set of safety guidelines for coiled tubing intervention in low and normally-pressured wells. It is not intended to serve as an operations manual to accomplish the myriad of activities possible with this device. Rather, this manual hopes to add value for the production operator and service company by outlining the safety basics augmented by operational experience to preserve the well-being of personnel and to preserve the environment and investment in each well. The content assumes a certain amount of familiarity with operations by the managers, superintendents, engineers, and field personnel for whom this document was written. As per normal, the personnel involved with operations should have well control training and equipment operations experience. The manual is not intended to address coiled tubing operations in high pressure environment or coiled tubing drilling. This document has used some of the information outlined in API Recommended Practice 5C7 as well as the vast operational experience of some operators and their lessons learned. There are a number of quality documents which have served to make this well intervention method a high quality, dependable, and unique solution. Westport Technology is committed to expanding the educational experience of the industry through this document, workshops, and other manuals like the "Coiled Tubing Squeeze Cementing - Best Practices ®."

1.0 Well Control Equipment (Ref API RP 5C7)

The well control equipment will be used for primary well control and should be configured from the top to bottom as follows:

a. Stripper or annular-type presenter (An annular preventer can also be installed below the Blowout Preventer [BOP] stack depending on the operation.)
BOP (blowout preventer) Stack to consist of:
b. Blind ram (Optionally, use a blind/shear combination)
c. Shear ram (Optionally, use a blind/shear combination)
d. Kill line
e. Slip ram
f. Pipe ram
g. Flow tee and 2" – 5000 psi valve
h. Riser sections (optional depending on rig up configuration)
i. Two Way Sealing Valve (optional)

Notes:

• The blind and shear ram can be combined into a single component as well as the pipe and shear ram.

• The kill line will not be used to take returns from the wellbore. Instead, a flow tee should be mounted below the BOP stack for flowback.

• The master valve of the wellhead should never be closed to gain access to a well. If a swab valve is leaking, it should be repaired prior to rigging up coiled tubing equipment. Optionally, an additional two-way sealing valve can be added to the wellhead. Ideally, this valve should be capable of cutting the coiled tubing with minimal hanging weight.

• All connections from the wellhead to the BOP stack should be flanged connections. The BOP should be mounted as close as practical to the wellhead.

• Wellheads which have threaded connections (such as multiple-completions), should consider changing out the tree prior to the coiled tubing workover if at all possible. In the event it is impractical to change out this type of wellhead, two considerations are suggested. First, use a platform-style base to rest the weight of the coiled tubing which will minimize side-loading by the sway of crane support or independent legs. Second, incorporate a two-way sealing valve immediately above the swab valve that has demonstrated capability to cut the size, grade and maximum thickness of coiled tubing to be used. Flanged connections and ring gaskets should meet API Spec 16A Section III B and C. Quick-connections are only appropriate for use on the bottom of the stripper in low/normally pressured wells. When quick-connections are used, an additional o-ring is advised to be placed above the connection which can be rolled on in the event the original o-ring is cut.

• Some ram components have been known to shear fracture during a function/pressure test and have fallen into the wellbore during operations. The body of the rams themselves should be inspected periodically for integrity. The inside bore of the well control stack should be visually inspected after a function test of all rams to insure that they have actually retracted as shown by the indicator pins.

• A function test should be made individually for each ram to note that the appropriate ram has been actuated (to prevent accidentally switching hoses during rig up).

• Flow tees should have a flange connection on the outlet. Threaded connections do not effectively support the weight which is inherently applied to this section of the riser.

• Some well flowbacks will bring back sand from the wellbore which can erode the returns line. A visual and/or ultrasonic inspection should be performed to insure the surface piping is suitable for the operation.

• High coiled tubing rig ups above the wellhead can translate high bending forces with relatively minor movement from the injector head (even when supported by a crane or platform). A periodic check of the Christmas tree bolts is advisable to insure they have not worked loose during prolonged operations.

1.1 Blind Rams

Blind rams should be able to provide an effective seal from wellbore pressure below when the BOP bore is unobstructed. Equalizing valves should be used when opening the ram with differential pressure to prevent damage to the ram seal.

1.2 Shear Rams

Shear rams will be able to perform at least two cuts of the specified coiled tubing size at the rated working pressure of the well control stack. A function test of the shear rams should be made every 120 days. The condition of the blades should be verified after each cut. A test should be performed when using conductor cable or concentric tubing.

1.3 Slip Rams

Slip rams will be capable of being used at the rated working pressure of the well control stack to hold the coiled tubing when the pipe has a positive downward weight up to the value of minimum tensile pipe yield. They should also be capable of holding the pipe when there is negative weight (snubbing mode) to a value of 50% of the minimum tensile pipe yield.

1.4 Pipe Rams

Pipe rams should be able to provide an effective seal from wellbore pressure below for the appropriate size of coiled tubing. Equalizing valves should be used when opening the ram with differential pressure to prevent damage to the ram seal.

1.5 Downhole Check Valves

This is an optional item for use in the bottom hole assembly. However, if it is included, two valves should be used in conjunction (or a dual valve) for redundancy in the event of seal failure. Also, consideration should be given to the potential plugging tendency of various types of valves. Flapper type valves are less likely to plug because of greater cross-sectional flow area. However, spring-type valves usually have greater success in controlling wellbore fluid entry into the coiled tubing because of greater strength of the springs used in their construction. It should be noted that a flapper check valve will normally not act as a positive seal in most cases. Valve construction and maintenance greatly affect the potential to serve this purpose. Consideration should be given to valve type used if there will be greater operational risk from parted, collapsed or broken coil. These possibilities are always present to varying degrees in every operation, but should be weighed against the ability of the valve to provide a positive seal. Generally, a downhole check valve is used for all operations when reverse circulation will not be performed.

If a check valve is not used, a contingency plan should be prepared to handle the escape of wellbore fluids/gases at surface in the event of a coiled tubing failure.

1.6 Two Way Sealing Valve

Although this valve is not mandatory, it is strongly suggested to be included in the equipment inventory and the well control equipment. This will serve as an additional barrier above the swab valve of the wellhead. Many swab valves may have a slow leak and are not designed to hold pressure from above. This may complicate and extend the pressure test procedure. Additionally, this valve should be capable of cutting the coiled tubing with its gate and still effect a pressure seal.

2.0 Well Control Equipment for Hydrogen Sulfide Service

Well control equipment should comply with API Recommended Practice 53, Section 9, when the equipment may be exposed to fluids from hydrogen sulfide gas zones that could result in the partial pressure of hydrogen-sulfide exceeding 0.05 psia in the gas phase at the maximum anticipated pressure.

Also, liberated hydrogen sulfide gas in the returns may require routing them directly to the flowline and production facilities. Hydrogen sulfide detection monitors should be located near the returns pit in two locations depending on wind direction to facilitate detection.

3.0 Guidelines for Planning Coiled Tubing Operations

3.1 General Considerations

a. Review the well file and other pertinent data to identify any aspect of the completion or the well history that will affect the coiled tubing entry. A current completion schematic is critical. Identify the objective and prepare contingency plans. The success of any operation depends on input from all personnel involved and should be incorporated in the program design. Conduct a pre-job meeting with the contractor personnel. Determine equipment needs, including any possibilities for contingency operations.
b. The subsurface safety valve (SSSV) should be pulled if it is a wireline retrievable type. If it is not retrievable with wireline, it should be isolated to prevent closure during the job. It can be isolated with a check valve that is placed in-line with on (or near) the wellhead. The check valve should allow the hydraulic supply to remain connected in case there

is a slow seal leak downhole. The pressure in this line will increase due to thermal expansion and the check valve assembly should include a bleed to prevent over-pressuring the valve seals.

c. A gauge run to TD (total depth), with the largest drift possible, is usually made by wireline prior to running coiled tubing. The gauge run should include a tubing-end-locator (TEL), if an accurate TD is desired. Compare the gauge run TD tag to the TD referred to in the program and see if there is a significant difference and whether it will effect the program procedure.

d. Contingency plans should be in place. Hazard reviews should be conducted for all non-routine operations. Refer to API RP 5C7 (recommended practice for CT operations), Appendix C, Emergency Response and Contingency Planning.

e. Rig ups should be in compliance with the BOP Requirement, in Section 3, and Section 6.8 (Well Control Equipment) of API RP 5C7.

f. Refer to API RP 500B to ensure that all electrical codes are adhered to.

3.2 Coiled Tubing Considerations

a. Run predictive models to determine weight and CT forces. String weight is dependent on the length of CT, wellbore geometry, WHP (Wellead Pressure), fluids in the CT and tubing, and stripper psi. Run simulations for all of the anticipated conditions.

While RIH (Running in the hole) check actual weights against simulations. If there are significant differences determine the reason before proceeding further.

b. Coiled Tubing Condition

Fatigue History

- If there are high cycle areas it is suggested to check coiled tubing ovality while RIH. This can be done with a set of calipers and measuring the diameter in the x and y axis of the coil.
- A simplified way of measuring coiled tubing life is by tracking cumulative footage in one direction across the tubing guide arch. Some operators have adopted the policy of changing out the coiled tubing reel after a cumulative footage of 450,000 to 500,000 running feet has been reached.
- Computer programs are also available to track coiled tubing life and can be used for predicting tubing forces.
- Either method will require assumptions to be made for derating the coiled tubing for the type of operations performed.

Location and De-Rating of Field Butt Welds

- Strict QA/QC must be adhered to during the welding operations, and 50% fatigue de-rating of the weld is recommended.
- To effectively control the quality of each weld, periodic test welds should be done each 30-60 days by the individual welder and inspected by the coiled tubing manufacturer. For completeness, the non-destructive test and evaluation should accompany each weld during its review by the manufacturer. In this manner, both the weld and the inspection process can be scrutinized for procedure and judgement. Each welder should originally be certified by the coiled tubing manufacturer and use this process to maintain the required skills level. Alternatively, the coiled tubing manufacturer can provide skilled welders as a planned event, but is impractical for most field operations.
- The welds will be much more adversely affected by fatigue cycling than the base material. Therefore, they should be cut out and re-welded long before the life of the coiled tubing has been reached.
- It is not recommended to weld coiled tubing of diameter greater than 1.75" OD for use in well entry. The forces on the welded areas have greater associated risk for large diameter pipe when cycled through the drum, guide arch and injector head.

Corrosive Fluid History

If the CT has been stored for an extended period without proper purging and protection then internal corrosion is likely. After an acid job, it is recommended that the reel be flushed with a neutralizing solution (caustic soda or soda ash), inhibited and then purged with nitrogen. A cap (with a valve) should be placed on both ends to prevent loss of the nitrogen blanket. It

is not sufficient to flush with diesel after an acid job since this will not effectively dilute the acid, or stop it from spending itself on the coiled tubing. There are a wide variety of acid corrosion inhibitors whose temperature limit will affect the concentration to be used. An added measure of protection can be achieved by pumping a small volume of inhibitor through the coiled tubing prior to well entry.

Surface damage

Surface marks can reduce fatigue life by 50% (or more). Chain alignment and wear of the gripper blocks can cause this type of damage. It is critical that the tubing guide arch is properly aligned with the centerline that the coiled tubing takes through the injector chains. Most coiled tubing unit manufacturers suggest that this be done with approximately 1000' of coiled tubing in the hole when it is "pipe heavy". It is not sufficient to make this alignment with a solid bar while the injector is on the ground and being connected to the guide arch. This is typically difficult to do during operations since the injector head is difficult to access after it is rigged up and the job is in progress.

c. Does the CT need to be pigged or drifted prior to RIH? Determine if the coil had been welded recently and pigged afterward. Or, cement was pumped through the coil recently and wasn't sufficiently cleaned up afterwards.

d. Friction reducers can lower the circulating pressures encountered during a job and will ease the normal strain of operating conditions. The choice of reducers should be evaluated for the type of job performed. Formation damage can be an issue with these additives and may affect the performance of corrosion inhibitors.

e. CT safety factors:

Tensile: Generally 70-80% but is dependent on the overall risk level of the program.

Burst: Stay below 4000 psi circulating pressure in order to minimize pipe fatigue. Depending on the CT size and yield strength, higher pressures can be used under extreme circumstances. The maximum allowable static pressure should not be higher than the maximum test pressure and is typically no more than 4500 psi. When in static conditions consider the burst loading along the entire length of the string.

Collapse: Collapse rating is a function of tensile load and CT ovality. It is necessary to refer to stress ellipse diagrams which account for tensile loads; however, ovality is not considered. Ovality can dramatically reduce the collapse resistance. API RP5C7 (RP for Coiled Tubing Operations in Oil and Gas Well Services) has recently published collapse de-ratings for ovality (Table 6). Remember that the worst case collapse conditions aren't always at the surface.

f. A BHA (bottom hole assembly) diagram with all fishing dimensions should be made prior to RIH. Dual check valves should be run unless reversing operations are anticipated. The check valves prevent flow up the CT in the event that a leak develops at surface. It is also generally a good idea to run a hydraulic disconnect. Ensure that the BHA does not have any square shoulders that could hang up when POOH (pulling out of the hole).

g. Coiled tubing failures can occur while snubbing into high pressure wells (approximately 1500 psi or greater). Negative weights combined with operator error and weight indicator malfunction can result in crimped CT in large lubricators or between the stripper and the injector chains. Injector pressure should be selected to balance between potential for damaging the coiled tubing if an obstruction is encountered and the possibility of being blown out of the hole if the chains lose the ability to grip the pipe.

h. Running speeds should be dependent on well conditions and operator experience. Recommended maximums are 100 fpm into the hole and 150 fpm out of the hole, slowing down at any restrictions. Lower values can be used depending on well conditions and/or company policy.

i. It is recommended to pump at least minimum rate while in the hole to keep the coil full. With the CT overbalanced relative to the tubing, the fluids will drain. A dry coil with checks in place can then be subject to collapse.

3.3 Well Operations

3.3.1 Initial Coiled Tubing Entry

Coiled tubing well entry will be easier if WHP is reduced below 1800 psi by pumping fluid into the well immediately prior to the RIH. If this is not possible or practical, evaluate the ability to grip the coiled tubing with the injector chains to prevent being blown out of the hole. As coiled tubing becomes "pipe heavy", this possibility decreases. Maximum applied weight at the end of the coiled tubing should not be higher than 3000 pounds to prevent permanently buckling the coiled tubing in wells that are vertical, or nearly vertical. In deviated wells, this figure may increase depending on the tubing force analysis and helical buckling tendency.

3.3.2 Cleanouts

On average, this is the most common use for coiled tubing in the industry. The preservation of the wellbore for the purpose of this discussion pertains to preventing stuck pipe and requires nearly complete transport of the solids to surface. To achieve this, the circulated fluid has to be pumped at a rate capable of overcoming the settling tendency of the solid particles obstructing the wellbore. Several factors can affect solids transport.

Lost Circulation and Bridges

Removal of a sand/solid bridge can create a temporary situation of lost circulation. This may allow the solids which have been brought only part of the way to surface to fall freely and stick the coiled tubing. Continuous movement of the coiled tubing will physically distribute the sand to prevent stuck pipe. It is important to continue to reestablish circulation. Also, the rate of penetration and control of the accumulated solids in the wellbore will help minimize the chance of sticking the coiled tubing. Therefore, a set penetration rate should be followed, independent of how "soft" the fill might be. A short trip should also be incorporated in the process to help remove the jetted solids. A calculation should also be made to monitor the total suspended solids at any given time to prevent accidental increase above the amount that can be supported by the fluid. Visually monitoring returns at surface is extremely helpful in identifying lost returns and responding by pulling the coiled tubing out of the hole.

Horizontal Well Cleanouts - A Special Problem

Solids are only required to settle the diameter of the completion before a bedding plane develops. One effective method to prevent becoming stuck in the horizontal section during a cleanout is to jet a limited interval (usually no more than 50 feet) and follow immediately with a short trip until the wellbore deviation decreases to 40° or less. Sand entry into this type of completion can be a sign of significant mechanical damage that could result in free-flowing sand and/or allow the coiled tubing to exit the completion. For this reason, it is advisable to use slim-hole assemblies to perform the cleanout.

Fluid Viscosity Degradation

Viscosity enhancement of water-based fluids or foam is a common practice to improve their ability to suspend and transport solids. Temperature, pressure and contamination with hydrocarbons can affect the ability of these products to perform their intended function. Xanthan or guar polymer gels are adversely affected by high temperature and hydrocarbon contamination, whereas nitrified foam is affected by temperature, pressure and hydrocarbon contamination. As the fill is removed to the level of the perforated interval, hydrocarbons can begin to contaminate the foam or gel without any indication at surface. As the gel viscosity decreases or the foam quality is lost, the solids settling velocity increases and can stick the coiled tubing.

Returns to the Flowline

Some operators have made it a policy to take returns directly to a flowline instead of an open tank to minimize potential environmental impact or personnel injury due to escaped gas/ hydrogen sulfide. In this situation, it is critical to have a method to monitor returns and sand content continuously to respond to lost returns and solids settling. The on-site production test separator or a sand separator will serve this function. The advantage of this option is to limit the amount of surface equipment and an added measure of safety in the returns flowback. The disadvantage is that returns fluid content/quality and sand concentration are difficult to sample effectively. Inline flowmeters will be susceptible to damage from small amounts of sand contained in the returns.

4.0 Pressure Testing (Inspection/Requirements/Procedure)

The generally accepted procedure is to pressure test with non-flammable, non-energized fluids. It is not recommended to pressure test with nitrogen gas. Leaks detected in this type of environment are slow to bleed down and have the potential for injury to personnel. Please refer to the chart in Appendix 1 for time-related reference of the following pressure testing guidelines.

4.1 Blowout Preventers

4.1.1 General Pre-Job Inspection

a. Check hoses for wear, kinks, worn spots, and general condition.
b. Confirm configuration of rams (i.e.; blind shear, pipe, slip ram placement).
c. Check BOP system operating pressure.
d. Confirm proper hydraulic fluid (summer/winter) is in use.
e. Check that all isolation valves are open.

4.1.2 Function Test

a. Should be performed before each job
b. Close and open each ram. Record time required to function. Be sure pipe rams are functioned on pipe and not empty bore.
c. Maximum allowable function time is 30 seconds. If longer than 30 seconds is required then the test is considered a failure and the unit should be returned to the shop until repairs are made.

4.1.3 Pressure Test

a. Should be performed weekly
b. Test each ram (from below) to 200 psi and to the rated working pressure of the BOP or X-mas tree, whichever is lower.
c. Pipe rams should be tested to lesser of BOP, X-mas tree, or collapse rating of pipe used for testing.
d. Test hydraulic cylinders (with hydraulic fluid) to BOP operating system pressure. Monitor opposing hydraulic chambers for leakage.

4.1.4 Minor Disassembly and Inspection

a. Time-related inspection
Should be performed at tubing change-out or every 30 days, whichever is less. BOP should be broken open and ram packers, ram seals, bonnet gaskets, slips, and shear blades visually inspected and replaced if worn or damaged. Slips and shear blades should be replaced if evidence of wear, flat spots, pitting, or corrosion is noted. Equalizing valve seals and packing should be changed.
b. Incident-related inspection
Should be performed each time shear rams or slip rams are used to hold or cut pipe.
Shear blades or slip inserts (whichever were used) should be replaced. Ram packers, ram seals, and bonnet gaskets should be inspected and replaced as needed.
c. Pre-job pressure test should be performed after each disassembly.

4.1.5 Disassembly and Inspection

a. Time-related Inspection
Should be performed every 12 months and should include complete disassembly of all BOP components. All seals and packing should be inspected and replaced if evidence of wear or damage is noted.
b. Incident-related inspection
Should be performed on the affected BOP component any time leakage is detected between hydraulic chambers or well/test fluid leaks through weep hole.
c. Pre-job pressure test should be performed after disassembly.

4.2 Accumulator

a. Sizing of Accumulator bottle system
The Accumulator bottle system should be sized to provide twice the necessary volume to open and close each ram in the BOP stack without lowering the Accumulator pressure to less than 200 psi above pre-charge pressure.
b. Recommended pre-charge and BOP operating pressure
The BOP operating pressure should be 2500-3000 psi with pre-charge pressure of 1000 psi.
c. Accumulator operation and safety recommendations
All Accumulator bottles should have valves for isolating

individual bottles from Accumulator system in event of leaks or damage.

Guards (removable) should be installed over the pre-charge connections of Accumulator bottles. Gauge and necessary connections for checking pre-charge pressure should be kept on unit.

d. Checking pre-charge pressure

Isolate Accumulator system from hydraulic system and closing unit. Drain hydraulic fluid from bottom of Accumulator bottles to hydraulic reservoir. Install gauge in top of bottles and check pre-charge pressure. Pressure should not be lower than 950 psi or greater than 1100 psi.

e. Isolation Valve

There should be an isolation valve between the Accumulator system and the main hydraulic source that can be closed to allow for testing of the Accumulator bottles.

4.3 Remote Hydraulic System Tie-In

a. Each unit shall have an easily accessible point to tie-in an auxiliary hydraulic source in the event of a total hydraulic system failure.

4.4 General Requirements

a. All personnel on unit should be familiar with operation, maintenance, and repair of Blow-Out Preventers, Accumulator, and Closing Unit.
b. An Instruction / Operation Manual (with schematic drawings) for the BOP stack in use on that unit and a record book of BOP tests and repairs should be kept on the unit.

4.5 Daily Pressure Test

a. With the end of the coil above the BOPs, pressure up to 400 psi through the coil, for the low pressure test. This will apply pressure to and test the surface lines, coil, pack-off, BOPs, lubricator, and the tree connection. Hold for 5 minutes and inspect all connections for visible leaks. When the low pressure test is OK, increase the pressure to 4000 psi for the high pressure test and hold for 10 minutes. Again, look for leaks and a pressure decline. If a significant pressure decline is seen, but no leaks are visible, the swab valve is leaking. A two way sealing valve may be needed to be placed below the BOPs since many wellhead valves are not designed to hold pressure from above. Bleed off the pressure when the test is OK. This pressure test should be performed before running in the hole on all jobs and as a first step during the weekly BOP pressure test.

4.6 Weekly BOP Function / Pressure Test

a. Perform step 1 above. Record the function and pressure test information.
b. With the end of the coil still above the BOPs, pressure through the coil to 400 psi and close the blind ram (or the top set of blind / shear rams). Bleed the pressure off from above the ram. The WHP should read 400 psi and the lubricator pressure (CTP) should read zero. Hold the low-pressure test for 5 minutes. Open the blind ram (or the top blind / shears) and pressure through the coil to 4000 psi, close the rams and bleed off the pressure above the them. The WHP should read 4000 psi and the lubricator pressure should read zero. If the WHP drops, but the lubricator pressure remains zero, the swab valve is leaking.
c. Equalize the pressure across the blind rams and open the blinds. Check the shear rams (or the lower set of blind / shear rams) with the same procedure.
d. Run the coil into the BOP stack and lightly tag the closed swab valve gate and pick up 1 foot. Ensure that coiled tubing is across the pipe rams and that the right size of pipe rams are in the BOP's. Close the pipe rams. Pressure up through the coil to 400 psi. The coil pressure should read 400 psi and the lubricator pressure above the pipe rams should remain at zero. If the lubricator pressure remains zero, but the coil pressure bleeds off, the swab valve is leaking. This may be able to be corrected by greasing the valve, but may require a two way sealing valve to be installed below the BOPs.
e. Increase the pressure to 4000 psi for the high pressure test. The coil should remain at 4000 psi and the lubricator above the pipe rams should read zero.
f. Equalize across the pipe rams and then open them.
g. Function test the slips and record opening and closing times. The opening / closing times of all the BOP rams should also be recorded during the pressure testing. A closing time greater than 40 seconds is not acceptable (all the rams usually close in 5-15 seconds, times are longer in very cold conditions).

NOTE:

- Be careful when pressure testing that the coil is not subjected to a collapse pressure. This is especially true when check valves are installed. The bottom part of the coiled tubing should be visually inspected after the pipe ram pressure test to insure that it has not collapsed.
- Additionally, after step (e) of the BOP test, it is convenient to test the check valves if they are installed in the string. Bleed the pressure below the pipe rams to 2000 psi and then bleed off the CTP and see if the WHP follows. The CTP should be bled to around 100 psi and blocked-in. Watch to see if the CTP builds and the WHP drops.

If the BOPs function and pressure test OK, then install the fusible cap on the surface safety valve (SSV) and run in the hole (RIH).

5.0 Emergency Procedures

In each of the following conditions, when a ram is closed, it should also be locked manually to prevent accidental opening in the event of a hydraulic system pressure failure.

5.1 Power Pack Failure

a. Hang off coiled tubing in slips and manually lock.
b. Close pipe rams and manually lock.
c. Apply the reel brake if it is not fail-safe applied.
d. Maintain circulation if required.
e. Repair or replace he power unit and resume operations.

5.2 Collapsed Coiled Tubing

Coiled tubing will collapse whenever the differential pressure exerted against the OD exceeds the collapse limit of the pipe. This limit is also determined by the tensile load applied to the coiled tubing at the time and the overall condition of the pipe. A collapse condition generally occurs just below the stripper assembly and is often detected by a sharp increase in pump pressure while pumping down the coiled tubing.

When coiled tubing collapsed, it will flatten, resembling a thin oval cylinder with the center touching. This increase in OD is usually greater than the wear bushing ID in the stripper assembly, and the collapse will usually be halted at the stripper. If the collapsed portion does make it into the stripper assembly, be cautious of discharged pressure as the stripper element will not effectively seal on the pipe.

Note:

- Pipe should be checked periodically with calipers to determine the ovality while running in, or pulling out of the hole.
- Pipe with greater than 3% ovality should be derated or retired to prevent collapse during operations. The maximum acceptable is 6% which should not be run.
- Tubing integrity monitors can also be used to verify the condition of coiled tubing during operations.

5.2.1 Collapse with Coiled Tubing Shallow in the Well

a. Kill the well if it is not already dead.
b. Release the stripper element pressure, and remove the stripper elements and retaining bushings.
c. Pick up the coiled tubing slowly to determine the top of the collapsed pipe.
d. Attempt to pull the collapsed portion of pipe through the injector very slowly while adjusting the chain pressure to the orientation of the collapsed pipe. Spool the collapsed pipe onto the reel.
e. While pulling out of the hole slowly, watch for the transition section to undamaged pipe.
f. Reassemble the stripper assembly and finish pulling out of the hole.
g. Replace coiled tubing, and determine the cause of collapse before entering the well again.

5.2.2 Collapse with Coiled Tubing Deep in the Well.

a. Kill the well if it is not already dead.
b. Release the stripper element pressure, and remove the stripper elements and retaining bushings.
c. Pick up the coiled tubing slowly to determine the top of the collapsed pipe.
d. Run back into the hole with the coiled tubing until the undamaged portion of the pipe is across the well control stack components.
e. Close the pipe and slip rams, and manually lock.
f. Relax the injector chains to verify that the slip rams are holding.
g. Cut the coiled tubing above the injector.

h. Open the injector chains. Remove the injector from the coiled tubing, and set it off to the side.
i. Attach a full tube clamp to the coiled tubing directly above the well control stack.
j. Connect the crane or travelling block to the clamp and open the pipe and slip rams.
k. Slowly pull the coiled tubing out of the well to the maximum height of the crane or block.
l. Attach a collapsed tube clamp to the coiled tubing directly above the well control stack, and cut the tubing above the bottom clamp. Connect the crane, and pull the collapsed coiled tubing out of the well.
m. Continue alternating pulling, clamping, and cutting the coiled tubing until all of the collapsed section has been removed from the well and the transition section to undamaged pipe is located above the well control stack. Ensure that there is enough competent pipe above the well control stack to thread the coiled tubing through the stripper and injector.
n. Close the slip rams, and remove the clamp.
o. Install and secure the injector onto the coiled tubing. Apply hydraulic pressure to the inside chains, and switch the injector to the extraction mode Open the slip rams.
p. Either connect the end of the coiled tubing to the other section of coiled tubing on the reel with a connector or install a valve onto the end of the coiled tubing and begin a new wrap on the reel.
q. Reinstall the stripper bushings and elements.
r. Finish pulling out of the hole, and replace the reel. Determine the cause of collapse prior to entering the well again.

5.3 Coiled Tubing Stuck in the Hole

When the pipe is unable to be moved freely with a force of 80% of the tensile yield, the pipe is stuck due to one of two reasons. Friction sticking is due to a tortuous wellbore or buckled production tubing. Mechanical sticking can be the result of solids accumulation around the coiled tubing or downhole tools becoming lodged in the completion.

5.3.1 Friction Stuck Coiled Tubing

Preventing friction stuck coiled tubing begins in the job planning by identifying wellbore paths that have areas of dogleg severity (DLS) that can inhibit the free movement of pipe. Normally a relatively high DLS (10 – 15 deg/100') can be tolerated if it exists in an isolated area. However, if they are widespread in the completion, even a moderate DLS can frictionally stick the coiled tubing. The drag weigh forces can be modeled to determine if there will be a problem. While performing the operation, frequent weight checks (each 500') will help identify a problem before it becomes severe. This can also be a problem in dual or triple completions even if there is no obvious DLS problem.

a. Apply 80% of the tensile yield to the pipe and maintain that force for a minimum of 30 minutes.
b. If possible, continue to maintain circulation by pumping at low rate/pressure to minimize the coiled tubing pressure.
c. Pump friction-reducing additives such as polymer gel, diesel or beads down the coiled tubing or down the coiled tubing – production tubing annulus. If pumping down the CT/PT annulus, limit the pressure below the collapse rating of the coiled tubing.
d. Displace the well to heavier fluid to provide increased buoyancy.
e. Additional buoyancy can be achieved by displacing the coiled tubing to nitrogen. Note that collapse pressure conditions have increased when changing the fluid/gas displacement of the wellbore and coiled tubing.
f. Mechanical movement can be induced without the use of hydraulic jars in the tool string. See "Notes" at the end of Section 4.3.

5.3.2 Mechanically Stuck

If the weight indicator load does not decrease after applying a tensile load of up to 80% of pipe tensile yield rating, it is likely that the coiled tubing is mechanically stuck. Attempt to lower the coiled tubing into the well to determine if it is actually stuck at that point or if it is unable to pass through a restriction or upset in the completion pipe.

If the coiled tubing can be moved downward, then determine the following:

a. If the pipe (or tools) could have been bent or buckled by setting down excessive weight or running into an obstruction.
b. Review the well sketch for any obstructions or restrictions

that may present problems for movement of coiled tubing or downhole tools.

c. Mechanical movement can be induced without the use of hydraulic jars in the tool string. See "Notes" at the end of Section 5.3.

The following options may exist to retrieve the coil:

a. Continue circulation if possible.
b. Work the coil in the opposite direction from the way you were going, when it was discovered the coil was stuck. If a few feet of progress is made in that direction, begin working the coil back the other way. Try working the coil down a few feet, then try the up direction again. Gradually increase the overpull or set down weight in each cycle rather than going to maximums all at once.
c. Often times coil circulation is lost to the surface due to the solids buildup. If circulation can be attained across the solids build-up, consider pumping a high viscosity sweep to help string the solids out. The goal is to string out the solids to reduce the friction load so the coil can be moved. A "sand arch" around the coil has tremendous gripping power.
d. Avoid working the coil over the gooseneck with high coil pressure, as this drastically reduces the number of cycles that can be performed before suffering permanent coil fatigue (ballooned pipe). Check the coil history to get an idea how much the coil, which is currently across the gooseneck, has been worked on other jobs. Take careful note of any prior fishing jobs or stimulations where the coil has been reciprocated many times.
e. Try to increase the differential hydraulic pressure across the solids bridge by flowing the well harder, increasing gas lift or surging the well while continuing to work the coil.
f. If fluid can be injected, consider pumping in gas or nitrogen down the tubing-coiled tubing annulus to form a gas cap. Then surge the well down the wing valve to apply a high upward differential pressure across the problem debris, again while working the coiled tubing.
g. If fluid can be injected down the coiled tubing-tubing annulus, this can be used in conjunction with working the pipe. Avoid pumping at pressures close to the collapse rating of the coiled tubing.
h. Always keep track of coiled tubing cycles over the gooseneck. Do not work the pipe excessively if no progress is being made. Work to change the down hole conditions to increase the chances of freeing the pipe. Then resume working the pipe again.
i. Once progress is made, always continue circulating while working the pipe back up the hole slowly.
j. Consideration can be given to spotting acid across the problem debris if you feel it is even partially acid soluble.
k. A minor "mechanical movement" can be achieved without the use of jars by removing one of the three pump suction valves from the triplex pump to induce hydraulic jacking through the coiled tubing. The pulses created can contribute to solving both mechanical or friction stuck coiled tubing. <u>However, this option should be used with caution due to the inherent cycling effects imposed on the coiled tubing at surface.</u>

If the coil cannot be retrieved:

l. If there is a tool string that can be released, pump a ball to release the hydraulic disconnect if it is determined that the BHA is getting hung up.
m. Kill the well, cut the coiled tubing at the surface and run a free point tool to determine the depth to the stuck point. Follow normal fishing procedures to remove the coiled tubing.

5.3.3 Mechanically Stuck without Circulation

a. Pump the kill weight fluid down the coiled tubing. If it is not possible to pump down the coiled tubing, attempt to pump the kill weight fluid down the annulus (at pressures below the collapse pressure of the coiled tubing).
b. Cut the coiled tubing at surface and run a free-point tool. Follow normal fishing procedures.

5.4 Leak in Riser or Connections Below the Well Control Stack

a. This is usually manifested by a drop in pump pressure. It is advisable to verify the source of the problem before continuing with the job to minimize the potential problems.
b. Displace the coiled tubing with water or another kill weight fluid. This will help prevent oil/gas entry into the coil. Begin pulling out of the hole and continue pumping kill fluid through the coiled tubing. This will minimize the environmental

impact of fluid spray. If possible, use a covering to help contain the spray as the hole is brought above the well control stack. When the end of the coiled tubing reaches the well control stack, close the master valve and replace/repair the leading riser section.

c. Watch for the possibility of the coil not being able to pass the stripper bushing. This is a sign of severe damage and will require killing the well and cutting the coil.
d. If it is unsafe to pull out of the hole, with surface pressure present, kill the well. Resume pulling out of the hole.
e. Once the leak has cleared the well control stack, revert to the section "Leak in the Coiled Tubing (Above the Stripper)."

5.5 Leak in the Coiled Tubing (Above the Stripper)

Very high compressive loads can be achieved when first starting to RIH with coiled tubing, so extreme care should be taken to prevent crumpling the coiled tubing.

a. Stop moving the coil and shut down the pump.
b. Inspect the hole. If it is a pinhole, or if there is only minimal leakage or flow, continue to pull out of the hole. Placing the leak onto the drum will help contain the spill.
c. If the hole is large and leaks significantly, it may not be possible to continue spooling the coiled tubing. If the check valves hold pressure, the damaged section of the coiled tubing can be cut and reconnected to continue spooling. If the check valves do not hold or if they have not been used, pick up off bottom, set the slips and cut the coiled tubing with the shear rams (Note: Use the lower blind/shear rams if there are two sets in the well control stack).
d. Pick the coiled tubing up above the upper blind/shear ram and close the rams.
e. Initiate a kill procedure through the kill line (down the coiled tubing left hanging in the slips) to eliminate the surface pressure.
f. When the well is dead, pull out of the hole and repair or replace the coiled tubing string.

Note: If there is acid in the coil, it should be displaced to the wellbore with water while pulling out of the hole.

5.6 Leak in the Coiled Tubing Downhole

This condition is characterized by a decrease in pump pressure that could be caused by a leak in the coiled tubing connector (or bottom-hole assembly) or a leak in the coiled tubing itself. Either case can lead to a fish being left in the hole and jeopardize the completion.

a. Stop pumping and observe the pressure on the coiled tubing.
b. If there is no pressure on the annulus, then pull out of the hole while pumping slowly and repair or replace the coiled tubing or the downhole component of the tool string which caused the problem.
c. If the leak is found to be in the coiled tubing while pulling out of the hole, and it cannot safely continue to pull out of the hole, the well has to be killed.

5.7 Buckled Coiled Tubing Between the Stripper and Injector

a. Close the slip rams and manually lock them.
b. Close the pipe rams and manually lock them.
c. Close the shear rams and manually lock them. Cut the coiled tubing.
d. Pick up the coiled tubing 2 feet and close the blind rams.
e. Pull the coiled tubing out of the hole, and if necessary, kill the well to retrieve.

5.8 Uncontrolled Descent of Coiled Tubing

a. Apply additional pressure to the stripper assembly and simultaneously close the pipe rams.
b. Increase the velocity of the chains (in the same direction as the pipe) to closer match the speed of the coiled tubing "falling" into the well. This will help relieve the loss of friction between the chains and the pipe. Attempt to increase the injector's inside chain pressure to stop the uncontrolled movement of pipe.
c. Once the pipe has stopped falling through the chains, slowly reduce the chain speed and come to a complete stop.
d. Close the slip rams and manually lock them.
e. Once the pipe has stopped, close the pipe rams and inspect for damage to the chains or pipe.
f. Observe pump pressures and circulation rate to determine

if there is any damage to the bottom of the coiled tubing, such as a crimp, kinks, or buckling.

g. Pump the hydraulic cylinders open on the injector chain skates.
h. Inspect the chain blocks and remove any debris.
i. Reset the inside (and outside) chain pressures to the proper settings. Verify the proper alignment and spacing between the chains. If necessary, replace the chains or individual gripper blocks as necessary to prevent damage to the coiled tubing while pulling out of the hole. If no additional chains or gripper block inserts are available, the chains can be material on site to facilitate better grip. (Use material such as sodium chloride, potassium chloride, sand, etc.)
j. If the well is under control and there are no mechanical problems, then open the pipe rams and slip rams. Change the stripper element if necessary.
k. Pull out of the hole slowly to determine if the end of the coiled tubing can be pulled inside of the production tubing. Pull completely out of the hole to inspect the coiled tubing completely for external damage that may have been caused by the slips or chains during descent.

5.9 Uncontrolled Ascent Out of the Well

a. Apply additional pressure to the stripper assembly and simultaneously close the pipe rams.
b. Increase the velocity of the chains (in the same direction as the pipe) to closer match the speed of the coiled tubing "falling" into the well. This will help relieve the loss of friction between the chains and the pipe. Attempt to increase the injector's inside chain pressure to stop the uncontrolled movement of pipe.
c. If these attempts are unsuccessful put the injector motors in neutral and close the slip rms.
d. Once the pipe motion is halted, close the pipe rams and slips, if not already closed.
e. Pump the hydraulic cylinders open on the injector chain skates.
f. Inspect the chain blocks and remove any debris.
g. Reset the inside and outside chain pressures to the proper settings.
h. If the well is under control and there are no mechanical problems, then open the pipe rams and slip rams. Change the stripper element if necessary.
i. Reduce the hydraulic pressure on the stripper element and pick up the coiled tubing enough to inspect the areas of pipe held by the slips.
j. Determine whether it will be necessary to repair/replace that section of coiled tubing prior to resuming the pipe extraction. Be extremely cautious while checking the area of pipe held by the slips since the pipe may be weakened and may fail with high-surface pressure present.
k. Continue to pull out of the hole and close the master valve. Determine the cause for the uncontrolled movement of pipe prior to entering the well again. Replace or repair the coiled tubing string as required.

If the coiled tubing is blown out of the stripper assembly, close the blind rams and master valve as quickly as possible.

5.10 Stripper Leaks

Stripper leaks are a common occurrence and are affected by many factors such as stripper hardness, coil smoothness, effectiveness of the coil lubrication system, and the stripper pressure that is used. Without adequate lubrication, strippers can completely grip the coil while going in the hole. This can cause coil failure between the stripper and the injector head chains. The standard coil lubrication procedure used to consist of lubricating the coil with diesel at the spool. To reduce the environmental impact of dripping diesel on the ground, the stripper housing can be and fitted with a small lubrication orifice, so lubrication can be done right at the stripper. This has the advantage of placing the lubrication where it is needed and the disadvantage of not being able to visually verify adequate lubrication.

5.10.1 Small Stripper Leaks

If a small leak develops the stripper pressure can be increased until it stops. Do not allow even a small leak to continue, because it will cut the elements and become more severe.

If the leak cannot be stopped by stripper hydraulic pressure, and the coil cannot be pulled out, the stripper should be changed out immediately.

5.10.2 Stripper Replacement

a. Note the current string weight, set the slips on the coil, and either slack off coil weight or pick up (depending upon whether current weight is positive or negative) from 3000-5000 lbs to be sure the slips are holding. Manually lock in the slips.
b. Set the tubing rams and be sure the rams are holding by bleeding off above them. Manually lock the rams.
c. Bleed off the pressure in the well control stack through the kill line.
d. Change out the stripper as per the manufacturer's procedure.
e. Energize it to the proper pressure setting based on the wellhead pressure. The stripper can be pressure tested by pumping through the kill line.
f. Equalize the lubricator pressure with the wellhead pressure.
g. Unlock and open the tubing rams. Set the string weight to the previous value and unlock and open the tubing slips. Proceed with normal operations.

5.11 O-Ring Leaks

If an O-ring or chevron seal between the BOP stack and the stripper fails, always close the tubing rams first. The coil depth and leak severity should be considered when determining the next step.

a. Stop the coil and note the current string weight, set the slips on the coil.
b. Set the tubing rams and manually lock. Bleed off the lubricator.
c. Back off the quick union where the O-ring is leaking and walk the injector head up the tubing, by operating the injector as if running the coil in the hole slowly, while raising the trolley hoist, to help support the total injector head and guide arch weight.
d. Repair the O-ring with a standard O-ring patch kit or if a spare O-ring is already on the lubricator, roll it down into place.
e. Walk the injector head back down and make up the quick union.
f. Flow the well to decrease the WHP. Pressure test the new O-ring to a value comparable to the current wellhead pressure.
g. Set the string weight to the original setting. Unlock and open the slips.
h. Equalize across the tubing rams and open them. Pull out of the hole to change out the patched O-ring. If a spare O-ring was rolled into place, continue with CTU work.

6.0 Equipment Layout and Site Preparation

a. One of the best methods to minimize risk and reduce cost of an operation is to perform a wireline gauge run prior to running coiled tubing in a well.
b. Fluid and nitrogen pump discharge and pressure release valves should be directed away from normal personnel work areas.
c. Fluid pans should be used under all pieces of equipment.
d. Wellbore returns should be routed to surface tanks away from combustion sources or taken directly to a permanent flowline.
e. Sand or other solids should be disposed of in an environmentally approved method to prevent future contamination. Typically, solids will be washed to remove the hydrocarbons before being stored in a container for disposal. Care should be taken to monitor solids for radioactivity to determine any special disposal needs.
f. Liquid nitrogen tank and hoses should be protected from leaking which could affect platform decking and structural support.
g. Surface hydraulic master valves should be isolated with a lead fusible cap to prevent closing unless in the event of a fire.
h. Downhole hydraulic safety valves should be isolated at surface with a check valve mounted in-line on/near the wellhead. This will prevent inadvertent closure in the event of loss of hydraulic system pressure or if the valve seals have a slow leak.

Appendix 1

Pressure Testing Time-Table from Section 4

Type of Test	Pre-Job	Daily	Weekly	Monthly
General Inspection (Section 4.1.1)	On-site	Periodically during operation (especially BOP system pressure)		
Function Test (Section 4.1.2)	After rebuild BOP (in shop) During rig up		On-site for 7+ day operations	Shear rams to be tested with highest grade of CT to be used
Pressure Test (Section 4.1.3)	During rig up		On-site for 7+ day operations or, (after each incident)	
Minor Disassembly (Section 4.1.4)	Pre-job pressure test after each disassembly (Depending on severity of service, this should be performed each job)			30 day max between inspections (or after each incident)
Disassembly and Inspection (Section 4.1.5)	(Maximum time 12 months) or (after each incident)			

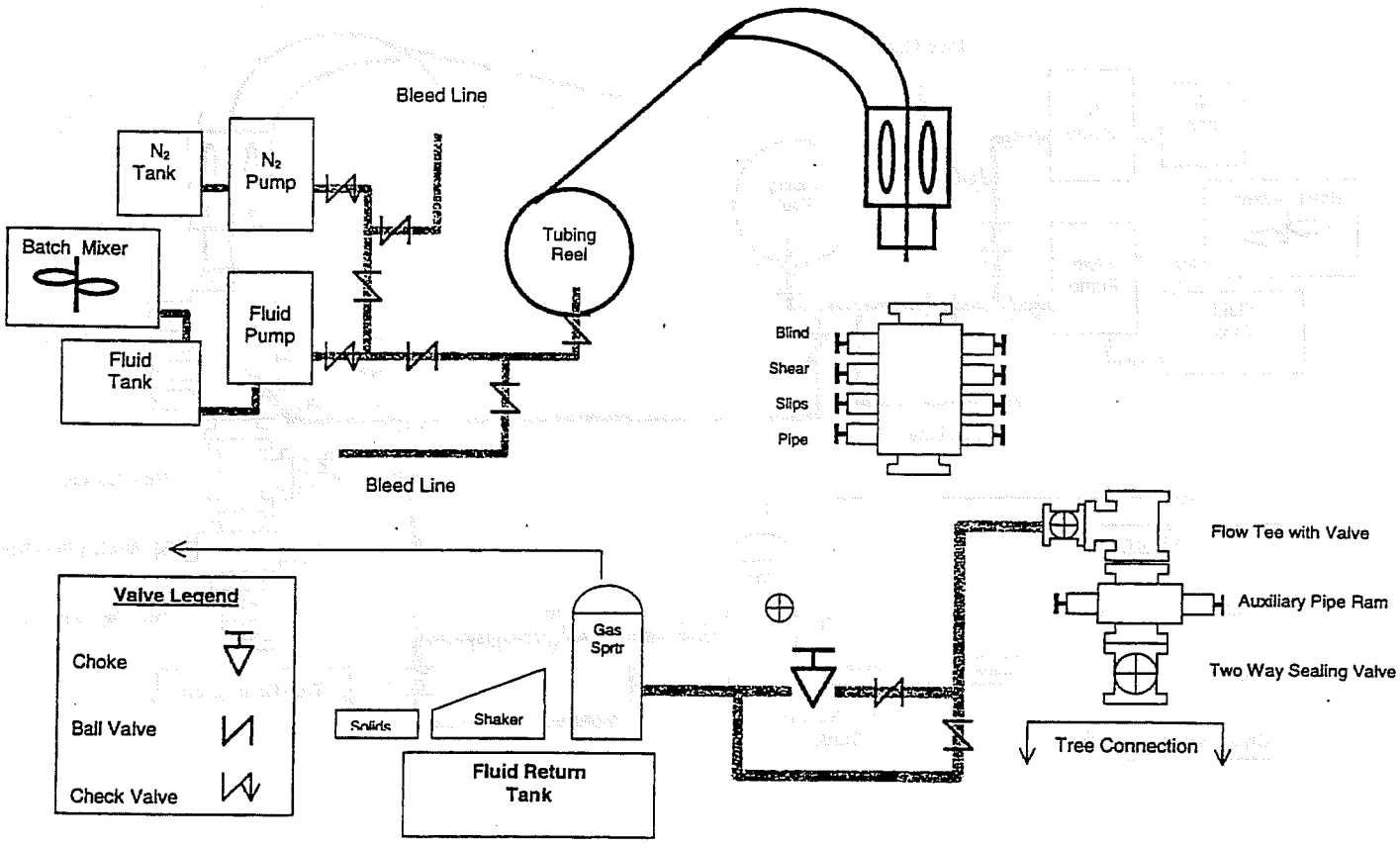

1. Stab the coiled tubing into the injector head. Insure proper alignment of the guide arch to the injector head. Improper alignment can severely damage the coiled tubing and injector chains. Inspect the stripper bushing to insure there is the proper clearance between it and the coiled tubing as defined by the manufacturer. Function test the stripper.
2. Connect the hydraulic hoses to the well control stack and perform a function test of each ram independently. Visually insure each ram control actually functions the proper ram and that each one fully retracts.
3. Position the two way sealing valve, optional pipe ram and flow tee on top of the well. Function test the pipe ram and visually inspect the bore to insure it fully retracts.

Diagram 1
Typical Equipment Layout
And
Preliminary Steps
of Pressure Test

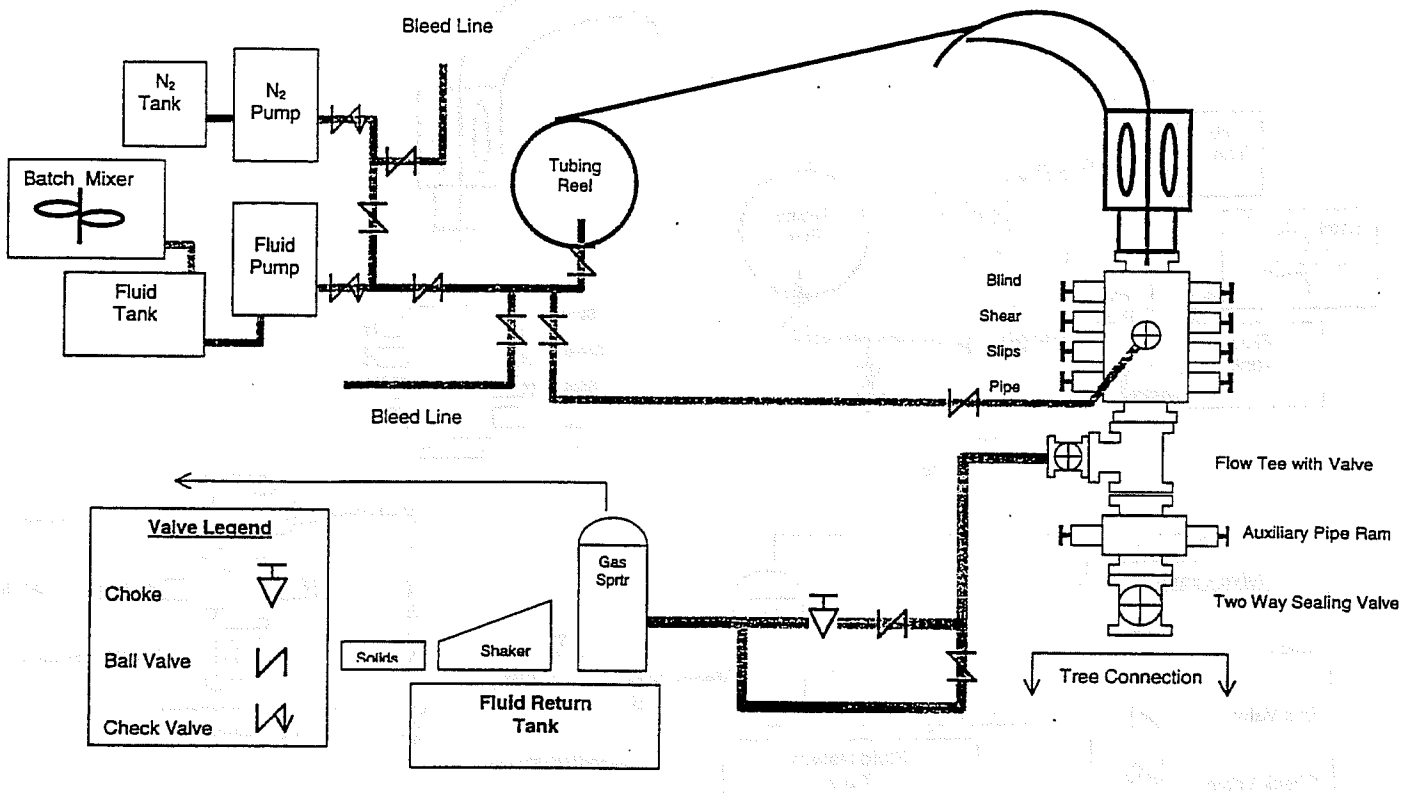

1. Position the coiled tubing injector head and BOPs over the well.
2. Perform system pressure test as per Section 4.
3. This shows the kill line attached for the rig ups that require it.

Diagram 2
Equipment Rig Up
And
Pressure Test

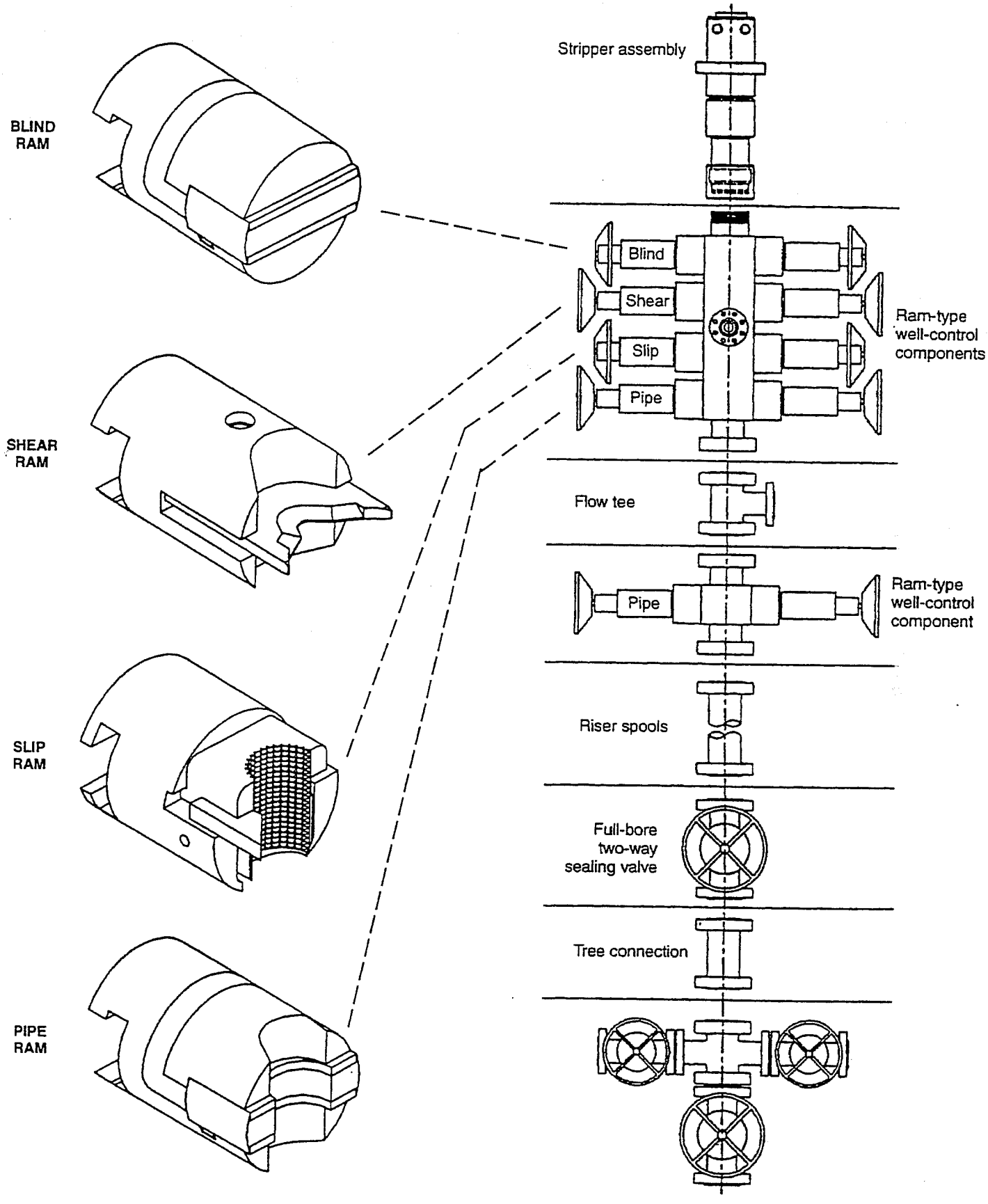
BLIND RAM
SHEAR RAM
SLIP RAM
PIPE RAM
Stripper assembly
Blind
Shear
Slip
Pipe
Ram-type well-control components
Flow tee
Pipe
Ram-type well-control component
Riser spools
Full-bore two-way sealing valve
Tree connection

Bibliography

Abdulkadir, R., and S. Krueger, Halliburton Energy Services Inc., and D. Aunger and J. McMullen, PanCanadian Petroleum. "Coiled Tubing as an Alternative to Service-Rig Completions for Multifractured Horizontal Wells in the Westrose Gas Fields in Alberta." SPE 46037, Coiled Tubing Roundtable, April 15-16, 1998.

Adams, Larry, Chevron USA (Midland). "Evaluation of Large Diameter Coiled Tubing for Subsurface Tubular Installations." Coiled Tubing Technology: Operations, Service, Practices, March 13-16, 1995.

Ali, Nazir, Tucker Drilling Services. "Short Radius Roatary Steerable Drilling." Coiled Tubing and Well Intervention Technology, Feb 9-11, 1998.

Angell, Paul P., BP Alaska. "Objectives and Results of Horizontal CT Workovers." Coiled Tubing and Well Intervention Technology, Feb 9-11, 1998.

Angell, Paul, BP Exploration (Anchorage). "Low-Cost Coiled Tubing Gas-Lift and Compact Platform BOP Deck CT Unit installations." Coiled Tubing Technology: Operations, Service, Practices, March 13-16, 1995.

Avakov, Vladimir A., and Jerry C. Foster, Halliburton Energy Services. "Coiled Tubing Life-Strain-Reliability Function." Coiled Tubing Technology: Operations, Services, Practices, March 29-31, 1994.

Avakov, Vladimir, Halliburton Energy Services. "Collapse Data Analysis and Coiled Tubing Limits." SPE 46004, Coiled Tubing Roundtable, April 15-16, 1998.

Badrak, R.P., Prescision Tube Technology. "High Strength Coiled Tubing." SPE 46052, Coiled Tubing Roundtable, April 15-16, 1998.

Bartlet, Paul, BP Exploration (Alaska). "Using Through-Tubing Whipstocks for CT Sidetracks." Coiled Tubing and Well Intervention Technology, Feb 9-11, 1998.

Baugh, Benton F., Radoil Tool Co. "Extended Reach Pipeline Blockage Remediation." Coiled Tubing and Well Intervention Technology Conference and Exhibition, Feb 4-6, 1997.

Bedford, S.A., BP Exploration and P. Divers, Transocean Well Services. "Coiled Tubing Operations in Northern North Sea, Magnus Field." Coiled Tubing Technology: Operations, Services, Practices, March 29-31, 1994.

Beynon, Douglas, and Daniel Thompson, Sonoma Corp. "Performance Comparison of Impact Drill-Jars with Conventional Downhole Motors." Coiled Tubing and Well Intervention Technology Conference and Exhibition, Feb 4-6, 1997.

Beynon, Douglas, Sonoma Corp. "New Bi-Directional Clean-Out Tool for Cleaning Obstructions Using CT." Coiled Tubing and Well Intervention Technology, Feb 9-11, 1998.

Blount, C.G., L.L. Gantt, D.D. Hern, M.B. Mooney, and B.E. Smith, ARCO Alaska; D. Quinn, Schlumberger Anadrill, and E.B. Larson, Schlumberger Dowell. "Development Update of an MWD Directional Drilling Package for 2 ¾" Opernhole: Tiny Tools." SPE 46016, Coiled Tubing Roundtable, April 15-16, 1998.

Blount, Curtis G., and C.M. (Mel) Hightower, ARCO Alaska. "Advancements in Coiled Tubing Drilling and Completions at Prudhoe Bay." Coiled Tubing Technology: Operations, Services, Practices, March 29-31, 1994.

Blount, Curtis G., Arco Alaska. "Though-Tubing Completion and Zonal Isolation of Coiled Tubing Drilled Drainholes." Coiled Tubing Technology: Operations, Service, Practices, March 13-16, 1995.
Blount, Curtis, ARCO Alaska, Inc. "Drilling with a 2 3/8-in. Collar OD MWD System." Coiled Tubing and Well Intervention Technology Conference and Exhibition, Feb 4-6, 1997.

Bond, Andrew J. Arco Alaska and BP Alaska authors. "Latex Acid Resistant Cement and Various New or Existing Placement Techniques." Coiled Tubing Technology: Operations, Service, Practices, March 13-16, 1995.

Braddick, Britt O., TIW Corp. and Knut Pedersen, Saga Petroleum. "New Design Thru-Tubing Retrievable Whipstock Integrated with Inner String Liner Cementing Concept." Coiled Tubing and Well Intervention Technology, Feb 9-11, 1998.

Brookley, T., J. Bird, and C. Garrett, Sun Drilling Products Corp. "Use of Drilling Fluid Additives to Improve Drilling and Remedial Operations with Coiled Tubing." Coiled Tubing Technology: Operations, Services, Practices, March 29-31, 1994.

Brown, Paul, Drexel Coiled Tubing Products Inc. "Calculate Coiled Tubing Fatigue in Real Time Using Computer Software." Coiled Tubing Technology: Operations, Service, Practices, March 13-16, 1995.

Buge, Phil, Baker Huges INTEQ. "Update on Fit-For-Purpose Coiled Tubing Drilling Units." Coiled Tubing and Well Intervention Technology Conference and Exhibition, Feb 4-6, 1997.

Burch, Douglas W., Gerald Loring and Randall Lagendyk, Hydraulic Well Control Inc. "Snubbing Quick Rig-Up Provides Economic Alternative for Well Intervention." Coiled Tubing and Well Intervention Technology Conference and Exhibition, Feb 4-6, 1997.

Chambers, Michael J., BP Exploration (Anchorage). "Laying Sand Plugs with Coiled Tubing." Coiled Tubing Technology: Operations, Services, Practices, March 29-31, 1994.

Chambers, Mike J., BP Alaska, Gregg S. Sanders and R.H. Lane, Arco Alaska. "Gas and Water Shutoffs Using Polymer Gel, Temperature Modeling and Coiled Tubing Placement in Alaska and the North Sea." Coiled Tubing Technology: Operations, Service, Practices, March 13-16, 1995.

Chitty, G.H., MG Nitrogen Services/Canadian Air Drilling Services Ltd. "Corrosion Issues with Underbalanced Drilling in H2S Reservoirs." SPE 46039, Coiled Tubing Roundtable, April 15-16, 1998.

Coats, Alan, Greg Clawson, Preeminent Energy Services, Tim Sargent and Joe Zimmerman, Samedon. "Coiled Tubing Resin Sand Control in a Gulf of Mexico High Pressure Gas Well." Coiled Tubing and Well Intervention Technology Conference and Exhibition, Feb 4-6, 1997.

Conrad, A.B., D.W. Morrison and Rufus Mullins, Halliburton Energy Services. "Effective Management of Coiled Tubing Workstrings." SPE 46034, Coiled Tubing Roundtable, April 15-16, 1998.

Coronado, M.P., Baker Oil Tools. "Development of an Internal Coiled Tubing Connector Utilizing Permanent Packer Technology." SPE 46036, Coiled Tubing Roundtable, April 15-16, 1998.

Courville, Perry and Vladimir Avakov, Halliburton Energy Services. "Coiled Tubing String Management." Coiled Tubing Technology: Operations, Services, Practices, March 29-31, 1994.

Crow, Walter, Crow Consulting and Perry Hill, BP Exploration. "Concentric Sandscreen Repair of a Horizontal Completion Failure: A Case History." Coiled Tubing Technology: Operations, Service, Practices, March 13-16, 1995.

Crow, Walter, Tucker Energy Services. "Risk Analysis and Project Evaluation for Remedial Operations." Coiled Tubing and Well Intervention Technology, Feb 9-11, 1998.

Dahl-Jorgensen, Einar, WeCem AS, and Knut Pedersen, Saga Petroleum. "Therma-Set Resin for Pressure Isolation of a Depleted Production Zone in a CTD Sidetrack." Coiled Tubing and Well Intervention Technology, Feb 9-11, 1998.

Divers, Denis, Transocean Petroleum Technology, "Hydraulic Workover Unit for Multiwell Platform Operations." Coiled Tubing and Well Intervention Technology Conference and Exhibition, Feb 4-6, 1997.

Doermus, Denis, Dowell Schlumberger. "Coiled Tubing Drilling: Update '94." Coiled Tubing Technology: Operations, Services, Practices, March 29-31, 1994.

Doremis, Denis, Schlumberger Dowell. "Drilling Directional Wells with Coiled Tubing." Coiled Tubing Technology: Operations, Service, Practices, March 13-16, 1995.

Dorman, Thomas G., Chevron USA, Terry Matte, Western Sand Control, and Gregg Stout, Western Research and Engineering. "Single-Trip Gravel Pack System Used Effectively on a Highly Deviated Well." Coiled Tubing Technology: Operations, Services, Practices, March 29-31, 1994.

Evertsen, Steffen, Smith Red Baron and Knut Pedersen, Saga Petroleum. "Window Milling and Isolation Test of Stacked Multilateral Wellbores Through Concentric 5 ½" x 9 5/8" Casing." Coiled Tubing and Well Intervention Technology, Feb 9-11, 1998.

Falk, Kelly, Nowsco Well Services. "Sand Cleanout Technology Using Concentric Coiled Tubing." Coiled Tubing Technology: Operations, Service, Practices, March 13-16, 1995.

Fowler, Hampton and Perry Courville, Halliburton Energy Services. "A Coiled tubing Recompletion Technology Overview Including Repair Patches, Concentric Installations, and Circulating Gravel Packs." Coiled Tubing Technology: Operations, Service, Practices, March 13-16, 1995.

Fowler, Hampton, Halliburton Energy Services. "Coiled Tubing Completion Opportunities: Equipment and Considerations for Running Larger Diameters." Coiled Tubing Technology: Operations, Services, Practices, March 29-31, 1994.

Fowler, S.H., FibersparSpoolable Products Inc, and M. Feechan and S.A. Berning, Halliburton Energy Services. "Applications Update—Advanced Composite Coiled Tubing." SPE 460543, Coiled Tubing Roundtable, April 15-16, 1998.

Gantt, Lamar L., and Bruce E. Smith, ARCO Alaska. "Advancements in the Coiled Tubing Cement Squeeze Process at Prudhoe Bay." Coiled Tubing Technology: Operations, Services, Practices, March 29-31, 1994.

Gantt, Lamar, Arco Alaska. "North Slope Coiled Tubing Drilling Experience, Including Workover Rig Assist and MWD." Coiled Tubing Technology: Operations, Service, Practices, March 13-16, 1995.

Gary, Susan, Schlumberger Dowell. "Methodology for Designing Coiled Tubing Wellbore Cleanouts." Coiled Tubing Technology: Operations, Service, Practices, March 13-16, 1995.

Gordon, Doug, Shell Western E&P Inc. (SWEPI), and Willem van Adrichem, Shlumberger Dowell. "High-Pressure Coiled Tubing Unit for South Texas." Coiled Tubing Technology: Operations, Service, Practices, March 13-16, 1995.

Graham, R.A., Schlumberger Dowell. "Planning for Underbalanced Drilling with Coiled Tubing? The Feasability Study and Computer Modeling." SPE 46042, Coiled Tubing Roundtable, April 15-16, 1998.

Gudmonstad, Marianne, Statoil, and Hovden, Magne, Odfjell Well Intervention. "Snubbing on the Gullfaks Field: Long Tubing Patch Installed in Horizontal Gravel Pack." Coiled Tubing and Well Intervention Technology, Feb 9-11, 1998.
Hall, Jack and Ben M. Wijngaard. " Slickline Power Unit on Coiled Tubing Provides Innovative Solution for Setting a Nippleless Lock in a Multilateral Completion" SPE 47847.

Hall, Jack, Halliburton World Wide Ltd. "Slickline Power Unit on CT Provides Solution for Setting Nippleless Locks in Multilateral Completions." Coiled Tubing and Well Intervention Technology, Feb 9-11, 1998.

Hardy, Jack, Imperial Snubbing Services. "Innovation and Design Changes Allow Snubbing Unit to Drill Faster and Cheaper." Coiled Tubing and Well Intervention Technology, Feb 9-11, 1998.

Hartley, Michael, Larry Harford, Transocean Petroleum Technology, Giorgio Girola and Carlo Bascjenis, Agip Teap. "Coiled Tubing Drilling Ragusa Field: Continuous Improvements on A 3-well CTD Campaign." Coiled Tubing and Well Intervention Technology, Feb 9-11, 1998.

Haver, Nelson, Drexel Coiled Tubing Products, Inc. "System Injects Cable onto Coiled Tubing." Coiled Tubing Technology: Operations, Service, Practices, March 13-16, 1995.
Head, P.F., XL Technology Ltd., T.J. Hanson, Enterprise Oil Plc., M. Yuratich, TSL Technology Ltd., and

D.R. Turner XL Technology Ltd. "Electric Coiled Tubing Drilling—The First Steps Toward a Smart CT Drilling System." SPE 46013, Coiled Tubing Roundtable, April 15-16, 1998.

Head, Philip, XL Technology Ltd. "ESP Deployment on Coiled Tubing with Internal Power Cable." Coiled Tubing Technology: Operations, Service, Practices, March 13-16, 1995.

Hern, Dave, Arco Alaska. "Coiled Tubing Window Milling Techniques." Coiled Tubing Technology: Operations, Service, Practices, March 13-16, 1995.
Herring, Barry, Quality Tubing. "On and Offshore Flowline/Pipeline Coiled Tubing Installations." Coiled Tubing Technology: Operations, Service, Practices, March 13-16, 1995.

Hightower, C.M. (Mel), ARCO E&P Technology. "An Operator's Coiled Tubing Drilling History." Coiled Tubing and Well Intervention Technology Conference and Exhibition, Feb 4-6, 1997.

Hightower, C.M. (Mel), ARCO E&P Technology. "An Operator's CT Drilling History." Coiled Tubing and Well Intervention Technology, Feb 9-11, 1998.

Hoyer, Carel, Nowsco Well Services. "Coiled Tubing Straddle Packer Stimulations." Coiled Tubing Technology: Operations, Service, Practices, March 13-16, 1995.

International Coiled Tubing Association, 1997. "Coiled Tubing Welding Specifications for Tube-to-Tube Welds."

Johnson, Ashley, Schlumberger Cambridge Research, and David Eslinger and Henrik Larson, Schlumberger Dowell. "An Abrasive Jetting Scale Removal System." SPE 46026, Coiled Tubing Roundtable, April 15-16, 1998.

Johnston, Colin, Baker Hughes INTEQ. "Evolution and Development of Fit-for-Purpose CTD Rigs." Coiled Tubing and Well Intervention Technology, Feb 9-11, 1998.

Larimore, David R., Gary Z. Fehrmann and Russell I. Bayh, III, Halliburton Energy Services. "Case Histories: Advancements in Slickline Technology Provide Cost Efficient Well Intervention." Coiled Tubing and Well Intervention Technology Conference and Exhibition, Feb 4-6, 1997.

Latos, Gordon, Nowsco Well Service. "Performance and Economy in Downhole Jetting." Coiled Tubing Technology: Operations, Services, Practices, March 29-31, 1994.

Leising, L.J., and I.C. Walton, Schlumberger Dowell. "Cuttings Transport Problems and Solutions in Coiled Tubing Drilling." SPE 39300, Coiled Tubing Roundtable, April 15-16, 1998.

Lemp, Stephen P., Cliff Webe, and Bart Thomeed, Dowell. "Downhole Sensors for Coiled Tubing Stimulations." Coiled Tubing Technology: Operations, Services, Practices, March 29-31, 1994.

Leslie, Charles, BP Exploration (Aberdeen). "Coiled Tubing Drilling Operations in BP's West Sole Field." Coiled Tubing Technology: Operations, Service, Practices, March 13-16, 1995.

Leslie, Charlie, BP Exploration and Malcolm Piutman, Baker Oil Tools. "Fishing Coiled Tubing." Coiled Tubing Technology: Operations, Service, Practices, March 13-16, 1995.

Liaaen, Nils, Rogaland Research. "Update on Coiled Tubing Research Activities and Projects." Coiled Tubing Technology: Operations, Service, Practices, March 13-16, 1995.

Lord, D.J. and J.G. Brinkhorst, Shell UK E&P, T.J. Robertson, Schlumberger Dowell, and R.H. Martin, Schlumberger Anadrill. "Coiled Tubing Drilling on the North Cormorant Platform." SPE 46046, Coiled Tubing Roundtable, April 15-16, 1998.

Lord, David, Jan Brinkhorst, Bill Townsley and Philip Bogaert, NFU, Shell Expro. "Shell Expro's First Application of Coiled Tubing Drilling." Coiled Tubing and Well Intervention Technology Conference and Exhibition, Feb 4-6, 1997.

Martinez, Alec, and John Martinex, Production Assocs. "Coiled Tubing Velocity Strings—Expanding the Cases." SPE 46030, Coiled Tubing Roundtable, April 15-16, 1998.

Matland, Ester, Knute Arne Jacobsen, Johan Kolsto, Statoil, and Steve Howarth, Maritime Well Service/Halliburton Coiled Tubing Alliance. "Planning and Execution of Tubing Milling with Coiled Tubing." Coiled Tubing Technology: Operations, Service, Practices, March 13-16, 1995.

McCoy, Terry, Halliburton Energy Services, and mark Negley, Ames Magnetics, Inc. "Estimation of QT-800 Fatigue Lifetime throught the Use of Magnetics." SPE 46014, Coiled Tubing Roundtable, April 15-16, 1998.

McMechan, Roger, PetroCanada Resources, and Dave Crombie, Nowsco Well Services. "Drilling, Completing and Fracturing a Gas Well with Coiled Tubing." Coiled Tubing Technology: Operations, Services, Practices, March 29-31, 1994.

Melvan, J., BP Exploration (Consultant). "Coiled Tubing Fill Clean-Outs." Coiled Tubing Technology: Operations, Services, Practices, March 29-31, 1994.

Misselbrook, John, Nowsco Well Services. "Coiled Tubing Drilling for Underbalanced 'Well Finishing'." Coiled Tubing Technology: Operations, Service, Practices, March 13-16, 1995.

Moak, Tony W., Terry Prater, Ensearch Exploration Inc., Randall Lagendyk, and Brent E. Olsen, HWC Inc. "Through-Tubing Snubbing Workover on a Subsea Well Under Pressure." Coiled Tubing and Well Intervention Technology, Feb 9-11, 1998.

Moore, Brian, Nowcam. "The Mechanics of Coupling Completion Equipment to Coiled Tubing." Coiled Tubing Technology: Operations, Services, Practices, March 29-31, 1994.

Myklebust, Jens, Kjell I. Torgerson, JM Consult, and Knut Pedersen, Saga Petroleum. "The First Remote-Operated Pipe Handling System for CTD Liner Installation." Coiled Tubing and Well Intervention Technology, Feb 9-11, 1998.

Newman, Ken, Drexel Coiled Tubing Products Inc. "Hybrid Coiled Tubing/Snubbing Unit Drilling and Completions." Coiled Tubing Technology: Operations, Service, Practices, March 13-16, 1995.

Newman, Ken, Drexel, Phil Drake, Hydra Rig, and Rick Palmer, Texas Oil Tools. "New Developments in Coiled Tubing Equipment." Coiled Tubing Technology: Operations, Services, Practices, March 29-31, 1994.

Nirider, Lee, Marathon Oil Co. "Coiled Tubing Completions: A Marathon Oil Co. Overview." Coiled Tubing Technology: Operations, Service, Practices, March 13-16, 1995.

Ostvang, Knut, John Haukvik, Statoil A/S, Terje Skeie, MWS, and Jorgen Hallundboek, Welltec. "World's First Successful Horizontal Wireline Operation." Coiled Tubing and Well Intervention Technology Conference and Exhibition, Feb 4-6, 1997.

Ostvang, Knut, Oddbjorn Kopperstad, and Roger J. Tailby, Statoil. "Planning, Implementation and Analysis of Coiled Tubing Operations in Ultra-Long-Reach Wells." Coiled Tubing Technology: Operations, Services, Practices, March 29-31, 1994.

Papadimitriou, Steve, Stwylan Inc., and R.K. Stanley, NDE Information Consultants. "Inspection of Used Coiled Tubing." Coiled Tubing Technology: Operations, Services, Practices, March 29-31, 1994.

Pearson, Jim, Dowell Schlumberger, and Paul Starck, Maersk Oil & Gas. "First Boat-Based CT Operations in the North Sea." Coiled Tubing and Well Intervention Technology, Feb 9-11, 1998.

Pedersen, Knut, Svein Orstland, Ivar Spilling, Rolf Bratlie, Saga Petroleum ASA, Tony Hargreaves, Dowell, Paul Lonsdale, Anadrill, Jim Crawford, The Red Baron, and Brit Braddick, Texas Iron Works. "Multilateral Branch Drilling Through Tubing Using CT, Plans for Snorre Field TLP in Norway, North Sea." Coiled Tubing and Well Intervention Technology Conference and Exhibition, Feb 4-6, 1997.

Pelling, Bob, Lasmo, and Peter Scott, Transocean. "TCP Perforating on Coiled Tubing Using Gun." Coiled Tubing Technology: Operations, Service, Practices, March 13-16, 1995.

Penny, Rusty, Arco. "Update on Electric Submersible Pump Completion Run on Coiled Tubing." Coiled Tubing and Well Intervention Technology Conference and Exhibition, Feb 4-6, 1997.

Plummer, Mark J., Mark A. Peavy, Oryx Energy Co., and Jay Cooke, Santa Fe Minerals Inc. "Through-Tubing Gravel Packs: Gulf of Mexico Case Histories." Coiled Tubing Technology: Operations, Services, Practices, March 29-31, 1994.

Pourjavad, Mohsen, EEM Engineering, Rolf Bratli and Knut Pedersen, Saga Petroleum. "Finite Element Modeling as a New Design Tool for CTD Branch Design Applied for Snorre Field, North Sea." Coiled Tubing and Well Intervention Technology, Feb 9-11, 1998.

Procyk, Alex, Pall Well Technology, and George King, Amoco Exploration and Production Technology Group. "Sand Analysis for Screens in Non-Gravel Packed Applications." Coiled Tubing and Well Intervention Technology Conference and Exhibition, Feb 4-6, 1997.

Qiu, Weiyong, Baker Oil Tools, Stefan Miska, University of Tulsa, and Leonard Volk, BDM Petroleum Technologies. "Effect of Coiled Tubing Initial Configuration on Buckling Behavior in a Hole of Constant Curvature." SPE 46009, Coiled Tubing Roundtable, April 15-16, 1998.

Qiu, Weiyong. "Prediction of Contact Force for Drill Pipe/Coiled Tubing." SPE 51092

Quigley, M.S., and L.R. Stone, CTES L.C. "The Benefits of Real-Time Coiled Tubing Diameter Measurements." SPE 46040, Coiled Tubing Roundtable, April 15-16, 1998.

Ravensbergen, John and Andrew Campbell, BJ Services. "A Perforating Deployment System ford Coiled Tubing." Coiled Tubing and Well Intervention Technology Conference and Exhibition, Feb 4-6, 1997.

Robberechts, Hilde, Conoco Specialty Products Inc., and Curtis Blount, ARCO Alaska, Inc. "A New Generation of Drag Reducer Additives for Hydrocarbon Based CT Applications." Coiled Tubing and Well Intervention Technology Conference and Exhibition, Feb 4-6, 1997.

Romagno, Roy A., CalResources Inc., and Dave Ewert, Halliburton Energy Services. "Onshore California Coiled Tubing Drilling." Coiled Tubing Technology: Operations, Service, Practices, March 13-16, 1995.

Rosen, P.M.A., Rosen Inspection Technologies. "Remote Coiled Tubing Operation Monitoring." SPE 46038, Coiled Tubing Roundtable, April 15-16, 1998.

Rosen, Patrik, Rosen Inspection Technologies. "Progress in Onshore and Offshore Coiled Tubing Inspection and Monitoring."

Coiled Tubing and Well Intervention Technology Conference and Exhibition, Feb 4-6, 1997.

Samsonsen, B., B.G. Jacobsen, T. Skagestad, and S. Kerr. "Drilling and Completing a High-Angle Well With Coiled Tubing Technology." SPE 48941.

Sas-Jaworsky, Alex II, SAS Industries, Inc., and Troy Reed, Reed Analytics & Consultants. "Fluid Hydraulics Behavior in CT Operations—A Nodal Analysis Approach." Coiled Tubing and Well Intervention Technology Conference and Exhibition, Feb 4-6, 1997.

Sas-Jaworsky, Alex II, SAS Industries. "Update of API Coiled Tubing Standards Activities." Coiled Tubing and Well Intervention Technology Conference and Exhibition, Feb 4-6, 1997.

Sas-Jaworsky, Alexander II, SAS Industries Inc. "API Committee 5 Overview of Recommended Coiled Tubing Practices." Coiled Tubing Technology: Operations, Service, Practices, March 13-16, 1995.

Sas-Jaworsky, Alexander, and Jerry G. Williams, Conoco. "Potential Applications and Enabling Capabilities of Composite Coiled Tubing." Coiled Tubing Technology: Operations, Services, Practices, March 29-31, 1994.

Sas-Jaworsky, Alexander, Clarence G. Steube, and Phillip A. Coleman, Conoco, Inc. "Convergence Initiative for Coiled Tubing—An Operator's Perspective." Coiled Tubing Technology: Operations, Services, Practices, March 29-31, 1994.

Schamp, J.H., Mobil International Drilling Services, and P.V.R Suryanarayana, Mobil E&P Technical Center. "Job Tracking Using Local Friction Profile to Minimize Risk in CT Operations." SPE 46032, Coiled Tubing Roundtable, April 15-16, 1998.

Sehnal, Zdnek, Bjorn Ostebo and Kjell Rorhuus, Dolphin/HWC. "Extending The Limits of Hydraulic Workover Technology." Coiled Tubing and Well Intervention Technology Conference and Exhibition, Feb 4-6, 1997.

Selby, B.A., Halliburton Energy Services, N. Strinivasan, B. Donnely, IRI Intl. Corp, R.A. Vincent, and J. Wilke, Halliburtone Energy Services. "Hybrid Coiled Tubing System for Offshore Re-Entry Drilling and Workover." SPE 39374, Coiled Tubing Roundtable, April 15-16, 1998.

Selby, Bruce, Halliburton Energy Services. "Horizontal Sidetrack of Existing North Sea Well." Coiled Tubing Technology: Operations, Service, Practices, March 13-16, 1995.

Sjonberg, Gier, Transocean ASA. "Coiled Tubing Drilling: Successful Drilling Offshore in the North Sea." Coiled Tubing and Well Intervention Technology Conference and Exhibition, Feb 4-6, 1997.

Smith, Bruce, ARCO. "Operational Issues and Experience of Combining CT Unit with a Rotary Drilling Rig." Coiled Tubing and Well Intervention Technology Conference and Exhibition, Feb 4-6, 1997.

Smith, Ian, Transocean Well services Ltd., and Russsel Jordan, Pentex Oil. "Onshore UK Coiled Tubing Drilling." Coiled Tubing Technology: Operations, Service, Practices, March 13-16, 1995.

Smith, Ted, Halliburton Energy Services. "Snubbing Unit Enables Foam—Wash Sand Removal." Coiled Tubing and Well Intervention Technology Conference and Exhibition, Feb 4-6, 1997.

Sola, Sonny, Transocean Petroleum Technology. "Coiled Tubing Rig Features Unique Configuration." Coiled Tubing and Well Intervention Technology Conference and Exhibition, Feb 4-6, 1997.

Sola, Sonny, Transocean Petroleum Technology. "The New Generation Coiled Tubing Drilling Rigs (CDR0: The Future's Ultimate Drilling Machine." Coiled Tubing and Well Intervention Technology, Feb 9-11, 1998.

Sorrell, Dean and Ron Miller, Shell Western E&P, Inc. "Coiled Tubing CO_2 Gas Lift Evaluated in West Texas." Coiled Tubing and Well Intervention Technology Conference and Exhibition, Feb 4-6, 1997.

SPE Reprint Series No. 38. Coiled Tubing Technology. Society of Petroleum Engineers, Richardson, Texas, 1994.

SPE/ICoTA. Proceedings: Coiled Tubing Roundtable. 15-16 April 1998.

Stanley, R.K., Quality Tubing Inc. "Results from NDE Inspections of Coiled Tubing." SPE 46023, Coiled Tubing Roundtable, April 15-16, 1998.

Stanley, Roderic K., Quality Tubing Inc. "Failures in Coiled Steel Tubing." Coiled Tubing and Well Intervention Technology Conference and Exhibition, Feb 4-6, 1997.

Stanley, Roderic K., Quality Tubing Inc. "Result from NDE Inspections of Coiled Tubing." Coiled Tubing and Well Intervention Technology, Feb 9-11, 1998.

Stephens, Rodney K. and James L. Welch, BP Exploration (Prudhoe Bay). "Coiled Tubing Remedial Straddle Completions." Coiled Tubing Technology: Operations, Services, Practices, March 29-31, 1994.

Stewart, Hamish, Camco International Inc., and Graham Medhurst, Coflexip Stena Offshore. "A Decade of Subsea Well Intervention." Coiled Tubing and Well Intervention Technology, Feb 9-11, 1998.

Stricklin, David, and Mike Smith, Cudd Pressure Control, Inc. "Concentric Workovers in a Well Recovery Operation." Coiled Tubing and Well Intervention Technology Conference and Exhibition, Feb 4-6, 1997.

Teel, Mark E., editor. World Oil Coiled Tubing Handbook. Gulf Publishing, Houston, Texas, 1993.

Thomeer, Bart, Dowell, and Sammy Gauthier, Conoco Coiled Tubing Services. "Review of Coiled Tubing Completion Trends." Coiled Tubing Technology: Operations, Service, Practices, March 13-16, 1995.

Thompson, J.M., P.C. Lewis, Sid Scott, CYMAX, and S.H. Fowler, Halliburton Energy Services. "Full Body Quenched and Tempered Coiled Tubing: Theory vs. Field Experience." Coiled Tubing Technology: Operations, Services, Practices, March 29-31, 1994.

Tippon, Steven M., University of Tulsa, and Paul A. Brown, Dowell Schlumberger. "Monitoring Coiled Tubing Fatigue Life." Coiled Tubing Technology: Operations, Services, Practices, March 29-31, 1994.

Tipton, Steven M., and James R. Soren Jr. Mechanical Engineering Department, The University of Tulsa, and Radovan D. Rolovic, Schlumberger Dowell. "The Influence of Tubing Rotation on its Mechanical Behavior." Coiled Tubing and Well Intervention Technology, Feb 9-11, 1998.

Toler, Scott, Stewart & Stevenson. "High Capacity Injector Head for Large OD CT and Jointed Tubing." Coiled Tubing and Well Intervention Technology Conference and Exhibition, Feb 4-6, 1997.

Townsend, Steve, George King and Ernie Onyia, Amoco EPTG Drilling. "Evaluation of a Through-Tubing Whipstock System to Exit Both 7-in. and 9 5/8-in. Casing Strings Using Coiled Tubing." Coiled Tubing and Well Intervention Technology Conference and Exhibition, Feb 4-6, 1997.

Wesson, W.R. (Rob), Cudd Pressure Control. "Coiled Tubing Pipelines and Flowlines: Update '94." Coiled Tubing Technology: Operations, Services, Practices, March 29-31, 1994.

Williams, Brock, BP. "Update on use of CT/Self Propelled Hybrid Workover Rig in Arctic Service." Coiled Tubing and Well Intervention Technology Conference and Exhibition, Feb 4-6, 1997.

Yang, Y.S., Maurer Engineering Inc., V.A. Avkov, Halliburton Energy Services, D.E. Smith, Well Service Technology A/S., J.R. Martin, Qualtiy Tubing Inc., and J. Wu, Chevron Petroleum Technology. "Coiled Tubing Fatigue Damage on Floating Vessels." SPE 46252, Coiled Tubing Roundtable, April 15-16, 1998.

Zheng, A.S., Schlumberger Dowell. "An Improved Model for Collapse Pressure of Oval Coiled Tubing." SPE 46003, Coiled Tubing Roundtable, April 15-16, 1998.