FOSSIL ENERGY

DOE/BC/10215-27

NUMERICAL MODEL OF MASSIVE HYDRAULIC FRACTURE

Second Annual Report, September 1981-August 1982

Work Performed for the Department of Energy
Under Contract No. DE-AS19-80BC10215

Date Published—July 1983

Oral Roberts University
Tulsa, Oklahoma

U. S. DEPARTMENT OF ENERGY

DISCLAIMER

This report was prepared as an account of work sponsored by an agency of the United States Government. Neither the United States Government nor any agency thereof, nor any of their employees, makes any warranty, express or implied, or assumes any legal liability or responsibility for the accuracy, completeness, or usefulness of any information, apparatus, product, or process disclosed, or represents that its use would not infringe privately owned rights. Reference herein to any specific commercial product, process, or service by trade name, trademark, manufacturer, or otherwise, does not necessarily constitute or imply its endorsement, recommendation, or favoring by the United States Government or any agency thereof. The views and opinions of authors expressed herein do not necessarily state or reflect those of the United States Government or any agency thereof.

Printed in the United States of America. Available from:
National Technical Information Service
U.S. Department of Commerce
5285 Port Royal Road
Springfield, VA 22161

NTIS price codes
Paper copy: $11.50
Microfiche copy: $4.50

DOE/BC/10215-27
Distribution Category UC-92a

NUMERICAL MODEL OF MASSIVE HYDRAULIC FRACTURE

Second Annual Report, September 1981–August 1982

I. D. Palmer, *Principal Investigator*
Oral Roberts University
7777 South Lewis
Tulsa, Oklahoma 74171

H. B. Carroll, Jr, *Technical Project Officer*
Bartlesville Energy Technology Center
P.O. Box 1398
Bartlesville, Oklahoma 74005

Work Performed for the Department of Energy
Under Contract No. DE-AS19-80BC10215

Date Published—July 1983

UNITED STATES DEPARTMENT OF ENERGY

TABLE OF CONTENTS

		Page
	Abstract	1
I	Introduction	3
II	Modeling in Blanket Sand - Elliptical Fracture and No Leakoff	4
	Model FL1	4
	New Results	5
	Model FL2	7
	New Results	7
III	Modeling in Blanket Sand - Leakoff Included and Fracture Shape Not Assumed	11
	The Equations	11
	Method of Solution	16
	Illustrative Result	18
	Extension to Asymmetric Stresses and Vertical Gradients of Fluid Pressure and Stress	26
	Prediction of Fracture Height in Cozzette Sand	26
	Limitations of the Modeling	30
IV	Preliminary Modeling in Lenticular Gas Sands	33
V	Conclusion	39
	Acknowledgement	41
	Nomenclature	42
	References	43
	Appendix A	45
	Appendix B	47
	Appendix C	50
	Appendix D	51

LIST OF FIGURES

Figure		Page
1	Wellbore half-height, b, and bottomhole pressure, p_f-S_1, dependence on S_2-S_1 and E (model FL1). Results on the left side are based on fluid flow equation (1) in text; those on the right on equation (1) modified	6
2	Height and bottomhole pressure dependence on S_2-S_1 (model FL2)	8
3	Effect of changing H on results	10
4	Effect of different E on results	12
5	Effect of changing K_c on results	13
6	Sketch showing basic parameters in model in which fracture shape is determined	14
7a	Fracture height as a function of distance along payzone in illustrative results	19
7b	Flow rate as function of distance along payzone	20
7c	Net pressure profile in the fracture	20
8a	Bottomhole pressure increase with time	22
8b	Fracture height growth with time	23
8c	Fracture length expansion with time	24
9	Fracture height versus length	25
10	Prediction of fracture height in stimulation of upper Cozzette	27
11	Prediction of fracture penetration into high-stress stringer as a function of pumping parameters	31
12	Simple geometries in lenticular sand	34
13	Fracture shape for Figure 12(b)	36
14	Preliminary results from lenticular sand modeling	38
15	Vertical section of fracture when bounding stresses are asymmetric and corresponding variation of net pressure	48

LIST OF TABLES

Table		
1	Parameters used in modeling the Cozzette sand stimulation	29

ABSTRACT

Theoretical modeling of the expansion of hydraulic fractures has proceeded on three fronts: (i) blanket sand, no leakoff, fracture shape assumed, (ii) blanket sand, includes leakoff, fracture shape derived, (iii) lenticular sand.

As a continuation of the last annual report, (i) assumes the fracture perimeter is an ellipse, then solves the governing equations (without leakoff) to obtain fracture height at the wellbore in two models, FL1 and FL2, for the case of a payzone bounded by two zones of higher (but equal) minimum in-situ stress. The two models describe the variation of minimum in-situ stress in the vertical direction differently. Subsequent modeling in (ii) indicates that the results here are a good approximation for the case in which the fracture shape and fluid flow profile are derived, rather than assumed. In a parameter study, the wellbore height and pressure are investigated as to the way they depend upon stress contrast between pay and bounding zones, elastic modulus of the formation (assumed the same in each zone), height of the payzone, and finally, fracture toughness in the bounding zones. Changes in fracture toughness have less effect on fracture height and bottomhole pressure than changes in the other parameters. When fracturing a payzone of less height, the results show that wellbore height and pressure will be greater, and therefore higher bounding zone stresses would be required to confine the fracture. Similarly, when fracturing a formation with higher elastic modulus, the results reveal that wellbore height and pressure will be greater. Finally, there may be situations when rapid height growth sets in, and the results herein may be useful to avoid such "divergent" height behaviour.

To improve the accuracy of the modeling, in (ii) leakoff is included and the assumption of elliptical fracture shape is discarded. A complete, illustrative solution is given for fracture height, shape, and bottomhole pressure.

The fracture height decreases more-or-less exponentially with distance along the payzone. The flow rate along the fracture is not far from linear, but has a finite value at the tip of the long axis. Time profiles of height, length and bottomhole pressure are given. The length/height ratio increases with time, from 5 at a = 4000 ft to 24 at a = 3000 ft. Results for $C = 0$ are a good approximation to those when $C \lesssim .001$ ft $\text{min}^{-1/2}$, except those that involve time.

To illustrate bounding zone stresses which are not symmetric about the payzone, fracture height growth has been estimated in the Cozzette sand (as a function of pumping parameters), which was to be stimulated in the Multi-Well Experiment.

The main limitation of the models in (i) and (ii) is that rate of height growth must be considerably less than rate of length expansion.

Finally, in (iii) some preliminary modeling of fracture expansion in lenticular gas sands is presented.

I. INTRODUCTION

Vertical hydraulic fractures, used to enhance the release of natural gas, sometimes reach thousands of feet in length, while extending only a few hundred feet in height. When a payzone is bounded above and below by zones which have a substantially higher minimum in-situ stress, conditions are optimal for restricting a fracture's vertical growth. By theoretically calculating the height and shape of a fracture, our goal is to study how well higher stress zones adjacent to a blanket payzone confine the vertical growth.

The modeling, at this stage of development, is subject to certain restrictions. The fluid flow is 1D, that is, flow along the direction of the payzone only. Secondly, the fracture shape, which is geometrically a 3D result, is based on a 2D elasticity and fracture mechanics approach. However, the advantage of the present model is its simplicity, and, as compared to a truly 3D approach, we suspect the predicted fracture height and bottomhole pressure will not be far from the truth.

The first publication of 3D modeling was by Simonson et al.,[1] who estimated fracture height from the pressure at the wellbore, but did not take account of actual fracture height in determining pressure. 3D modeling has also been performed by Cleary,[2] Settari and Cleary,[3] and Nolte and Smith.[4] The second paper, which is the most recent, approximates the fluid flow by 1D flow along the payzone direction plus 1D flow in the vertical direction. The model apparently has the advantage of less computational time compared with a full 3D solution.

The work of Clifton and Abou-Sayed,[5] and Sinha[6] entails such full 3D modeling (i.e., 3D elasticity and fluid flow equations). The computations are very complex and, at this stage, are just beginning to be applied to field cases.

II. MODELING IN BLANKET SANDS - ELLIPTICAL FRACTURE AND NO LEAKOFF

Model FL1

As described previously,[7] FL1 approximates the discontinuous jump in minimum in-situ stress at the top and bottom of the payzone by a y^2 variation (y is the vertical coordinate). The width equation, $w_o(p)$, and the pressure drop equation, $p(w_o)$, are then solved simultaneously subject to the condition that the stress-intensity factor at the wellbore, K_{ib}, equal the fracture toughness, K_c. The ensuing solutions for fracture half-height, b, at the wellbore and pressure profile, p(x), depend on the boundary condition, viz. the net pressure assumed at the tip of the long axis, p_a.

The purpose of the vertical y^2 variation in stress is to allow the resulting p(x) profile to be used in conjunction with the results of Shah and Kobayashi[8] for an elliptical fracture, in order to find K_{ia}, the stress-intensity factor at a. An iteration is performed until $K_{ia} = K_c$.

Fluid flow equation

The fluid flow equation has been revised from that used previously,[7] and it should be more realistic. The first approximation used is the Poiseuille equation[9] for 1D Newtonian flow along the payzone. With $p = p_f - S_1$, where p_f is fluid pressure and S_1 is the minimum in-situ stress in the payzone:

$$\frac{dp(x)}{dx} = \frac{-64}{\pi} \frac{q(x)\ \mu(x)}{w_o^{\ 3}(x)h(x)} \qquad (1)$$

where the cross-section has been assumed elliptical and with eccentricity of 1. In actual fact, the eccentricity is not exactly one, and furthermore the cross-section will be distorted from an elliptical shape because the higher stresses above and below the payzone will reduce the width in those regions. Nevertheless, (1) is expected to be a reasonable approximation. q(x) is local flow rate, which decreases with x because some fluid is "stored" as the fracture expands,

and some fluid leaks into the surrounding rock. The fluid viscosity, $\mu(x)$, will decline with x due to temperature rise and fluid degradation. Following Nolte,[10] we take $\mu(x) = \mu(0)\ (1-x/a)$ and $q(x) = q(0)\ (1-x/a)$.

The second approximation for the pressure drop equation comes from the following considerations. In some circumstances, where the bounding layer stresses are higher than in the payzone, the bulk of the viscous fluid loss may occur in the payzone (i.e., flow rate greatly restricted in the "wings" above and below the payzone). In this case the fluid flow, at least when fracture height, h, >> the payzone height, H, might be better approximated by flow in a channel of height H and uniform width w_o, which leads to a simple modification of (1). Of course when $h \simeq H$, the appropriate equation would be (1). If a linear interpolation is assumed between these two extremes, we have an alternative fluid equation, referred to as modified (1), which will produce somewhat different results as explained below.

New Results

As discussed before,[7] changes in K_c have much less effect on the results for wellbore height, b, and bottomhole pressure, p(0), than do changes in S_2-S_1 (stress contrast between pay and bounding zone), or E (Young's modulus is taken to be the same in the bounding zones as in the payzone). Hence we show here only the effect of the latter. On the left in Figure 1 are b and p(0) as they vary with fracture half length, a, when the fluid flow is given by equation (1) above. A representative set of formation and pumping parameters is shown in the box. The fracture penetrates farther into the higher stress zones when (a) S_2-S_1 is reduced from 1000 to 300 psi, (b) E is increased from 3×10^6 to 6×10^6 psi. Secondly, bottomhole pressure increases when (a) S_2-S_1 is increased from 300 to 1000 psi, and/or (b) E is increased from 3×10^6 to 6×10^6 psi.

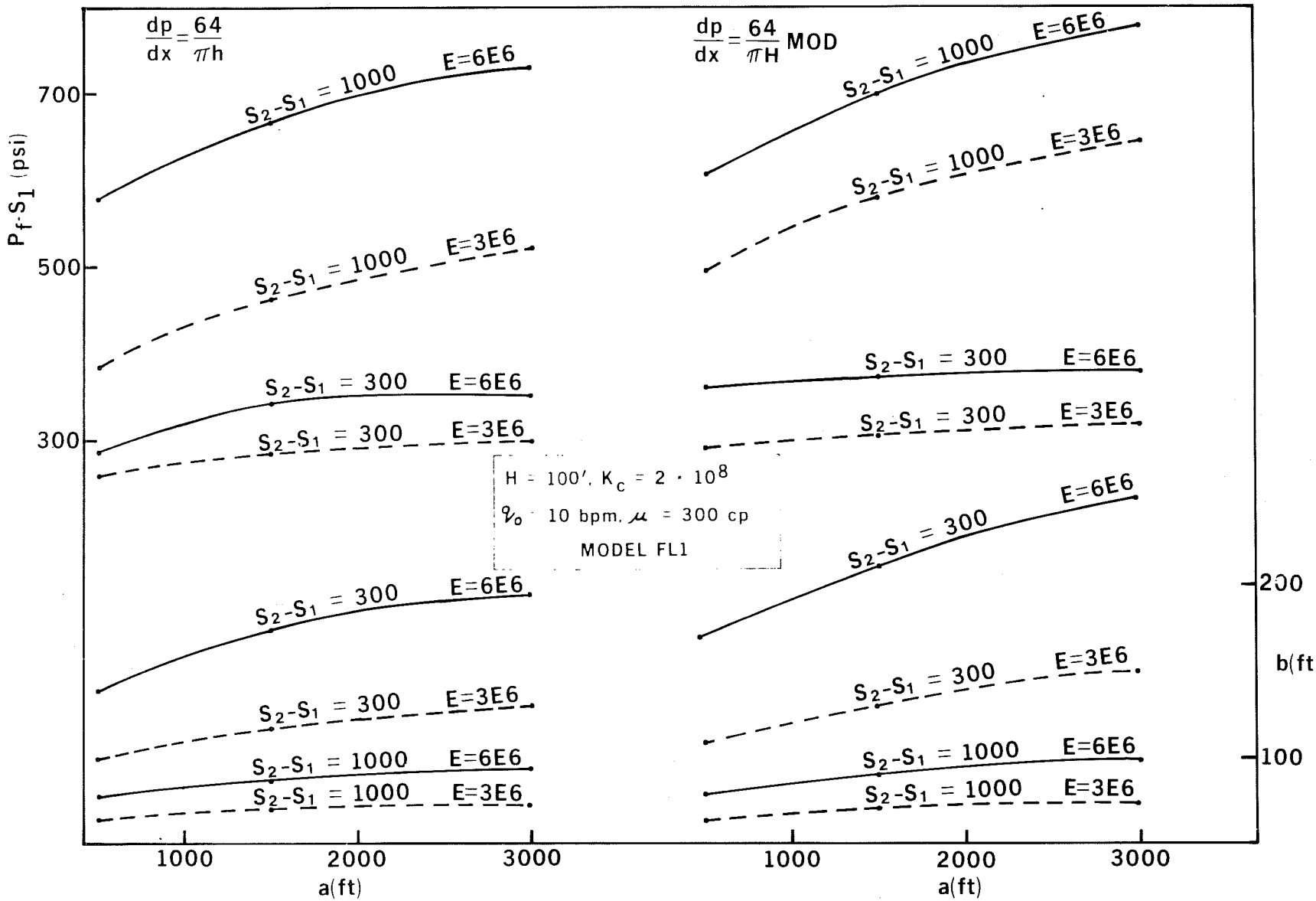

Figure 1. Wellbore half-height, b, and bottomhole pressure, p_f-S_1, dependence on S_2-S_1 and E (model FL1). Results on the left side are based on fluid flow equation (1) in text; those on the right on equation (1) modified.

Clearly, the changes are all substantial, and height growth and bottomhole pressure are strongly dependent on the formation parameters E and S_2-S_1.

The right-hand side of Figure 1 shows the corresponding results when modified equation (1) is used for the fluid flow equation. In every case b and p(0) values are elevated compared to the left side of the figure, evidently due to relatively higher p(x) values caused by a flow channel which is confined to the payzone. Until 2D fluid flows are incorporated into the modeling, one could view the left side of Figure 1 as a lower limit, and the right side as an upper limit of the predicted values.

Model FL2

The main limitation of FL1 is the rather artificial form assumed for the vertical stress variation. In FL2, as described previously[7], the stress variation is treated exactly as it is : discontinuous. Although this means the results of Shah and Kobayashi[8] cannot be utilized, it does not appear to matter much because the numerical integration used to solve $w_o(p)$ and $p(w_o)$ is practically independent of the value p_a assumed at the fracture tip (at least if $p_a \lesssim 100$ psi). If we are mainly concerned with fracture height and bottomhole pressure, the value of K_{ia} appears to be essentially inconsequential, and FL2 must be considered a better model because of the better vertical stress distribution. Once again an iteration is performed until $K_{ib} = K_c$, which leads to a fracture height at the wellbore, and bottomhole pressure.

New Results

Figure 2 shows plots of fracture height and bottomhole pressure as functions of fracture half-length when the stresses are actually discontinuous at the interface between pay and bounding zones. On the left are results for fluid flow equation (1) while those on the right correspond to equation (1)

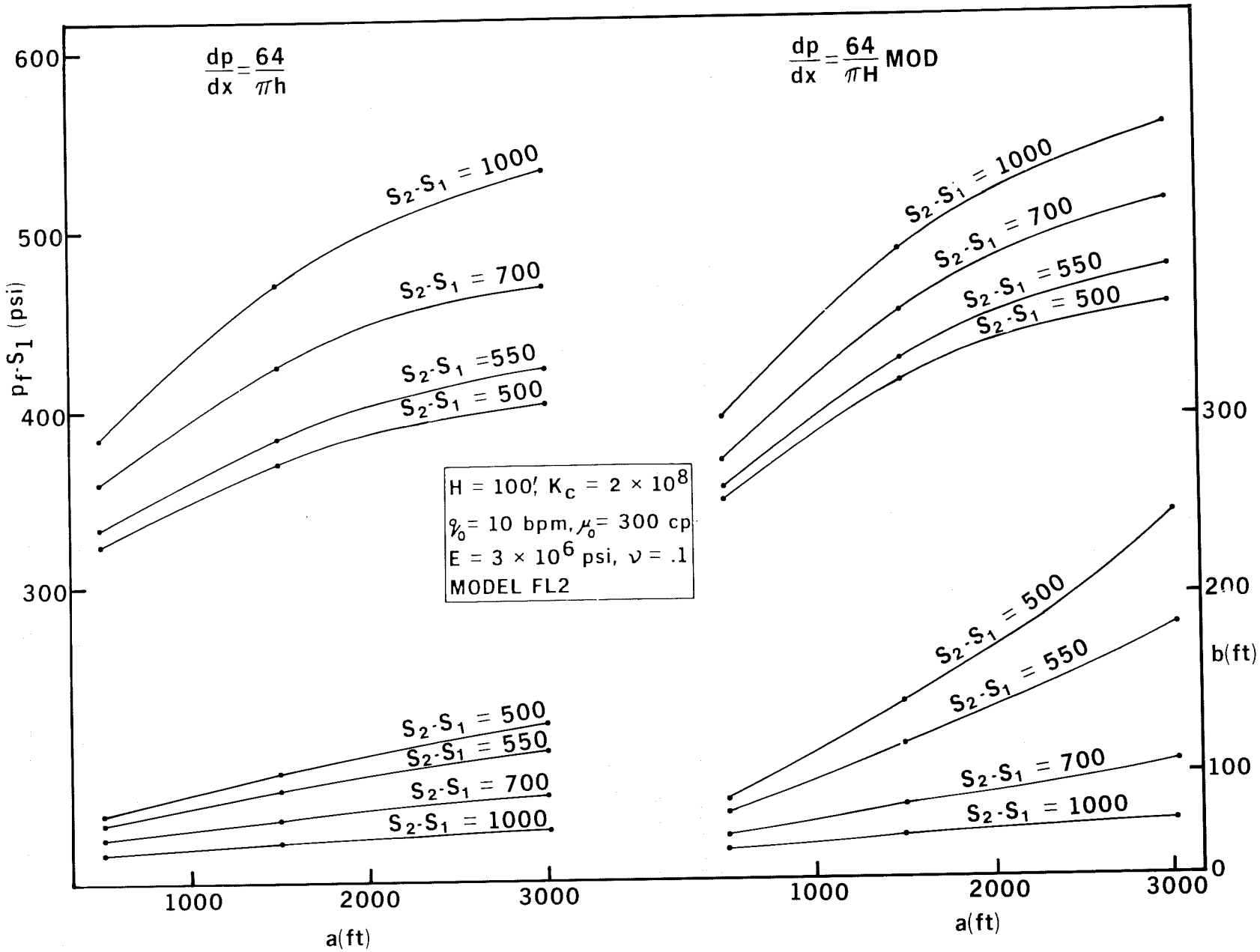

Figure 2. Height and bottomhole pressure dependence on S_2-S_1(model FL2).

modified. Again, all values on the right are elevated above those on the left.

On the left of Figure 2, the results for S_2-S_1 = 1000 psi match closely those on the left in Figure 1, which implies that when using fluid flow law (1), the fracture height and pressure, at least for high stress contrasts (S_2-S_1 ~ 1000 psi), are no different for the two separate ways of modeling the variation of stress contrast with vertical height, y. This is not true when the fluid flow is given by equation (1) modified.

As expected, Figure 2 also shows a strong dependence of fracture height and pressure on stress contrast. On the right side of Figure 2, but not on the left, as S_2-S_1 decreases towards 500 psi, a rapid growth of fracture height sets in. This "divergence" is probably due to the fact that after the fracture has expanded well into the bounding zones, the effective confining stress has reached an asymptotic limit, and a small increase in fluid pressure (due to a longer fluid flow path) gives rise to a relatively large increase in height. This behavior lies in contrast to the FL1 results in Figure 1 which do not reveal such divergence, presumably due to the y^2 variation in vertical stress, which would tend to increase the effective confining stress.

The divergent behavior does not appear in the left side of Figure 2 either, probably because the fluid flows through the entire vertical section of the fracture, and this reduces the pressure build-up away from the tip of the payzone axis. If it turns out that the right side of Figure 2 is closer to the truth, results such as this may be useful in defining "safe" limits on $\mu(0)$ and $q(0)$ in order to avoid the rapid height growth behaviour.

To see how things change when the payzone height is different, Figure 3 shows results for the same situation as in Figure 2, except that H is decreased from 100 ft to 75 ft. The bottomhole pressure is considerably

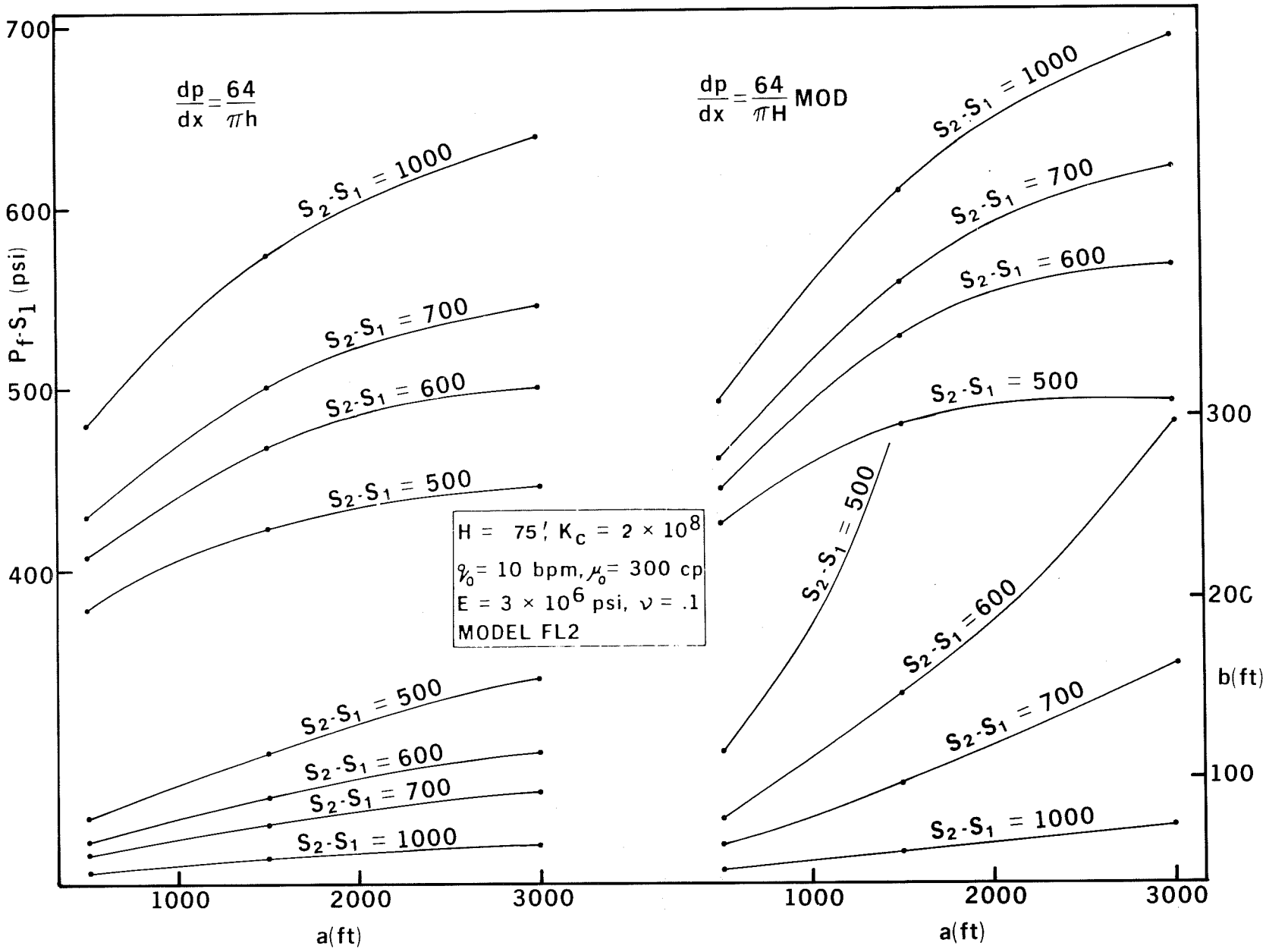

Figure 3. Effect of changing H on results.

greater, because dp/dx is greater in a smaller flow channel. A marked increase also appears in the rate of height growth on the right side of Figure 3, as compared with Figure 2. A thinner payzone gives higher fluid pressures, and implies a greater stress contrast is needed to confine the fracture.

Next, Figure 4 illustrates the effect that a different E (taken to be the same in pay and bounding zones) would have on the results. The parameters of Figure 2 are unchanged, except that E is increased to 6×10^6 psi. The effect of doubling E is even greater than the effect of height reduction from 100 to 75 ft. Fracture pressures are elevated and, on the right side, rapid height growth is in evidence at S_2-S_1 = 850 psi, compared with only 500 psi in Figure 2.

Finally, it is important to ask what effect changing K_c in the bounding layers has on fracture behavior. In Figure 5 we show results which are based on the parameters of Figure 2, except that K_c is increased from 2×10^8 to 4×10^8 d/cm$^{3/2}$. There is not a great deal of difference - the bottomhole pressures in Figures 2 and 5 are almost the same. The biggest difference is in the fracture heights at low stress contrasts. For example, the heights for S_2-S_1 = 500 psi in Figure 5 are almost identical to those for S_2-S_1 = 550 psi in Figure 2. It is clear that stress contrast, Young's modulus, and payzone height have a much greater effect on fracture propagation than does fracture toughness.

III MODELING IN BLANKET SAND - LEAKOFF INCLUDED AND FRACTURE SHAPE NOT ASSUMED

The Equations

The geometry and principal parameters are shown in Figure 6 for the case in which the fracture shape is derived from the modeling. When the fracture

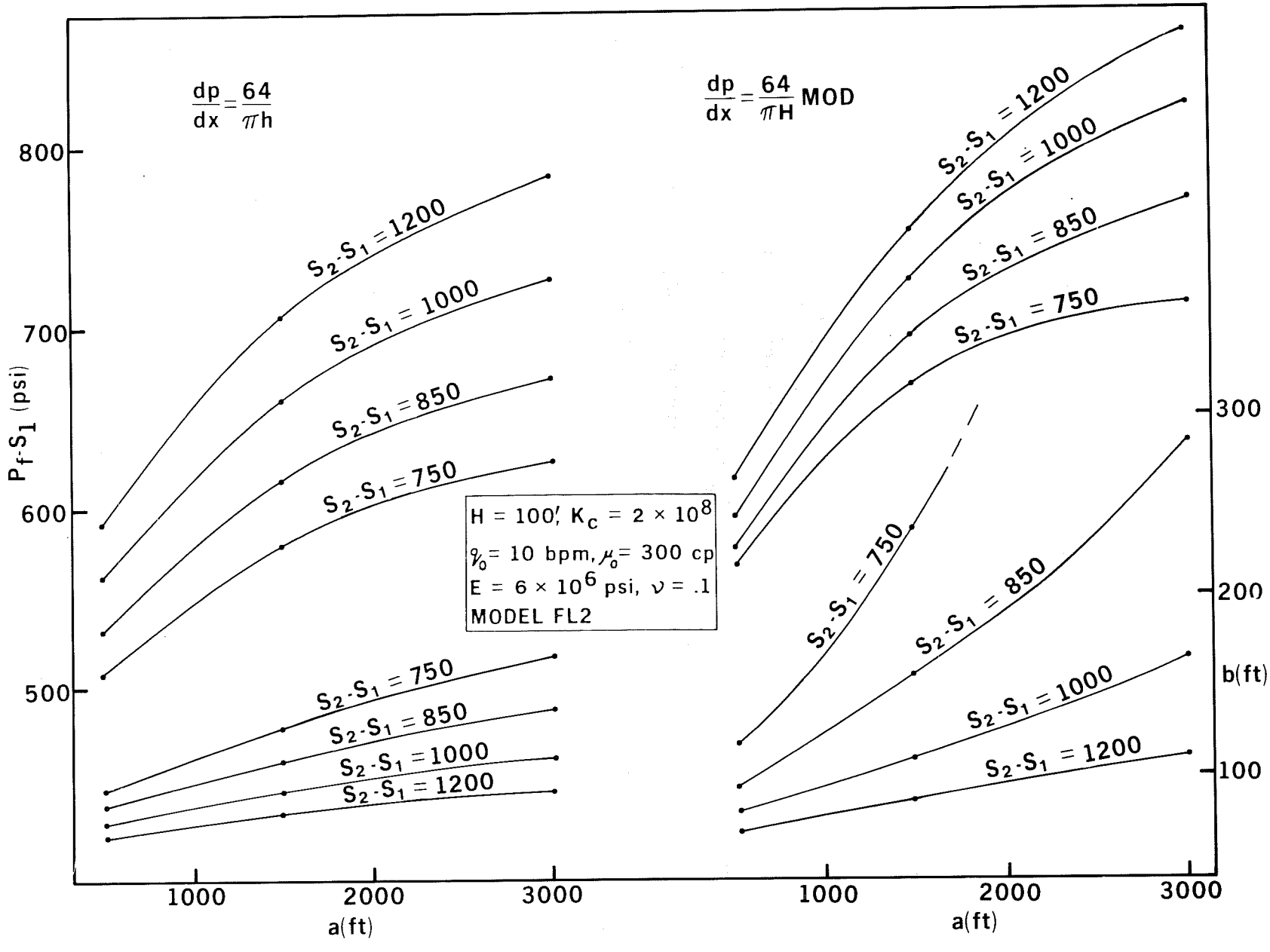

Figure 4. Effect of different E on results.

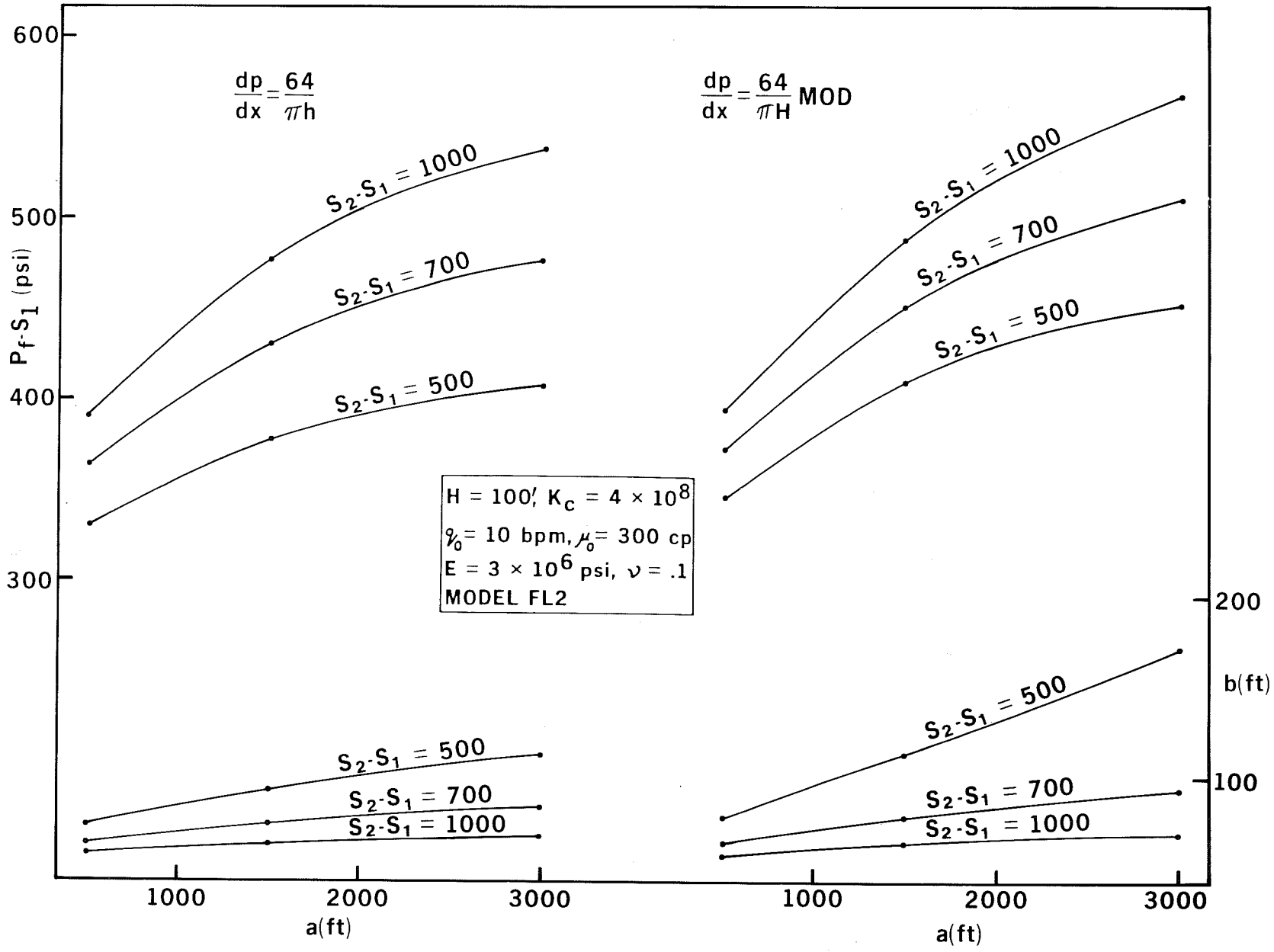

Figure 5. Effect of changing K_c on results.

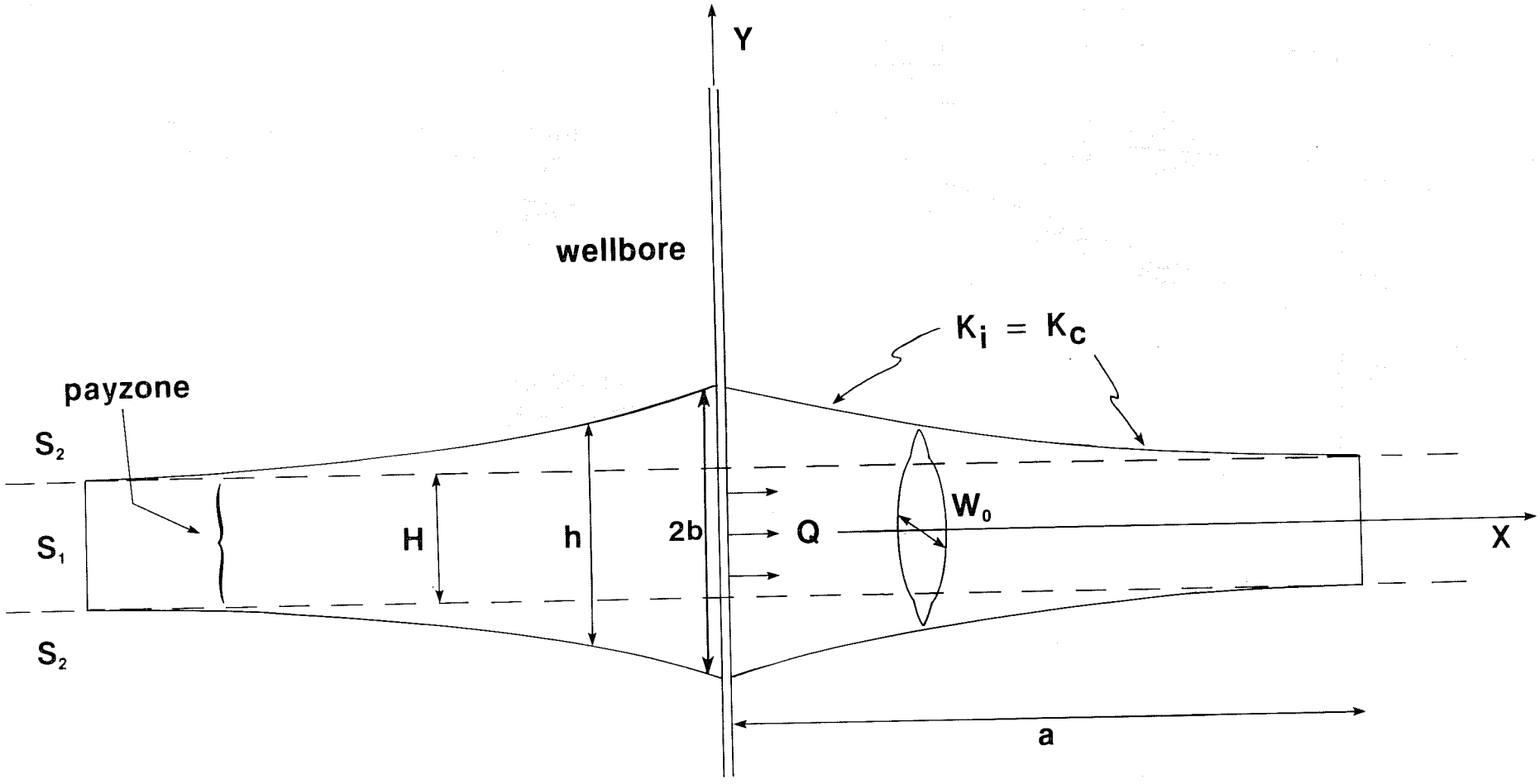

Figure 6. Sketch showing basic parameters in model in which fracture shape is determined.

shape is assumed, just replace the shape in Figure 6 by an ellipse. The equations controlling fracture expansion are:

1. The equation for fracture opening or width, w. As described in Appendix A, the fracture is represented by a series of 2D line cracks in vertical sections (a good approximation if the fracture is elongated with a length/height aspect ratio > 5). In this case w_o, the maximum width of a vertical section, is a function of net fluid pressure, p, and height, h, of the vertical section. Both p and h, of course, are functions of distance, x, along the payzone.

$$w_o(x) = f_1[p(x),\ h(x)] \tag{2}$$

2. The equation for pressure drop due to flow of viscous fluids in the fracture. If we assume 1D Newtonian flow along the payzone, the pressure drop with distance is a function of the maximum width and height of the vertical section at that point, as well as the fluid flow rate, q(x) (see Appendix A):

$$\frac{dp(x)}{dx} = f_2\ [w_o(x),\ h(x),\ q(x)] \tag{3}$$

3. The criterion for fracture expansion. From fracture mechanics, we take the criterion $K_i = K_c$, where K_i is stress intensity factor at the tip of a vertical section, and K_c is fracture toughness. For quasi-static vertical expansion, the result, as Appendix A shows, is a direct relation between p and h

$$p(x) = f_3[h(x)] \tag{4}$$

4. The equation of continuity. The change in flow rate, $q(x,t)$, with x equals the rate of fluid leakoff to surrounding rock, $\lambda(x,t)$, plus the rate of fluid "storage" as the fracture expands in volume, $dA(x,t)/dt$.

$$\frac{-dq\ (x,t)}{dx} = \lambda\ (x,t) + \frac{dA\ (x,t)}{dt} \tag{5}$$

We employ the classical rate of fluid leakoff (e.g.[11])

$$\lambda\ (x,t) = \frac{2HC}{\sqrt{t-\tau(x)}} \tag{6}$$

where C is fluid loss coefficient, and τ the time at which leakoff begins at a point x. Spurt loss is not included.

Method of Solution

For a given $q(x)$, the equations (2), (3), (4) above are three equations in three unknowns: h, p, w_o. By differentiating (4) with respect to x, the equations may be combined into a single, ordinary, first-order, first-degree differential equation in $h(x)$, as described in Appendix A. The equation can be solved by the standard fourth-order Runge-Kutta technique. The equation is integrated with respect to x, starting at the tip of the long axis of the fracture and working back to the wellbore (the two wings of the fracture are assumed symmetric). The result is a fracture shape and internal pressure profile.

The boundary condition at the tip of the long axis is simply a specified value of h. We take h to be slightly greater than the payzone height, H. The chosen value of h implies from equation (4) a particular value for pressure at

the fracture tip. However, (4) is based upon a 2D representation of $K_i = K_c$, whereas in actual fact the proximity of the fracture tip will alter p. A 3D calculation needs to be made for w and p near the fracture tip, but this is not easy. Fortunately, it does not matter, for the nature of the differential equation (in h or p) is such that whatever value of p is chosen at the tip, at least in the range 0 to 100 psi, the consequent value of p at the wellbore is essentially the same. In other words the wellbore pressure (and height) is independent of the details of pressure (and height) of the fracture at the tip of the long axis (including the near-tip region of zero fluid pressure). Thus, if our primary interest lies in fracture shape and pressure away from the tip of the long axis, we are justified in choosing $h \cong H$ at the tip as the boundary condition.

In the solution for h(x) and p(x) described immediately above, a function for q(x) needs to be assumed in equation (3). However, the leakoff equation (5) must also be satisfied by this q(x).

First, h(x) and p(x), and therefore $w_o(x)$, are computed for a given fracture length a. From the width we compute area and volume of each vertical section of the fracture, and therefore the total fracture volume. Second, a similar solution is obtained for a fracture length a + da. By subtraction, we have dA in each vertical section. The rate of leakoff, λ, is monitored for it appears directly in (5), and the total amount of fluid which has leaked off is computed, in addition to the fracture volume itself, to find the total times corresponding to the two fractures of length a and a + da, and hence dt can be found. Equation (5) then gives dq/dx, and therefore q(x). This "output" flow rate q(x) must be consistent with the "input" flow rate assumed in equation (3). If not, the input q(x) is adjusted and the cycle repeated until q(x) converges.

A second iteration is required to satisfy equation (5), since before we can even use λ to calculate an output $q(x)$ from (5), we need to assume values for $\tau(x)$, the time at which leakoff begins at an arbitrary point x. This simply means we have to assume an "input" $a(t)$ before we can iterate on $q(x)$. The "output" $a(t)$ comes from the times computed from the solution for several different fracture lengths, as described above.

If the input and output $a(t)$ do not match, the input is adjusted, and the cycle repeated until they do. In practice, a power law function, $a(t) \propto t^n$, is assumed initially, then later the single power-law is replaced by two (or more) power-laws, for example

$$a_1(t) \propto t^{n_1} \qquad t < t_1$$

$$a_2(t) \propto t^{n_2} \qquad t > t_1$$

which have a common value at $t = t_1$. This is needed because in general a single power-law will be inadequate for the solution of $a(t)$.

Illustrative Result

As illustrated in Figure 6, the results of this section are restricted to the case in which the bounding layer stresses, S_2, are symmetrical about the payzone. In addition, there is no modulus contrast between pay and bounding zones. Newtonian flow is assumed. The following parameters have been used:

$H = 100$ ft	$S_2 - S_1 = 550$ psi
$K_c = 1818$ lb in$^{-3/2}$	$E = 3 \times 10^6$ psi
$\nu = 0.1$	$Q = 20$ bpm (2 wings)
$\mu(0) = 300$ cp	$C = .000635$ ft min$^{-1/2}$

The C value is an average of the tight sand values derived by Nolte.[10]

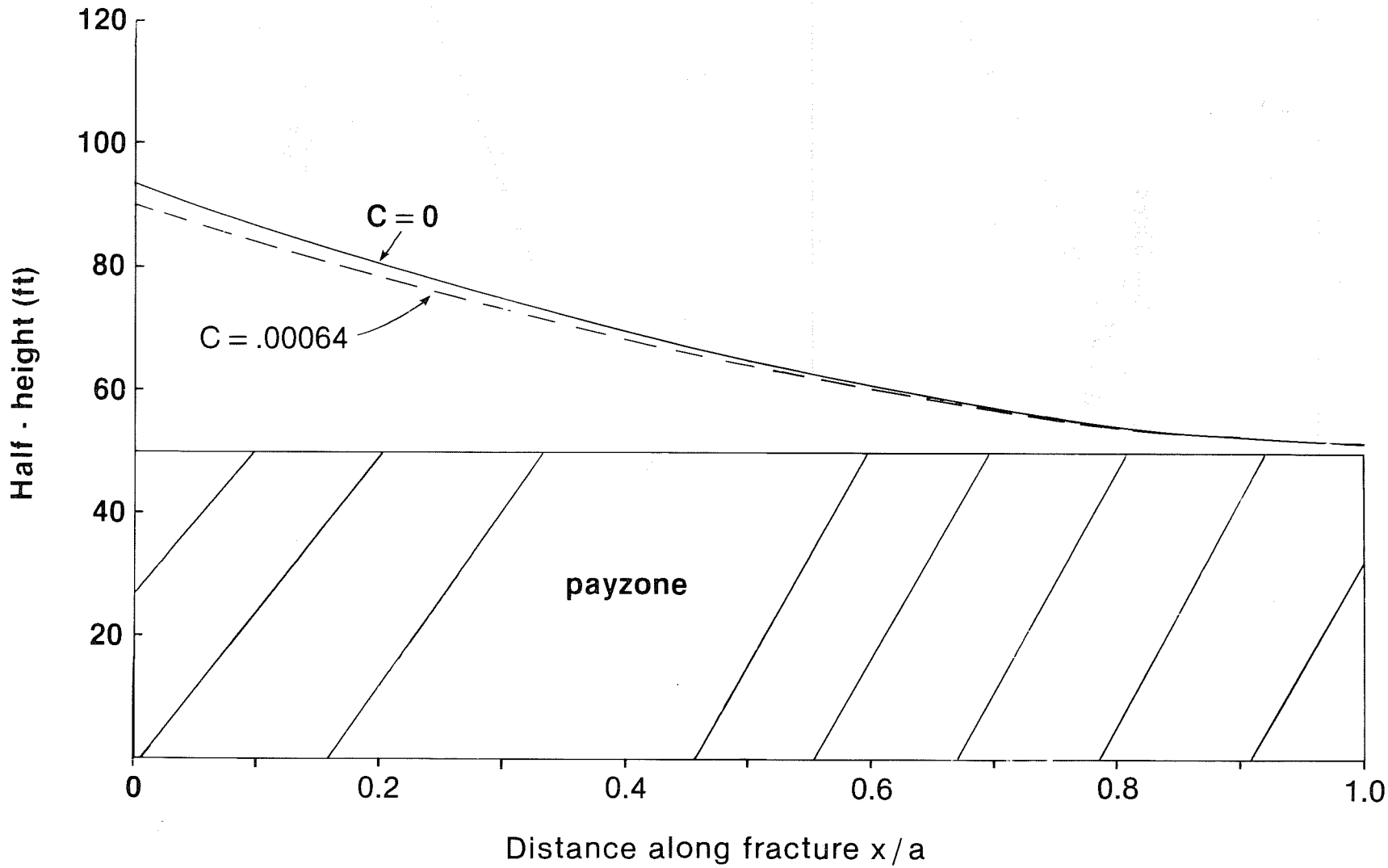

Figure 7(a). Fracture height as a function of distance along payzone in illustrative results.

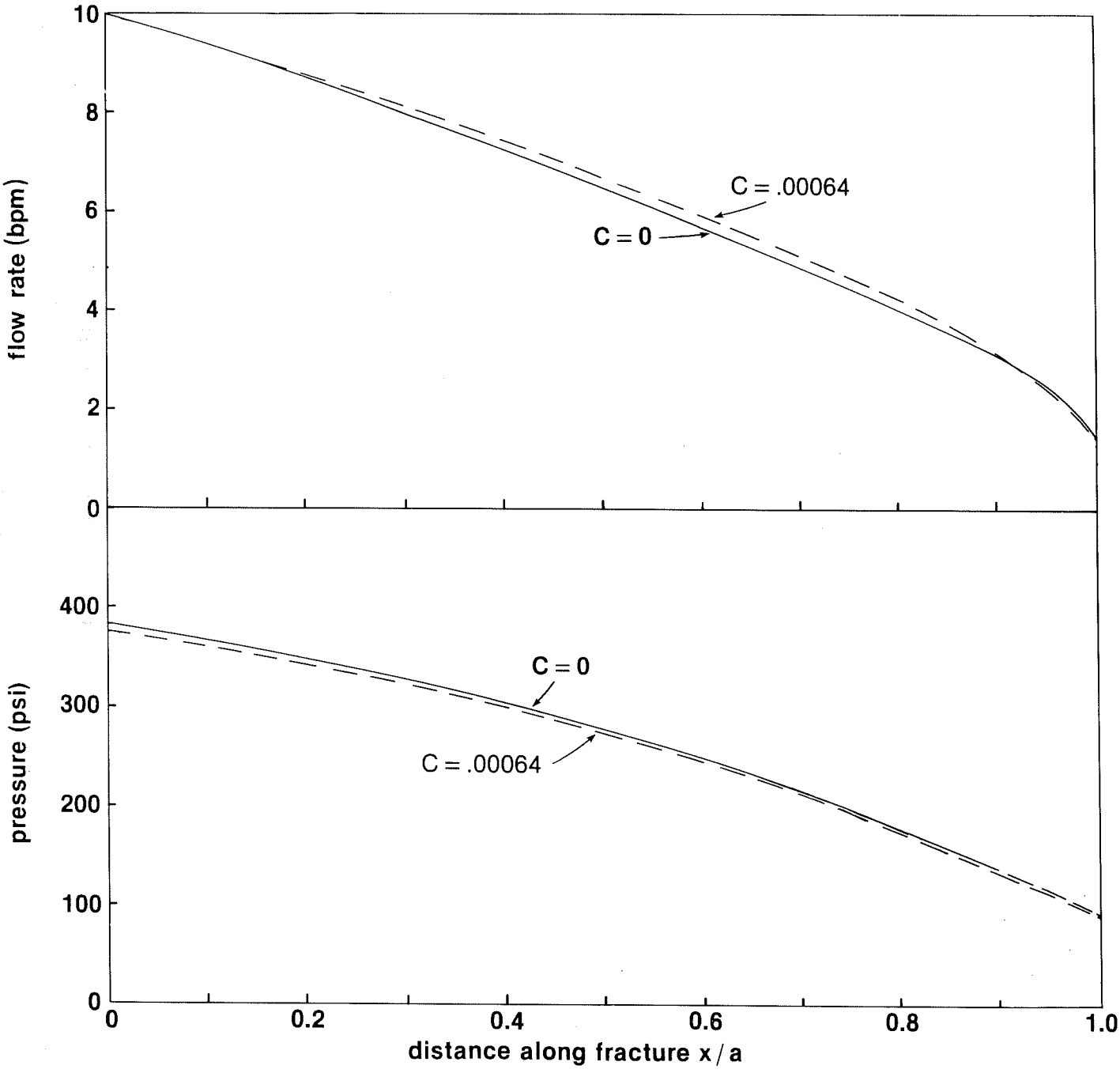

Figure 7(b). Flow rate as function of distance along payzone.

Figure 7(c). Net pressure profile in the fracture.

Figure 7 (a) displays the fracture shape. It has a more-or-less exponential form with distance along the payzone. The "corners" at $x = 0$ (where the two symmetrical wings meet) and at $x = a$ (where the fracture tip is squared off) are unrealistic: proper accounting of 3D effects will remove these, as discussed later. The pressure profile and flow rate as functions of x are shown in Figure 7 (b) and (c). The flow rate is not far from linear here, but has a finite value at the tip of the long axis.

In Figure 8 (a) is shown how the bottomhole pressure increases with time, as the fracture expands farther into the higher stress zones. The height of the fracture at the wellbore is plotted as a function of time in Figure 8 (b). The fracture expansion rate, a(t), is displayed in Figure 8 (c). In this case we restrict a(t) to two power-law segments, as described above, although more segments could be used.

Finally, Figure 9 indicates how the length/height aspect ratio changes as the fracture grows. It increases from 5 to 24 as the length increases from 400 to 3000 ft.

It is clear from these figures that the results for $C = 0$ are quite a good approximation to those for $C \lesssim .0007$ ft. $\text{min}^{-1/2}$, except in Figure 8 which involves time. It appears that leakoff effects (at small C) have only a small effect on q(x), and therefore on p and h, but a more substantial effect on time because the total volume leaked off can be a substantial fraction of the volume of liquid still in the fracture. For example, at $a = 1000$ ft, the difference in times for the leakoff and no-leakoff results of Figure 8 (c) is roughly a factor of 1.4, implying the volume leaked off is 40 percent of the volume remaining in the fracture.

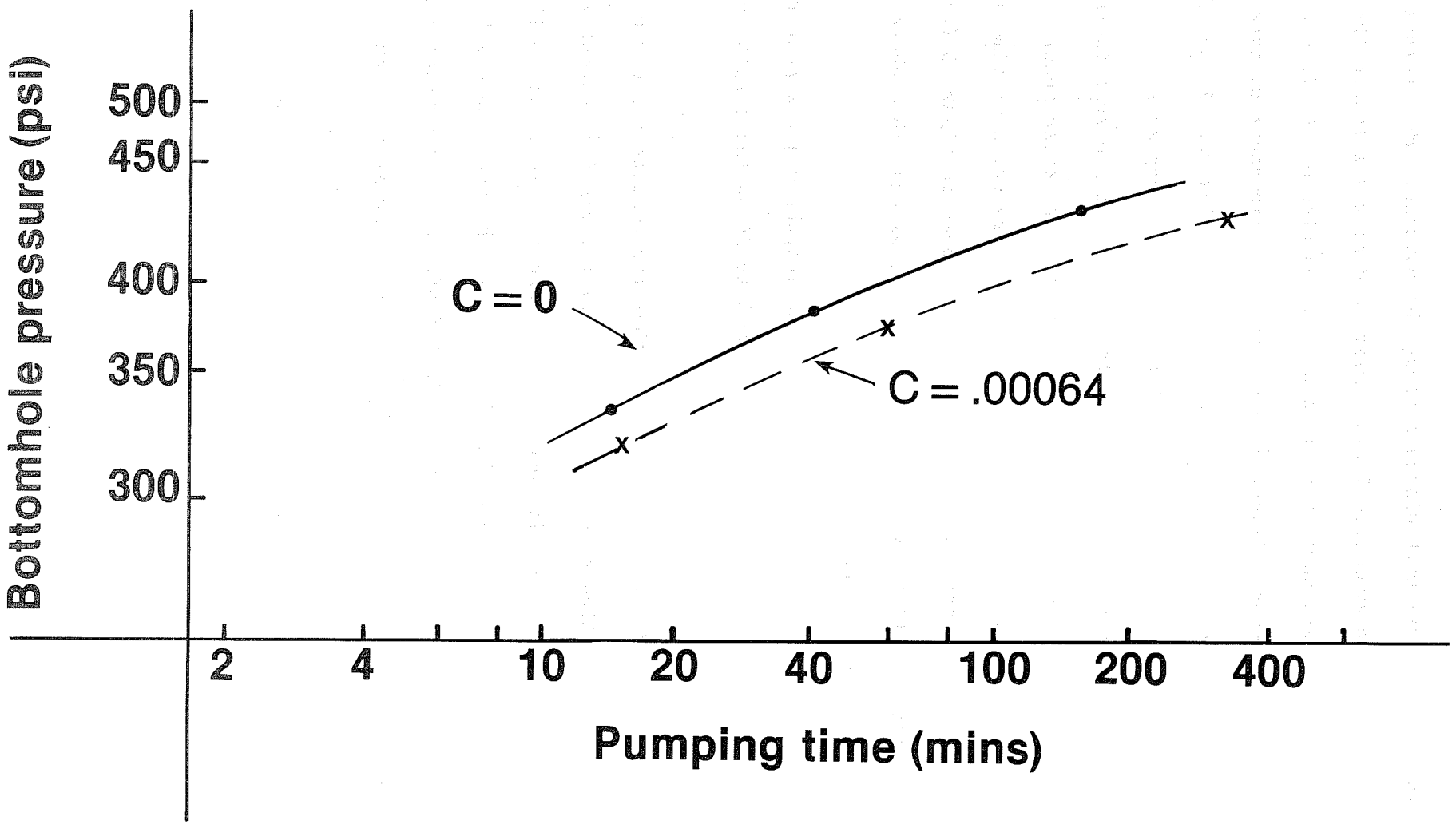

Figure 8(a). Bottomhole pressure increase with time.

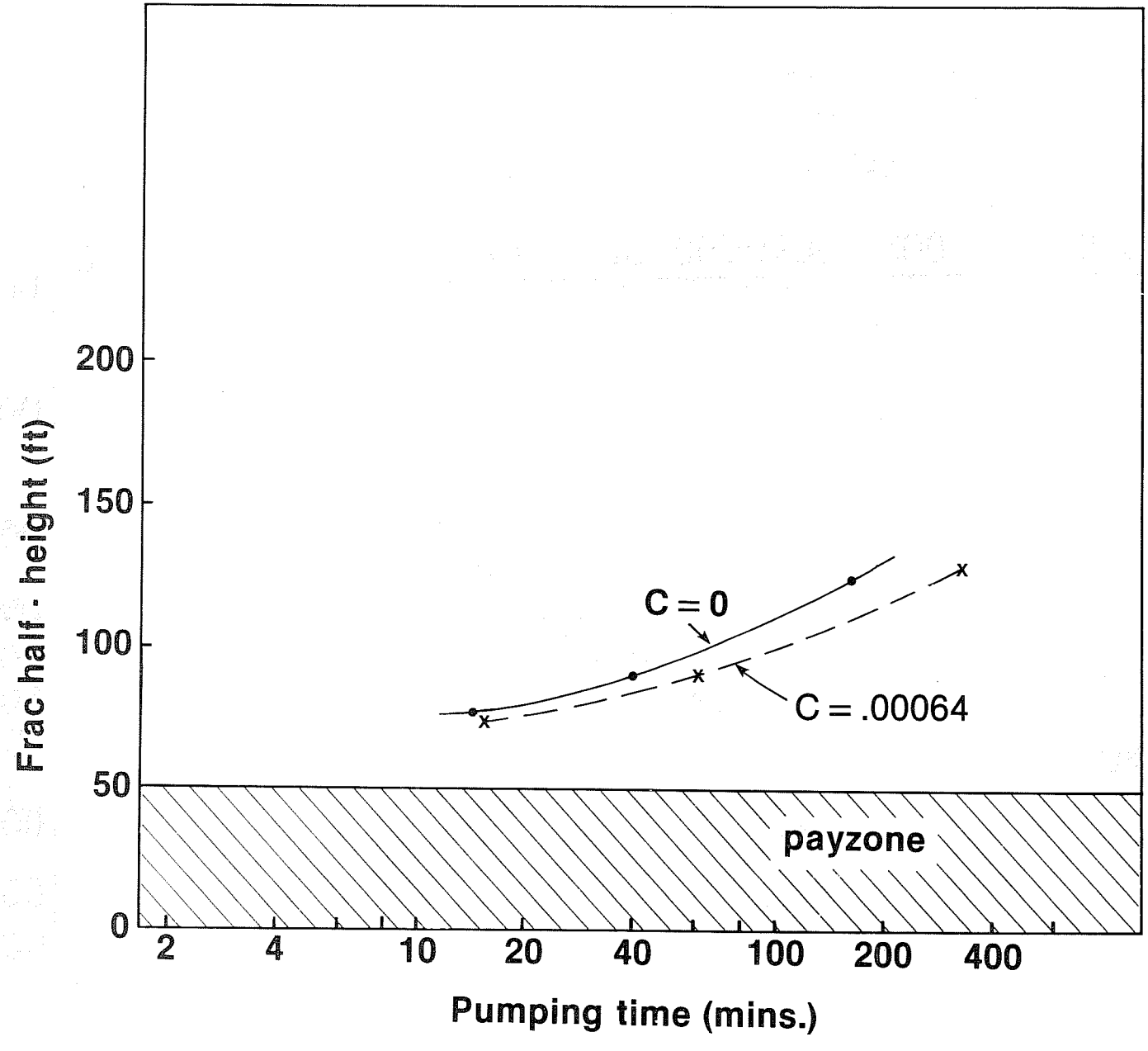

Figure 8(b). Fracture height growth with time.

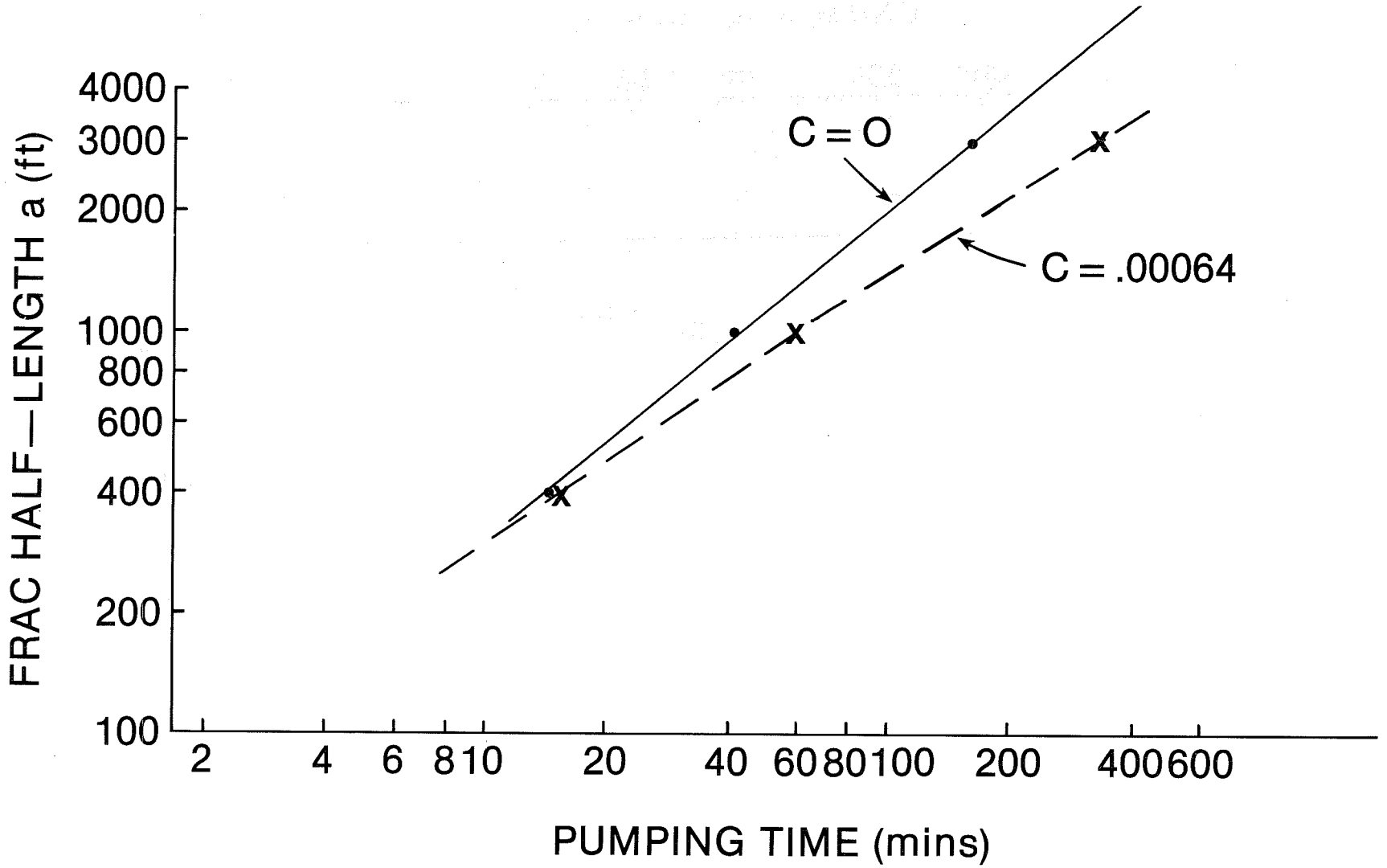

Figure 8(c). Fracture length expansion with time.

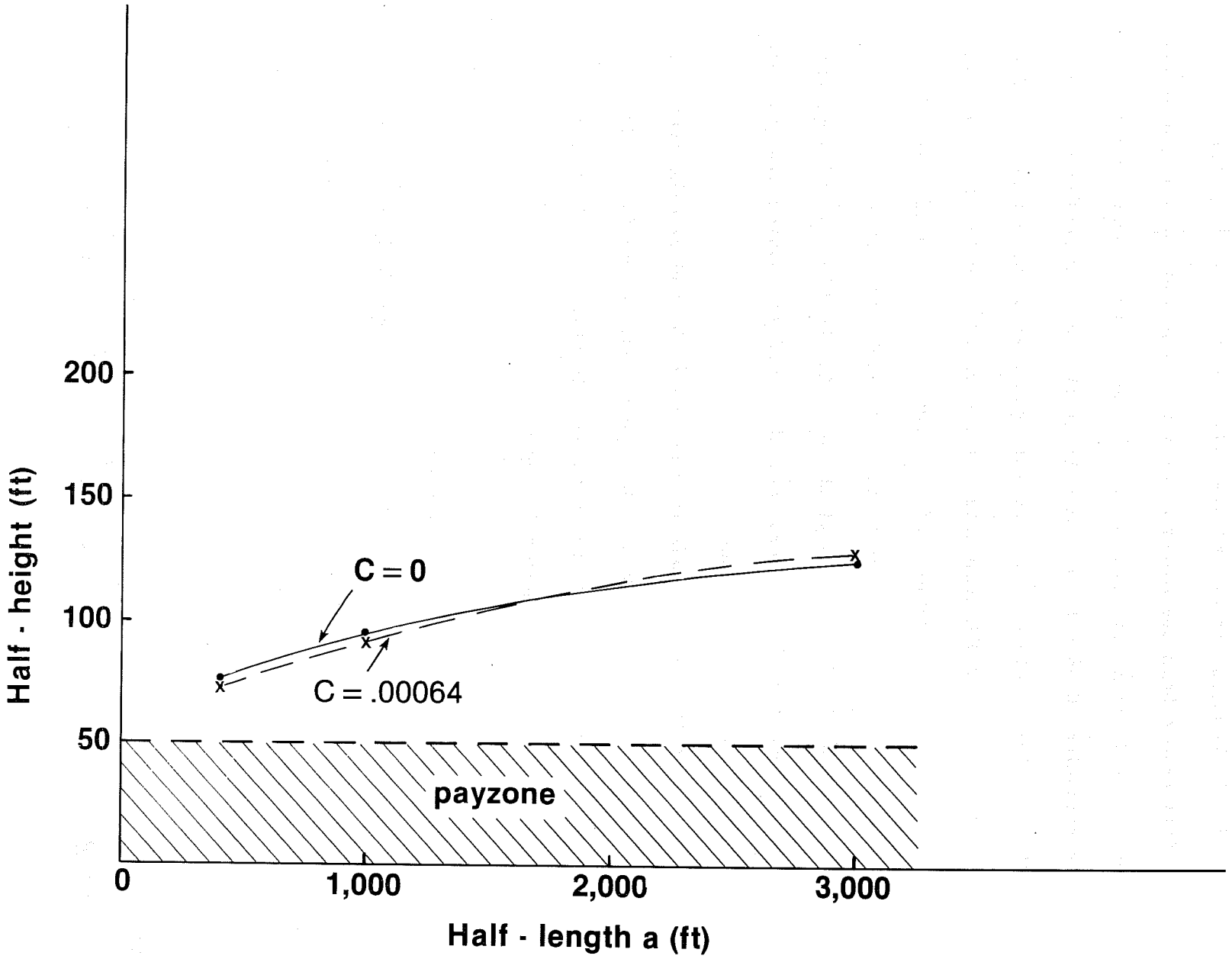

Figure 9. Fracture height versus length.

Extension to Asymmetric Stresses and Vertical Gradients of Fluid Pressure and Stress

In general, the bounding layer stresses will not be symmetric about the payzone, and furthermore both the minimum in-situ stress and the fluid pressure will vary approximately linearly with depth. To modify the present fracture model to this situation, K_i has to be computed at the top and bottom of each vertical section of the fracture. This is straightforward, as Appendix B shows.

However, the fracture width computation for each (2D) vertical section is a much more difficult task, as summarized in Appendix C. In particular, it requires lengthy computer calculations to find the width as a function of height, in order to obtain the maximum width, w_o. At the time of writing, the width calculations have been implemented, but the computer running time is long, and we are searching for ways to reduce it.

One way to reduce the computations in cases where S_2 and S_3, the bounding layer stresses, are not too different, is to assume that the maximum width, w_o, occurs at the center of the vertical section. In this case the width computations are much simpler, as shown in Appendix C.

Prediction of Fracture Height in Cozzette Sand

As an example of this we calculate the fracture height expected from a stimulation of the Cozzette sand just above 8000 ft in the upper Mesaverde formation at the Multi-Well Experiment (MWX) site in Garfield County, Colorado.

As shown in Figure 10, the upper Cozzette is bounded by Mancos shale at 7820 ft, which in all probability has a higher minimum in-situ stress (the minimum stress in the shale below 8000 ft exceeds that in the lower Cozzette by more than 1000 psi). In the Cozzette are two features important to the stimulation: (i) a coal seam at 7940 ft which could bias the investigation

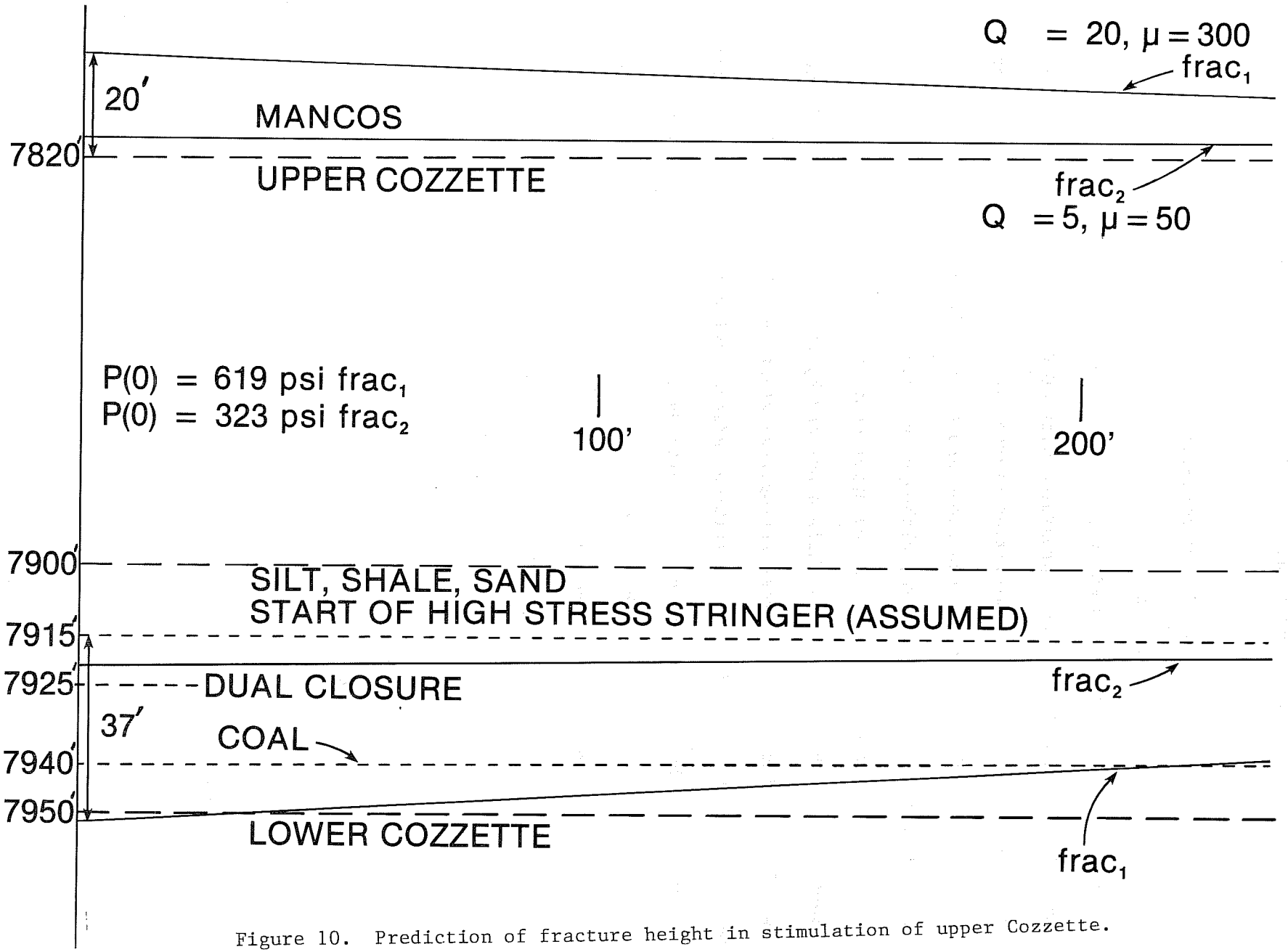

Figure 10. Prediction of fracture height in stimulation of upper Cozzette.

of gas production from the sand, and (ii) a high-stress stringer near 7925 ft which could stop a fracture originating in the upper Cozzette from reaching the coal seam.

Stress information obtained from mini-frac measurements,[12] is summarized by the fracture gradients (FG) thus: in the region 7894 - 7970 ft FG is approximately 0.86, in 8014 - 8060 ft FG is 1.02. However, at 7923 ft, the behavior indicated a dual shut-in pressure, with FG 0.98 and 0.86. The interpretation given[12] was that the mini-frac started in a low stress region, before expanding into higher stress regions above and below. The height of the high-stress stringer(s) is unknown, although one estimate[13] made was 19 ft.

A fracture which originates in the upper Cozzette will be restricted in its vertical growth by the Mancos shale above and by the stringer near 7925 ft below. By assuming the high-stress stringer(s) starts at 7915 ft (roughly midway between the beginning of the silt/shale/sand region and the dual closure measurement) and by assuming the stringer extends down to infinity, we can calculate the penetration into the stringer as a function of pumping parameters.

The fracture modeling is based on the stresses obtained from the mini-fracs. Derived stress contrasts and gradients, along with other parameters, are given in Table 1. Newtonian flow is assumed.

In obtaining flow rate, q(x), convergence, each vertical cross-section of the fracture was assumed to be elliptical in shape. In actual fact it is not, but the difference is expected to be small. Leakoff has not been included in the modeling here, but for the low C values of this region this should have little effect on the height and bottomhole pressure, as demonstrated by Figure 7.

On Figure 10 is shown the perimeter of frac 1, corresponding to Q = 20 bpm, $\mu(0)$ = 300 cp. The fracture extends 37' into the high-stress stringer at the wellbore, and the bottomhole pressure is 619 psi (above minimum stress). The

Table 1

Parameters used in Modeling the Cozzette Sand Stimulation

a = 1000 ft (the desired half-length)

S_3-S_1 = 7740-6850 = 890 psi (stress contrast at lower barrier from dual closure measurements)

S_2-S_1 = 7976-6764 = 1212 psi (stress contrast at upper barrier from .865 psi/ft gradient measured in Cozzette and 1.02 psi/ft in Mancos - assumed same as measured in shales at 8000 ft)

S gradient = .865 psi/ft in Cozzette (measured)
= 1.02 psi/ft in Mancos (assumed)
= .98 psi/ft in stringer (measured)

p_f gradient = .43 psi/ft (water base)

H = 95 ft (7820 to 7915 ft - this allows that high-stress stringer may begin 10 ft above dual closure measurement)

K_c = 1818 lb $in^{-3/2}$ (assumed)

E = 5 x 10^6 psi (inferred from cores, assumed same in all zones)

ν = .22 (inferred from cores, assumed same in all zones)

Q, $\mu(0)$ pumping parameters varied in the following combinations (20 bpm, 300 cp), (10 bpm, 100 cp), (5 bpm, 50 cp).

maximum fracture width is .81 cm. Stating the result in another way, if there were 37 integrated feet of high-stress stringer above the coal seam, it would prevent the fracture from hitting the seam (however, between 7900 and 7940 ft there is unlikely to be 37 ft of high-stress material). Note that the 37 ft result is only slightly altered if the stringer is assumed to begin at 7900 or 7925 ft. Finally, the height at the wellbore will actually be slightly less than 37 ft because the abrupt angle formed at the wellbore by the fracture perimeter and its mirror image will be "smoothed-out" by 3D effects neglected in our modeling.

In contrast, when Q is reduced to 5 bpm, and $\mu(0)$ to 50 cp, penetration into the high-stress stringer is only 6 ft (also shown in Figure 10). The bottomhole pressure is 323 psi, and the maximum fracture width is .37 cm.

A summary of the results is given in Figure 11, which shows how the penetration into the high-stress stringer(s) depends on the product of pumping rate, Q, and viscosity, $\mu(0)$. The figure also shows how bottomhole pressure and maximum width depend on $Q\mu$. The preliminary conclusion is that it may be possible to stop a 1000 ft fracture from reaching the coal seam. It depends mostly on the integrated thickness of the high-stress stringer(s) above the coal seam. For example, if it were 15 ft thick, pumping rates less than 12 bpm and viscosities less than 100 cp would stop the fracture (see Figure 11). If the stringer were 25 ft thick, a $Q\mu$ product close to 3000 would be possible, without hitting the coal seam (e.g., Q = 10 bpm, $\mu(0)$ = 300 cp).

Limitations of the Modeling

1. Equation (4), as shown in Appendix A, is based on the static limit for fluid flow in the vertical direction. When fluid flow rates become substantial, the result departs from the static limit (e.g., see Abe,

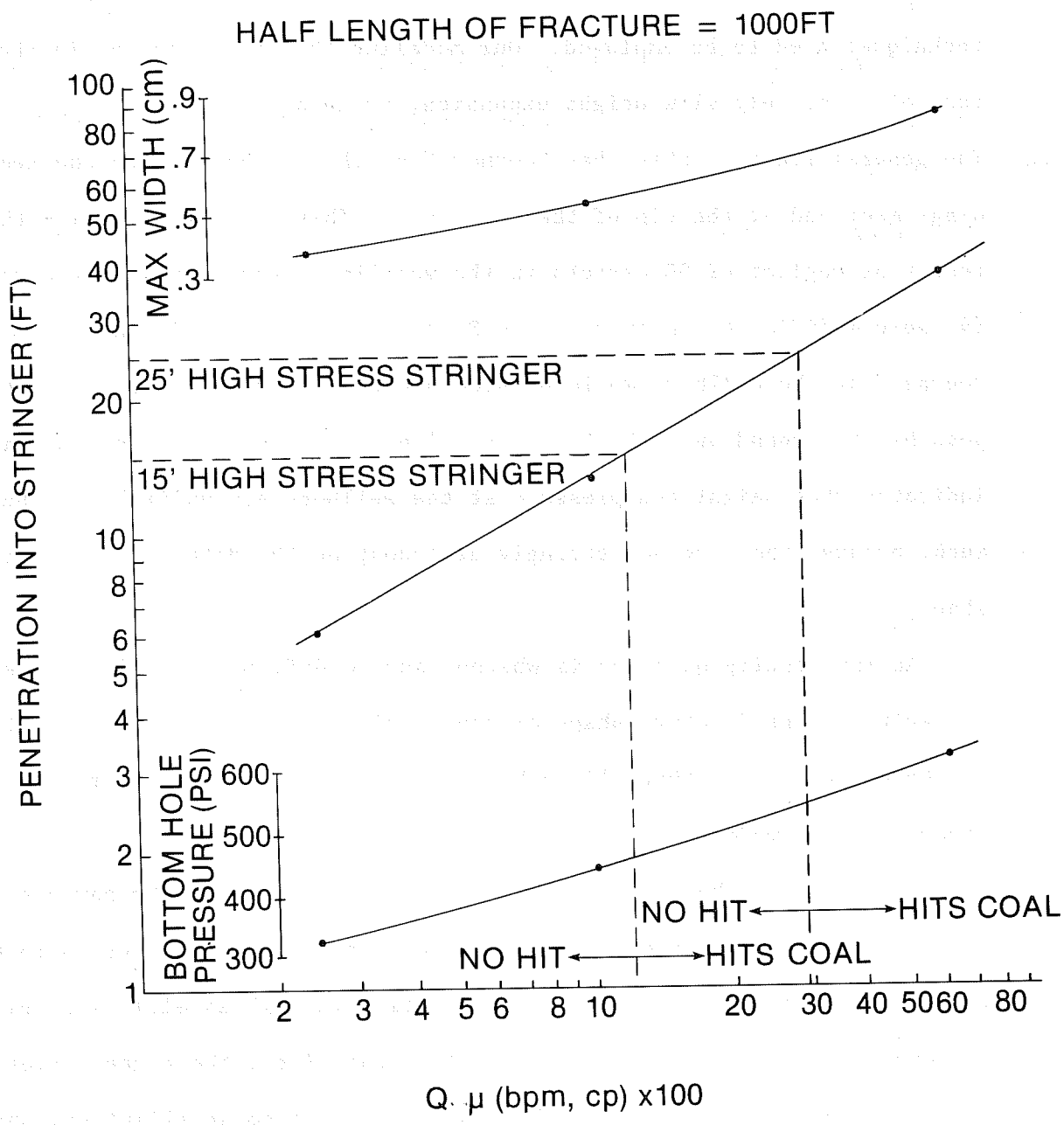

Figure 11. Prediction of fracture penetration into high-stress stringer as a function of pumping parameters.

et al.[14]) and the formulation becomes so complicated that numerical techniques need to be employed. Our modeling therefore applies in the case of relatively slow height expansion, or $dh/dt \ll da/dt$.

2. The general fracture shape has "corners" at the wellbore where the two wings meet and at the tip of the long axis. These are artificial - the result of neglect of 3D effects in the modeling. For example, if equation (4) were modified by an appropriate 3D correction factor for K_i, the "corner" at the wellbore would be smoothed out. Similarly it should be possible to "round out" the tip of the long axis. However, our experience indicates that height and pressure at the wellbore are unlikely to change much, because they are not strongly dependent on the details of the fracture shape.

   An interesting question is whether such modifications will remove the concavity in the fracture shape presently visible in Figure 7 (a). It has been suggested[13] that all such concavity is an artifice of the 2D aspects of the modeling.

3. The fluid behavior has been approximated by 1D flow along the payzone direction. We have assumed the flow through each vertical section to be the classical case of viscous, Newtonian flow through an elliptical pipe of height, h, and maximum width, w_o. In actual fact, the higher stresses in the bounding layers distort the cross-section from an elliptical shape. The solution appears to be to adapt equation (3) to the shape of each vertical section in the fracture.

4. Another limitation is the neglect of 2D fluid flows. Since the fracture is expanding vertically, there will be a component of flow in this direction and equation (3) will have to be modified. However, for our situation of $dh/dt \ll da/dt$, the difference should not be great.

5. Newtonian flow is assumed, but it should not be difficult to adapt the fluid flow equation to non-Newtonian.

6. When the payzone height, H, is small, the fluid pressure becomes too high to satisfy the quasi-static $K_i = K_c$ formulation used. It seems that in such cases the high pressure drives the vertical fracture expansion so rapidly that the quasi-static $K_i = K_c$ is inadequate (see 1. above).

IV PRELIMINARY MODELING IN LENTICULAR SANDS

In the Piceance basin, a sandstone lens typically has a thickness of $\lesssim$ 50 ft, width $\lesssim$ 400 ft, length a few thousand feet, and is crescent-shaped.[20] Even if the minimum in-situ stress is horizontal and in a constant direction (conditions seemingly favorable for a vertical fracture to stay in its own plane), there are a large number of possible geometries for a fracture intersecting a lens.

Two of the simplest scenarios are shown in Figure 12. We assume the lens is horizontal, and has a rectangular shape in its vertical section, but is of limited length. While K_c and E are assumed the same in the lens and surrounding shale, allowance is made for a stress contrast $S_2 - S_1$. In (a) the fracture is initiated at the center of the lens. In (b) the fracture begins in shale, but then intersects two identical lenses situated symmetrically some distance on each side of the wellbore. In both cases, everything is symmetrical about the x and y axes. Furthermore, any effects associated with the fracture crossing the interface between lens and shale are ignored.

Here we focus attention on Figure 12 (b). The fracture will be roughly circular, if the perforated interval is small, until it reaches the lens. In this case, the equations of Abe et al.[14] can be used to find the bottomhole pressure. Thereafter, the lower stress in the lens should encourage preferential

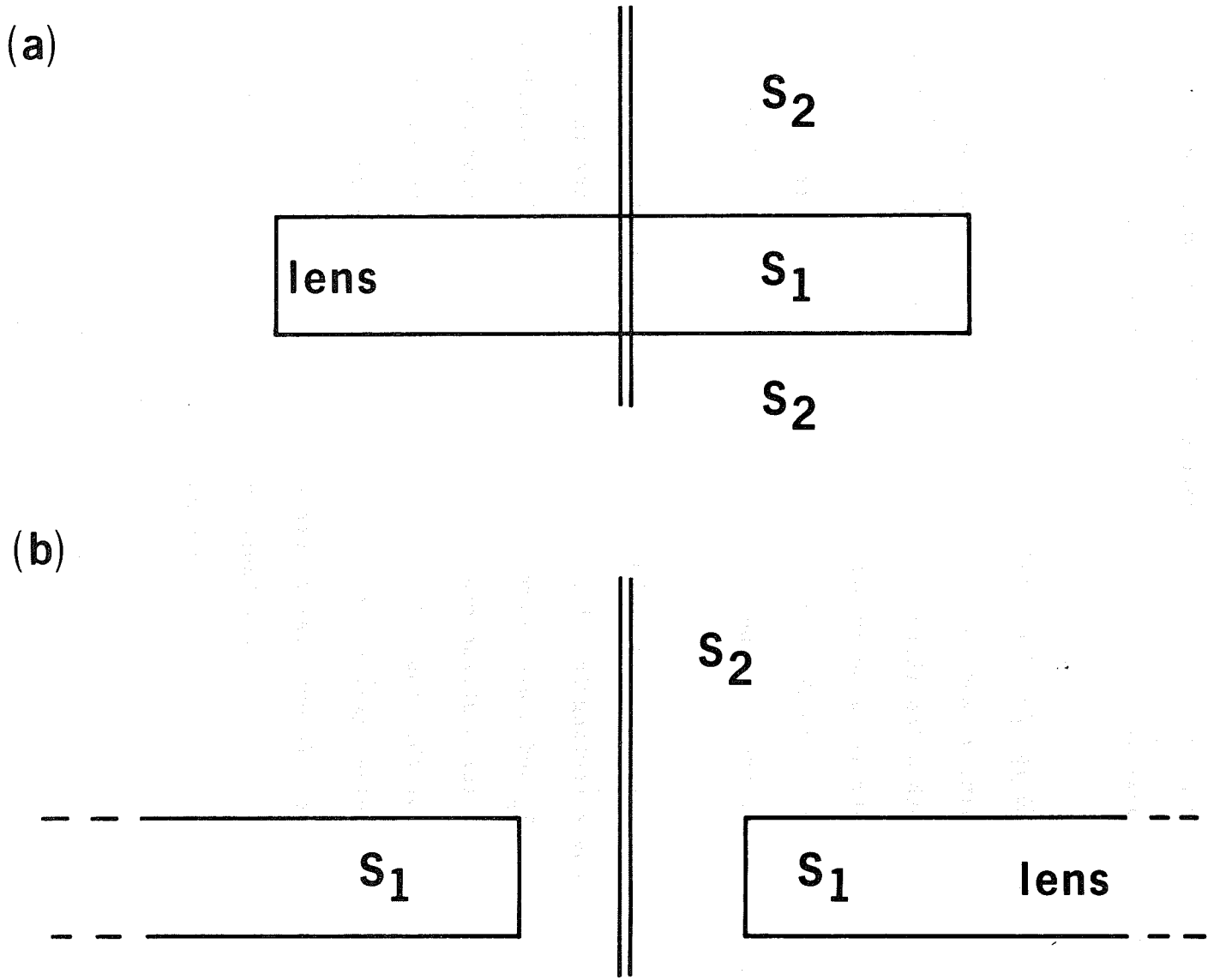

Figure 12. Simple geometries in lenticular sand.

propagation down each lens. Now, if the horizontal stiffness could be neglected for the moment, there would be a discontinuous decrease in fracture height at the lens due to the discontinuous change in stress and therefore net pressure there (this would have to be so if K_i were to be the same on each side of the lens). Following this line of thought, we model the fracture height variation near the start of the lens by a discontinuity, even when horizontal stiffness is included. This and the other portions of assumed fracture shape, are shown in Figure 13.

If the preferential propagation of the fracture down the lens modifies the flow to be approximately linear, then we can use the same p(w) equation as in the blanket sand case. Furthermore, even though the horizontal stiffness will not allow a discontinuous change in fracture width at $x = R_\ell$, we can try the vertical 2D line crack representation as a first-order approximation to w(p). A more accurate w(p) in this complicated geometry would require a numerical computation. Using model FL2, and starting with the boundary condition $p(a) = 0$, we can now solve for p(x) back to $x = R_\ell$ for a given fracture height d at R_ℓ. Finally, we can solve for p(x) back to x = 0 subject to the boundary condition $K_{ib} = K_c$.

To roughly account for the effect of horizontal stiffness on K_{ib}, two extremes are considered: (i) b = d, in which case K_{ib} is based on that for a line crack in a vertical section at x = 0. In the manner of a blanket sand we assume at the wellbore that the stress changes at a depth corresponding to the top and bottom of the lenses. In the region between the lenses we define an effective stress (in place of S_1). This effective S_1 is taken to be the average of S_1 and S_2 weighted by distance along the x axis, to account for the influence of the adjacent lenses, where higher net pressures will act to increase K_{ib} at x = 0 above that for a line crack. Above and below the lenses,

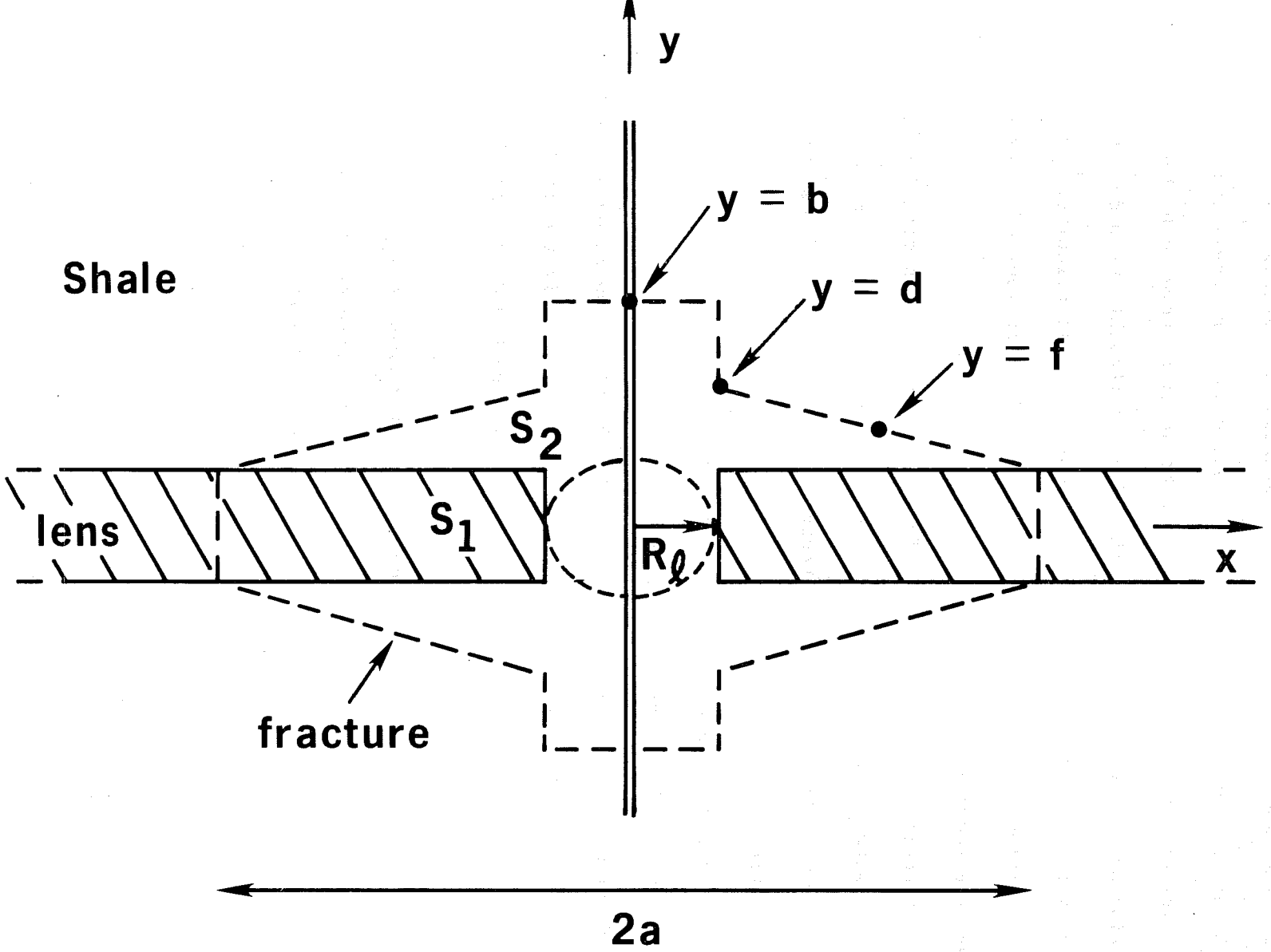

Figure 13. Fracture shape for Figure 12(b).

and still at the wellbore, we assume the stress is S_2. (ii) $b >> d$, in which case K_{ib} will be influenced more by the neighboring vertical "walls" at $x = \pm R_\ell$, than by fracture extent in the lenses. We take K_{ib} to be equal to that for a rectangular crack[15] of short side $2R_\ell$ and pressure $p(0) = p_f(0) - S_2$. Now we extrapolate between the extremes (i) and (ii), using an exponential function, to find K_{ib} for a given b.

One set of results is portrayed in Figure 14. The stress contrast is 100 psi, the height of the lens is 50 ft., R_ℓ = 100 ft., and fracture half-length a = 500 ft. It can be seen that $K_{ib} = K_c = 3 \times 10^8$ d/cm$^{3/2}$, for instance, can be satisfied by various combinations of b and d. In fact, b decreases as d increases, and obviously the condition $K_i = K_c$ needs to be applied at some other point on the fracture perimeter (points d or f in Figure 13 would be good candidates).

Since a convex "corner" such as that at d would tend to have a high value of K_i, this would tend to force d towards the higher end of its range in Figure 14. Thus, in the absence of another $K_i = K_c$ condition, the asymptotic limits (for large d) of half-height b and bottomhole pressure might be the most likely values.

The curves for $K_{ib} = K_c = 4 \times 10^8$ d/cm$^{3/2}$ would indicate a lower fracture height but a greater bottomhole pressure, as compared with $K_{ib} = K_c = 3 \times 10^8$ d/cm$^{3/2}$. The asymptotic fracture heights in these two cases would imply aspect ratios α = 2.6 - 3.8.

These results are really only qualitative, but are a first step towards modeling fracture propagation in lenticular gas sands. Clearly, better width and flow equations, as well as application of $K_i = K_c$ to other points o the fracture perimeter, are needed.

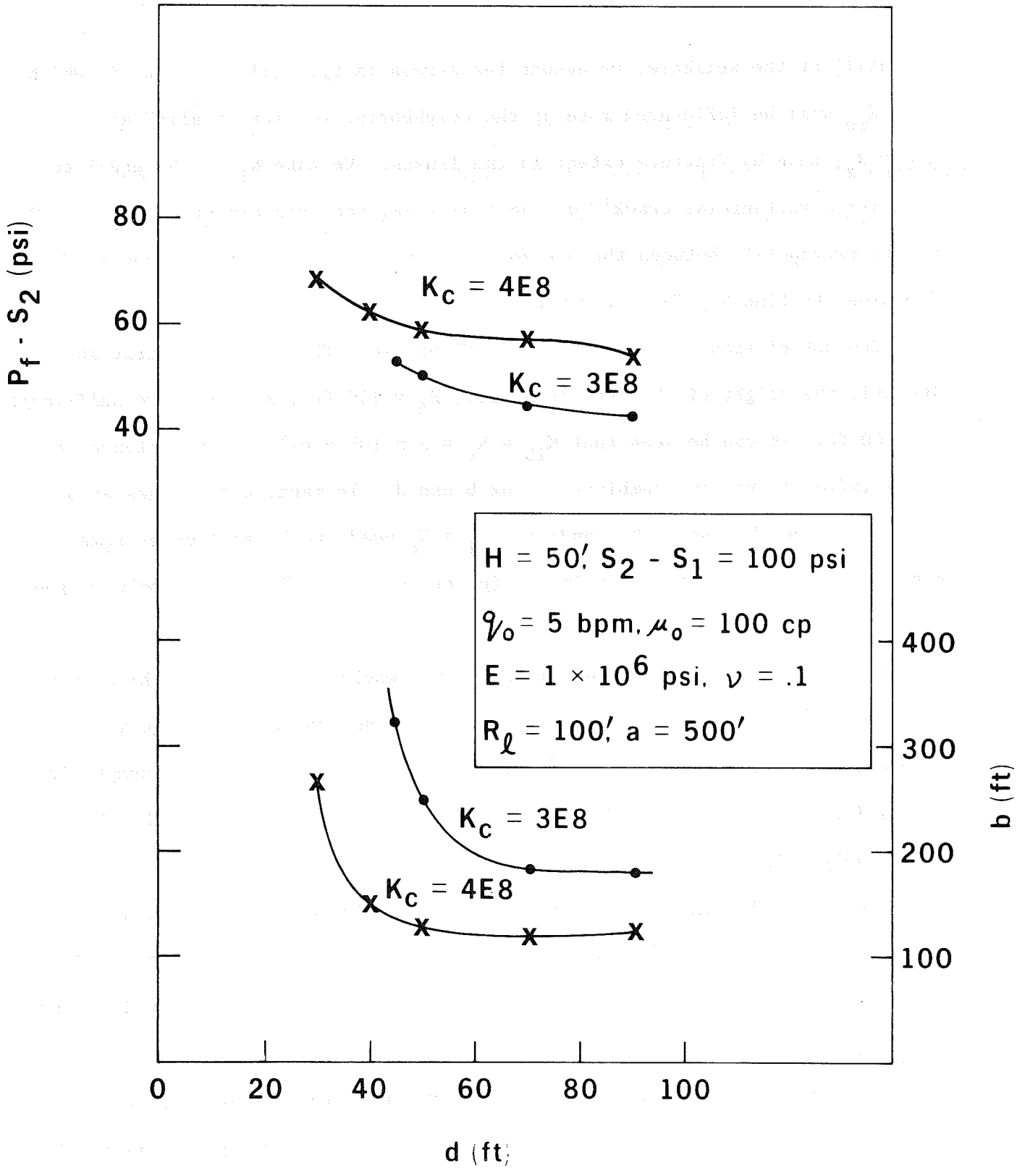

Figure 14. Preliminary results from lenticular sand modeling.

V CONCLUSION

Computer codes for models FL1 and FL2 are available[7].

We have described models for hydraulic fracture expansion in blanket sands bounded by zones of higher, but equal, minimum in-situ stresses. The models are 3D in the sense that fracture height is not constant with distance along the payzone. However, the fluid flow is limited to 1D flow in the direction of the payzone. The models first discussed assume an elliptical fracture shape, then solve the width and pressure equations, subject to the fracture criterion $K_i = K_c$ at one or two points on the fracture perimeter, to obtain height and pressure at the wellbore.

Due to the approximations used, the principal limitation of the modeling is that the fracture be elongated (length/height ratio $\gtrsim 5$), that is, the rate of height growth be much less than the rate of length expansion.

It is found that wellbore height and pressure are almost independent of the details of fracture height and pressure (and therefore K_i) at the tip of the long axis (including the near tip "vacuum" region).

Although leakoff has been neglected here, subsequent modeling results with it show that for leakoff coefficients $C \lesssim .001$ ft min$^{-1/2}$ the results herein are a good approximation to the case when leakoff is included. The other results also show that our assumed form for $q(x) = q(0)\ (1-x/a)$ is an adequate approximation to the actual $q(x)$ which comes out of the full solution with leakoff. Wellbore height and pressure are not very sensitive to this $q(x)$ difference.

Similarly, subsequent modeling in which $K_i = K_c$ is satisfied at many points around the fracture perimeter (instead of just one or two here) indicates that the results herein for wellbore height and pressure are a good approximation. Evidently the height and pressure are not very sensitive to the details of

fracture shape.

Through a parameter study, the comparative effects of stress contrast, payzone height, elastic modulus (assumed same in pay and bounding zones), and fracture toughness have been examined for their influence on wellbore height and pressure. Changing the fracture toughness in the bounding zones by a factor of 2 has much less effect than changing any of the other parameters by a factor of 2.

When fracturing a payzone of less height, the results of Figure 2 and 3 indicate that the wellbore height and pressure will be greater, and therefore higher bounding zone stresses will be required to confine the fracture.

Similarly, when fracturing a formation with higher elastic modulus, Figures 2 and 4 reveal that the wellbore height and pressure will be greater.

Two different forms for the fluid flow are assumed in the models: (i) the fluid flows through the entire vertical section, (ii) the bulk of the flow and viscous loss occurs in the payzone, not in the "wings." In the latter case there are situations when rapid height growth sets in, and becomes conspicuous as the confining stresses are reduced. The results of this paper may be useful in controlling the pumping parameters, for example, to avoid such "divergent" height behavior.

We have also developed a model of hydraulic fracture expansion which can predict height growth and bottomhole pressure behavior as a function of time when the fracture shape is not assumed, and when leakoff is included. Again, the main limitation is that the height growth must be slow compared with the length extension. At present the model works in a three-layer case in which the higher bounding stresses are symmetric about the payzone. Illustrative results have been presented. The fracture height decreases more-or-less exponentially with distance along the payzone. The "corners" at the wellbore

and the tip of the long axis are artificial; proper accounting of 3D elasticity should smooth these out. The flow rate along the fracture is not far from linear in this example, but has a finite value at the tip of the long axis. How bottomhole pressure, fracture height, and fracture length increase with time is illustrated. The length/height ratio of the fracture increases, as the fracture grows, from 5 at a = 400 ft to 24 at a = 3000 ft. It may be concluded that the results for $C = 0$ are a good approximation to those for $C \lesssim .001$ ft $min^{-1/2}$, except where the results involve time. Apparently this is because leakoff has a minimal effect on q(x), which determines pressure and height, but a substantial effect on time because the total volume leaked off can be a substantial fraction of the volume of fluid in the fracture.

The model for bounding zone stresses symmetric about the payzone is being extended to the case in which the stresses are asymmetric. Meanwhile, an approximate solution is available when the asymmetric bounding stresses are not too different, but leakoff is not included. This has been used to estimate fracture height growth in the Cozzette sand which was planned to be stimulated as part of the Multi-Well Experiment. In particular, whether the fracture would penetrate a coal seam was investigated as a function of pumping parameters.

Finally, a simple lenticular scenario is explored in which a fracture, initiated between two lenses, then fractures each lens. The investigation is only preliminary because horizontal elastic stiffness is ignored, although it really cannot be. However, the discussion does illustrate one approach to the problem of stimulating an individual lens, and we believe this approach will be fruitful.

Acknowledgement

Grateful thanks are expressed to Linda Nolte and Robert Craig for superb programming support.

Nomenclature

a = fracture half-length

b = fracture half-height at wellbore

C = leakoff coefficient

E = Young's modulus

f_ℓ = fractional extent of 2D line crack

$f_{\ell 1} = H/h$

h = fracture height

H = payzone height

K_i = stress intensity factor

K_c = fracture toughness

μ = fluid viscosity

ν = Poisson's ratio

ℓ = half-height of 2D line crack

p_f = fluid pressure

$p = p_f - S$ = net fluid pressure

p_o = net bottomhole pressure

p_{o1}, p_{o2}, p_{o3} = vertical net pressure gradients in three zones

q = flow rate (one wing)

Q = inlet flow rate (both wings)

S_1 = minimum in-situ stress in payzone

S_2, S_3 = minimum in-situ stresses in bounding layers

t = time

$\tau(x)$ = time at which fracture reaches x and leakoff begins

$w(f_\ell)$ = width of 2D crack in vertical section

w_o = maximum width of crack in vertical section

x = horizontal distance along payzone

y = vertical distance along 2D line crack

References

1. Simonson, E. R., A. S. Abou-Sayed, and R. J. Clifton, "Containment of massive hydraulic fractures," Soc. Pet. Eng. J., 18, 27, February 1978.

2. Cleary, M. P., "Comprehensive design formulae for hydraulic fracturing," 55th Ann. Tech. Conf. & Exhib. of SPE, Dallas, SPE 9259, 1980.

3. Settari, A. and M. P. Cleary, "Development and testing of a pseudo-three-dimensional model of hydraulic fracture geometry (P3DH)," SPE 10505, Sixth SPE Symp. Reservoir Simulation, New Orleans, Feb. 1982.

4. Nolte, K. G. and M. B. Smith, priv. comm., 1981.

5. Clifton, R. J. and A. S. Abou-Sayed, "A variational approach to the prediction of the three-dimensional geometry of hydraulic fractures," Symp. Low Permeability Gas Reservoirs, Denver, SPE/DOE 9879, 1981.

6. Sinha, K. P., "Development of 3D simulator for hydraulic fracturing," pres. at Unconventional Gas Recovery Simulation Workshop, Morgantown, October 1982.

7. Palmer, I. D., "Numerical model of massive hydraulic fracture," First Annual Report, Sep. 1980-Aug. 1981, DOE/BETC.

8. Shah, R. C. and A. S. Kobayashi, "Stress intensity factor for an elliptical crack under arbitrary normal loading," Eng. Fracture Mechs., 3, 71, 1971.

9. Lamb, H., Hydrodynamics, 6th Ed., Dover Publications, Inc., New York, 1963.

10. Nolte, K. G., "Determination of fracture parameters from fracturing pressure decline," 54th Ann. Fall Tech. Conf. and Exhib. of SPE, Las Vegas, SPE 8341, 1979.

11. Nordgren, R. P., "Propagation of a vertical hydraulic fracture," Soc. Pet. Engrs. J., 12, 306, 1972.

12. Warpinski, N. R., "Initial MWX-2 stress test data - Cozzette," priv. comm, 1982.

13. Abou-Sayed, A. S., priv. comm., 1982.

14. Abe, H., T. Mura, and L. M. Keer, "Growth of a penny-shaped crack in hydraulic fracturing of rocks," J. Geophys. Res., 81, 29, 5335, 1976.

15. Weaver, J., "Three-dimensional crack analysis," Intl. J. Solids and Structures, 13, 321, 1977.

16. England, A. H. and A. E. Green, "Some two-dimensional punch and crack problems in classical elasticity," Proc. Cambridge Phil. Soc., 59, 489, 1963.

17. Palmer, I. D. and H. B. Carroll, Jr., "3D hydraulic fracture propagation in the presence of stress variations," SPE/DOE 10849 pres. at Unconventional Gas Recovery Symp., Pittsburgh, May 1982.

18. Rice, J. R., "Mathematical analysis in the mechanics of fracture," in Fracture - an Advanced Treatise (ed. H. Liebowitz), Academic Press, New York, Vol. II, 1968.

19. Daneshy, A. A., "Opening of a pressurized fracture in an elastic medium," paper 7616 pres. at 22nd Ann. Tech. Mtg. of Pet. Soc. of CIM, Banff, June 1971.

20. Knutson, C. F., "Modeling of noncontinuous Fort Union and Mesaverde sandstone reservoirs, Piceance basin, Northwestern Colorado," Soc. Pet. Eng. J., 175, Aug. 1976.

Appendix A

Details of solution for h(x) and p(x)

1. Width equation

For bounding-layer stresses which are symmetrical about the payzone and for elongated fractures (e.g., see Figure 6), the width equation for a 2D line crack in each vertical section is[16]

$$w(f_\ell) = \frac{8(1-\nu^2)\ell}{\pi E} \int_{f_\ell}^{1} \frac{f_2\, df_2}{\sqrt{f_2^2 - f_\ell^2}} \int_0^{f_2} \frac{p(f_1)\, df_1}{\sqrt{f_2^2 - f_1^2}} \tag{A1}$$

where f_1, f_2 and $f_\ell = y/\ell$ are fractions of the vertical half-height, ℓ, of the crack. Now with

$$p(y) = \begin{cases} p_f - S_1 & |y| < H/2 \\ p_f - S_2 & |y| > H/2 \end{cases}$$

equation (A1) leads to

$$\frac{\pi E\, w(f_\ell)}{8(1-\nu^2)(h/2)} = \int_{f_\ell}^{f_{\ell 1}} \frac{f_2\, df_2}{\sqrt{f_2^2 - f_\ell^2}} \left[\frac{\pi}{2}(p_f - S_1)\right]$$

$$+ \int_{f_{\ell 1}}^{1} \frac{f_2\, df_2}{\sqrt{f_2^2 - f_\ell^2}} \left\{ \frac{\pi}{2}(p_f - S_1) \left[1 - \frac{2}{\pi}\left(\frac{S_2 - S_1}{p_f - S_1}\right) \cos^{-1}\left(\frac{f_{\ell 1}}{f_2}\right)\right]\right\} \tag{A2}$$

where $f_{\ell 1} = H/h$, and ℓ has been replaced by h/2. This can be solved numerically for any $w(f_\ell)$ or $w(y)$. To obtain an analytic expression for $w_o = w(0)$, set $f_\ell = 0$, which leads to[17]:

$$w_o(x) = \frac{2(1-\nu^2)}{E}\, h(x)\, (p_f - S_1)$$
$$\cdot \left[1 - \frac{2}{\pi}\left(\frac{S_2 - S_1}{p_f - S_1}\right) \left\{ \cos^{-1}(f_{\ell 1}) - f_{\ell 1} \ln\left(\frac{1+\sqrt{1-f_{\ell 1}^2}}{f_{\ell 1}}\right)\right\}\right] \tag{A3}$$

In this equation, $w_o(x)$, along with h, and $p = p_f - S_1$, is a function of distance, x, along the fracture. Finally, this equation assumes $h > H$. If $h < H$, the pertinent equation for $w_o(x)$ is obtained by setting $S_2 = S_1$.

2. Pressure drop equation

For 1D Newtonian flow along the payzone, the Poiseuille equation[9] with $p = p_f - S_1$, is

$$\frac{dp(x)}{dx} = \frac{-64}{\pi} \frac{q(x)\ \mu(x)}{w_o^3(x)h(x)} \tag{A4}$$

as described under equation (1) in the text. The fluid viscosity, $\mu(x)$, will decline with x due to temperature rise and fluid degradation. Following Nolte,[10] we take $\mu(x) = \mu(0)\ (1-x/a)$.

3. Fracture expansion criterion

The stress intensity factor for a 2D line crack of half-length ℓ is given by[18]

$$K_i = \frac{1}{\sqrt{\pi\ell}} \int_{-\ell}^{+\ell} p(y)\ \left(\frac{\ell+y}{\ell-y}\right)^{\frac{1}{2}} dy$$

For relatively slow vertical expansion, p(y) will be approximately as given above under 1. (i.e., p_f does not vary with y and the near-tip region of zero p_f is neglected), and K_i becomes, with ℓ replaced by h/2.

$$K_i = (p_f - S_1) \sqrt{\pi \frac{h}{2}}\ [1 - \frac{2}{\pi} \left(\frac{S_2 - S_1}{p_f - S_1}\right) \cos^{-1} \left(\frac{H}{h}\right)] \tag{A5}$$

Again h, $p_f - S_1$, and therefore K_i are functions of distance, x. By insisting $K_i = K_c$, we obtain equation (3) in the text. If $h < H$, the appropriate equation is found by setting $S_2 = S_1$.

To obtain, from the above equations, the differential equation for h(x), first make $p_f - S_1$ the subject of (A5), then differentiate with respect to x. Writing $p = p_f - S_1$, this gives:

$$\frac{dp}{dx} = \frac{-dh}{dx}\left[\frac{Kc}{\sqrt{2\pi}\, h^{3/2}} - \frac{2}{\pi}(S_2 - S_1)\frac{H/h}{\sqrt{h^2-H^2}}\right]$$

Equating this to (A4) gives

$$\frac{dh(x)}{dx} = \frac{64}{\pi}\,\frac{q(x)\,\mu(x)}{e(x)w_o^3(x)} \tag{A6}$$

where $e(x) = \frac{K_c}{\sqrt{2\pi h}} - \frac{2}{\pi}(S_2-S_1)\frac{H}{\sqrt{h^2-H^2}}$

and $w_o(x)$ is given by (A3). Again, this equation is for the case $h > H$, but for $h < H$, simply set $S_2 = S_1$. (A6) is the equation to be solved by the Runge-Kutta method to obtain fracture shape, h(x), and therefore pressure profile, p(x), via equation (A5).

Appendix B

Fracture expansion criterion for asymmetric stresses and vertical gradients in stress and fluid pressure

Let us assume the conditions are such that because $S_3 > S_2$ the fracture expands farther up than down. The situation is illustrated in Figure 15.

It is convenient to work in a new frame of reference (we still use the coordinate y), which has as origin the center of the vertical fracture section. The half-length of the 2D crack is then $\ell = (b + c)/2$, where both b and c are positive.

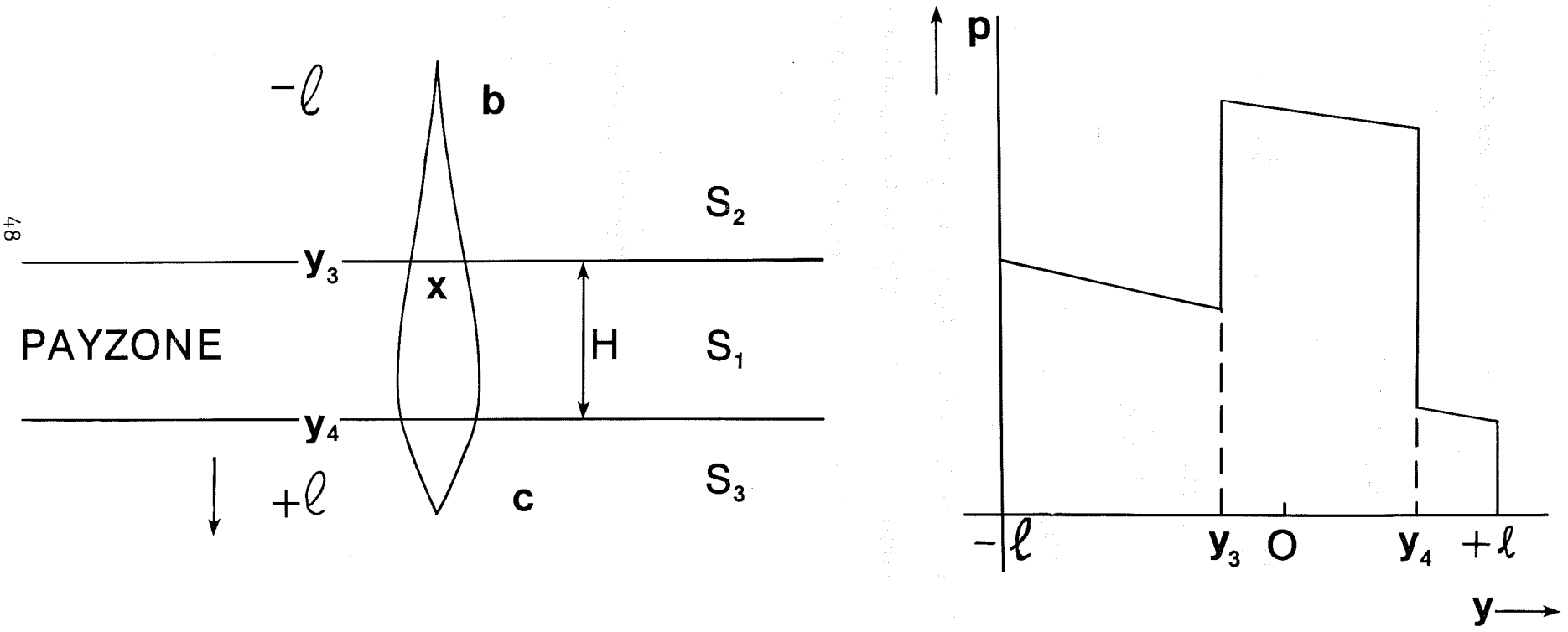

Figure 15. Vertical section of fracture when bounding stresses are asymmetric, and corresponding variation of net pressure.

The net pressure is defined by

$$p(y) = \begin{cases} p_2 - p_{02}\, y & -\ell < y < y_3 \\ p_1 - p_{01}\, y & y_3 < y < y_4 \\ p_3 - p_{03}\, y & y_4 < y < \ell \end{cases} \tag{B1}$$

where y_3, y_4 can be expressed in terms of b, c, and H. p_{01}, p_{02}, p_{03} come from the vertical gradients (assumed linear) of minimum in-situ stress and fluid pressure. p_1, p_2, p_3 can be expressed in terms of p(x), the unknown pressure at the center of the payzone, and p_{01}, p_{02}, p_{03}, $S_2 - S_1$, and $S_3 - S_1$.

To calculate K_{ic}, the stress intensity factor at c, the first equation for K_i in Appendix A is adapted as follows:

$$\sqrt{\pi\ell}\, K_{ic} = \int_{-\ell}^{y_3} + \int_{y_3}^{y_4} + \int_{y_4}^{\ell} p(y) \left(\frac{\ell+y}{\ell-y}\right)^{\frac{1}{2}} dy \tag{B2}$$

with p (y) given by (B1). Actually, (B2) applies to the case b and c both > H/2, and for b or c < H/2 it needs to be modified.

K_{ib}, the stress intensity factor at b, is found in the same way, using the same formula as for K_{ic}, except that the y coordinate system is reversed, with $+\ell$ at the b tip and $-\ell$ at the c tip.

Appendix C

Width equation for asymmetric stresses

Following England and Green[16], Daneshy[19] gives the width as

$$w(y) = -\frac{16(1-\nu^2)}{E} \int_{|y|}^{\ell} \frac{F(t)+yG(t)}{\sqrt{t^2-y^2}} \cdot dt \qquad \text{(C1)}$$

$$\text{where } F(t) = \frac{-t}{2\pi} \int_{o}^{t} \frac{f(y)\ dy}{\sqrt{t^2-y^2}}$$

$$\text{and } G(t) = \frac{-1}{2\pi t} \int_{o}^{t} \frac{yg(y)\ dy}{\sqrt{t^2-y^2}}$$

Here f(y) and g(y) are even and odd functions which, added together, give p(y). Given p(y), as in (B1) for example, we can compute f(y) and g(y), and then by numerical integration, find w(y).

The procedure has to be modified a little if the center of the fracture moves out of the payzone -- it makes a difference to f(y) and g(y). When the fracture is not too asymmetric with respect to the payzone (i.e., when S_2 and S_3 are not too different and when the gradients in S and p_f are not too large), an approximation to the maximum width, w_o, can be found by assuming it occurs at the center of the crack, at y = 0. In this case, (C1) becomes

$$w(0) = \frac{-16(1-\nu^2)}{E} \int_{o}^{\ell} \frac{F(t)}{t}\, dt$$

$$\text{with } F(t) = \frac{-t}{2\pi} \int_{o}^{t} \frac{f(y)\ dy}{\sqrt{t^2-y^2}}$$

and an analytic formulation for $w_o = w(0)$ becomes possible. This greatly simplifies the computation of h(x) and p(x), and we utilize this approximation in modeling the stimulation of the Cozzette sand described in the text.

Appendix D

How to run program FL5

1. Program description

FL5 is a fracture simulator in which fracture height is self-determined. It is an extension of program FL2, described previously,[7] in that the flow rate variation, q(x), is internally consistent, and leakoff has been incorporated. The program solves simultaneously the width equation, w(p), the pressure drop equation, p(w), and the fracture expansion criterion, $K_i = K_c$. By solving these equations at each point x along the payzone axis, a fracture shape h(x), and pressure profile, p(x), are obtained for a given fracture half-length, a. The boundary condition we assume is that the fracture height near the tip of the payzone axis (x = a) is a little greater than the payzone height.

However, the flow rate assumed in this computation must be consistent with the equation of continuity, and the main program contains an iteration to ensure this. Furthermore, another iteration, involving the rate of fracture length expansion, is required to satisfy the continuity equation, and this is also performed in the main program. The result is a length expansion rate, a(t), height growth rate, h(t), and bottomhole pressure increase p(t) for the case of a blanket sand bounded by zones of higher (but equal) minimum in-situ stress.

2. Program Listing

Main Program	Subroutines	Functions
FL5	VLTQ	FUN
	QTEST	ACOS
	WIDTH	ASIN
	RK2	RNUMINT
		FUNCTN

3. Operating Mode

Automated

4. Language

Fortran IV

5. Program developed on

Data General Eclipse

6. Total CP time

5 minutes

7. Input Parameters

```
2_SELECTS CALCULATIONS, ONE=TIME, TWO=TIME AND Q, THREE=NEITHER

1_IWRITE    FLAG USED TO SELECT OUTPUT
200000000.  KCB(CGS) FRACTURE TOUGHNESS
100.0       HZ (FT) PAYZONE HEIGHT
10.0        QIN(BPM) INPUT FLOW RATE
300.0       RMU(CP) VISCOSITY

3000000.   EMOD(PSI) YOUNG'S MODULUS
0.1        RNU POISSON'S RATIO

550.0      S2MS1(PSI) STRESS CONTRAST - MUST BE SYMMETRICAL

400.0      A1(FT)     THESE ARE FRACTURE HALF LENGTHS WHICH WILL
1000.0     A2(FT)     CONSTITUTE L(T)
3000.0     A4(FT)

.0025      LEAKC(CGS) LEAKOFF COEFFICIENT
10.0       DFT(%) PERCENT DIFFERENCE IN L(T) FIRST ESTIMATE

7_IRUNZ    IRUNZ = 7 → ONE ITERATION WITH TWO LINE SEGMENTS

1.0        Q1 QX AT XA = ZERO Q1 Q2 Q3 ARE USED TO CALC INPUT FLOW RATE
0.2        Q2 QX AT XA = NINE TENTHS
0.1        Q3 QX AT XA = ONE

1_SELECTS OPTION TO RECOMPUTE AND LIST ALL KI'S FOR CHECKING PURPOSES
```

```
20.0        PERCENTAGE FOR QX CONVERGENCE
440-NDIV # OF DIVISIONS TO SPLIT FRACTURE INTO(LENGTHWISE)
0.999       XAZ XA POSITION AT WHICH NUMERICAL INTEGRATION BEGINS
999.0       YZP(PSI) PRESSURE AT FRACTURE TIP (DUMMY VALUE_NOT USED IN CALCN)
11_N # OF SEGMENTS FRACTURE WING IS SPLIT INTO(LENGTHWISE)

1_NRES
5_MFAC MULT FACTOR USED TO MAKE CALCN AT THE FRACTURE TIP MORE ACCURATE
20_NODIV # OF STEPS FOR NUMERICAL INTEGRATION
5_NUMWID # OF WIDTH CALCULATIONS IN EACH VERTICAL FRACTURE SECTION

1.023       HSTART/HZ STARTING HEIGHT OF FRAC ABOVE CENTER OF PAYZONE AT FRAC TIP
```

8. Effect of step size on Runge-Kutta calculation

If the resolution is not fine enough (i.e., xa steps not small enough) the numerical integration may blow up near xa = 1, i.e., at the start of the integration. When this happens, the T1 value will be too high ($\gtrsim$ 100) and the PXA( ) pressures along the payzone will all be similar and erroneous. To keep T1 down, increase the resolution in the first segment by increasing MFAC.

The final check on the results is to double NDIV, which doubles the step resolution along the entire xa axis. If the results for b etc. do not change, the Runge-Kutta integration is reliable.

9. Listings of program

See end of report.

```
      COMPILER NOSTACK
      COMPILER DOUBLE PRECISION
C     NOSTACK CAUSES ALL NON-COMMON VARIABLES TO BE PUT IN MEMORY
C     RATHER THAN VARIABLE STACK
C*****************************************************************
C*****************************************************************
C     FL5        - THIS PROGRAM SOLVES W(P) AND P(W) EQUATIONS
C                  FOR 1D FLUID FLOW AND ITERATES UNTIL KI = KCB
C                  ALONG PERIMETER. IT ALSO CALCULATES W(Y) PROPERLY,
C                  BUT ONLY CAN BE USED FOR SYMMETRIC STRESSES. LEAKOFF
C                  IS INCLUDED AND IS AUTOMATIZED.
C                  IT CALLS ASIN,ACOS,RK2,FUN,VLTQ3,RNUMINT,
C                  QTEST,FUNCTN,AND WIDTH SUBPROGRAMS,AND FORT.LB LIBRARY
C                  SO THESE NEED TO BE LINKED.
C*****************************************************************
C*****************************************************************
C
      DIMENSION PXA(22),RXA(22),PXAP(22),VX(2,22),TIME(2),W(51),AREAS(22)
      DIMENSION          KICHOICE(22,2),DIFCHOICE(22),HP(22),QX(22)
      DIMENSION SAVS(4,11),SAVC(4,11),TA(4),RTA(4),SHP1(11),SPXA1(11),
     C SHP2(11),SPXA2(11),SVX1(1,11),SVX2(1,11)
      INTEGER WFLAG,FFLAG,KIFLAG
      REAL   KSQ,KPSQ,KIA,KIB,KI1,KI2,KICHOICE,KDIF,M,L,KCA,KCB
      COMMON/FNCTN/ F1,F2,IF1
      COMMON/ABLOC/B,C2,HZ,C4,CONST,E,XAC,TOP,NFLOW,DELTA,HNEW,HOLD,

     C       XAOLD,XAINC,HP
      COMMON /SUBVTQ/ IFRAC,VX,TIME,AFAC,ITQ,Q,A,PI,S2MS1,WFLAG,PXA,N
     C                ,EMOD,RNU,NODIV
      COMMON /SUBWIDTH/ W,AREAS,NUMWID,I,L,H
      COMMON /CBLOC/ CEPT(22),SLOPE(22)
      COMMON/KVAL/KCB,HSTART,ISEG
      COMMON/QVAL/QX,INQX
      COMMON/SUBLEAK/VTOT1,TIME1,LEAKC,TSLOPE,TCEPT,T1CHECK,ISLOPE,
     C AF1,IRUN,SVX1,SVX2,S1AF1,S1VTOT1,S2AF1,S2VTOT1
      REAL LEAKC
      COMMON/TC/TSL1,TCE1,TSL2,TCE2
      REAL INQX(22)
      CALL OPEN(1,"@DATA",1,IER,128)
      CALL OPEN(2,"@LIST",2,IER,128)
      WRITE(2,6661)
 6661 FORMAT(" FLAMLEAK5 OUTPUT"//" INPUT VALUES: "/)
      PI = 3.14159
      TOP=2./PI
      NUMEQ = 3
C
C     INPUT VALUES:
C
      READ(1)ITQ
      READ(1) IWRITE,    KCB,HZ,QIN,RMU
      WRITE(2,602) ITQ,IWRITE,    KCB,HZ,QIN,RMU
 602  FORMAT(" ITQ= ",I3," IWRITE= ",I3,"   KCB= ", E11.3,
     C " HZ= ",F7.1," QIN= ",F7.1," MU= ",F7.1)
      READ(1) EMOD,RNU
      WRITE(2,762) EMOD,RNU
 762  FORMAT("  YOUNG'S MODULUS= ",E12.3," POISS.RATIO= ",F10.2)
      READ(1) S2MS1
      WRITE(2,604) S2MS1
 604  FORMAT(" S2-S1= ",F10.1)
      READ(1) A1,A2,A4
      WRITE(2,642) A1,A2,A4
 642  FORMAT(/" A1= ",F10.0," A2= ",F10.0," A4= ",F10.0)
      READ(1) LEAKC,DFT
      WRITE(2,644) LEAKC,DFT
 644  FORMAT(" LEAKC= ",F10.5," DFT= ",F10.0)
      READ(1)IRUNZ
      WRITE(2,650)IRUNZ
 650  FORMAT("  IRUNZ= ",I3)
      READ(1)Q1,Q2,Q3
      XA1=0.
      XA2=.9
      XA3=1.0
```

```
C       INITIALIZE SLOPE,CEPT VALUES
        SLOP1 = (Q1 - Q2)/(XA2 - XA1)
        CEP1 = Q1 + SLOP1*XA1
        SLOP2 = (Q2 - Q3)/(XA3 -XA2)
        CEP2 = Q2 + SLOP2*XA2
        DO 561 J=1,2
        SLOPE(J) = SLOP2
 561    CEPT(J) = CEP2
        DO 562 J=3,11
        SLOPE(J) = SLOP1
 562    CEPT(J) = CEP1
C       SLOPE(1),CEPT(1) CORRESPOND TO THE SEGMENT AT X=A
        WRITE(2,460) Q1,Q2,Q3,(SLOPE(J),J=1,11), (CEPT(J),J=1,11)
 460    FORMAT(" Q1=",F6.3,"Q2=",F6.3,"Q3=",F6.3/
     C  " SLOPE = ",11(F6.3,1X)/" CEPT = ",11(F6.3,1X))

C       ??????????????????????????
C       THE ABOVE IS NOT PROGRAMMED FOR N=21, ONLY N=11

        READ(1)  ICOMP
        WRITE(2,570)ICOMP
 570    FORMAT(" ICOMP= ",I3," IF ICOMP=1, THEN RECOMPUTE,LIST ALL KI'S
     C  IN RANGE 0-1.")
        READ(1)QPER
        WRITE(2,572)QPER
 572    FORMAT(" Q(X) WILL CONVERGE TO ",F10.0," PERCENT ")


C       CONVERT UNITS
        S2MS1 = 68940. * S2MS1
        HZ= 30.48 * HZ
        RP=HZ/2.
        EMOD=EMOD*68940.
        G=EMOD/(2.*(1.+RNU))
        Q=QIN*2640.
        RMU=RMU*.01
        A=L*30.48
        C1=(1.-RNU) / G
        C4=-64.*Q*RMU /  PI
        C4=C4/C1**3
        C2=S2MS1*2./PI
        IFRAC = 1
        ITERQ = 0
        ICYCLE = 0
C
 15     CONTINUE
        IYZ=0
        READ(1) NDIV,XAZ,YZP,N
        WRITE(2,613) NDIV,XAZ,YZP,N
 613    FORMAT(  " NDIV= ",I5," XAZ= ",F10.6," YZP= ",F10.3," N= ",I3)
199     CONTINUE
C       BEGIN NEW ITERATION
C
 9      ICYCLE=ICYCLE+1
        READ(1) NRES,MFAC
        WRITE(2,592) NRES,MFAC
 592    FORMAT(" NRES = ",I4,"    MFAC = ",I4)
        READ(1) NODIV
        WRITE(2,61)NODIV
 61     FORMAT(" NO. OF STEPS FOR NUM. INTEGRN.= ",I4," (USUALLY 40)")
        READ(1) NUMWID
        WRITE(2,63)NUMWID
 63     FORMAT(" NO. OF WIDTH CALCNS. IN EACH VERT. SECTION= ",I4,
     C  " (USUALLY 10)")
        READ(1) HSTART
        WRITE(2,6232) HSTART
6232    FORMAT("  HSTART/HZ =  ",F10.4)
```

```
C         ------------------------------------------------------------------
C         CONTROL PROGRAM TO AUTOMATIZE LEAKOFF
 250      CONTINUE
C         CALCULATE L(T) FOR A=A1 AND C=0
          WRITE(2,101)
 101      FORMAT(/' ------------------------------------------------------------"
     C   '-----------------------------------------'/
     C   ' CALC. ONE L(T) VALUE FOR A=A1 AND C=0.'/
     C   '------------------------------------------------------------------"
     C   '---------------------------------------')
          ISLOPE=1
          IRUN=1
          A=A1*30.48
          IFRAC=1
          ITQ=1
C         SET Q(X) TO Q(0) (1-X/A)
          DO 2501 J=1,N
          SLOPE(J)= 1.
 2501     CEPT(J)= 1.
          GO TO 350
C         SAVE IFRAC=1 RESULTS FOR IRUN=3 CALCNS
 251      SAVT1 = TIME1
          S1AF1 = AF1
          S1VTOT1 = VTOT1
          DO 2511 J=1,N
          SVX1(1,J) = VX(1,J)
          SHP1(J)=HP(J)
 2511     SPXA1(J)=PXA(J)
C         ------------------------------------------------------------------
C         CALCULATE L(T) FOR A=A4 AND C=0
          WRITE(2,102)
 102      FORMAT(/' ------------------------------------------------------------"
     C   '-----------------------------------------'/
     C   ' CALC. ONE L(T) VALUE FOR A=A4 AND C=0.'/
     C   '------------------------------------------------------------------"
     C   '---------------------------------------')
          IRUN=2
          A=A4*30.48
          IFRAC=1
          ITQ=1
C         Q(X) SAME AS IRUN=1,SAME SLOPE,CEPT VALUES)
          GO TO 350
C         SAVE IFRAC=1 RESULTS FOR IRUN=3 CALCNS
 252      SAVT2 = TIME1
          S2AF1 = AF1
          S2VTOT1 = VTOT1
          DO 2522 J=1,N
          SVX2(1,J) = VX(1,J)
          SHP2(J)=HP(J)
2522      SPXA2(J)=PXA(J)
C         ------------------------------------------------------------------
C         NOW CALC. 2 END POINTS OF 1ST APPROX OF L(T) WITH C <> 0
C         (1) LOWER END POINT IS EXTRAPOLATION OF L(T) FROM L=A1,A4
C         TO T=2 MIN (BASED ON BERKELEY PLOT)
          WRITE(2,103)
 103      FORMAT(/' ------------------------------------------------------------"
     C   '-----------------------------------------'/
     C   ' NOW USE THESE RESULTS TO CALC. 1ST APPROX'N FOR L(T) [1 SEGMENT].'/
     C   '------------------------------------------------------------------"
     C   '---------------------------------------')
          TL=120.
          ALLOG = DLOG10(A1) - (DLOG10(A4) - DLOG10(A1))*
     C   (DLOG10(SAVT1) - DLOG10(120.))/(DLOG10(SAVT2) - DLOG10(SAVT1))
C         (2) UPPER END POINT COMES FROM NORDGREN'S SOLUTION FOR L(T)
C         FOR T, C=INFINITY (WE TAKE T=10**6 SEC)
          TU = 1.D6
          AU = Q*DSQRT(TU)/(PI*LEAKC*HZ)
          AU = AU/30.48
C         NOW CALC PARAMS FOR LEAKOFF CALCN
          TSLOPE = (DLOG10(AU) - ALLOG)/(DLOG10(TU) - DLOG10(TL))
C         TSLOPE = SLOPE OF LOG L(FT) VS LOG T(SEC) PLOT
          TCEPT = ALLOG  - TSLOPE * DLOG10(TL)
C         TCEPT = INTERCEPT OF PLOT AT LOG T=0.
          WRITE(2,2521) A1,SAVT1,A4,SAVT2,ALLOG,AU,TSLOPE,TCEPT
2521      FORMAT(' A1,SAVT1,A4,SAVT2,ALLOG,AU,TSLOPE,TCEPT = '/1X,8E11.4)
```

```
C       ------------------------------------------------------------------
C       NOW USE THIS 1ST ESTIMATE OF TSLOPE & TCEPT PLUS H,P RESULTS
C       FOR A=A1 (WHEN C=0) TO ADJUST L(T) AT A=A1
C       WE ASSUME Q(X)=Q(0)(1-X/A) FOR NOW. CAN'T ALLOW Q(X) TO
C       CONVERGE COZ H,P FOR IFRAC=1 ARE THOSE DERIVED FROM
C       Q(X)=Q(0)(1-X/A)
        WRITE(2,104)
 104    FORMAT(/" ------------------------------------------------------------"
     C "-------------------------------"/
     C  " NOW USE 1ST APPROX'N FOR L(T) AND A=A1 RESULTS TO ADJUST L(T)
     C  VALUE AT A=A1."/
     C  "------------------------------------------------------------------"
     C  "----------------------")
        ITRUN3=0
        TA4LOG = DLOG10(TU)-(DLOG10(AU)-DLOG10(A4))/TSLOPE
        TA(4)= 10.**TA4LOG
        TA1LOG = DLOG10(TU) - (DLOG10(AU) - DLOG10(A1))/TSLOPE
        TA(1)= 10.**TA1LOG
2525    A=A1*30.48
        IRUN = 3
        ITQ = 2
        IFRAC = 1
C       RESET Q(X) TO Q(0)*(1-X/A)
        DO 2529 J=1,N
        SLOPE(J)= 1.
2529    CEPT(J)= 1.
        DO 2523 J=1,N
        HP(J) = SHP1(J)
2523    PXA(J) = SPXA1(J)
        GO TO 729
 253    RTA(1)= (1.*TA(1) + 3.*T1CHECK)/4.
        DIFT1 = DABS(TA(1)- T1CHECK) / TA(1) *100.
        WRITE(2,2531)A1,TA(1),T1CHECK,DIFT1,RTA(1)
2531    FORMAT(/" A= ",E11.3," INPUT T= ",E11.3," OUTPUT T= ",E11.3,
     C  " DIFT1= ",E11.3," ADJUSTED T ESTIMATE = ",E11.3)
C       SAVE ADJUSTED CEPT, SLOPE VALUES
        CALL QTEST(N,QPER,ITERQ)
        DO 2528 J=1,N
        SAVS(1,J)=SLOPE(J)
2528    SAVC(1,J)=CEPT(J)
C       ------------------------------------------------------------------
C       REPEAT TO ADJUST L(T) AT A=A4
        WRITE(2,105)
 105    FORMAT(/" ------------------------------------------------------------"
     C "-------------------------------"/
     C  " NOW USE 1ST APPROX'N FOR L(T) AND A=A4 RESULTS TO ADJUST L(T)
     C  VALUE AT A=A4."/
     C  "------------------------------------------------------------------"
     C  "----------------------")
        A = A4*30.48
        IRUN = 4
        ITQ = 2
        IFRAC = 1
C       RESET Q(X) TO Q(0)*(1-X/A)
        DO 2539 J=1,N
        SLOPE(J)=1.
2539    CEPT(J)=1.
        DO 2533 J=1,N
        HP(J) = SHP2(J)
2533    PXA(J) = SPXA2(J)
        GO TO 729
 254    RTA(4)= (1.*TA(4)+ 3.*T1CHECK)/4
        DIFT4 = DABS(TA(4) - T1CHECK) / TA(4) *100.
        WRITE(2,2541) A4,TA(4),T1CHECK,DIFT4,RTA(4)
2541    FORMAT(/" A= ",E11.3," INPUT T= ",E11.3," OUTPUT T= ",E11.3,
     C  " DIFT4= ",E11.3," ADJUSTED T ESTIMATE = ",E11.3)
C       SAVE ADJUSTED CEPT,SLOPE VALUES
        CALL QTEST(N,QPER,ITERQ)
        DO 2537 J=1,N
        SAVS(3,J)=SLOPE(J)
2537    SAVC(3,J)=CEPT(J)
C       ------------------------------------------------------------------
C       NOW CALC. ADJUSTED TSLOPE,TCEPT
        WRITE(2,106)
 106    FORMAT(/" ------------------------------------------------------------"
     C "-------------------------------"/
     C  " NOW ADJUST L(T) [1 SEGMENT].."/
     C  "------------------------------------------------------------------"
     C  "----------------------")
```

```
      TSLOPE = (DLOG10(A4)-DLOG10(A1))/(DLOG10(RTA(4))-DLOG10(RTA(1)))
      TCEPT = DLOG10(A1) - TSLOPE * DLOG10(RTA(1))
      WRITE(2,2542) TSLOPE,TCEPT
2542  FORMAT(/" ADJUSTED TSLOPE,TCEPT = ",2E11.3)
C     NOW REPEAT TSLOPE,TCEPT ADJUSTMENT TIL TIME DIFFCES < DFT
      TA(1) = RTA(1)
      TA(4) = RTA(4)
      ITRUN3 = ITRUN3 + 1
      IF(ITRUN3.GT.4) GO TO 2526
      IF(DIFT1.LT.DFT.AND.DIFT4.LT.DFT) GO TO 2526
      GO TO 2525
2526  WRITE(2,2527) DIFT1,DIFT4,DFT,ITRUN3
2527  FORMAT(/" ITERATION IN IRUN=3 STOPPED BECAUSE TIME DIFFERENCES
     C DIFT1= ",F10.1," OR DIFT2= ",F10.1/
     C " ARE BOTH LESS THAN ",F10.1," PERCENT, OR ELSE NO. OF ITERATIONS "
     C ,I3," EXCEEDS 4 ")
C     ------------------------------------------------------------------
C     CALC. T1CHECK FOR A1,A2,A3 AND ADJUSTED TA1,TA2,TA3(WITH LEAKOFF
C     AND ONE Q(X) ITERATION.) ASSUMES L(T)=ONE LINE SEGMENT ONLY.
      WRITE(2,107)
 107  FORMAT(/" ------------------------------------------------------------"
     C "----------------------------"/
     C " USE THIS ADJUSTED L(T) [1 SEGMENT] TO DO FULL LEAKOFF CALCN "/
     C " FOR A1 THEN A2 THEN A4. FROM THE TIME DISCREPANCY WE COMPUTE"/
     C " AN ADJUSTED L(T) VALUE(=TA)."/
     C "------------------------------------------------------------------"
     C "----------------------")
      TA2LOG =    DLOG10(RTA(4)) - (DLOG10(A4) - DLOG10(A2))/TSLOPE
      TA(2)= 10.** TA2LOG
C     RESET INDEX 4 TO 3 FOR A = A4
      TA(3) = TA(4)
C     SET SAVED SLOPE, CEPT FOR A2 TO AV OF A1,A4
      DO 2558 J=1,N
      SAVS(2,J)=(SAVS(1,J) + SAVS(3,J))/2.
2558  SAVC(2,J)=(SAVC(1,J) + SAVC(3,J))/2.
      DO 2556 K=1,3
      IF(K.EQ.1) A=A1*30.48
      IF(K.EQ.2) A=A2*30.48
      IF(K.EQ.3) A=A4*30.48
      IRUN=5
      ITERQ=0
C     RESET Q(X) TO SAVED VALUES
      DO 2554 J=1,N
      SLOPE(J)=SAVS(K,J)
2554  CEPT(J)=SAVC(K,J)
2553  ITQ=2
      IFRAC=1
      GO TO 350
 255  CALL QTEST(N,QPER,ITERQ)
C     WHEN THIS IS WORKING, MIGHT BUMP ITERATION BELOW UP TO 2
      IF(ITERQ.EQ.1) GO TO 2552
      GO TO 2553
C     SAVE ITERATED Q(X) FOR NEXT TIME
2552  DO 2557 J=1,N
      SAVS(K,J)=SLOPE(J)
2557  SAVC(K,J)=CEPT(J)
      RTA(K)=(1.*TA(K) + 3.*T1CHECK)/4.
      ATP = A/30.48
2556  WRITE(2,2555) ATP,TA(K),T1CHECK,RTA(K)
2555  FORMAT(/" A= ",F10.0," OLD TA= ",F10.1," NEW TA= ",F10.1,
     C " ADJUSTED TA= ",F10.1)
C     ------------------------------------------------------------------
C     NOW CALC ADJUSTED TSLOPE,TCEPT FOR REGIONS TA1->TA2, TA2->TA4
C     ASSUMES L(T) = 2 LINE SEGMENTS
      WRITE(2,108)
 108  FORMAT(/" ------------------------------------------------------------"
     C "----------------------------"/
     C " NOW CALC. ADJUSTED L(T) FOR 2 LINE-SEGMENTS."/
     C "------------------------------------------------------------------"
     C "----------------------")
      TSL1=(DLOG10(A2)-DLOG10(A1))/(DLOG10(RTA(2))-DLOG10(RTA(1)))
      TSL2=(DLOG10(A4)-DLOG10(A2))/(DLOG10(RTA(3))-DLOG10(RTA(2)))
      TCE1=DLOG10(A1) - TSL1 * DLOG10(RTA(1))
      TCE2=DLOG10(A2) - TSL2 * DLOG10(RTA(2))
      WRITE(2,2575) A1,A2,TSL1,TCE1,A2,A4,TSL2,TCE2
2575  FORMAT(/" FROM ",F10.0," TO ",F10.0," TSLOPE= ",F10.3,
     C " TCEPT= ",F10.3/" FROM ",F10.0," TO ",F10.0,
     C " TSLOPE= ",F10.3," TCEPT= ",F10.3)
C     ------------------------------------------------------------------
```

```
      ISLOPE=2
C     CALC T1CHECK FOR A1,A2,A4 WITH LEAKOFF AND ONE Q(X) ITERATION
C      (START WITH SAVED Q(X))
      WRITE(2,109)
 109  FORMAT(/" ------------------------------------------------------------"
     C"-----------------------------"/
     C" NOW DO FULL LEAKOFF CALCN, BASED ON 2 LINE-SEGMENTS OF L(T),"/
     C" FOR A=A1, THEN A2, THEN A4. THIS IS ITERATED TIL IRUN=IRUNZ."/
     C" E.G. IRUNZ=8 GIVES 2(NOTE IT IS TWO!!!) OF THESE ITERATIONS."/
     C"------------------------------------------------------------------"
     C"----------------------")
      IRUN=6
2601  TA(1)=RTA(1)
      TA(2)=RTA(2)
      TA(3)=RTA(3)
      DO 2566 K=1,3
      IF(K.EQ.1) A=A1*30.48
      IF(K.EQ.2) A=A2*30.48
      IF(K.EQ.3) A=A4*30.48
      ITERQ=0
      DO 2564 J=1,N
C     RESET Q(X) TO SAVED Q(X)
      SLOPE(J)=SAVS(K,J)
2564  CEPT(J)=SAVC(K,J)
C     SELECT TSLOPE, TCEPT BELOW & ABOVE JOIN AT A2
      IF(K.EQ.3) GO TO 2568
      TSLOPE=TSL1
      TCEPT=TCE1
      GO TO 2563
2568  TSLOPE=TSL2
      TCEPT=TCE2
2563  ITQ=2
      IFRAC=1
      GO TO 350
 256  CALL QTEST(N,QPER,ITERQ)
C      NO ITERATION ON Q(X) WITH 1 BELOW
      IF(ITERQ.EQ.1) GO TO 2562
      GO TO 2563
C     SAVE ITERATED Q(X) FOR NEXT TIME
2562  DO 2569 J=1,N
      SAVS(K,J)=SLOPE(J)
2569  SAVC(K,J)=CEPT(J)
      RTA(K)=(1.*TA(K) + 3.*T1CHECK)/4.
      ATP= A/30.48
2566  WRITE(2,2565) ATP,TA(K),T1CHECK,RTA(K)
2565  FORMAT(/" A= ",F10.0," OLD TA= ",F10.1," NEW TA= ",F10.1,
     C" ADJUSTED TA= ",F10.1)
C     CALC. ADJUSTED L(T) ..... TWO LINE SEGMENTS
      TSL1=(DLOG10(A2)-DLOG10(A1))/ (DLOG10(RTA(2))-DLOG10(RTA(1)))
      TSL2=(DLOG10(A4)-DLOG10(A2)) /(DLOG10(RTA(3))-DLOG10(RTA(2)))
      TCE1=DLOG10(A1) - TSL1 * DLOG10(RTA(1))
      TCE2=DLOG10(A2) - TSL2 * DLOG10(RTA(2))
      WRITE(2,110)
 110  FORMAT(/" ------------------------------------------------------------"
     C"-----------------------------"/
     C" ADJUSTED L(T) = "/
     C"------------------------------------------------------------------"
     C"----------------------")
      WRITE(2,2575) A1,A2,TSL1,TCE1,A2,A4,TSL2,TCE2
      IRUN=IRUN+1
C     IF WANT ONE MORE ITERATION ON L(T), CHANGE 8 TO 9 BELOW
      IF(IRUN.EQ.IRUNZ) GO TO 2600
      GO TO 2601
 2600 CONTINUE
      STOP
C     ------------------------------------------------------------------------
 350  CONTINUE
C     ------------------------------------------------------------
C     BEGIN NEW FRAC HEIGHT CALCULATION.
 93   IHST=0
      HOLD= HSTART
      HP(1) = HSTART
      AFAC = 1. + 1./(N-1)
      IF(IFRAC.EQ.1)NTEMP=N
      NUMSEG=N-1
```

```
      IF(IFRAC.EQ.2) NTEMP=N+1
      IF(IFRAC.EQ.2) NUMSEG=N
      XAINC=1./FLOAT(NUMSEG)
      STEP=1./FLOAT(NDIV)
C     CONVERT UNITS
      YZ = YZP*68940.

C
C     CALCULATE SOLN OF D.E. ARISING FROM  W(P) AND P(W) EQNS, USING RUNGE-
TTA
C
      KDIV= NDIV/NUMSEG
      ISTART=1
      H2= STEP/2.
      STEP=STEP/FLOAT(MFAC)
      H2=H2/FLOAT(MFAC)
      KDIV=KDIV*MFAC
C     THIS UPS THE NO OF STEPS IN 1ST SEGMENT  BY FACTOR MFAC
C     FOR MORE ACCURATE INTEGRATION NEAR XA=1.
 330  CONTINUE
C     WRITE(2,92)
C92   FORMAT('  IF YOU WANT TO CHANGE HSTART,  HIT 1 ')
C     READ(1) IHST
C     IF(IHST.EQ.1) GO TO 93
      ISEG = 2

      CALL RK2( A,STEP,XAZ,YZ,NDIV,N,PXA,RXA,NRES,MFAC,IFRAC,H2,KDIV,ISEG)
C     IF(IWRITE.EQ.1) WRITE(2,615) C1,C2,C4,STEP
 615  FORMAT(' C1,C2,C4 =  ',3E12.3,'STEP=',E12.3/)

C     CALC. PRESSURE FROM KI=KC
      HH=HP(2)* HZ
      PXA(2)=KCB*DSQRT(TOP/HH) + TOP*S2MS1*ACOS(1./HP(2))
      IF(HP(2).LT.1.) PXA(2)=DSQRT(TOP/HH) * KCB
C     WRITE(2,19) HP(2),PXA(2),RXA(2)
 19   FORMAT('  HP(2)/HZ= ',E12.4,'  PXA(2) = ',E12.4,'  RXA(2) = ',E12.4)
C
C     NOW RESET STEP, KDIV
      STEP=STEP*FLOAT(MFAC)
      H2=H2*FLOAT(MFAC)
      KDIV=KDIV/MFAC
C
 335  DO 336 ISEG=3,NTEMP
      CALL RK2(A,STEP,XAZ,YZ,NDIV,N,PXA,RXA,NRES,MFAC,IFRAC,H2,KDIV,ISEG)
C     WRITE(2,17) ISEG
 17   FORMAT('  ISEG =  ',I4)

C     CALC. PRESSURE FROM KI=KC
      HH=HP(ISEG)* HZ
      PXA(ISEG)=KCB*DSQRT(TOP/HH) + TOP*S2MS1*ACOS(1./HP(ISEG))
      IF(HP(ISEG).LT.1.) PXA(ISEG)=DSQRT(TOP/HH) * KCB
C     WRITE(2,19) HP(ISEG),PXA(ISEG),RXA(ISEG)
      IF(ISEG.EQ.NTEMP) GO TO 334
 336  CONTINUE
 334  CONTINUE
      B=HP(NTEMP) * HZ/2.
C     IF(IWRITE.EQ.1)WRITE(2,620)(PXA(I), I=1,NTEMP)
 620  FORMAT(1X,' PXA(I):',6E12.3/)
      IF(IWRITE.EQ.1)WRITE(2,630)(RXA(I), I=1,NTEMP)
 630  FORMAT(1X,/' RXA(I):',6E12.3/)
      IF(IWRITE.EQ.1) WRITE (2,634)
 634  FORMAT('  ONE OF THE RXA'S MUST BE REAL CLOSE TO 0.    IS IT ????????'
 739  CONTINUE
 727  CONTINUE
 200  CONTINUE

      AFT=A/30.48
      BFT=B/30.48
      DO 1111 I=1,NTEMP
1111  PXAP(I)=PXA(I)/68940.
      WRITE(2,500)AFT,BFT
 500  FORMAT(' A= ',F10.1,'  B= ',F10.1)

      WRITE(2,501)(PXAP(II),II=1,NTEMP)
 501  FORMAT(' PXA: '/(6F10.2/))
```

```
606     CONTINUE
        QB=Q/2640.
        SRMU=RMU/.01
        WRITE(2,627) QB,SRMU,HFT,BFT,AFT
627     FORMAT("  ITERATION SUCCESSFUL ON KI          "/
     C  "   Q= ",F10.1," RMU= ",F10.1,"H= ",F10.1," B= ",F10.1,
     C  "A = ",F10.1)
        HH=HP(1)* HZ
        PXA(1)=KCB*DSQRT(TOP/HH) + TOP*S2MS1*ACOS(1./HP(1))
        IF(HP(1).LT.1.) PXA(1)=KCB*DSQRT(TOP/HH)
        WRITE(2,607)BFT,PXA(1)
607     FORMAT(1X/," B= ",F10.1,"     PXA(1) =  ",F10.1)
        WRITE(2,337)  (HP(I),I=1,NTEMP)
337     FORMAT( "  SHAPE OF FRAC H/HZ FROM XA=1 TO 0 "/(6F12.4/))

C       NOW COMPUTE ALL KI'S FOR CHECKING    PURPOSES.
        IF(ICOMP.NE.1) GO TO 729
        DO 281 J=1,NTEMP
        MCON=1
        IF(HP(J).LE.1.) MCON=0
281     KICHOICE(J,2)= PXA(J) * DSQRT(PI*HP(J)*HZ /2.)
     C  *(1.-2./PI * (S2MS1/PXA(J))*ACOS(MCON/HP(J))  *MCON)
C       WRITE(2,282)  (KICHOICE(J,2),J=1,NTEMP)
282     FORMAT("  K(I) = "/(6E12.4))

729     CONTINUE

C
C       CHECK WHICH CALCULATIONS ARE TO BE DONE - TIME, Q, NEITHER?
C
        IF (ITQ-2) 770,750,9
C       CALCULATE TIME & Q
750     CONTINUE
C
C       DIVIDE FRAC INTO N SEGMENTS AND CALC VOLUME OF EA SEGMENT.
C       CALL THIS FRAC1 THEN ITERATE FOR FRAC2 WHICH IS TO BE ONE
C       SEGMENT LONGER.
C
        IF (IFRAC.EQ.2) GO TO 770
        CALL VLTQ
        ICYCLE = 0
        GO TO 93
C
C       NOW CALC THE VOLUME OF EA OF THE N+1 SEGMENTS FOR FRAC2, FROM
C       SEGMENT VOL'S FOR FRACS 1&2 CALC FLOW RATES DOWN THE FRAC.
C
770     CONTINUE
        CALL VLTQ
        IF (IRUN.EQ.1) GO TO 251
        IF (IRUN.EQ.2) GO TO 252
        IF (IRUN.EQ.3) GO TO 253
        IF (IRUN.EQ.4) GO TO 254
        IF (IRUN.EQ.5) GO TO 255
        IF (IRUN.EQ.6) GO TO 256
        END
```

```
      COMPILER DOUBLE PRECISION
C     ***********************************************************
C     SUBROUTINE VLTQ - CALC VOLUME, LEAKOFF, TIME, AND Q
C     ***********************************************************
      SUBROUTINE VLTQ
      DIMENSION VX(2,22),T(2),QX(22),AREAS(22),W(51),FXA(22),HP(22),

      DIMENSION TAU(21),SVX1(1,11),SVX2(1,11)
      INTEGER FFLAG,WFLAG
      REAL INQX(22),L,LEAKC,LEAKRATE(21),LEAKVOLUME(21)
      COMMON /SUBVTQ/ IFRAC,VX,T,AFAC,ITQ,Q,A,PI,S2MS1,WFLAG,FXA,N
C                    ,EMOD,RNU,NODIV
      COMMON /ABLOC/B, C2,HZ,C4,CONST,E,XAC,TOP,NFLOW,DELTA,HNEW,HOLD,

C        XAOLD,XAINC,HP
      COMMON /SUBWIDTH/ W,AREAS,NUMWID,I,L,H
      COMMON /FNCTN/ FLP,FL,FFLAG
      COMMON /CBLOC/ CEPT(22),SLOPE(22)
      COMMON /SUBLEAK/ VTOT1,TIME1,LEAKC,TSLOPE,TCEPT,T1CHECK,ISLOPE,
C     AF1,IRUN,SVX1,SVX2,S1AF1,S1VTOT1,S2AF1,S2VTOT1
      COMMON/QVAL/ QX,INQX
      COMMON/TC/TSL1,TCE1,TSL2,TCE2

      IF (IFRAC.EQ.2) NUMSEG = N
      IF (IFRAC.EQ.2) GO TO 3
      IF(IRUN.EQ.3.OR.IRUN.EQ.4) GO TO 360
C     IFRAC = 1
      NUMSEG = N-1
C
C     CALCULATE  AREA(FLP)
C
 3    XA = 1.0
      XAINCR=1./NUMSEG
      IF (IFRAC.EQ.1) AFAC = 1. + XAINCR
C
C     LOOP OVER THE VERTICAL SECTIONS CALCULATING AREAS
C     'AREAS(I)' IS THE AREA OF THE I'TH VERTICAL SECTION IN CGS
C
      AREAS(1) = 0.0
      IEND = NUMSEG + 1
      DO 100  I=2,IEND
      H = HP(I) * HZ
      FLP= HZ/H
         L = H/2.
C
C     CALL WIDTH SUBROUTINE TO CALCULATE WIDTH AND AREA FOR THIS SEGMENT
C
         CALL WIDTH
C        WRITE(2,2222) FLP,HZ,H,B,N,I,IFRAC
C2222    FORMAT(/' FLP,HZ,H,B,N,I,IFRAC: ',4E11.4,3I5)
 100  CONTINUE
      WRITE(2,1500)
 1500 FORMAT('  AREAS(X) AS X=A TO 0 :')
      WRITE(2,2000) (AREAS(I),I=1,N)
C
C     NOW, CALCULATE VOLUME BY INTEGRATING THE AREA OVER X
C          V = 2 * INTEGRAL(A(X)DX) FROM X=0 TO X=A
C
      VTOT = 0.0
      DO 300  I = 1, NUMSEG
         II= I + 1
         VX(IFRAC,I) = XAINCR*A * (AREAS(I)+AREAS(II))/2.
 300     VTOT  = VTOT + VX(IFRAC,I)

C SAVE IFRAC = 1 VALUES FOR LATER USE IN LEAKOFF CALCULATIONS
      IF (IFRAC.NE.1) GOTO 350
         AF1 = A/30.48
         VTOT1 = VTOT
      TIME1 = VTOT1/Q
      GOTO 360
 350  VTOT2=VTOT
 360  CONTINUE
C     RESET IFRAC=1 RESULTS WHEN IRUN=3 OR 4
      IF(IRUN.EQ.3.AND.IFRAC.EQ.1) GO TO 531
      GO TO 532
 531  AF1 = S1AF1
```

```
      VTOT1 = S1VTOT1
      DO 533 J=1,N
 533  VX(1,J) = SVX1(1,J)
 532  CONTINUE
      IF(IRUN.EQ.4.AND.IFRAC.EQ.1) GO TO 534
      GO TO 535
 534  AF1 = S2AF1
      VTOT1 = S2VTOT1
      DO 536 J=1,N
 536  VX(1,J) = SVX2(1,J)
 535  CONTINUE
C                                Q IS THE FLOW RATE DOWN A 1-SIDED FRAC &
C                                VTOT IS THE VOLUME OF A 1-SIDED FRAC
      WRITE(2,1900)
 1900 FORMAT(" VOLUME(X) AS X=A TO 0 : (CGS)")
      WRITE(2,2000) (VX(IFRAC,I),I=1,N)
 2000 FORMAT(7E10.4/)
C
C     CHECK IF Q CALC'NS ARE TO BE PERFORMED (ITQ=2)
C
      IF (ITQ.NE.2) GO TO 999
C
C     IF FRAC2 HAS NOT BEEN ITERATED FOR THEN ITERATE FOR FRAC2
C
      IF (IFRAC.EQ.2) GO TO 750
         A = AFAC * A
         IFRAC = IFRAC + 1
         GO TO 999
 750  CONTINUE
C
C     NOW CALC LEAKOFF RATE AND VOLUME FOR EACH SEGMENT
C
C     COMPUTE NEEDED VALUES FROM INPUT VALUES
      TEXPONENT = 1./TSLOPE
      TDIV = 10.**TCEPT

      WRITE(2,4010)TSLOPE,TEXPONENT,TCEPT,TDIV,LEAKC
 4010 FORMAT("  TSLOPE,TEXPONENT = ",2(F10.5,2X),", TCEPT,TDIV = ",
     C 2(F10.4,2X),", LEAKC = ",F10.6)

C CALC TIMES FROM L/T GRAPH
      NM1 = N - 1
      T(1) = (AF1/TDIV)**TEXPONENT
      AF2 = A/30.48
      T(2) = (AF2/TDIV)**TEXPONENT
C     AT JUNCTION POINT A2, WE ASSUME T(2) AS WELL AS T(1)
C     ARE DETERMINED FROM SLOPE, CEPT BELOW JUNCTION
C     (THE LAST TAU VALUE SHOULD BE AT THE JUNCTION).
C     CALC TAU TIMES
      DO 75 I=1,NM1
         HL = AF1 * (FLOAT(I)/(FLOAT(N)-1.) -1./(2.*(FLOAT(N)-1.)))
      IF(ISLOPE.EQ.1) GO TO 120
      GO TO 121
C     JUST ONE LINE SEGMENT IN L(T)
 120  TAU(I) = (HL/10.**TCEPT)**(1./TSLOPE)
      GO TO 122
C     TWO LINE SEGMENTS IN L(T) JOIN AT A2
 121  IF(HL.LE.A2) TAU(I) = (HL/10.**TCE1)**(1./TSL1)
      IF(HL.GT.A2) TAU(I) = (HL/10.**TCE2)**(1./TSL2)
C     THIS NEEDS TO BE EXPANDED IF MORE THAN 2 LINE SEGMENTS IN L(T)
 122  CONTINUE
 75   CONTINUE
C CALC LEAKOFF RATE, LEAKOFF VOLUME
      TOTLEAK = 0.0
      C1 = AF1 * 30.48 /(N-1)
C     C1 IS LENGTH OF EACH SEGMENT
      DO 85 I=1,NM1
         LEAKRATE(I) = C1 * 4.* LEAKC * HZ *
     C   (DSQRT(T(2)-TAU(I))- DSQRT(T(1)-TAU(I)))/(T(2)-T(1))
         LEAKVOLUME(I) = C1 * 4.* LEAKC * HZ * DSQRT(T(1) - TAU(I))
C        CALC TOTAL LEAKOFF
         TOTLEAK = TOTLEAK + LEAKVOLUME(I)
 85   CONTINUE
      WRITE(2,4050)TOTLEAK,VTOT1,VTOT2
 4050 FORMAT(" TOTLEAK= ",E11.4,", VTOT1 = ",E11.4," VTOT2= ",E11.4)
C CALC TOTAL VOLUME
      TOTVOL = VTOT1 + TOTLEAK
```

```
C CALC TIME T1CHECK
         T1CHECK = TOTVOL/Q
         T2CHECK= VTOT2/Q
C        ABOVE IS FOR USE IN CASE C=0
         VBRL= TOTVOL/(2640.*60.)
         VGAL= TOTVOL/ 3785.
         TMIN= T1CHECK/60.
         T1PERCENT = 100. * DABS(T1CHECK - T(1))/T1CHECK
         WRITE(2,2500) T(1),T(2),T1CHECK,TMIN,TOTVOL,VBRL,VGAL
 2500    FORMAT(" T(1)= ",E11.4,", T(2)= ",E11.4," T1CHECK: (SEC,MIN) ",2E11.4,
     C   " DO T(1) AND T1CHECK COMPARE??????????"/
     C   " TOTAL VOLUME:(CGS,BRL,GAL)",3E11.4/)
         WRITE(2,2550)T1PERCENT
 2550    FORMAT(" % DIFF. BETWEEN T1CHECK AND T(1) = ",F14.6)
C        WRITE(2,2600) (LEAKRATE(I),I=1,NM1)
C2600    FORMAT(" LEAKRATE(X) AS X=0 TO A: "/ (6(E11.4,2X)/))
C        WRITE(2,2700) (LEAKVOLUME(I),I=1,NM1)
C2700    FORMAT(" LEAKVOLUME(X) AS X=0 TO A: "/ (6(E11.4,2X)/))
C
C        NOW CALC FLOW RATE DOWN EACH SEGMENT:OUTPUT Q(X) AS X=0 TO A
C
         T2MT1 = T(2)-T(1)
         IF (LEAKC.EQ.0.) T2MT1=T2CHECK-T1CHECK
         QX(1) = Q
         IV1 = N-1
         IV2 = N
         DO 755  I=2,N
            LASTI = I-1
            QX(I) = QX(LASTI) - (VX(2,IV2)-VX(1,IV1))/T2MT1 - LEAKRATE(LASTI)
            IV1 = IV1 - 1
 755        IV2 = IV2 - 1
         DO 756  I=1,N
 756        QX(I) = QX(I)/2640.
         WRITE(2,3000)  (QX(I),I=1,N)
 3000    FORMAT(" OUTPUT Q(X) AS X=0 TO A:"/ (6(E11.4,2X)/))
C REFORM AND WRITE OUT INPUT QX
         INQX(1) = Q/2640.
         QNOT = INQX(1)
         XA = 0.0
         XAINCR = 1./(N-1)
         DO 3100 I=2,N
         XA=XA+XAINCR
            ISE = 13 - I
            INQX(I) = QNOT*(-SLOPE(ISE)*XA + CEPT(ISE))
 3100    CONTINUE
         WRITE(2,3200)(INQX(I),I=1,N)
 3200    FORMAT(" INPUT QX, AS X=0 TO A:"/(6(E11.4,2X)/))
 999     RETURN
         END
```

```
      COMPILER DOUBLE PRECISION
C
C     ************************
C     SUBROUTINE QTEST(N,QPER,ITERQ)
C     ************************
C     THIS SUBROUTINE COMPARES INPUT QX AND OUTPUT QX, AND
C     AVERAGES THEM POINT BY POINT. THE RESULT IS FED BACK
C     AS A NEW INPUT QX AND THE FRACTURE RE-COMPUTED. CYCLE
C     IS REPEATED TIL INPUT AND OUTPUT QX CONVERGES.

      COMMON/QVAL/QX,INQX
      COMMON/CBLOC/CEPT(22),SLOPE(22)
      DIMENSION QX(22)
      REAL INQX(22)
      DO 10 J=1,N
      DIFQ =DABS(QX(J) - INQX(J)) / INQX(J) *100.
      IF(DIFQ.GT.QPER) GO TO 20
   10 CONTINUE
      WRITE(2,50)QPER,ITERQ
   50 FORMAT(/ ' FLOW RATE CONVERGES TO WITHIN ',F10.0,' PERCENT AFTER ',
     C I4,' ITERATIONS ')
C     STOP
   20 DO 30 J=1,N
   30 QX(J) = (3.*QX(J) + 1.*INQX(J))/4.
C     THIS NEW QX IS WEIGHTED AVERAGE OF INPUT AND OUTPUT QX.
      DO 80 J=2,N
      I = 13-J
      SLOPE(J) = (QX(I-1) - QX(I))/ (0.1 * QX(1))
   80 CEPT(J) = QX(I-1)/QX(1)  + SLOPE(J)*(1.0 - (J-1)*.1)
C     DIVIDING BY QX(1) NORMALIZES THE QX'S TO 1 AT THE WELLBORE

      SLOPE(1) = SLOPE(2)
      CEPT(1) = CEPT(2)
C     WRITE(2,100) (SLOPE(J),J=1,N),(CEPT(J),J=1,N)
C100  FORMAT(/' SLOPE = '/11(E9.3,1X)/
C    C ' CEPT = '/11(E9.3,1X))
      ITERQ = ITERQ + 1
C     IF(ITERQ.GT.5) GO TO 60
      GO TO 70
   60 WRITE(2,90) ITERQ
   90 FORMAT(' QX ITERATIONS EXCEED ',I4,' SO PROGRAM STOPPED ')
      STOP
   70 RETURN
      END
```

```
      COMPILER DOUBLE PRECISION
C*****************************************************************
C THIS SUBROUTINE CALCULATES THE NUMERIC INTEGRAL FOR THE WIDTH AND
C FROM THE WIDTH CALCULATES THE AREA
C*****************************************************************
      SUBROUTINE WIDTH
      DIMENSION VX(2,22),T(2),AREAS(22),W(51),PXA(22),HP(22)
      REAL L
      INTEGER FFLAG,WFLAG
      COMMON /SUBVTQ/ IFRAC,VX,T,AFAC,ITQ,Q,A,PI,S2MS1,WFLAG,PXA,N
     C                ,EMOD,RNU,NODIV
      COMMON /ABLOC/B, C2,HZ,C4,CONST,E,XAC,TOP,NFLOW,DELTA,HNEW,HOLD,
     C       XAOLD,XAINC,HP
      COMMON /SUBWIDTH/ W,AREAS,NUMWID,I,L,H
      COMMON /FNCTN/ FLP,FL,FFLAG

C INITIALIZE VARIABLES BEFORE ENTERING W LOOP
      PFMS1= PXA(I)
      WINC = 1./NUMWID
      IENDNUMWID = NUMWID

C CALCULATE W FOR 'NUMWID' INTERVALS OF THE HALF-HEIGHT
      DO 200 K = 1,IENDNUMWID
      FL = WINC*(K-1)
      IF (FL.EQ.0) FL = .001


      WP = PI/2.* (PFMS1) * SQRT(1.-FL**2)

C TEST H, HZ RELATIONSHIP
      IF (H.GT.HZ)GO TO 19
         AREA2=0.0
         GO TO 20

 19   IF (FL.GT.FLP) GO TO 10
C
C        CASE I: BELOW THE EDGE OF THE PAYZONE
C                FL.LT.FLP
C
C                CALCULATE AREA UNDER CURVE(F2) FROM FLP TO 1
C                BY NUMERICAL INTEGRATION
C
C SET FFLAG SO FIRST WIDTH IN INTEGRAL IS CALCULATED.
         FFLAG = 1HX
         AREA2 = RNUMINT( FLP, 1., NODIV)
         GO TO 20
 10   CONTINUE
C
C        CASE II: ABOVE THE EDGE OF THE PAYZONE
C                FL.GE.FLP
C
C                 CALCULATE AREA UNDER CURVE(F2) FROM FL TO 1
C                 BY NUMERICAL INTEGRATION
C
C SET FFLAG SO FIRST WIDTH IN INTEGRAL IS NOT CALCULATED, SINCE ITS AREA
C WOULD BE INFINITE.
         FFLAG = 1HY
         AREA2 = RNUMINT( FL, 1., NODIV)
 20   CONTINUE
      W(K) = (WP - (S2MS1) * AREA2)* 8.*(1-RNU**2)*L
     C   /(PI*EMOD)
 200  CONTINUE
C
C     DEFINE TOP WIDTH TO BE 0.0
C
      KK = NUMWID + 1
      W(KK) = 0.0
C
C     CALCULATE THE TOTAL AREA.
C
      WTOT = 0.0
      DO 250 K=1,NUMWID
         KK = K + 1
         WTOT = WTOT + (W(K) + W(KK))/2.
 250  CONTINUE
      AREAS(I) = 2. * WINC * WTOT * L
```

```
C
C         CHANGE IENDNUMWID SO ALL NUMWID + 1 WIDTHS ARE PRINTED OUT
C
          IENDNUMWID = NUMWID + 1

C         WRITE(2,300)NUMWID
C300      FORMAT(1X," WIDTH, BROKEN DOWN IN ",I4," INCREMENTS")
C         WRITE(2,350)(W(J),J=1,IENDNUMWID)
C350      FORMAT(1X,(6E10.3,1X)/)
C         WRITE(2,400)I,AREAS(I)
C400      FORMAT(1X," I = ",I2," , AREA(I) =  ", F10.4)
          RETURN
          END

)


          COMPILER DOUBLE PRECISION
C
C         ****************************************
C         THIS SUBROUTINE PERFORMS RUNGE-KUTTA SOLUTION OF
C         DIFFERENTIAL EQN ARISING FROM W(P) AND P(W) EQNS.
C         ****************************************
          SUBROUTINE RK2(A,STEP,XAZ,YZ,NDIV,N,PXA,RXA,NRES,MFAC,IFRAC,H2,
     C                                  KDIV,IDUM)
          COMMON/ABLOC/B,C2,HZ,C4,CONST,E,XAC,TOP,NFLOW,DELTA,HNEW,HOLD,
     C    XAOLD,XAINC,HP
          COMMON/KVAL/KCB, HSTART, ISEG
          REAL KCB
          DIMENSION PXA(22),RXA(22),HP(22)
          IF(ISEG.GE.3) GO TO 20
          IPR=0
          RXA(1)=XAZ
          Y=HSTART* HZ
          XA=XAZ
             DO 11 J=1,KDIV
                T1=-STEP*FUN(XA,Y)
                T2=-STEP*FUN(XA-H2,Y+T1/2.)
                T3=-STEP*FUN(XA-H2,Y+T2/2.)
                T4=-STEP*FUN(XA-STEP,Y+T3)
C               ALL STEPS ARE -VE COZ WE ARE INTEGRATING BACKWARDS ALONG
C               THE X AXIS  (DY=-DX * F(X,Y) )
                Y=Y+ A* (T1+2.*T2 + 2.*T3 + T4)/6.
C               THIS *A IS DONE HERE INSTEAD OF IN FUN, COZ ALL FUN( )
C               HAVE TO BE MULTIPLIED BY A.
                IF(IPR.GT. 1) GO TO 31
C                  WRITE(2,55) STEP,XA,T1,T2,T3,T4,Y
 55                FORMAT(" STEP= ",E12.3," XA= ",E12.3," T1,T2,T3,T4=  ",
     C             4E12.3," Y= ",E12.3)
                   IPR=IPR+1
 31             CONTINUE
 11          XA=XA-STEP
             HP(2) = Y/ HZ
             RXA(2) = XA
          RETURN
 20       CONTINUE
          ITEMP=ISEG-1
          XA=RXA(ITEMP)
          Y=HP(ITEMP)* HZ
                DO 1 J=1,KDIV
                   T1=-STEP*FUN(XA,Y)
                   T2=-STEP*FUN(XA-H2,Y+T1/2.)
                   T3=-STEP*FUN(XA-H2,Y+T2/2.)
                   T4=-STEP*FUN(XA-STEP,Y+T3)
C                  ALL STEPS ARE -VE COZ WE ARE INTEGRATING BACKWARDS ALONG
C                  THE X AXIS  (DY=-DX * F(X,Y) )
                   Y=Y+ A* (T1+2.*T2 + 2.*T3 + T4)/6.
C                  THIS *A IS DONE HERE INSTEAD OF IN FUN, COZ ALL FUN( )
C                  HAVE TO BE MULTIPLIED BY A.
                   IF(IPR.GT. 1) GO TO 3
C                     WRITE(2,55) STEP,XA,T1,T2,T3,T4,Y
                      IPR=IPR+1
 3                 CONTINUE
 1               XA=XA-STEP
                 HP(ISEG)= Y/ HZ
2             RXA(ISEG)= XA
          RETURN
          END

)
```

```
      COMPILER DOUBLE PRECISION
C
C     ************************
C     THIS FUNCTION SUBPROGRAM IS CALLED BY RK2 IN RUNGE-KUTTA
C     SOLUTION OF DIFF.EQN. ARISING FROM W(P) AND P(W) EQNS.
C     ************************
      FUNCTION FUN(XA,Y)
      COMMON/KVAL/KCB,HSTART,ISEG
      COMMON/SUBVTQ/IFRAC,VX,TIME,AFAC,ITQ,Q,A,PI,S2MS1,WFLAG,PXA,N,
     C EMOD,RNU,NODIV
      INTEGER WFLAG
      REAL KCB
      COMMON /CBLOC/ CEPT(22),SLOPE(22)
      COMMON/ABLOC/ B,C2,HZ,C4,CONST,E,XAC,TOP,NFLOW,DELTA,HNEW,HOLD,
     C        XAOLD,XAINC,HP
      DIMENSION HP(22),QX(22),VX(2,22),TIME(2),PXA(22)
      IF(IFRAC.EQ.1) M=ISEG
      IF(IFRAC.EQ.2) M=IFIX(12.-XA*10.)
      IF(M.GT.11)  M=11
C     THIS REMOVES PROBLEM WITH SMALL -VE XA
C     THIS IS NOT PROGRAMMED FOR N=21 , ONLY N=11 !!!!!!!!!!!!!!!!!
C     C=1./E-(1./E-TOP) *XA**6
      C = 1.
C     THIS IS APPROXIMATION TO VARIABLE C(X).
      IF(Y.LT.HZ) GO TO 10
C     BELOW IS CASE WHEN H > HZ
C     WE ASSUME FLOW THRU ENTIRE VERT. SECTION (ELLIPSE).
C     DP/DX PROP.  64/(PI*H)
      FP =HZ/Y
      HS1=DSQRT(1. - FP*FP)
      F1A=KCB/DSQRT(2.*PI*Y) - TOP*S2MS1*FP/HS1
      F1B=KCB*DSQRT(TOP*Y) + TOP*S2MS1*HZ*DLOG((1.+HS1)/FP)
      F1=F1A*F1B**3
C     ASSUME CLASSICAL FLUID FLOW ACROSS ENTIRE(ELLIPTICAL)
C            VERTICAL SECTION
      F2 = -C4*(1.-XA)*(CEPT( M)   - SLOPE(M)   *XA)
      GO TO 20
C     BELOW IS CASE WHEN H < HZ.
 10   F1=TOP/PI * KCB**4 * Y
      F2 = -C4*(1.-XA)*(CEPT(M)    - SLOPE(M)   *XA)
 20   CONTINUE
C     THE (1.-XA)**(1+DELTA)  TERM IS X VARIATION FOR BOTH RMU AND Q.
      FUN= F2/F1
C     WRITE(2,100)XA,Y,HZ,KCB,S2MS1,F1,ISEG,CEPT(ISEG),SLOPE(ISEG),
C    C F2,FUN,C4
100   FORMAT(' XA,Y,HZ,KCB,S2MS1,F1,ISEG,CEPT,SLOPE,F2,FUN,C4= '/
     C 1X,6E13.4 ,I3,/1X,5E13.4 )
C     THIS FUN HAS TO BE MULTIPLIED BY A - SEE Q22 - BUT WE
C     DO IT IN RK2 INSTEAD - IT'S EASIER.
      RETURN
      END
```

```
      COMPILER DOUBLE PRECISION
      FUNCTION ACOS( XX )
C    THIS IS USED TO COMPUTE ARCCOS FROM THE DATA GIVEN
C    IF XX IS POSITIVE, RETURNS 0-90
C    IF XX IS NEGATIVE, RETURNS 90-180
      YY=SQRT(1.-XX**2)
      ACOS=ATAN2(YY,XX)
      RETURN
      END
```

```
      COMPILER DOUBLE PRECISION
      FUNCTION ASIN(YY)
C    THIS IS USED TO COMPUTE ARCSIN FROM THE DATA GIVEN
C    IF YY IS POSITIVE, RETURNS 0-90
C    IF YY IS NEGATIVE, RETURNS 270-360
      XX=SQRT(1.-YY**2)
      ASIN=ATAN2(YY,XX)
      RETURN
      END
```

```
        COMPILER DOUBLE PRECISION
        FUNCTION RNUMINT(A,B,NODIV)
C*****************************************************************
C   PERFORM THE NUMERICAL INTEGRATION OF WIDTH EQN USING THE
C   TRAPEZOIDAL METHOD TO INTEGRATE OVER F2 FROM A TO B
C*****************************************************************
C
C   PERFORM NUMERICAL INTEGRATION
C
      INTEGER FFLAG
      COMMON /FNCTN/ FLP,FL,FFLAG

      AREA = 0.0
      WIDTH = (B-A) / NODIV

      JJ = 1
      IF (FFLAG.EQ.1HY) JJ=2
      DO 30 J = JJ,NODIV
         XL = A + (J-1) * WIDTH
         XR = A +   J   * WIDTH
         SMALLA = (WIDTH/2.) * (   FUNCTN(XL) +  FUNCTN(XR)   )
 30      AREA = AREA + SMALLA
      RNUMINT = AREA
      RETURN
      END

)



        COMPILER DOUBLE PRECISION
        FUNCTION  FUNCTN( FLVAR )
C*****************************************************************
C DFUNCTN, RNUMINT INTEGRATES OVER THIS FUNCTION
C*****************************************************************
        INTEGER FFLAG
        COMMON /FNCTN/ FLP,FL,FFLAG

C THIS FUNCTION COMES FROM PAGE 24 B IN NOTES

C DEBUG
      IF(FLVAR.LE.FL)WRITE(2,100)FLVAR,FL
 100  FORMAT(/1X," FLVAR.LE.FL , FLVAR = ",E10.3," FL = ",E10.3)

        FUNCTN = FLVAR/SQRT(FLVAR**2 - FL**2) * ACOS(FLP/FLVAR)
        RETURN
        END

)
```

SAMPLE OUTPUT

```
FLAMLEAK5 OUTPUT
INPUT VALUES:

ITQ=    2 IWRITE=    1    KCB=    0.200D  9 HZ=    100.0 QIN=     10.0 MU=    300.0
 YOUNG'S MODULUS=     0.300D  7 POISS.RATIO=        0.10
S2-S1=       550.0

A1=        400. A2=        1000. A4=        3000.
LEAKC=     0.00250 DFT=          10.
 IRUNZ=    8
Q1= 1.000Q2= 0.200Q3= 0.100
SLOPE =  1.000  1.000  0.889  0.889  0.889  0.889  0.889  0.889  0.889  0.889  0
.889
CEPT =  1.100  1.100  1.000  1.000  1.000  1.000  1.000  1.000  1.000  1.000  1.
000
ICOMP=    1 IF ICOMP=1, THEN RECOMPUTE,LIST ALL KI'S  IN RANGE 0-1.
Q(X) WILL CONVERGE TO          20. PERCENT
NDIV=    440 XAZ=    0.999000 YZP=     999.000 N=  11
NRES =     1    MFAC =     5
NO. OF STEPS FOR NUM. INTEGRN.=    20 (USUALLY 40)
NO. OF WIDTH CALCNS. IN EACH VERT. SECTION=     5 (USUALLY 10)
 HSTART/HZ =        1.0230
-----------------------------------------------------------------------------
CALC. ONE L(T) VALUE FOR A=A1 AND C=0.
-----------------------------------------------------------------------------

RXA(I):    0.999D  0    0.899D  0    0.799D  0    0.699D  0    0.599D  0    0.499D  0

RXA(I):    0.399D  0    0.299D  0    0.199D  0    0.990D -1   -0.100D -2
 ONE OF THE RXA'S MUST BE REAL CLOSE TO 0.     IS IT ????????
A=       400.0  B=         71.0
PXA:
     0.00     118.15     131.14     153.76     179.68     205.46

   229.93     252.76     273.92     293.47     311.54
 ITERATION SUCCESSFUL ON KI
 Q=        10.0 RMU=       300.0H=          0.0 B=        71.0A =       400.0

B=        71.0    PXA(1) =    7986045.1
 SHAPE OF FRAC H/HZ FROM XA=1 TO 0
     1.0230       1.0245       1.0339       1.0544       1.0849       1.1238

     1.1701       1.2231       1.2825       1.3481       1.4197
 AREAS(X) AS X=A TO 0 :

.0000D  00.5686D  30.6382D  30.7659D  30.9244D  30.1098D  40.1279D  4

.1460D  40.1648D  40.1858D  40.2083D  4
VOLUME(X) AS X=A TO 0 : (CGS)

.3466D  60.7356D  60.8559D  60.1030D  70.1233D  70.1449D  70.1670D  7

.1895D  70.2137D  70.2402D  70.0000D  0
-----------------------------------------------------------------------------
CALC. ONE L(T) VALUE FOR A=A4 AND C=0.
-----------------------------------------------------------------------------

RXA(I):    0.999D  0    0.899D  0    0.799D  0    0.699D  0    0.599D  0    0.499D  0

RXA(I):    0.399D  0    0.299D  0    0.199D  0    0.990D -1   -0.100D -2
 ONE OF THE RXA'S MUST BE REAL CLOSE TO 0.     IS IT ????????
A=      3000.0  B=        121.6
PXA:
   115.84     130.51     177.79     227.24     270.74     308.09

   340.03     367.39     390.87     411.07     428.50
 ITERATION SUCCESSFUL ON KI
 Q=        10.0 RMU=       300.0H=          0.0 B=       121.6A =      3000.0

B=       121.6    PXA(1) =    7986045.1
 SHAPE OF FRAC H/HZ FROM XA=1 TO 0
     1.0230       1.0334       1.0824       1.1645       1.2729       1.4051
```

```
     1.5606        1.7398        1.9438        2.1739        2.4318
 AREAS(X) AS X=A TO 0 :

.0000D  00.6348D  30.9123D  30.1258D  40.1617D  40.2038D  40.2505D  4

.3021D  40.3653D  40.4381D  40.5183D  4
VOLUME(X) AS X=A TO 0 : (CGS)

.2902D  70.7073D  70.9922D  70.1314D  80.1671D  80.2077D  80.2526D  8

.3052D  80.3673D  80.4373D  80.0000D  0
-----------------------------------------------------------------------------
NOW USE THESE RESULTS TO CALC. 1ST APPROX'N FOR L(T) [1 SEGMENT].
-----------------------------------------------------------------------------
A1,SAVT1,A4,SAVT2,ALLOG,AU,TSLOPE,TCEPT =
 0.4000D  3 0.5210D  3 0.3000D  4 0.7832D  4 0.2128D  1 0.3618D  5 0.6199D  0 0.
8392D  0
-----------------------------------------------------------------------------
NOW USE 1ST APPROX'N FOR L(T) AND A=A1 RESULTS TO ADJUST L(T)   VALUE AT A=A1.
-----------------------------------------------------------------------------
VOLUME(X) AS X=A TO 0 : (CGS)

.3466D  60.7356D  60.8559D  60.1030D  70.1233D  70.1449D  70.1670D  7

.1895D  70.2137D  70.2402D  70.0000D  0
RXA(I):   0.999D  0   0.908D  0   0.817D  0   0.726D  0   0.635D  0   0.544D  0

RXA(I):   0.454D  0   0.363D  0   0.272D  0   0.181D  0   0.899D -1  -0.100D -2
 ONE OF THE RXA'S MUST BE REAL CLOSE TO 0.    IS IT ????????
A=       440.0  B=        72.2
PXA:
   115.84     117.77     128.89     149.19     173.24     197.65

   221.09     243.14     263.71     282.84     300.60     317.07

 ITERATION SUCCESSFUL ON KI
 Q=        10.0 RMU=       300.0H=         0.0 B=        72.2A =       440.0

B=        72.2    PXA(1) =    7986045.1
 SHAPE OF FRAC H/HZ FROM XA=1 TO 0
     1.0230       1.0242       1.0322       1.0498       1.0765       1.1110

     1.1522       1.1995       1.2525       1.3110       1.3749       1.4442

 AREAS(X) AS X=A TO 0 :

.0000D  00.5665D  30.6260D  30.7393D  30.8836D  30.1043D  40.1211D  4

.1383D  40.1351D  40.1740D  40.1943D  4
VOLUME(X) AS X=A TO 0 : (CGS)

.3454D  60.7270D  60.8323D  60.9894D  60.1175D  70.1374D  70.1581D  7

.1789D  70.2006D  70.2245D  70.2500D  7
 TSLOPE,TEXPONENT =     0.61989      1.61319  , TCEPT,TDIV =      0.8392       6.904
8  , LEAKC =    0.002500
TOTLEAK=  0.7401D  7, VTOT1 =  0.1375D  8 VTOT2=  0.1556D  8
T(1)=  0.6981D  3, T(2)=  0.8141D  3 T1CHECK: (SEC,MIN)  0.8013D  3 0.1336D  2
DO T(1) AND T1CHECK COMPARE??????????
TOTAL VOLUME:(CGS,BRL,GAL) 0.2115D  8 0.1336D  3 0.5589D  4

% DIFF. BETWEEN T1CHECK AND T(1) =       12.881241
OUTPUT Q(X) AS X=0 TO A:
0.1000D  2   0.9424D  1   0.8810D  1   0.8177D  1   0.7507D  1   0.6777D  1

0.5996D  1   0.5175D  1   0.4343D  1   0.3547D  1   0.1620D  1
INPUT QX, AS X=0 TO A:
0.1000D  2   0.9000D  1   0.8000D  1   0.7000D  1   0.6000D  1   0.5000D  1
```

```
0.4000D  1   0.3000D  1   0.2000D  1   0.1000D  1   0.2220D-14
A=   0.400D  3 INPUT T=   0.698D  3 OUTPUT T=   0.801D  3 DIFT1=   0.148D  2 ADJ
USTED T ESTIMATE =   0.776D  3
-----------------------------------------------------------------------------
NOW USE 1ST APPROX'N FOR L(T) AND A=A4 RESULTS TO ADJUST L(T)   VALUE AT A=A4.
-----------------------------------------------------------------------------
VOLUME(X) AS X=A TO 0 : (CGS)
.2902D  70.7073D  70.9922D  70.1314D  80.1671D  80.2077D  80.2526D  8

.3052D  80.3673D  80.4373D  80.0000D  0
RXA(I):   0.999D  0   0.908D  0   0.817D  0   0.726D  0   0.635D  0   0.544D  0

RXA(I):   0.454D  0   0.363D  0   0.272D  0   0.181D  0   0.899D -1  -0.100D -2
 ONE OF THE RXA'S MUST BE REAL CLOSE TO 0.    IS IT ????????
A=     3300.0  B=      126.1
PXA:
   115.84    128.36    171.49    218.53    260.65    297.22

   328.82    356.13    379.76    400.26    418.08    433.61

 ITERATION SUCCESSFUL ON KI
 Q=       10.0 RMU=      300.0H=        0.0 B=      126.1A =     3300.0

B=      126.1    PXA(1) =   7986045.1
 SHAPE OF FRAC H/HZ FROM XA=1 TO 0
     1.0230      1.0317      1.0744      1.1473      1.2440      1.3620

     1.5005      1.6597      1.8403      2.0432      2.2697      2.5214

 AREAS(X) AS X=A TO 0 :
.0000D  00.6231D  30.8727D  30.1192D  40.1523D  40.1902D  40.2329D  4

.2773D  40.3330D  40.3967D  40.4683D  4
VOLUME(X) AS X=A TO 0 : (CGS)
.2849D  70.6839D  70.9441D  70.1242D  80.1566D  80.1934D  80.2333D  8

.2790D  80.3336D  80.3955D  80.4656D  8
 TSLOPE,TEXPONENT =    0.61989     1.61319  , TCEPT,TDIV =     0.8392      6.904
8  , LEAKC =   0.002500
TOTLEAK=  0.2819D  9, VTOT1 =  0.2068D  9 VTOT2=  0.2372D  9
T(1)=  0.1801D  5, T(2)=  0.2101D  5 T1CHECK: (SEC,MIN)  0.1851D  5 0.3085D  3
DO T(1) AND T1CHECK COMPARE??????????
TOTAL VOLUME:(CGS,BRL,GAL) 0.4887D  9 0.3085D  4 0.1291D  6

% DIFF. BETWEEN T1CHECK AND T(1) =       2.699029
OUTPUT Q(X) AS X=0 TO A:
0.1000D  2   0.9263D  1   0.8519D  1   0.7761D  1   0.7012D  1   0.6250D  1

0.5446D  1   0.4611D  1   0.3710D  1   0.2702D  1   0.1192D  1
INPUT QX, AS X=0 TO A:
0.1000D  2   0.9000D  1   0.8000D  1   0.7000D  1   0.6000D  1   0.5000D  1

0.4000D  1   0.3000D  1   0.2000D  1   0.1000D  1   0.2220D-14

A=   0.300D  4 INPUT T=   0.180D  5 OUTPUT T=   0.185D  5 DIFT4=   0.277D  1 ADJ
USTED T ESTIMATE =   0.184D  5
-----------------------------------------------------------------------------
NOW ADJUST L(T) [1 SEGMENT].
-----------------------------------------------------------------------------

ADJUSTED TSLOPE,TCEPT =   0.636D  0  0.763D  0
VOLUME(X) AS X=A TO 0 : (CGS)
.3466D  60.7356D  60.8559D  60.1030D  70.1233D  70.1449D  70.1670D  7

.1895D  70.2137D  70.2402D  70.0000D  0
RXA(I):   0.999D  0   0.908D  0   0.817D  0   0.726D  0   0.635D  0   0.544D  0
```

```
RXA(I):   0.454D  0   0.363D  0   0.272D  0   0.181D  0   0.899D -1  -0.100D -2
 ONE OF THE RXA'S MUST BE REAL CLOSE TO 0.     IS IT ????????
A=      440.0  B=        72.2
PXA:
   115.84    117.77    128.89    149.19    173.24    197.65

   221.09    243.14    263.71    282.84    300.60    317.07

 ITERATION SUCCESSFUL ON KI
 Q=        10.0 RMU=       300.0H=         0.0 B=        72.2A =       440.0

B=        72.2    PXA(1) =   7986045.1
 SHAPE OF FRAC H/HZ FROM XA=1 TO 0
     1.0230       1.0242       1.0322       1.0498       1.0765       1.1110

     1.1522       1.1995       1.2525       1.3110       1.3749       1.4442

 AREAS(X) AS X=A TO 0 :

.0000D  00.5665D  30.6260D  30.7393D  30.8836D  30.1043D  40.1211D  4


.1383D  40.1551D  40.1740D  40.1943D  4
VOLUME(X) AS X=A TO 0 : (CGS)

.3454D  60.7270D  60.8323D  60.9894D  60.1175D  70.1374D  70.1581D  7


.1789D  70.2006D  70.2245D  70.2500D  7
 TSLOPE,TEXPONENT =     0.63645      1.57122  , TCEPT,TDIV =      0.7630       5.794
1  , LEAKC =    0.002500
TOTLEAK=  0.7755D  7, VTOT1 =  0.1375D  8 VTOT2=  0.1556D  8
T(1)=  0.7755D  3, T(2)=  0.9008D  3 T1CHECK: (SEC,MIN)  0.8147D  3 0.1358D  2
DO T(1) AND T1CHECK COMPARE??????????
TOTAL VOLUME:(CGS,BRL,GAL) 0.2151D  8 0.1358D  3 0.5683D  4

% DIFF. BETWEEN T1CHECK AND T(1) =        4.813015
OUTPUT Q(X) AS X=0 TO A:
0.1000D  2   0.9460D  1   0.8885D  1   0.8291D  1   0.7663D  1   0.6978D  1

0.6245D  1   0.5474D  1   0.4690D  1   0.3936D  1   0.2127D  1
INPUT QX, AS X=0 TO A:
0.1000D  2   0.9000D  1   0.8000D  1   0.7000D  1   0.6000D  1   0.5000D  1

0.4000D  1   0.3000D  1   0.2000D  1   0.1000D  1   0.2220D-14

A=   0.400D  3 INPUT T=   0.776D  3 OUTPUT T=   0.815D  3 DIFT1=   0.506D  1 ADJ
USTED T ESTIMATE =   0.805D  3
-----------------------------------------------------------------------------
NOW USE 1ST APPROX'N FOR L(T) AND A=A4 RESULTS TO ADJUST L(T)   VALUE AT A=A4.
-----------------------------------------------------------------------------
VOLUME(X) AS X=A TO 0 : (CGS)

.2902D  70.7073D  70.9922D  70.1314D  80.1671D  80.2077D  80.2526D  8


.3052D  80.3673D  80.4373D  80.0000D  0
RXA(I):   0.999D  0   0.908D  0   0.817D  0   0.726D  0   0.635D  0   0.544D  0


RXA(I):   0.454D  0   0.363D  0   0.272D  0   0.181D  0   0.899D -1  -0.100D -2
 ONE OF THE RXA'S MUST BE REAL CLOSE TO 0.     IS IT ????????
A=     3300.0  B=       126.1
PXA:
   115.84    128.36    171.49    218.53    260.65    297.22

   328.82    356.13    379.76    400.26    418.08    433.61

 ITERATION SUCCESSFUL ON KI
 Q=        10.0 RMU=       300.0H=         0.0 B=       126.1A =      3300.0
```

```
B=       126.1     PXA(1) =    7986045.1
 SHAPE OF FRAC H/HZ FROM XA=1 TO 0
     1.0230       1.0317       1.0744       1.1473       1.2440       1.3620

     1.5005       1.6597       1.8403       2.0432       2.2697       2.5214

 AREAS(X) AS X=A TO 0 :

.0000D  00.6231D  30.8727D  30.1192D  40.1523D  40.1902D  40.2329D  4


.2773D  40.3330D  40.3967D  40.4683D  4
VOLUME(X) AS X=A TO 0 : (CGS)

.2849D  70.6839D  70.9441D  70.1242D  80.1566D  80.1934D  80.2333D  8


.2790D  80.3336D  80.3955D  80.4656D  8
 TSLOPE,TEXPONENT =     0.63645      1.57122   , TCEPT,TDIV =      0.7630       5.794
1   , LEAKC =    0.002500
TOTLEAK=  0.2832D  9, VTOT1 =  0.2068D  9 VTOT2=  0.2372D  9
T(1)=  0.1839D  5, T(2)=  0.2136D  5 T1CHECK: (SEC,MIN)  0.1856D  5 0.3093D  3
DO T(1) AND T1CHECK COMPARE??????????
TOTAL VOLUME:(CGS,BRL,GAL) 0.4900D  9 0.3093D  4 0.1294D  6

% DIFF. BETWEEN T1CHECK AND T(1) =        0.928687
OUTPUT Q(X) AS X=0 TO A:
0.1000D  2   0.9263D  1   0.8520D  1   0.7761D  1   0.7011D  1   0.6248D  1

0.5442D  1   0.4605D  1   0.3701D  1   0.2689D  1   0.1172D  1
INPUT QX, AS X=0 TO A:
0.1000D  2   0.9000D  1   0.8000D  1   0.7000D  1   0.6000D  1   0.5000D  1

0.4000D  1   0.3000D  1   0.2000D  1   0.1000D  1   0.2220D-14

A=   0.300D  4 INPUT T=   0.184D  5 OUTPUT T=   0.186D  5 DIFT4=   0.937D  0 ADJ
USTED T ESTIMATE =   0.185D  5
-----------------------------------------------------------------------------
NOW ADJUST L(T) [1 SEGMENT].
-----------------------------------------------------------------------------

ADJUSTED TSLOPE,TCEPT =   0.643D  0  0.735D  0

ITERATION IN IRUN=3 STOPPED BECAUSE TIME DIFFERENCES   DIFT1=        5.1 OR DIFT
2=        0.9
ARE BOTH LESS THAN        10.0 PERCENT, OR ELSE NO. OF ITERATIONS   2 EXCEEDS 4
-----------------------------------------------------------------------------
USE THIS ADJUSTED L(T) [1 SEGMENT] TO DO FULL LEAKOFF CALCN
FOR A1 THEN A2 THEN A4. FROM THE TIME DISCREPANCY WE COMPUTE
AN ADJUSTED L(T) VALUE(=TA).
-----------------------------------------------------------------------------

RXA(I):   0.999D  0   0.899D  0   0.799D  0   0.699D  0   0.599D  0   0.499D  0


RXA(I):   0.399D  0   0.299D  0   0.199D  0   0.990D -1  -0.100D -2
 ONE OF THE RXA'S MUST BE REAL CLOSE TO 0.     IS IT ????????
A=       400.0  B=        72.8
PXA:
   115.84     124.30     147.23     173.88     199.97     224.36

   246.82     267.41     286.26     303.56     319.47
 ITERATION SUCCESSFUL ON KI
 Q=        10.0 RMU=       300.0H=        0.0 B=        72.8A =       400.0

B=        72.8     PXA(1) =    7986045.1
 SHAPE OF FRAC H/HZ FROM XA=1 TO 0
     1.0230       1.0287       1.0479       1.0773       1.1147       1.1587

     1.2083       1.2631       1.3225       1.3866       1.4551
 AREAS(X) AS X=A TO 0 :

.0000D  00.6012D  30.7281D  30.8876D  30.1059D  40.1236D  40.1412D  4
```

```
.1585D  40.1777D  40.1980D  40.2192D  4
VOLUME(X) AS X=A TO 0 : (CGS)

.3665D  60.8104D  60.9849D  60.1187D  70.1399D  70.1614D  70.1827D  7

.2049D  70.2290D  70.2543D  70.0000D  0

RXA(I):   0.999D  0   0.908D  0   0.817D  0   0.726D  0   0.635D  0   0.544D  0

RXA(I):   0.454D  0   0.363D  0   0.272D  0   0.181D  0   0.899D -1  -0.100D -2

 ONE OF THE RXA'S MUST BE REAL CLOSE TO 0.     IS IT ????????
A=      440.0  B=        74.1
PXA:
   115.84    123.36    144.50    169.53    194.35    217.75

   239.46    259.48    277.91    294.89    310.56    325.05

 ITERATION SUCCESSFUL ON KI
 Q=        10.0 RMU=       300.0H=         0.0 B=        74.1A =       440.0

B=        74.1    PXA(1) =    7986045.1
 SHAPE OF FRAC H/HZ FROM XA=1 TO 0
     1.0230       1.0281       1.0453       1.0720       1.1059       1.1458

     1.1910       1.2408       1.2950       1.3532       1.4155       1.4817

 AREAS(X) AS X=A TO 0 :

.0000D  00.5962D  30.7125D  30.8606D  30.1021D  40.1186D  40.1353D  4

.1514D  40.1688D  40.1875D  40.2070D  4
VOLUME(X) AS X=A TO 0 : (CGS)

.3634D  60.7978D  60.9590D  60.1147D  70.1346D  70.1548D  70.1748D  7

.1952D  70.2172D  70.2405D  70.2647D  7
 TSLOPE,TEXPONENT =     0.64258      1.55622  , TCEPT,TDIV =      0.7349       5.431
0  , LEAKC =    0.002500
TOTLEAK=  0.7883D  7, VTOT1 =  0.1507D  8 VTOT2=  0.1708D  8
T(1)=  0.8049D  3, T(2)=  0.9336D  3 T1CHECK: (SEC,MIN)  0.8695D  3 0.1449D  2
DO T(1) AND T1CHECK COMPARE??????????
TOTAL VOLUME:(CGS,BRL,GAL) 0.2296D  8 0.1449D  3 0.6065D  4

% DIFF. BETWEEN T1CHECK AND T(1) =        7.430103
OUTPUT Q(X) AS X=0 TO A:
0.1000D  2   0.9454D  1   0.8871D  1   0.8258D  1   0.7627D  1   0.6954D  1

0.6215D  1   0.5418D  1   0.4566D  1   0.3674D  1   0.1755D  1
INPUT QX, AS X=0 TO A:
0.1000D  2   0.9345D  1   0.8664D  1   0.7968D  1   0.7248D  1   0.6484D  1

0.5684D  1   0.4855D  1   0.4017D  1   0.3202D  1   0.1596D  1

FLOW RATE CONVERGES TO WITHIN        20. PERCENT AFTER    0 ITERATIONS

A=        440. OLD TA=       804.9 NEW TA=       869.5 ADJUSTED TA=       853.4

RXA(I):   0.999D  0   0.899D  0   0.799D  0   0.699D  0   0.599D  0   0.499D  0

RXA(I):   0.399D  0   0.299D  0   0.199D  0   0.990D -1  -0.100D -2
 ONE OF THE RXA'S MUST BE REAL CLOSE TO 0.     IS IT ????????
A=     1000.0  B=        88.8
PXA:
   115.84    131.85    168.13    204.60    237.59    266.94

   293.02    316.21    336.92    355.48    372.16
 ITERATION SUCCESSFUL ON KI
 Q=        10.0 RMU=       300.0H=         0.0 B=        88.8A =      1000.0

B=        88.8    PXA(1) =    7986045.1
 SHAPE OF FRAC H/HZ FROM XA=1 TO 0
     1.0230       1.0345       1.0703       1.1224       1.1868       1.2617
```

```
    1.3464       1.4403       1.5433       1.6554       1.7769
 AREAS(X) AS X=A TO 0 :

.0000D  00.6421D  30.8519D  30.1092D  40.1339D  40.1581D  40.1853D  4


.2146D  40.2455D  40.2763D  40.3134D  4
VOLUME(X) AS X=A TO 0 : (CGS)

.9785D  60.2277D  70.2962D  70.3703D  70.4449D  70.5233D  70.6095D  7


.7012D  70.7951D  70.8987D  70.0000D  0

RXA(I):   0.999D  0   0.908D  0   0.817D  0   0.726D  0   0.635D  0   0.544D  0


RXA(I):   0.454D  0   0.363D  0   0.272D  0   0.181D  0   0.899D -1  -0.100D -2

 ONE OF THE RXA'S MUST BE REAL CLOSE TO 0.    IS IT ????????
A=     1100.0  B=       91.2
FXA:
   115.84    130.16    164.03    198.77    230.52    258.99

   284.45    307.24    327.69    346.10    362.73    377.78

 ITERATION SUCCESSFUL ON KI
 Q=       10.0 RMU=      300.0H=        0.0 B=       91.2A =     1100.0

B=       91.2    FXA(1) =   7986045.1
 SHAPE OF FRAC H/HZ FROM XA=1 TO 0
    1.0230       1.0331       1.0655       1.1128       1.1714       1.2395

    1.3164       1.4015       1.4948       1.5960       1.7055       1.8232

 AREAS(X) AS X=A TO 0 :

.0000D  00.6328D  30.8270D  30.1051D  40.1283D  40.1510D  40.1757D  4


.2027D  40.2312D  40.2605D  40.2917D  4
VOLUME(X) AS X=A TO 0 : (CGS)

.9645D  60.2225D  70.2862D  70.3557D  70.4257D  70.4979D  70.5766D  7


.6611D  70.7493D  70.8416D  70.9440D  7
 TSLOPE,TEXPONENT =    0.64258     1.55622  , TCEPT,TDIV =     0.7349      5.431
0  , LEAKC =    0.002500
TOTLEAK=  0.4021D  8, VTOT1 =  0.4965D  8 VTOT2=  0.5657D  8
T(1)=  0.3350D  4, T(2)=  0.3886D  4 T1CHECK: (SEC,MIN)  0.3404D  4 0.5673D  2
DO T(1) AND T1CHECK COMPARE??????????
TOTAL VOLUME:(CGS,BRL,GAL) 0.8985D  8 0.5673D  3 0.2374D  5

% DIFF. BETWEEN T1CHECK AND T(1) =       1.576083
OUTPUT Q(X) AS X=0 TO A:
0.1000D  2   0.9385D  1   0.8756D  1   0.8107D  1   0.7417D  1   0.6698D  1

0.5955D  1   0.5159D  1   0.4279D  1   0.3308D  1   0.1630D  1
INPUT QX, AS X=0 TO A:
0.1000D  2   0.9271D  1   0.8527D  1   0.7770D  1   0.7003D  1   0.6210D  1

0.5383D  1   0.4530D  1   0.3646D  1   0.2735D  1   0.1237D  1

A=      1100. OLD TA=     3349.9 NEW TA=     3403.5 ADJUSTED TA=     3390.1

RXA(I):   0.999D  0   0.899D  0   0.799D  0   0.699D  0   0.599D  0   0.499D  0


RXA(I):   0.399D  0   0.299D  0   0.199D  0   0.990D -1  -0.100D -2
 ONE OF THE RXA'S MUST BE REAL CLOSE TO 0.    IS IT ????????
A=     3000.0  B=      125.6
FXA:
   115.84    147.33    202.62    250.78    291.09    324.98

   353.70    378.18    399.21    417.37    433.11
 ITERATION SUCCESSFUL ON KI
 Q=       10.0 RMU=      300.0H=        0.0 B=      125.6A =     3000.0
```

```
B=       125.6     PXA(1) =    7986045.1
 SHAPE OF FRAC H/HZ FROM XA=1 TO 0
     1.0230       1.0480       1.1191       1.2181       1.3394       1.4814

     1.6437       1.8267       2.0316       2.2596       2.5123
 AREAS(X) AS X=A TO 0 :

.0000D  00.7287D  30.1078D  40.1444D  40.1831D  40.2272D  40.2733D  4


.3288D  40.3930D  40.4652D  40.5468D  4
VOLUME(X) AS X=A TO 0 : (CGS)

.3331D  70.8259D  70.1153D  80.1497D  80.1875D  80.2288D  80.2752D  8


.3300D  80.3924D  80.4627D  80.0000D  0
RXA(I):   0.999D  0   0.908D  0   0.817D  0   0.726D  0   0.635D  0   0.544D  0


RXA(I):   0.454D  0   0.363D  0   0.272D  0   0.181D  0   0.899D -1  -0.100D -2
 ONE OF THE RXA'S MUST BE REAL CLOSE TO 0.     IS IT ????????
A=      3300.0  B=       130.4
PXA:
   115.84     144.32     196.71     243.20     282.50     315.81

   344.27     368.69     389.80     408.14     424.14     438.16

 ITERATION SUCCESSFUL ON KI
 Q=        10.0 RMU=       300.0H=         0.0 B=       130.4A =      3300.0

B=       130.4     PXA(1) =    7986045.1
 SHAPE OF FRAC H/HZ FROM XA=1 TO 0
     1.0230       1.0452       1.1096       1.1997       1.3099       1.4385

     1.5851       1.7498       1.9332       2.1366       2.3609       2.6076

 AREAS(X) AS X=A TO 0 :

.0000D  00.7115D  30.1037D  40.1383D  40.1736D  40.2141D  40.2574D  4


.3051D  40.3620D  40.4263D  40.4967D  4
VOLUME(X) AS X=A TO 0 : (CGS)

.3253D  70.7994D  70.1106D  80.1426D  80.1773D  80.2156D  80.2572D  8


.3050D  80.3604D  80.4220D  80.4924D  8
 TSLOPE,TEXPONENT =     0.64258      1.55622  , TCEPT,TDIV =      0.7349       5.431
0  , LEAKC =    0.002500
TOTLEAK=  0.2836D  9, VTOT1 =  0.2258D  9 VTOT2=  0.2596D  9
T(1)=  0.1852D  5, T(2)=  0.2148D  5 T1CHECK: (SEC,MIN)  0.1929D  5 0.3215D  3
DO T(1) AND T1CHECK COMPARE??????????
TOTAL VOLUME:(CGS,BRL,GAL) 0.5093D  9 0.3215D  4 0.1346D  6

% DIFF. BETWEEN T1CHECK AND T(1) =        4.028898
OUTPUT Q(X) AS X=0 TO A:
0.1000D  2   0.9244D  1   0.8482D  1   0.7698D  1   0.6904D  1   0.6104D  1

0.5276D  1   0.4408D  1   0.3472D  1   0.2402D  1   0.7895D  0
INPUT QX, AS X=0 TO A:
0.1000D  2   0.9197D  1   0.8390D  1   0.7571D  1   0.6758D  1   0.5936D  1

0.5082D  1   0.4204D  1   0.3276D  1   0.2267D  1   0.8790D  0

FLOW RATE CONVERGES TO WITHIN        20. PERCENT AFTER    0 ITERATIONS

A=       3300. OLD TA=    18515.6 NEW TA=    19292.9 ADJUSTED TA=    19098.6

-------------------------------------------------------------------------------
NOW CALC. ADJUSTED L(T) FOR 2 LINE-SEGMENTS.
-------------------------------------------------------------------------------

FROM        400. TO       1000. TSLOPE=       0.664 TCEPT=       0.655
FROM       1000. TO       3000. TSLOPE=       0.635 TCEPT=       0.757
```

```
-----------------------------------------------------------------------------
NOW DO FULL LEAKOFF CALCN, BASED ON 2 LINE-SEGMENTS OF L(T),
FOR A=A1, THEN A2, THEN A4. THIS IS ITERATED TIL IRUN=IRUNZ.
E.G. IRUNZ=8 GIVES 2(NOTE IT IS TWO!!!) OF THESE ITERATIONS.
-----------------------------------------------------------------------------

RXA(I):   0.999D  0   0.899D  0   0.799D  0   0.699D  0   0.599D  0   0.499D  0

RXA(I):   0.399D  0   0.299D  0   0.199D  0   0.990D -1  -0.100D -2
 ONE OF THE RXA'S MUST BE REAL CLOSE TO 0.    IS IT ????????
A=      400.0  B=       73.1
FXA:
   115.84    125.08    149.50    177.02    203.43    227.79

   250.02    270.25    288.72    305.62    321.13
 ITERATION SUCCESSFUL ON KI
 Q=       10.0 RMU=      300.0H=        0.0 B=       73.1A =      400.0

B=       73.1    FXA(1) =   7986045.1
 SHAPE OF FRAC H/HZ FROM XA=1 TO 0
     1.0230      1.0293      1.0501      1.0814      1.1204      1.1657

     1.2162      1.2714      1.3311      1.3949      1.4629
 AREAS(X) AS X=A TO 0 :

.0000D  00.6054D  30.7411D  30.9074D  30.1083D  40.1262D  40.1438D  4

.1612D  40.1804D  40.2006D  40.2215D  4
VOLUME(X) AS X=A TO 0 : (CGS)

.3691D  60.8208D  60.1005D  70.1214D  70.1430D  70.1646D  70.1860D  7

.2082D  70.2322D  70.2573D  70.0000D  0
RXA(I):   0.999D  0   0.908D  0   0.817D  0   0.726D  0   0.635D  0   0.544D  0

RXA(I):   0.454D  0   0.363D  0   0.272D  0   0.181D  0   0.899D -1  -0.100D -2
 ONE OF THE RXA'S MUST BE REAL CLOSE TO 0.    IS IT ????????
A=      440.0  B=       74.5
FXA:
   115.84    124.05    146.64    172.60    197.83    221.30

   242.86    262.60    280.68    297.30    312.60    326.71

 ITERATION SUCCESSFUL ON KI
 Q=       10.0 RMU=      300.0H=        0.0 B=       74.5A =      440.0

B=       74.5    FXA(1) =   7986045.1
 SHAPE OF FRAC H/HZ FROM XA=1 TO 0
     1.0230      1.0286      1.0473      1.0757      1.1113      1.1526

     1.1989      1.2494      1.3039      1.3623      1.4243      1.4899

 AREAS(X) AS X=A TO 0 :

.0000D  00.5999D  30.7247D  30.8796D  30.1045D  40.1213D  40.1381D  4

.1538D  40.1717D  40.1903D  40.2097D  4
VOLUME(X) AS X=A TO 0 : (CGS)

.3657D  60.8075D  60.9780D  60.1173D  70.1376D  70.1581D  70.1779D  7

.1984D  70.2207D  70.2439D  70.2679D  7
 TSLOPE,TEXPONENT =    0.66425     1.50545  , TCEPT,TDIV =     0.6550      4.519
1  , LEAKC =    0.002500
TOTLEAK=  0.8380D  7, VTOT1 =  0.1532D  8 VTOT2=  0.1737D  8
T(1)=  0.8534D  3, T(2)=  0.9850D  3 T1CHECK: (SEC,MIN)  0.8978D  3 0.1496D  2
DO T(1) AND T1CHECK COMPARE??????????
TOTAL VOLUME:(CGS,BRL,GAL) 0.2370D  8 0.1496D  3 0.6262D  4

% DIFF. BETWEEN T1CHECK AND T(1) =        4.948695
OUTPUT Q(X) AS X=0 TO A:
0.1000D  2   0.9463D  1   0.8892D  1   0.8289D  1   0.7676D  1   0.7024D  1
```

```
0.6303D  1   0.5524D  1   0.4692D  1   0.3830D  1   0.2034D  1
INPUT QX, AS X=0 TO A:
0.1000D  2   0.9426D  1   0.8819D  1   0.8186D  1   0.7532D  1   0.6636D  1

0.6082D  1   0.5277D  1   0.4429D  1   0.3556D  1   0.1715D  1

FLOW RATE CONVERGES TO WITHIN        20. PERCENT AFTER    0 ITERATIONS

A=        440. OLD TA=       853.4 NEW TA=       897.8 ADJUSTED TA=       886.7

RXA(I):   0.999D  0   0.899D  0   0.799D  0   0.699D  0   0.599D  0   0.499D  0


RXA(I):   0.399D  0   0.299D  0   0.199D  0   0.990D -1  -0.100D -2
 ONE OF THE RXA'S MUST BE REAL CLOSE TO 0.    IS IT ????????
A=     1000.0  B=        89.6
PXA:
   115.84    134.05    172.47    209.66    242.63    271.59

   297.13    319.77    339.92    357.91    374.05
 ITERATION SUCCESSFUL ON KI
 Q=        10.0 RMU=       300.0H=         0.0 B=        89.6A =      1000.0

B=        89.6    PXA(1) =   7986045.1
 SHAPE OF FRAC H/HZ FROM XA=1 TO 0
     1.0230      1.0362      1.0756      1.1311      1.1983      1.2754

     1.3616      1.4565      1.5590      1.6718      1.7922
 AREAS(X) AS X=A TO 0 :

.0000D  00.6541D  30.8788D  30.1127D  40.1379D  40.1625D  40.1901D  4


.2196D  40.2503D  40.2817D  40.3181D  4
VOLUME(X) AS X=A TO 0 : (CGS)

.9969D  60.2336D  70.3058D  70.3819D  70.4578D  70.5374D  70.6244D  7


.7162D  70.8108D  70.9141D  70.0000D  0

RXA(I):   0.999D  0   0.908D  0   0.817D  0   0.726D  0   0.635D  0   0.544D  0


RXA(I):   0.454D  0   0.363D  0   0.272D  0   0.181D  0   0.899D -1  -0.100D -2

 ONE OF THE RXA'S MUST BE REAL CLOSE TO 0.    IS IT ????????
A=     1100.0  B=        92.0
PXA:
   115.84    132.21    168.26    203.85    235.72    263.91

   288.91    311.18    331.11    348.99    365.10    379.66

 ITERATION SUCCESSFUL ON KI
 Q=        10.0 RMU=       300.0H=         0.0 B=        92.0A =      1100.0

B=        92.0    PXA(1) =   7986045.1
 SHAPE OF FRAC H/HZ FROM XA=1 TO 0
     1.0230      1.0347      1.0705      1.1211      1.1826      1.2531

     1.3317      1.4182      1.5122      1.6137      1.7228      1.8395

 AREAS(X) AS X=A TO 0 :

.0000D  00.6440D  30.8528D  30.1086D  40.1324D  40.1553D  40.1806D  4


.2078D  40.2364D  40.2653D  40.2969D  4
VOLUME(X) AS X=A TO 0 : (CGS)

.9815D  60.2281D  70.2955D  70.3673D  70.4384D  70.5119D  70.5919D  7


.6769D  70.7646D  70.8569D  70.9596D  7
 TSLOPE,TEXPONENT =     0.66425      1.50545  , TCEPT,TDIV =      0.6550      4.519
1  , LEAKC =    0.002500
TOTLEAK=  0.4055D  8, VTOT1 =  0.5082D  8 VTOT2=  0.5789D  8
T(1)=  0.3390D  4, T(2)=  0.3913D  4 T1CHECK: (SEC,MIN)  0.3461D  4 0.5768D  2
DO T(1) AND T1CHECK COMPARE??????????
TOTAL VOLUME:(CGS,BRL,GAL) 0.9136D  8 0.5768D  3 0.2414D  5
```

```
% DIFF. BETWEEN T1CHECK AND T(1) =        2.040893
OUTPUT Q(X) AS X=0 TO A:
0.1000D  2   0.9378D  1   0.8745D  1   0.8086D  1   0.7385D  1   0.6650D  1

0.5892D  1   0.5082D  1   0.4180D  1   0.3178D  1   0.1452D  1
INPUT QX, AS X=0 TO A:
0.1000D  2   0.9357D  1   0.8699D  1   0.8022D  1   0.7314D  1   0.6576D  1

0.5812D  1   0.5002D  1   0.4121D  1   0.3165D  1   0.1532D  1

FLOW RATE CONVERGES TO WITHIN        20. PERCENT AFTER    0 ITERATIONS

A=      1100. OLD TA=     3390.1 NEW TA=     3460.8 ADJUSTED TA=     3443.1

RXA(I):   0.999D  0   0.899D  0   0.799D  0   0.699D  0   0.599D  0   0.499D  0


RXA(I):   0.399D  0   0.299D  0   0.199D  0   0.990D -1  -0.100D -2
 ONE OF THE RXA'S MUST BE REAL CLOSE TO 0.    IS IT ????????
A=     3000.0  B=       126.2
PXA:
   115.84    147.89    204.32    252.81    293.08    326.77

   355.22    379.46    400.26    418.20    433.73
 ITERATION SUCCESSFUL ON KI
 Q=        10.0 RMU=      300.0H=        0.0 B=      126.2A =     3000.0

B=      126.2    PXA(1) =   7986045.1
 SHAPE OF FRAC H/HZ FROM XA=1 TO 0
     1.0230      1.0485      1.1219      1.2233      1.3466      1.4902

     1.6537      1.8377      2.0433      2.2714      2.5236
 AREAS(X) AS X=A TO 0 :

.0000D  00.7319D  30.1090D  40.1461D  40.1853D  40.2298D  40.2758D  4


.3322D  40.3967D  40.4689D  40.5507D  4
VOLUME(X) AS X=A TO 0 : (CGS)

.3346D  70.8328D  70.1166D  80.1515D  80.1898D  80.2312D  80.2780D  8


.3333D  80.3958D  80.4661D  80.0000D  0
RXA(I):   0.999D  0   0.908D  0   0.817D  0   0.726D  0   0.635D  0   0.544D  0


RXA(I):   0.454D  0   0.363D  0   0.272D  0   0.181D  0   0.899D -1  -0.100D -2
 ONE OF THE RXA'S MUST BE REAL CLOSE TO 0.    IS IT ????????
A=     3300.0  B=       131.0
PXA:
   115.84    144.75    198.32    245.22    284.55    317.72

   345.93    370.12    391.01    409.14    424.94    438.76

 ITERATION SUCCESSFUL ON KI
 Q=        10.0 RMU=      300.0H=        0.0 B=      131.0A =     3300.0

B=      131.0    PXA(1) =   7986045.1
 SHAPE OF FRAC H/HZ FROM XA=1 TO 0
     1.0230      1.0456      1.1121      1.2045      1.3167      1.4471

     1.5950      1.7608      1.9452      2.1491      2.3735      2.6196

 AREAS(X) AS X=A TO 0 :

.0000D  00.7140D  30.1048D  40.1400D  40.1758D  40.2167D  40.2602D  4


.3085D  40.3658D  40.4303D  40.5006D  4
VOLUME(X) AS X=A TO 0 : (CGS)

.3264D  70.8055D  70.1119D  80.1444D  80.1795D  80.2181D  80.2600D  8
```

```
.3083D  80.3640D  80.4256D  80.4961D  8
 TSLOPE,TEXPONENT =     0.63550      1.57357  , TCEPT,TDIV =      0.7566       5.709
C  , LEAKC =    0.002500
TOTLEAK=  0.2887D  9, VTOT1 =  0.2279D  9 VTOT2=  0.2621D  9
T(1)=  0.1910D  5, T(2)=  0.2219D  5 T1CHECK: (SEC,MIN)  0.1957D  5 0.3261D  3
DO T(1) AND T1CHECK COMPARE??????????
TOTAL VOLUME:(CGS,BRL,GAL) 0.5166D  9 0.3261D  4 0.1365D  6

% DIFF. BETWEEN T1CHECK AND T(1) =       2.403758
OUTPUT Q(X) AS X=0 TO A:
0.1000D  2   0.9263D  1   0.8521D  1   0.7756D  1   0.6979D  1   0.6197D  1

0.5390D  1   0.4542D  1   0.3627D  1   0.2580D  1   0.1008D  1
INPUT QX, AS X=0 TO A:
0.1000D  2   0.9233D  1   0.8459D  1   0.7666D  1   0.6868D  1   0.6062D  1

0.5227D  1   0.4357D  1   0.3423D  1   0.2368D  1   0.8119D  0

A=      3300. OLD TA=    19098.6 NEW TA=    19569.0 ADJUSTED TA=    19451.4
-------------------------------------------------------------------------------
ADJUSTED L(T) =
-------------------------------------------------------------------------------

FROM       400. TO      1000. TSLOPE=      0.675 TCEPT=      0.611
FROM      1000. TO      3000. TSLOPE=      0.634 TCEPT=      0.756
```

☆U.S. GOVERNMENT PRINTING OFFICE: 1983-669-030/38