DOE/BC/15178-2

Title: Advanced Cuttings Transport Study

Type of Report: Quarterly
Reporting Period Start Date: Jan 1, 2001
Reporting Period End Date: March 31, 2001

Principal Authors:
Troy Reed, Principal Investigator
Stefan Miska, Co-Principal Investigator
Nicholas Takach, Co-Principal Investigator
Kaveh Ashenayi, Co-Principal Investigator
Gerald Kane
Mark Pickell
Len Volk
Mike Volk
Affonso Lourenco
Evren Ozbayoglu
Lei Zhou

Date of Issue: April 30, 2001
DOE Award Number: DE-FG26-9BC15178

The University of Tulsa
600 South College Avenue
Tulsa, Oklahoma 74104

DISCLAIMER

This report was prepared as an account of work sponsored by an agency of the United States Government, Neither the United States Government nor any agency thereof, nor any of their employees, makes any warranty, express or implied, or assumes any legal liability or responsibility for the accuracy, completeness, or usefulness of any information, apparatus, product, or process disclosed, or represents that its use would not infringe privately owned rights. Reference herein to any specific commercial product, process, or service by trade name, trademark, manufacturer, or otherwise does not necessarily constitute or imply, its endorsement, recommendation, or favoring, by the United States Government or agency thereof. The views and opinions of authors expressed herein do not necessarily state or reflect those of the United States Government or any agency thereof.

1. SUMMARY OF CURRENT TASKS FOR ACTS PROJECT

This is the third quarterly progress report for Year 2 of the ACTS project. It includes a review of progress made in Flow Loop development and research during the period of time between January 1, 2000 and March 31, 2001.

This report presents a review of progress on the following specific tasks:

a) Design and development of an Advanced Cuttings Transport Facility (**Task 2**: Addition of a foam generation and breaker system),

b) Research project (**Task 6**): " Study of Cuttings Transport with Foam Under LPAT Conditions (Joint Project with TUDRP)",

c) Research project (**Task 9**): " Study of Foam Flow Behavior Under EPET Conditions",

d) Research project (**Task 10**): "Study of Cuttings Transport with Aerated Mud Under Elevated Pressure and Temperature Conditions",

e) Research on instrumentation tasks to measure:
- Cuttings concentration and distribution in a flowing slurry (**Task 11**), and
- Foam properties while transporting cuttings. (**Task 12**),

f) Development of a Safety program for the ACTS Flow Loop.
Progress on a comprehensive safety review of all flow-loop components and operational procedures. (**Task 1S**).

g) Activities towards technology transfer and developing contacts with Petroleum and service company members, and increasing the number of JIP members.

1B. Tasks Completed During Previous Quarters of Yr-2

- Research project (**Task 7**): " Study of Cuttings Transport with Aerated Muds Under LPAT Conditions (Joint Project with TUDRP)"

- Research project (**Task 8**): "Study of Flow of Synthetic Drilling Fluids Under Elevated Pressure and Temperature Conditions",

2. EXECUTIVE SUMMARY OF PROGRESS

Flow Loop Construction **(Task 2)**
Construction and development of the flow loop is continuing. During this quarter, the component parts for the air/foam system have been received and are currently being installed and connected to the loop. Unusually severe winter weather delayed installation of additional electrical power for the new Moyno pump, its controls and other components. It currently appears the new foam generation/breaker system will be operational in late April or early May. Additional discussion of this task is given in Section 3 of this report.

Study of Cuttings Transport with Foam Under LPAT Conditions, (**Task 6**).
Modifications on the layered cuttings transport model for horizontal and inclined wellbores are in progress. Additional theoretical work is being done on cuttings transport and compressible fluid flow. Experiments were postponed and rescheduled for May 2001 due to failure of the compressor used in these experiments. A new compressor has been purchases and is being installed.

Significant progress has been made on the development of a new model for the transport of cuttings through an annulus with foam. A new procedure has been developed for estimating the effects of wall slip and the different geometric cross-sections that occur in a multi-layered model of cuttings transport in annuli. This new procedure permits the calculation of a Reynolds number that can be used to define friction factors and shear stresses at the interfaces between the different layers. These new modeling efforts are described further in Section 4.

Study of Cuttings Transport with Aerated Muds Under LPAT Conditions, (**Task 7**).
This research project has been completed, and an MS thesis has been written.
A copy is being provided to the DOE and JIP members.

Study of Flow of Synthetic Drilling Fluids Under Elevated Pressure and Temperature Conditions, (**Task 8**).
This research project has been completed, and an MS thesis has been written.
A copy is being provided to the DOE and JIP members.

Study of Foam Flow Behavior Under EPET Conditions, (**Task 9**).
During the time that the Flow Loop has been under construction during this past quarter, additional work has been accomplished on developing a model for the flow of foams in the ACTS Flow Loop. A hydraulics model for foams, that includes a Yield stress and shear thinning effects, is being developed. In addition, the effects of changes in pressure, temperature, conduit geometry, wall roughness and other variables on foam hydraulics are being considered in the model. Section 7 of this report summarizes work on this research project.

Study of Cuttings Transport with Aerated Mud Under Elevated Pressure and Temperature Conditions, (**Task 10**).

The objective of ACTS Task 10 is to measure frictional pressure drops with aerated muds flowing through both pipes and an annular geometry under elevated pressure and temperature conditions. In addition, these tests will include cuttings transport. The relevant literature is being reviewed, and the selection of a mathematical model is underway. A multi-layered model is being developed similar to the model for Task 6, but in this case the separate air and water phases complicates the flow patterns and requires the addition of an air layer above the other layers of: 1) stationary cuttings, 2) a moving slurry of cuttings and liquid, and 3) a liquid layer with negligible cuttings and little or no air. This phenomenon increases the difficulty of calculating interfacial shear stresses at the boundaries between the different layers. The status of this research project is given in Section 8.

Research on Instrumentation to Measure Cuttings Concentration and Distribution in a Flowing Slurry, (**Task 11**).

Work is continuing on the development of an ultrasonic instrumentation to measure cuttings concentration and distribution within an annular geometry.
Tests with a particular ultrasonic sensor set (transmitter and receiver) have been tested on different concentrations of cuttings suspended in a static polymer gel. The instrument (a Massa sensor package TR2445/210) provides a signal that changes with cuttings concentration. This task is reviewed in Section 9.

Research on Instrumentation to Measure Foam Properties while Transporting Cuttings, (**Task 12**).

Construction of the lab-scale flow loop for dynamic foam characterization and cuttings monitoring instrumentation tests is nearing completion. Additional components have been added during this quarter. Selection of a camera and optical system for measurements of foam properties (such as bubble size and size distribution) will be made during the coming quarter. An essential part of this measurement task is selection of a computer program to assist with processing the photographic data. The initiation of testing of foams is expected in early May. The status of this work is reviewed in Section 10.

Safety Program for the ACTS Flow Loop (**Task 1S**).

The “Process Hazards Review Committee” is scheduled to conduct a two-day review of the Flow Loop on April 30 and May 1. Its mission is to conduct a safety review of the ACTS Flow Loop and operational procedures. The necessary design drawings, component specifications and other documents are now assembled. In addition, the majority of valves and other critical components have been numbered and tagged to facilitate a comprehensive review by the committee. They will assess what is satisfactory and what needs to be changed and/or improved. Additional discussion of this task appears in Section 11.

Activities towards Technology Transfer, Developing Contacts with Petroleum & Service Company Members, and Addition of JIP Members.

The next Advisory Board Meeting with ACTS-JIP industry members is being planned for May 22, 2001. During this quarter, Conoco and Weatherford Drilling & Intervention Services have decided to join. Both of these companies have been sent a Letter of Agreement for the ACTS Project. In addition, we are continuing to make new contacts with other companies in the Petroleum Industry in our search for new JIP members. Further discussion of these activities is given in Section 13.

TABLE OF CONTENTS

DISCLAIMER ……. 2

1. SUMMARY OF CURRENT TASKS FOR ACTS PROJECT ……. 3

2. EXECUTIVE SUMMARY OF PROGRESS ……. 4

LIST OF TABLES ……. 8

LIST OF FIGURES ……. 8

3. ACTF DESIGN AND CONSTRUCTION ACCOMPLISHMENTS …….. 9

4. STUDY OF CUTTINGS TRANSPORT WITH FOAM UNDER LPAT CONDITION ……. 15

5. STUDY OF CUTTINGS TRANSPORT WITH AERATED MUDS UNDER LPAT CONDITIONS ……. 31

6. STUDY OF FLOW OF SYNTHETIC DRILLING FLUIDS UNDER ELEVATED PRESSURE AND TEMPERATURE CONDITIONS …… 32

7. STUDY OF FOAM FLOW BEHAVIOR UNDER EPET CONDITIONS … 33

8. STUDY OF CUTTINGS TRANSPORT WITH AERATED MUDS UNDER EPAT CONDITIONS ……. 45

9. DEVELOPMENT OF CUTTINGS MONITORING METHODOLOGY …… 53

10. DEVELOPMENT OF METHODS FOR CHARACTERIZING BUBBLES IN ENERGIZED FLUIDS ……. 54

11. SAFETY PROGRAM ……. 58

12. TECHNOLOGY TRANSFER ……. 65

LIST OF TABLES

ACTF DESIGN AND CONSTRUCTION ACCOMPLISHMENTS (Task 2, Sec. 3
Table 3.2 – Yr-2 EQUIPMENT AND COMPONENTS FOR FLOW LOOP …… 12

STUDY OF FOAM FLOW BEHAVIOR UNDER EPET CONDITIONS (Task 9, Sec. 7)
Table 7.1 – Modified Test Matrix …… 35

SAFETY PROGRAM (TASK 1S, Sec.12)
Table 12.1 – Review Team and Work Team Members 59

LIST OF FIGURES

ACTF DESIGN AND CONSTRUCTION ACCOMPLISHMENTS (Task 2, Sec. 3)

Fig. 3.1 - ACTS Flow Loop with New Foam Generation Components Indicated with Dashed Lines 11

STUDY OF CUTTINGS TRANSPORT WITH AERATED MUDS UNDER EPAT CONDITIONS (Task 10, Sec. 8)

Fig. 8.1 - Schematic Diagram of Layered Model for Horizontal Annulus. 47

Fig. 8.2 - Annular Geometry Analysis. 51

DEVELOPMENT OF METHODS FOR CHARACTERIZING BUBBLES IN ENERGIZED FLUIDS (Task 12, Sec. 10)
Figure 10.1a – Schematic of Dynamic Testing Facility – April 2001 56

Figure 10.1b – Nitrogen Gas Manifold for DTF – April 2001 57

Figure 10.1c – Key for Figures 10.1a and 10.1b – April 2001 57

SAFETY PROGRAM FOR ACTS FLOW LOOP (Task 1S, Sec.11)
Figure 12.a – ACTS Schematic – Part 1 of 2 . . . .…….. 61

Figure 12.b – ACTS Schematic – Part 2 of 2 . . . .…….. 62

Figure 12.c – Schematic for Diesel Tank Subsytem of ACTS . . . . . ….. 63

Figure 12.d – Schematic for Surge Tank Subsystems of ACTS 63

Figure 12.e – Key for Figures 12.1 through 12.d . . . .…….. 64

3. ACTF DESIGN AND CONSTRUCTION ACCOMPLISHMENTS

3.1 Construction – Jan 1 thru March 31, 2001

The primary construction objective for the second year is to add the capability for testing foams at elevated temperatures and pressures. During this quarter, all component parts for the air/foam system have been received and installed. All piping modifications necessary for the new components have been made. Key components of the new foam system are:

- A Moyno Pump which can deliver up to 500 gpm at low pressures or can deliver a pressure increase of 500 psi at low flow rates,
- A diesel powered Air Compressor that can deliver up to 400 scfm of air @ 200 psi,
- An air accumulator tank,
- Injection pumps for water, surfactant and a de-foaming agent,
- Liquid and air meters for controlling foam quality,
- Additional electrical power,
- New programming is being added to LabView for data acquisition and control of the various components of the flow-loop system. Controls are necessary for processes such as: the injection of water, air, surfactant, Moyno pump speed and valves. Also, new programming is needed for recording and processing the additional test data.

These new components of the foam generating system required the addition of electrical power transformers and wiring conduits. The new additions are indicated in dashed lines on the updated schematic of the ACTS Flow Loop shown on the following page, Fig. 3.1.

A prototype for a clear test section has been ordered. Zelux was selected as the transparent material for a portion of the outer pipe that forms the annular section of the flow loop. It is a high strength polycarbonate. The prototype will undergo pressure tests at 200 F. It will first be tested at a pressure of 700 psi for 24 hours, then 2,000 psi for 24 hours, and then pressurized to burst failure. This will provide the necessary data to decide whether this material will perform satisfactorily in the ACTS Flow Loop. If Zelux passes the pressure tests, it will be used to make four 3-ft sections that will be installed along the annular test section. The purpose is to allow visual observations of multiphase flow patterns and slugging of liquids and solids. This will enable a better understanding of the complex flow phenomena that can occur in three-phase flows.

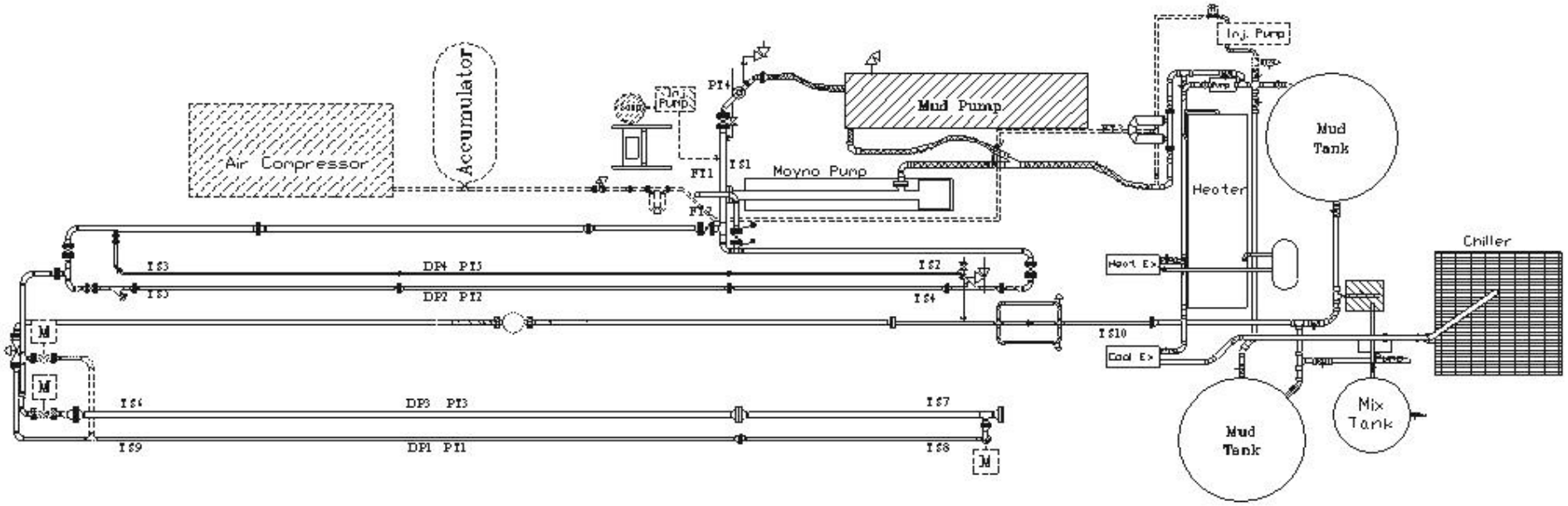

Fig. 3.1 ACTS Flow Loop with New Foam Generation Components indicated with Dashed Lines

Quick opening and closing valves and pressure transducers have been ordered for Liquid Hold-up measurements. They will be installed during the 4th quarter of Yr-2.

Finally, a significant amount of effort has been devoted this quarter to reviewing safety aspects of the flow loop. Some changes in design have resulted. These include the addition of more pressure relief valves, the replacement of some high-pressure rubber hoses on the intake side of pumps with steel pipe and braided-metal flexible connectors, and the addition of conduits to safely convey any flow from relief valves. In addition to reviews by Tulsa University personnel, a Process Hazards Review Committee is planning to do a safety review in late April and/or early May. This Committee has some non-TU personnel that will provide the necessary independence needed for a credible safety review. Additional discussion of the Safety Program (Task 1S) is given in Section 13 of this report

3.2 Plans for Next Quarter (April – June, 2001)

Design and Construction efforts for the next quarter will consist of the following four primary tasks.

- Start-up and calibration of the new air/foam system.
- Installation of the clear sections for the Annulus.
- Add a nuclear densitometer to the annular section
- Install valves and components for liquid hold-up measurements..

The following is a list of equipment and components that are being added to the Flow Loop during Yr-2 of the ACTS Project.

TABLE 3.2 - Yr-2 EQUIPMENT AND COMPONENTS FOR FLOW LOOP

1	4" low pressure relief valve in tank piping
2	Pressure test proto-type Clear Section for Annulus (700 psi, 2,000 psi, burst)
3	3/4" relief valve on Halliburton Pump suction piping
4	225 psi relief valve on liquid injection pump discharge piping
5	Flex hose on Moyno pump suction piping
6	Install new piping to connect Separator Tower to existing Flow Loop
7	Design, fabricate & install Foam Separator Tower
8	Replace two 20” gaskets on Separator Tower (initial pressure tests revealed leaks)
9	Relief valve for separator tower
10	4” viewport for observing breakage of foam at Separator Tower
11	Design & install an Injection System for Foam Breaking Agent upstream of Separator
12	Liquid hold-up valves
13	Liquid hold-up piping
14	Liquid hold-up differential pressure transmitter
15	Contract welding labor for liquid hold-up piping
16	Surfactant injection tubing and fittings
17	Two electrical power transformers
18	Conduit, wire, and mounting hardware for new electrical transformers
19	Shower / eyewash station
20	New pressure transmitter for pump suction piping
21	New pressure transmitter for separator tower
22	New differential pressure transmitter for separator tower
23	Tubing, fittings, and connectors for separator tower instruments
24	Air and water injection piping
25	New air lines for control valves
26	Micro-motion meter for water injection system
27	Micro-motion meter for air injection system

28 Mist eliminator pad for separator tower
29 Moyno pump suction and discharge piping fittings
30 Contract welding for Moyno pump suction and discharge piping
31 Air regulators for new control valves
32 Strainer for liquid injection pump suction piping
33 Chemical tank and stand for surfactant injection pump system
34 Chemical tank and stand for foam breaker injection pump system
35 Relief valve for air accumulator
36 Air accumulator tank
37 Air compressor
38 Fabricate and install support stands for air compressor
39 Pressure gage for air accumulator
40 Drain valve for air accumulator
41 Vent valve for separator tower
42 4” Static Mixer downstream of Moyno Pump for generating foam
43 Surfactant injection pump
44 Surfactant injection pump controller
45 Surfactant injection pump dampener
46 Pressure gages for air regulators
47 Pressure gage for separator tower
48 Pipe fittings at both suction & discharge ends of Moyno pump
49 Liquid metering pump
50 3" viewport for observing flow of foam thru 3” rheological test section
51 2" viewport for observing flow of foam thru 2” rheological test section
52 Computer interface boards
53 2 mounting plates for switch cabinets
54 Motor starter for liquid injection pump
55 Motor starter for surfactant injection pump
56 Motor starter for Moyno pump remote
57 Emergency shutdown switch for system control
58 Emergency shutdown switch for liquid injection pump
59 Emergency shutdown switch for surfactant injection pump
60 2 cabinets for new electrical power transformers
61 Power cabinet for Moyno power cables
62 Power cabinet for liquid injection pump
63 Power cabinet for surfactant injection pump
64 Power disconnect for Moyno pump
65 Power disconnect for liquid injection pump

66 power disconnect for surfactant injection pump
67 Separator tower vent valve
68 Foam breaker spray bars
69 Foam breaker injection check valve
70 Surfactant injection check valve
71 Air and water injection piping check valves
72 Support Stand for Moyno VFD
73 Support Stand for transformer power cabinets
74 Support Stand for Surfactant power cabinets and controls
75 Support Stand for liquid injection pump controls
76 Drain valve for liquid injection pump discharge piping
77 Drain valve for liquid injection pump suction piping
78 Hazard warning signs for Diesel Tank
79 Hazard warning signs for Surfactant Tank
80 Hazard warning signs for Foam Breaker Tank
81 Hazard warning signs for Mud Tank #1
82 Hazard warning signs for Mud Tank #2
83 Relief valve drain piping
84 Separator support stand
85 Moyno pump discharge isolation valve
86 Moyno pump tie-down brackets
87 Moyno and Halliburton steel piping on suction side
88 Moyno pump relief by-pass piping
89 Design, fabricate & install four 3-ft clear sections
90 Programming LABVIEW for new controls and processing test data
91 A Nuclear Densitometer for measurements of Slurries inside Annulus

5. STUDY OF CUTTINGS TRANSPORT WITH FOAM UNDER LPAT CONDITIONS (Task 6)

Investigator: Evren Ozbayoglu (Ph.D. Candidate)

OBJECTIVES

- To investigate foam rheology and flow behavior in pipe and annulus.
- To determine (experimentally) and to predict (numerically) frictional pressure losses (with and without cuttings) and volumetric requirements (injection rate, injection pressure and backpressure) for effective cuttings transport with foam flow in inclined and horizontal wellbores.

PROJECT STATUS

- Modifications on the layered cuttings transport model for horizontal and inclined wellbores are in progress.
- Additional theoretical work is being done on cuttings transport and compressible fluid flow.
- Experiments were postponed and rescheduled for May 2001 due to failure of the compressor used in these experiments. A new compressor has been purchased and is being installed. The old compressor is being repaired in order to have a backup in the future.

Table 4.1 – WORK DONE

Literature Survey	Rheology of Foam	90%
	Cuttings Transport Phenomena	90%
Modification of Loop for Foam Flow	Plan	99%
	Construction	99%
Experiments Performed	Foam without Cuttings	70%
	Foam with Cuttings	10%
Model Developed	Rheology Review	95%
	Cuttings Effect	90%
Computer Simulator	Without Cuttings	90%
	With Cuttings	0%

FUTURE WORK

The literature survey on foam rheology, foam flow models and cuttings transport will continue. Experiments on cuttings transport with foam will be continued when the new compressor is installed. The friction factors and layer geometry definitions will be determined by using existing and new experimental data. The results will also be compared with a neural network model (ANN) A computer simulator will be developed by using a mechanistic model.

In the DOE Progress Report, dated October 2000, a layered model approach was introduced. According to the model, at most three separate layers develop during a drilling operation at any wellbore inclination. *Layer-I* represents a stationary bed, *Layer-II* represents the cuttings and fluid mixture, and finally, *Layer-III* represents the pure fluid region.

The most difficult part to define in this model is the *Layer-II*. In this section, a more detailed discussion is presented for *Layer-II* from a physical point of view.

CUTTINGS IN SUSPENSION

In Figure 4.1, a free body diagram is given for a single cuttings particle. The forces acting on the particle, when there is a flow, are presented.

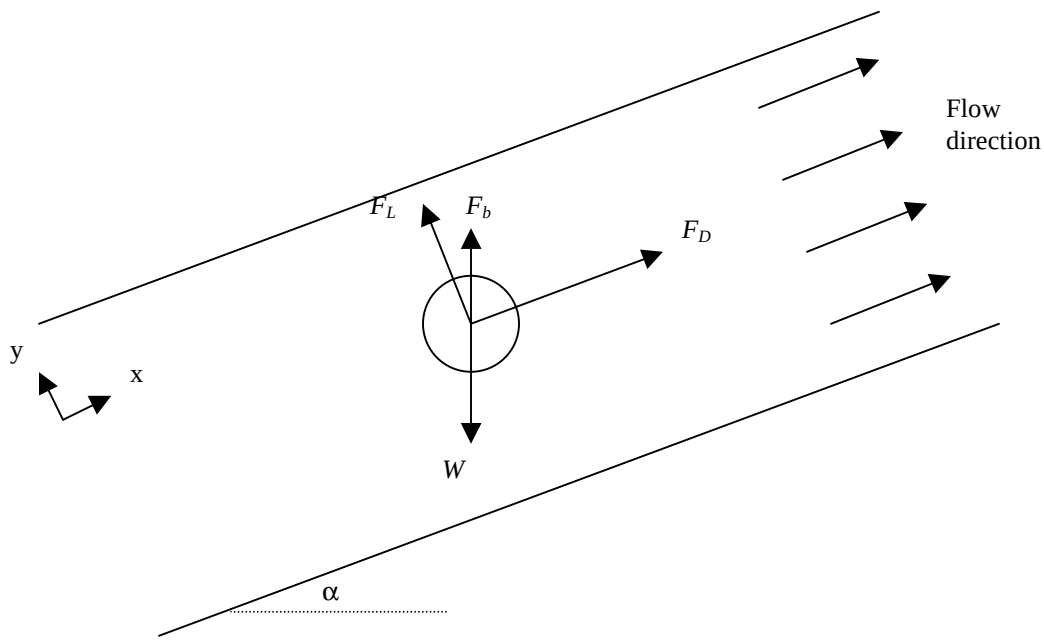

Figure 4.1 - Cuttings particle in suspension

If a force balance is applied under the assumptions that, the cuttings are not moving, and the acceleration effects are ignored, the following equations can be developed for *x* and *y* directions.

$$\sum F_x = 0 = -W\,Cos(\alpha) + F_L + F_b\,Cos(\alpha)$$

$$\sum F_y = 0 = -W\,Sin(\alpha) + F_D + F_b\,Sin(\alpha)$$

CUTTINGS ON BED SURFACE

In Figure 4.2, a cuttings particle is lying on the surface of a cuttings bed. Since the angle of repose is not uniform (and cannot be controlled), the contact

between a cuttings particle and the cuttings bed is described with a friction force rather than a moment approach.

If a force balance is applied under the assumptions that, the cuttings is not moving, and the acceleration effects are ignored, the following equations can be developed for *x* and *y* directions.

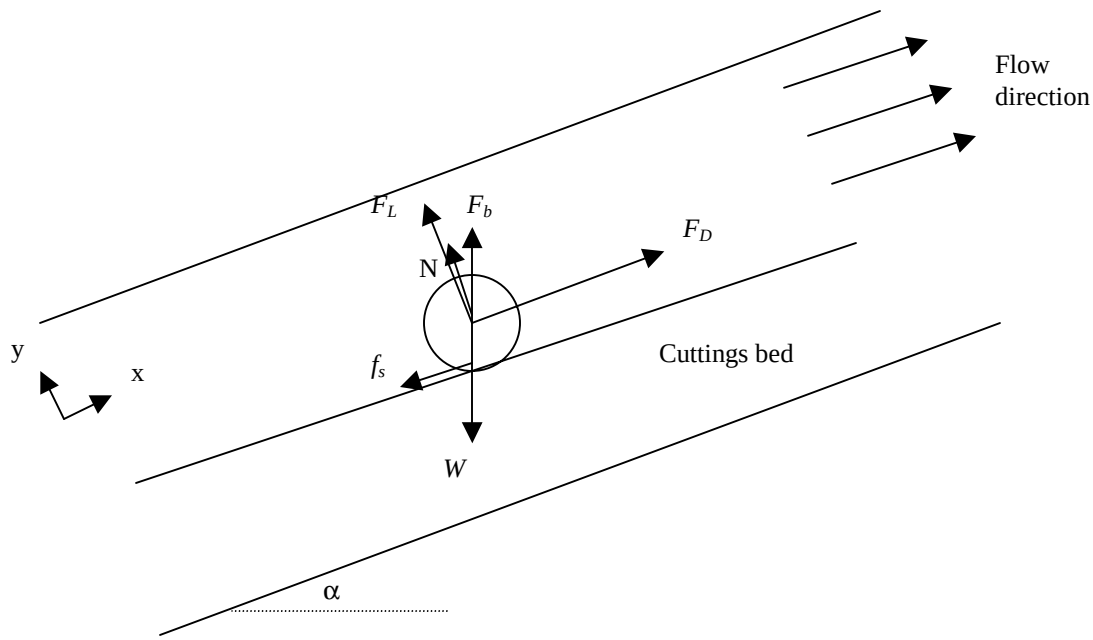

Figure 4.2 - Cuttings particle on bed surface

$$\sum F_x = 0 = -W\,Sin(\alpha) + F_D + F_b\,Sin(\alpha) - f_s$$

$$\sum F_y = 0 = -W\,Cos(\alpha) + F_L + F_b\,Cos(\alpha) + N$$

These equations can be solved for fluid velocity present in F_L and F_D terms. The velocity found by using these equations would be the minimum velocity required to keep the particle in suspension or prevent the particle from moving in the opposite direction of the flow, or to lift the particle, which are all the mandatory conditions for a successful cuttings transport process.

DEFINITIONS OF THE FORCES ACTING ON A CUTTINGS PARTICLE

The weight of a single cuttings particle can be defined as

$$W = \frac{\pi}{6} d_c^3\, \rho_c\, \vec{g}$$

The drag and lift forces acting on a single cuttings particle can be derived as

$$F_D = \frac{1}{2} C_D \frac{\pi}{4} d_c^2 \, \rho_f \, \upsilon^2$$

$$F_L = \frac{1}{2} C_L \frac{\pi}{4} d_c^2 \, \rho_f \, \upsilon^2$$

The friction force between a cuttings particle and the cuttings bed can be defined by a friction factor. Since the particle is assumed to be initially stationary, the force applied on the particle has to be higher than the static friction force. Therefore, a static friction factor is used.

$$f_s = N \, \mu_s = W \, Sin(\alpha)$$

The buoyancy force acting on a single cuttings particle by the fluid can be defined as

$$F_b = \frac{\pi}{6} d_c^3 \, \rho_f \, \vec{g}$$

The only unknowns are the drag and lift coefficients present in the drag and lift force equations. In the literature, there are many studies, which have been conducted for defining these coefficients empirically. Below, the correlations developed by White[1] and White[2] are presented. The development of these equations is based on momentum conservation, and they are improved with extensive experimental data. The particles are assumed to be spherical.

The drag coefficient can be determined by using this correlation

$$C_D = \frac{24}{N_{\mathrm{Re}_p}} + \frac{6}{1 + \sqrt{N_{\mathrm{Re}_p}}} + 0.4$$

where

$$N_{\mathrm{Re}_p} = \frac{\rho \, d_c \, \upsilon}{\mu_a}$$

This equation is valid for $0.1 < N_{\mathrm{Re}_P} < 2.010^5$

The apparent viscosity can be defined as

$$\mu_a = \frac{\tau}{\gamma}$$

where the particle shear rate can be derived by using Stokes' Law as

$$\gamma = \frac{3\upsilon}{d_c}$$

The lift coefficient is defined empirically as

$$C_L = \frac{4114}{N_{\mathrm{Re}}^{\ *}}$$

where

$$N_{\mathrm{Re}}^{\ *} = \frac{\upsilon^* d_c \rho}{\mu_a}$$

and

$$\upsilon^* = \sqrt{\frac{\tau_w}{\rho}}$$

Since the layered model defined in this study requires a good definition for the layer geometries, an analysis for the flow of compressible fluids in non-circular geometries is mandatory.

FLOW OF A COMPRESSIBLE FLUID IN PIPES

Figure 4.3 represents an infinitesimal fluid element for a compressible fluid flowing in a circular pipe. The difference between an incompressible and compressible fluid is that, the total linear momentum is not zero because of the expansion.

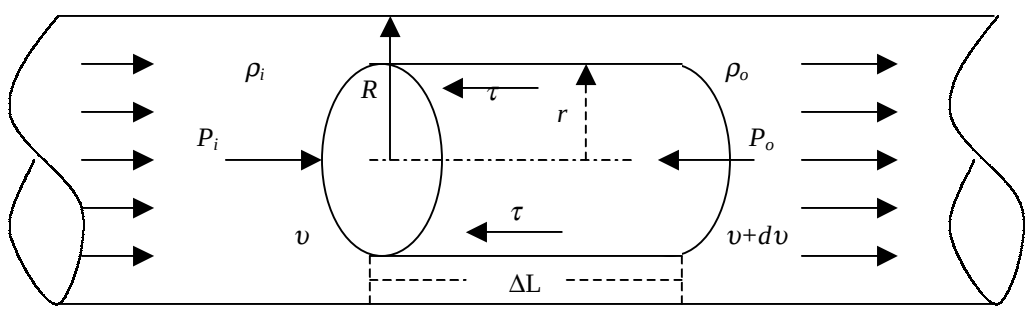

Figure 4.3 – Flow of compressible fluid in a circular pipe

The conservation of momentum can be defined for a compressible fluid as follows:

$$\sum \vec{F} = \iint_{CS} \vec{\upsilon}\bar{\rho}\left(\vec{\upsilon}.\vec{n}\right)dA = \left(\upsilon + d\upsilon\right)\bar{\rho}\left(\upsilon + d\upsilon\right)\pi r^2 - \upsilon^2\bar{\rho}\pi r^2$$

where the average density can be defined as

$$\bar{\rho} = \frac{\rho_i + \rho_o}{2}$$

The force balance on the infinitesimal fluid particle shown in Figure 4.3 is

$$\sum \vec{F} = P_i\pi r^2 - P_o\pi r^2 - \tau 2\pi r\Delta L$$

Equalizing the both equations, the shear stress can be derived as

$$\tau = \frac{\Delta P}{\Delta L}\frac{r}{2} - r\bar{\rho}\upsilon\frac{d\upsilon}{dL}$$

At the pipe wall, the shear stress can be found as

$$\tau_w = \frac{\Delta P}{\Delta L}\frac{R}{2} - R\bar{\rho}\upsilon\frac{d\upsilon}{dL}$$

Therefore, a relation can be found between the shear stress and the wall shear stress as

$$\frac{\tau}{\tau_w} = \frac{r}{R}$$

For any fluid flow, the mass flow rate is constant, although the volumetric flow rate is varying. If the average density definition is used, the mass flow rate can be defined as

$$\dot{m} = \bar{Q}\bar{\rho}$$

Therefore, an averaged volumetric flow rate can also be determined.

$$\bar{Q} = \int_0^{2\pi}\int_0^R \upsilon\, r\, dr\, d\theta = -\pi\int_0^R r^2 d\upsilon$$

Defining $d\upsilon$ as a function of shear stress as

$$d\upsilon = -f\left(\tau\right)dr$$

and using the relation between the shear stress and wall shear stress,

$$dr = \frac{R}{\tau_w} d\tau$$

the volumetric flow rate can be written as

$$\bar{Q} = \pi \left(\frac{R}{\tau_w} \right)^3 \int_0^{\tau_w} \tau^2 f(\tau) d\tau$$

By taking the derivatives with respect to τ_w of both sides,

$$\frac{\partial}{\partial \tau_w} \left(\frac{Q \tau_w^3}{\pi R^3} \right) = \frac{\partial}{\partial \tau_w} \int_0^{\tau_w} \tau^2 f(\tau) d\tau$$

the wall shear rate can be found as

$$f(\tau_w) = \left(-\frac{\partial \upsilon}{\partial r} \right) = \frac{3\bar{Q}}{\pi R^3} + \tau_w \frac{\partial}{\partial \tau_w} \left(\frac{Q}{\pi R^3} \right)$$

By inserting the definition of average flow rate,

$$\bar{Q} = \frac{\pi}{4} D^2 \upsilon$$

the wall shear rate can be derived as

$$f(\tau_w) = 3\left(\frac{8\upsilon}{D} \right) + \left(\frac{D}{4} \frac{\Delta P}{\Delta L} - \frac{D}{2} \bar{\rho} \upsilon \frac{\partial \upsilon}{\partial L} \right) \frac{\partial \left(\frac{8\upsilon}{D} \right)}{\partial \left(\frac{D}{4} \frac{\Delta P}{\Delta L} - \frac{D}{2} \bar{\rho} \upsilon \frac{\partial \upsilon}{\partial L} \right)}$$

The above equation can be simplified into the form

$$f(\tau_w) = \left(-\frac{\partial \upsilon}{\partial r} \right) = \left(\frac{8\upsilon}{D} \right) \left[\frac{3N+1}{4N} \right]$$

where

$$N = \frac{\partial \ln\left(\frac{D}{4}\frac{\Delta P}{\Delta L} - \frac{D}{2}\bar{\rho}\upsilon\frac{\partial \upsilon}{\partial L}\right)}{\partial \ln\left(\frac{8\upsilon}{D}\right)}$$

FLOW OF A COMPRESSIBLE FLUID IN ANNULAR GEOMETRY (NARROW SLOT APPROACH)

A similar analysis can be done for annular flow. A few attempts has been tried for an exact solution for annular geometry by various researchers. However, because of the discontinuity of the velocity and shear stress functions with respect to radius as well as the non-symmetric flow conditions, the attempts failed. Therefore, a narrow-slot approximation is used to define the annular geometry because of the mathematical simplifications that it introduces. The infinitesimal fluid element for representing a compressible fluid flow between two parallel plates is presented in Figure 4.4.

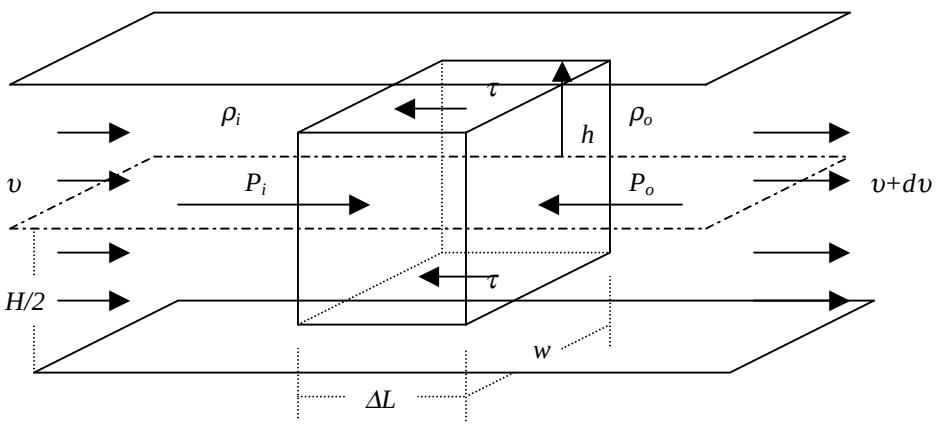

Figure 4.4 - Flow of compressible fluid between two parallel plates

The conservation of momentum can be defined for a compressible fluid as follows:

$$\sum \vec{F} = \iint_{CS} \vec{\upsilon}\bar{\rho}\left(\vec{\upsilon}.\vec{n}\right)dA = \left(\upsilon + d\upsilon\right)\bar{\rho}\left(\upsilon + d\upsilon\right)2hw - \upsilon^2\bar{\rho}2hw$$

where the average density can be defined as

$$\bar{\rho} = \frac{\rho_i + \rho_o}{2}$$

The force balance on the infinitesimal fluid particle shown in Figure 4.3 is

$$\sum \vec{F} = P_i 2hw - P_o 2hw - \tau 2w\Delta L$$

Equalizing the two equations, the shear stress can be derived as

$$\tau = \frac{\Delta P}{\Delta L} h - 2h\bar{\rho}\upsilon \frac{d\upsilon}{dL}$$

At the walls, the shear stress can be found as

$$\tau_w = \frac{\Delta P}{\Delta L} \frac{H}{2} - H\bar{\rho}\upsilon \frac{d\upsilon}{dL}$$

Therefore, a relation can be found between the shear stress and the wall shear stress as

$$\frac{\tau}{\tau_w} = \frac{h}{2H}$$

If the average density definition is used as in pipe flow derivation, the mass flow rate can be defined as

$$\dot{m} = \bar{Q}\bar{\rho}$$

So, the volumetric flow rate can be defined as

$$\bar{Q} = 2w \int_0^{H/2} \upsilon \, dh = -2w \int_0^{H/2} h \, d\upsilon$$

Defining $d\upsilon$ as a function of shear stress as

$$d\upsilon = -f(\tau) dh$$

and using the relation between the shear stress and wall shear stress,

$$dh = \frac{H}{2\tau_w} d\tau$$

the volumetric flow rate can be written as

$$\bar{Q} = \frac{wH^2}{2\tau_w^2} \int_0^{\tau_w} \tau f(\tau) d\tau$$

By taking the derivatives with respect to τ_w of both sides,

$$\frac{\partial}{\partial \tau_w}\left(\frac{Q\,2\tau_w^2}{wH^2}\right)=\frac{\partial}{\partial \tau_w}\int_0^{\tau_w}\tau f(\tau)\,d\tau$$

Therefore, the wall shear rate can be derived as

$$f(\tau_w)=\left(-\frac{\partial \upsilon}{\partial h}\right)=\frac{4\bar{Q}}{wH^2}+\tau_w\frac{\partial}{\partial \tau_w}\left(\frac{2Q}{wH^2}\right)$$

By inserting the definitions

$$\bar{Q}=wH\upsilon$$

$$H=\frac{D_2-D_1}{2}$$

and

$$w=\frac{\pi}{2}(D_2+D_1)$$

into the wall shear rate equation, the following equation can be derived

$$f(\tau_w)=\frac{8\upsilon}{D_H}+\frac{1}{2}\left(\frac{D_H}{4}\frac{\Delta P}{\Delta L}-\frac{D_H}{2}\bar{\rho}\upsilon\frac{\partial \upsilon}{\partial L}\right)\frac{\partial\left(\frac{8\upsilon}{D_H}\right)}{\partial\left(\frac{D_H}{4}\frac{\Delta P}{\Delta L}-\frac{D_H}{2}\bar{\rho}\upsilon\frac{\partial \upsilon}{\partial L}\right)}$$

This equation can be put into this form

$$f(\tau_w)=\left(-\frac{\partial \upsilon}{\partial h}\right)=\left(\frac{8\upsilon}{D_H}\right)\left[\frac{2N+1}{2N}\right]$$

where

$$N=\frac{\partial \ln\left(\frac{D_H}{4}\frac{\Delta P}{\Delta L}-\frac{D_H}{2}\bar{\rho}\upsilon\frac{\partial \upsilon}{\partial L}\right)}{\partial \ln\left(\frac{8\upsilon}{D_H}\right)}$$

If one looks at the shear rate equation for compressible flow in pipes

$$f(\tau_w) = 3\left(\frac{8\upsilon}{D}\right) + \left(\frac{D}{4}\frac{\Delta P}{\Delta L} - \frac{D}{2}\bar{\rho}\upsilon\frac{\partial\upsilon}{\partial L}\right)\frac{\partial\left(\frac{8\upsilon}{D}\right)}{\partial\left(\frac{D}{4}\frac{\Delta P}{\Delta L} - \frac{D}{2}\bar{\rho}\upsilon\frac{\partial\upsilon}{\partial L}\right)}$$

and the shear rate equation for compressible flow between parallel plates

$$f(\tau_w) = \frac{8\upsilon}{D_H} + \frac{1}{2}\left(\frac{D_H}{4}\frac{\Delta P}{\Delta L} - \frac{D_H}{2}\bar{\rho}\upsilon\frac{\partial\upsilon}{\partial L}\right)\frac{\partial\left(\frac{8\upsilon}{D_H}\right)}{\partial\left(\frac{D_H}{4}\frac{\Delta P}{\Delta L} - \frac{D_H}{2}\bar{\rho}\upsilon\frac{\partial\upsilon}{\partial L}\right)}$$

a similarity between the two equations can be seen. Therefore, a more general definition for shear rate can be written as

$$f(\tau_w) = a\frac{8\upsilon}{D_H} + b\left(\frac{D_H}{4}\frac{\Delta P}{\Delta L} - \frac{D_H}{2}\bar{\rho}\upsilon\frac{\partial\upsilon}{\partial L}\right)\frac{\partial\left(\frac{8\upsilon}{D_H}\right)}{\partial\left(\frac{D_H}{4}\frac{\Delta P}{\Delta L} - \frac{D_H}{2}\bar{\rho}\upsilon\frac{\partial\upsilon}{\partial L}\right)} = \left(\frac{8\upsilon}{D_H}\right)\left[a + \frac{b}{N}\right] = \gamma_w$$

Where *a* and *b* are constants that can be define for a given geometry when flow occurs. The above equation can be integrated, and the following equation can be derived.

$$\frac{8\upsilon}{D_H} = \frac{1}{b}(\tau_w)^{-\frac{a}{b}}\int_0^{\tau_w}\tau^{\frac{a}{b}-1}f(\tau)\,d\tau$$

This equation is a very general equation which is valid for any kind of flow geometry as long as the right combination of *a* and *b* is defined. By using the data presented by Kozicki[3] for different conduits and geometries, empirical correlations are determined for *a* and *b* as a function of a dimensionless diameter defined as

$$d_{\dim} = \frac{D_H}{D_{eq}}$$

where

$$D_{eq} = \sqrt{\frac{Flow\,Area}{\frac{\pi}{4}}}$$

The relation for *a* is found to be

$$a = 1.01207 + \left(-0.250479\right) d_{\dim}{}^{1.56283}$$

and for *b* is

$$b = 0.509821 + \left(-0.242033\right) d_{\dim}{}^{1.365517}$$

In fact, when $D_i = 0$, then $d_{\dim} = 1$, which represents a circular pipe, $a = \frac{3}{4}$ and $b = \frac{1}{4}$. So, the equation above reduces to the well-known Rabinowitsch-Mooney correlation that was derived for flow in circular pipes when the velocity change in the axial direction is ignored.

As shown before, $f\left(\tau_w\right)$ is the wall shear rate

$$f\left(\tau_w\right) = \left(-\frac{\partial \upsilon}{\partial r}\right)_w$$

If the definition of the wall shear rate is inserted into the above equation and the integration is done, a relation for pressure drop can be determined as a function of flow rate.

<u>Newtonian Model</u>

The wall shear rate for Newtonian Model can be derived as

$$f\left(\tau_w\right) = \frac{\tau}{\mu}$$

So, *N* and K' can be defined for Newtonian Model as

$$N = 1$$

and

$$K' = \left(a + b\right)\mu$$

<u>Bingham Plastic Model</u>

The wall shear rate for a Bingham Plastic Model can be derived as

$$f(\tau_w) = \frac{\tau - \tau_y}{\mu_p}$$

So, *N* and K' can be defined for the Bingham Plastic Model as

$$N = 1 - \frac{(a+b)\tau_y}{a\tau_w}$$

and

$$K' = \left(a + \frac{b}{n}\right)\left(\frac{8\upsilon}{D_H}\right)^{1-N} \mu_p$$

<u>Power Law Model</u>

The wall shear rate for a Power Law Model can be derived as

$$f(\tau_w) = \left(\frac{\tau}{K}\right)^{\frac{1}{n}}$$

So, *N* and K' can be defined for the Power Law Model as

$$N = n$$

and

$$K' = K\left(a + \frac{b}{n}\right)^n$$

<u>Yield Power Law Model</u>

The wall shear rate for a Yield Power Law Model can be derived as

$$f(\tau_w) = \left(\frac{\tau - \tau_y}{K}\right)^{\frac{1}{m}}$$

So, *N* and K' can be defined for the Yield Power Law Model as

$$N = \frac{b}{\left(\frac{\left(1 - \frac{\tau_w}{\tau_y}\right)^{\frac{1}{n}}}{\sum_{k=0}^{\infty} \left[\left(\frac{a}{b}\right)_k \frac{\left(-\frac{1}{n}\right)_k}{\left(\frac{a+b}{b}\right)_k} \frac{\left(\frac{\tau_w}{\tau_y}\right)^k}{k!} \right]} - 1 \right)}$$

and

$$K' = \left(\frac{1}{\left(\frac{8\upsilon}{D_H}\right)} \right)^N \left(K \left(\left(a + \frac{b}{n} \right) \left(\frac{8\upsilon}{D_H} \right) \right)^m + \tau_y \right)$$

The generalized Reynolds Number can be derived as

$$N_{\mathrm{Re}_{general}} = \frac{8^{1-N} \rho \upsilon^{2-N} D_H^N}{K'} \quad .$$

Therefore, for laminar flow, the friction factor can be determined as

$$f = \frac{16}{N_{\mathrm{Re}}} \quad ,$$

and for turbulent flow, the appropriate friction factor equation can be used, e.g., Colebrook, to determine the pressure drop.

MODIFICATIONS ON THE LAYERED MODEL

As mentioned in the DOE Oct 2000 Progress Report, the friction factors and the layer geometry will be determined by using dimensionless groups. Actually, the numbers of dimensionless groups were determined to be 7 for friction factor and 6 for a geometry definition. After further study, the numbers of dimensionless groups are reduced for both friction factor and the geometry definition.

For friction factor, the variables thought to be effective for developing the dimensionless groups are μ, υ, ρ and D. Here note that: the quality, rheological

effects, and the solids concentration are already defined in μ, the slip effects are present in υ, the non-uniform structure of the layer geometry is described in *D*, and the quality and effects of solid concentration are included in ρ. Therefore, only one dimensionless group can be defined by using these variables, which is the Reynolds Number itself. Hence, the friction factors can be developed as a function of Reynolds Number, which has already done by many researchers. So, determination of Reynolds Number will provide a way to compute friction factors.

For geometry definition, $\bar{C}$, θ, ρ, $\vec{g}$, μ, $\bar{\upsilon}$, D and $A/A_{wellbore}$ will be the variables effective on determination of the dimensionless groups. After dimensionless analysis, 5 groups are developed. The relation for geometry definition is found to be

$$\frac{A}{A_{wellbore}} = f\left(\bar{C}, \theta, N_{\mathrm{Re}}, N_{Fr}\right)$$

where

$$N_{Fr} = \frac{\upsilon^2}{\vec{g}\, D}$$

Also, as mentioned in the Jan. 2001 DOE Progress Report, friction factors and $\frac{A}{A_{wellbore}}$ will be determined by using neural network technique, and a comparison will be conducted.

NOMENCLATURE

a	Geometric constant
A	Area
b	Geometric constant
C	Cuttings concentration
C_D	Drag coefficient
C_L	Lift Coefficient
D, d	Diameter
F_b	Buoyancy force
F_D	Drag force
F_L	Lift force
f_s	Friction
g	Gravity
h	Representative distance between parallel plates
K'	Generalized Consistency Index used for non-Newtonian Rheology
L	Length
m	Rheological parameter

n	Rheological parameter
N	Rheological parameter
N_{Fr}	Froude number
N_{Re}	Reynolds number
P	Pressure
Q	Flow rate
W	Weight
υ	Velocity
μ	Viscosity
ρ	Density
τ	Shear stress
γ	Shear rate

Subscripts

a	Apparent
c	Cuttings
H	Hydraulic
i	Inlet
o	Outlet
p	Particle
w	Wall
y	Yield

REFERENCES

1. White, F., Viscous Fluid Flow, McGraw-Hill (1974), pp. 203-210
2. White, B. R., "Particle Dynamics in Two-Phase Flows", Encyclopedia of Fluid Mechanics Volume-4, Gulf (1986), Chapter 8
3. Kozicki W., Tiu C., "Parametric Modeling of Flow Geometries in Non-Newtonian Flows", Encyclopedia of Fluid Mechanics Volume-7, Gulf (1988), Chapter 8

5. STUDY OF CUTTINGS TRANSPORT WITH AERATED MUDS UNDER LPAT CONDITIONS (Task 7)

Investigator: Paco Vieira (MS Candidate)

Sponsors: PDVSA/TUDRP

M.S. Thesis Title: "EXPERIMENTAL DETERMINATION OF MINIMUM AIR AND WATER FLOW RATES FOR EFFECTIVE CUTTINGS TRANSPORT IN HIGH ANGLE AND HORIZONTAL WELLS", January 2001.

This task was completed in December, 2000. A report has been issued and sent to the DOE.

6. STUDY OF FLOW OF SYNTHETIC DRILLING FLUIDS UNDER ELEVATED PRESSURE AND TEPERATURE (EPET) CONDITIONS (Task 8)

Investigator: Barkim Demirdal (MS Candidate)

M.S. Thesis Title: "THE STUDY OF FLOW OF PARAFFIN BASED DRILLING FLUIDS AT ELEVATED PRESSURE AND ELEVATED TEMPERATURE (EPET) CONDITIONS", January 2001.

This task was completed in December, 2000. A Report has been issued and sent to the DOE.

7. STUDY OF FOAM FLOW BEHAVIOR UNDER ELEVATED PRESSURE AND TEMPERATURE CONDITIONS (Task 9)

Investigator: Affonso Marcelo Fernandes Lourenço (MS Candidate)

7.1 Objectives

➢ Perform experimental study of foam flow behavior inside pipes and annuli in a large-scale loop (ACTS) under elevated pressures and temperatures.

➢ Develop empirical correlations to estimate pressure losses during foam flow under a given gas-liquid ratio, temperature and pressure conditions.

7.2 Summary of Activities

The following major tasks have been undertaken since January 2000:

- ACTS Flow Loop improvement
- Advances and new proposals in modeling the process of foam flow under elevated temperatures and pressures

ACTS Flow Loop Modifications for Foam Flow Experiments

Several important modifications occurred in the ACTS flow loop since the last report, as discussed in Section 3 of this report. One of the ongoing essential tasks is the implementation of the process control and data acquisition systems. These LabView based systems, after completion, will be responsible for the control of most equipment from the control room. A lot of effort has been made to have flow rates (gas and liquid phases) and pressure automatically controlled during experiments. A significant portion of the programming work is finished and some capabilities, that were described previously, are already available like the automatic control of flow rates and an emergency shut-down procedure. A pressure control system is under development and will be finalized during the start-up and shake down process; along with equipment testing.

Defoaming Operation

The defoaming operation appears as one of the most challenging steps to be completed for future foam experiments. To be able to accomplish this task in an optimized way the choice for a silicone based defoaming agent was done. This defoamer was chosen because of good results obtained from bench tests and tests performed in the low-pressure flow loop. Small amounts of the product (50 ppm) were sufficient to break high quality foams generated in a blender. In addition, it was the most effective type of defoaming agent used during low pressure foam experiments. It was found that the amount of defoamer should be

4% by volume of the surfactant in order to break foam streams of different qualities.

A view port was installed at the inlet of the defoaming tower. This will permit viewing the process of breaking the foam and optimizing the rates of defoamer injection. This is important because of the high cost of the silicon based defoaming agent. Furthermore a different surfactant has been selected for the tests in the ACTS Flow Loop. After meetings with a foam chemical manufacture, it was decided to use a surfactant that produces a foam that is more easily broken. The selected surfactant is the F-450 distributed by Bachman Drilling & Production Specialties. This surfactant has fewer stabilizers and other additives. It is composed basically of a blend of C8-C10 hydrocarbons that form a non-polar chain of the surfactant molecule. Since this is a commonly available surfactant, it will serve as a good starting point for foam tests in the ACTS Flow Loop.

The defoamer injection pump was also tested and a pump curve for a specific stroke volume was developed. This pump will be manually operated, and the pump curve will help setting the defoaming agent's flow rate. Design of the injection system has also changed. The defoamer will now be injected at three different points upstream of the inlet to the foam breaking tower.

Finally, the defoamer tower has been pressure tested. The tests basically consist in pressurize the tower to assure its safety and reliability for the elevated pressure experiments. The first set of two 20-in gaskets were found to leak at about 500 psi. Hence, they were replaced by a new set, and subsequent tests found that the new gaskets could hold pressures up to 950 psig without any leaks..

New Instrumentation

Two more view ports will be installed in the 2 in and 3 in pipe sections. They will allow visualization of the flow of pressurized foam and provide direct information about the formation of water layers. For example, if there is excessive free water, then more surfactant will be added. In addition, these view ports may serve as the place of installation for optical devices to measure and characterize foam structure (e.g., average bubble size and bubble size distribution).

In addition, the selection and use of a gamma ray densitometer is being considered for measurement of foam density, and thereby allowing foam quality and flow rate to be calculated at the point of measurement.

Test Matrix and test procedure modifications

After further study and test planning, the initial test matrix has been modified and the new proposed set of experiments is shown in Table 7.1.

Table 7.1 – Modified Test Matrix

Pressure (psi)	**100**	**200**	**300**	**415**	**530**	**650**
Temperature (F)	**70**	**100**	**125**	**150**	**200**	
Qualities	**60**	**70**	**80**	**90**		
Flow rates	**3 different flow rates for each test**					
Pipe (in)	**2**	**3**	**4**			
Annulus (in)	**6 x 3,5**					

An updated test procedure will be released as soon as modifications concerning the process control system and installation of new valves are completed. However, a check list will be used daily before each test is. This check list will be added to as needed when the all of the components of the flow loop are in place and safety procedures are finalized. It is expected that improvements will be made as experienced is gained during the preliminary tests. A first draft of the check list is as shown:

1. Verify the presence of safety equipment:
    a. First aid box
    b. Check the emergency eye and body wash shower
    c. Hat, gloves, worker suit, boots.
2. Turn on the main power switch boxes
3. Turn on computer and controllers
4. Verify the status of all instruments on screen:
    a. Pressure indicators should display atmospheric pressure
    b. Temperature indicators should display almost uniform readings in all measured points. The temperature value may vary depending upon starting condition of the test
    c. Differential pressures indicators should display nil pressure.
    d. Flow meters indicators should display nil flow rate.
    e. Control valves' trim position indicators should display fully opened
    f. Foam breaking tower liquid level may vary depending upon starting condition of the test.
5. Verify the level of water tank, surfactant tank and defoaming agent tank
6. Verify compressor's fuel level
7. Verify the level of heat transfer oil in the boiler
8. Verify water in the chiller

9. Add corrosion inhibitor to the water to be used in the tests
10. Flush differential pressure transducers with water before each test
11. Drain all lines and equipment if necessary before and after the tests.
12. Calibrate all pressure transducers before each set of tests
13. Check the previous calibration under dynamic conditions (flowing test with pressure).
14. Document all calibration curves.
15. Verify and document any anomaly in the instruments and/or equipment
16. Document any modifications in the flow loop or test procedure.

Advances and new proposals in modeling the process of foam flow under elevated temperatures and pressures

In the last quarterly report, Jan 2001, modeling of the flow of a non-Newtonian compressible fluid in pipes was presented. The velocity profile was considered to vary in both radial and axial direction. Density was to be computed using an equation of state. The non-Newtonian behavior was introduced by the definition of a non-Newtonian viscosity and a power-law model was assumed as a constitutive equation. The resultant partial differential equation is complex by itself:

$$\frac{\partial P}{\partial z} = \eta\left(\frac{1}{r}\left(\frac{\partial vz}{\partial r}\right) + \left(\frac{\partial^2 vz}{\partial r^2}\right) + \frac{4}{3}\left(\frac{\partial^2 vz}{\partial z^2}\right)\right) - \rho v_z \frac{\partial vz}{\partial z} \qquad (1)$$

where

$$\eta = K\left(\frac{1}{2}\sqrt{\frac{8}{3}\left(\frac{\partial vz}{\partial z}\right)^2 + \left(\frac{\partial vz}{\partial r}\right)^2}\right)^{n-1} \qquad (2)$$

Unfortunately, it is clear that there is no obvious analytical solution for Eqn. 1,and the effects of quality, temperature and pressure on the non-Newtonian viscosity have to be introduced somehow. Also, upgrading the model to account for annular geometries is even more complicated.

Initially a finite difference method started to be implemented to solve the equation, but this numerical approach was interrupted. Mainly because of difficulties related to the selection of a numerical method itself and the complexity of the partial differential equation involved. Problems like numerical instabilities and the programming of the numerical mesh in a correct way could consume excessive time appear to be beyond what can be accomplished within the allotted time for this ACTS Task 9. Because of this, additional alternatives to solving the problem were proposed. In spite of the time limitations, the numerical methodology may still be considered, if it is deemed essential.

Actually, in the last report some alternatives were presented and were basically proposals based on modifications of recently published models like Gardiner et al.[1] and Valko and Economides[2].

Another interesting approach to the problem is to modify Reed's et al.[3] model for foam flow. One of the main advantages of applying the model is because it is valid for all flow regimes. A second advantage is that it was developed for Herschel-Buckley fluids, which is one of the more general rheological models available. H-B fluids can have both a yield stress and a shear-thinning power-law component. Since foams can present significant yield points depending on quality, it appears that this type of rheological model will be useful for modeling foam hydraulics. In addition, it make computations quite simple for pipe and annular geometry by the introduction of an "effective" diameter concept, a Generalized Reynolds number, and relatively simple correlations for annular geometries (Zamora et al[4]).

The transitional and turbulent flow regimes are solved by using the artifice of a so-called imaginary laminar velocity. It is defined as the velocity of a laminar flow that would create the same shear rate at the wall as the actual turbulent non-Newtonian flow. The model also accounts for the effects of wall roughness.

The effective diameter concept is based on the model derived by Dodge and Metzner[5] where a general constitutive equation is proposed for non-Newtonian fluids:

$$\tau_w = K'(\gamma_w)^N \tag{3}$$

Once an equation to compute N from the rheological parameters of the Yield Power-law fluids is available, an effective diameter can be calculated, and pressure drop computations can be performed. Equations 4 and 5 show the effective diameters for pipe and annular flow.

$$D_{eff} = \left(\frac{4N}{3N+1}\right) \cdot D \tag{4}$$

$$D_{eff} = \frac{Dh}{G} \tag{5}$$

The pressure drop for transitional and turbulent flow regimes are computed using the well known Colebrook equation by using a relative roughness and a generalized Reynolds number based on the effective diameter and an imaginary laminar velocity to compute the effective shear rate and the corresponding viscosity at the conduit walls.

A way to calculate the rheogical parameters or the effective viscosity as a function of quality at different temperatures and pressures has to be proposed in order to use the model. A dimensional analysis was carried out in order to incorporate the effects of quality and pressure on changes in foam structure. The analysis was done based on foam viscosity. The viscosity of foams can be written as a function of the following variables.

$$\eta = f(\tau_w, v, D, N, \Gamma, \phi, \psi) \tag{6}$$

Where ϕ is the average bubble size and ψ is a shape factor, bubble sphericity for example. Because the dimensional analysis is based on the premise that an equation describing a phenomenon must be dimensionally consistent, the relation expressed by Eqn. 6 can be written in terms of dimensionless groups:

$$f(\Pi_1, \Pi_2, \Pi_3, \Pi_4, ..., \Pi_n) = 0 \tag{7}$$

In our problem N, Γ and ψ are dimensionless and already represent three dimensionless groups. The result of dimension analysis gives the following dimensionless groups that forms the independent set of variables describing the foam viscosity:

$$\Pi_1 = \frac{\eta v}{\tau_w D} \tag{8}$$

$$\Pi_2 = \frac{\phi}{D} \tag{9}$$

Then the final dimensionless expression can be written as follows:

$$\Pi_1 = f(\Pi_2, \Pi_3, \Pi_4, \Pi_5) \tag{10}$$

where,

$$\Pi_3 = \psi \tag{11}$$

$$\Pi_4 = \Gamma \tag{12}$$

$$\Pi_5 = N \tag{13}$$

From the fluid mechanics theory, we know that the first dimensionless group can be rearranged and the following relation proposed for the evaluation of foam effective viscosity:

$$\eta = \left(\frac{\tau_w \cdot D_{eff}}{8v}\right) \cdot \Pi_2^{\,c} \cdot \Pi_3^{\,d} \cdot \Pi_4^{\,e} \tag{14}$$

where

$$D_{eff} = \left(\frac{4N}{3N+1}\right) \cdot D \tag{15}$$

The constants c, d and e have to be determined from the experiments. This approach is valid for laminar flow in pipes where the shear stress in Eon 14 is calculated from the rheological model. The annular flow can be modeled by using Deff from Eqn. 5. The turbulent flow regime can be solved by using the definition of the imaginary velocity, or directly from Eqn. 10 with an alternative equation to compute shear stress.

Experimental Verification of Flow Regime

It is mandatory to know in which flow regime you are when analyzing data from a specific experiment. Although we expect laminar flow during the experiments, because the low density and high effective viscosity of foam, a priori this is impossible to assure. Because of this, visualization of the flow and the friction factor will be used, as a reference, to determine flow regimes for the experiments.

One of the basic assumptions that we are making for the modeling of foam flow is that foam behaves like a homogeneous fluid. This is not true when the fluid structure is not uniformly composed. It varies with pressure, temperature, gas-liquid ratio, type of gas and liquid phase, type of surfactant, etc. Basically it is a thermodynamically unstable compressible fluid. As long as the bubbles that compose the fluid are much smaller than the flowing conduit, we can assume that bulk properties will represent the flow behavior. This is the situation we will face during experiments and, in this sense, are similar to real drilling operations.

The view ports that will be installed in the 2 in and 3 in pipe sections will provide the essential information about the flow regime, and later on, the experimental Fanning friction factor will confirm the trend. It is well known that the friction factor presents a linear relation with Reynolds number in the laminar regime for Newtonian or non-Newtonian fluids. The only detail required is the correct definition of Reynolds number for non-Newtonian foams. Experimental charts of friction factor versus Reynolds number will be plotted to evaluate the flow regime.

Slippage at the Wall

Several authors in different experimental work with foam have reported the existence of wall slip. The formation of a thin liquid layer at the wall makes foam

appear to slip at a solid boundary. This phenomenon leads to incorrect computations of shear rate at the wall and, subsequently, a wrong evaluation of rheological parameters. Results from a variety of experiments have revealed that slip at the wall is a function of shear stress, wall curvature and wall roughness.

Jastrzebski[6] proposed an approach to the problem after modifying Oldroyd's[7] model for non-Newtonian liquids. Actually, it is an experimental correction that evaluates the slip velocity as a function of a slip coefficient and wall shear stress.

$$\mathbf{vslip} = \frac{\beta c \tau_w}{D} \tag{16}$$

The observed flow rate incorporates the true flow rate due to foam itself and the component due to slip. Then the following expression can be written for the observed shear rate:

$$\gamma_w = \gamma_{w \cdot true} + \frac{8\beta c \tau_w}{D^2} \tag{17}$$

The slope of a plot of observed shear rate versus $8\tau_w$ / D^2 gives the slip coefficient. This method is widely used and represents an easy way to account for wall effect. However, some authors reported different trends for the dependence of the slip coefficient with wall shear stress. For example, Gardiner et al.[1] found the slip coefficient decreases with wall shear stress, while other authors claim the contrary. The effect of wall roughness is not clearly understood either. It is know that a rough surface tends to eliminate or reduce wall slip, and some authors claim that it is a function of the ratio of the absolute roughness (ε) and average bubble size. All these effects are under investigation with the objective of better understanding these phenomena and possibly generate a more adequate method for slip velocity computation in pipes and annuli.

Temperature Effects

Few authors investigated the effects of temperatures on the macroflow of foam. Among them we can cite Harris and Reidenbach[8], Cawiezel[9], Bonilla[10], Valko and Economides[2]. Most of the previous experimental work did not present a model for prediction or correction of temperature effects. Harris and Reidenbach[8] proposed the following correlation to account for temperature effects on the rheological parameters of a yield power law fluid:

$$n_t = n_{75} e^{(0.0028 - 0.0019\Gamma)(T - 75)} \tag{18}$$

$$k_t = K_{75} e^{(C \cdot \Gamma - 0.018)(T - 75)} \tag{19}$$

where C is defined by:

$$C = e^{-(3.1 + 3n_{75})} \tag{20}$$

The yield point was considered as a function only of quality.

The other authors could not find any reasonable relations between temperature and rheological parameters. Hence, this gives an idea of the complexity of the problem. At this point, some preliminary ideas on how to treat the problem are proposed. Because we are considering foam as a homogeneous fluid, we can use some approaches described by Bird et al.[11]. The empirical method is called the "method of reduced variables". It consists in calculating the viscosity of a fluid at an arbitrary temperature based on a known viscosity at some reference temperature. It is a two-step procedure for generation of a master curve of viscosity versus shear rate:

1. The curve at temperature T is first shifted vertically upward by an amount of $\mathrm{Log}(\eta_o(T_o)/\ \eta_o(T))$, where η_o is the zero shear rate viscosity.

2. The resultant curve is then shifted horizontally in such way that any overlapping regions of To-curve and shifted T-curve are superimposed. The amount by which $\eta(\gamma,T)$ must be translated in order to achieve superposition is defined as log a_T. Often it is found that this shift factor for concentrated polymeric solutions is:

$$\mathbf{a_T = \frac{\eta_o(T) T_o \rho_o}{\eta_o(T_o) T \rho}} \tag{21}$$

During foam experiments, the method must be applied directly to wall shear stress since the zero viscosity information is not available. Therefore, we can define a reduced shear stress as follows:

$$\mathbf{\tau_{w_r}(\gamma, T_o) = \tau_w(\gamma, T) \frac{T_o \rho_o}{T \rho}} \tag{22}$$

Then the wall shear stress can be shifted without knowing a_T and the horizontal shifting of different $\tau_w(\gamma, T_o)$ curves will give the master curve $\tau_{w\,r}(\gamma_r, T_o)$.

An "Arrhenius dependence" of the factor a_T with temperature is often found:

$$a_T = \exp\left(\frac{\Delta \tilde{H}}{R}\left(\frac{1}{T} - \frac{1}{T_0}\right)\right) \tag{23}$$

The values of ΔH / R varies from 2.83 x 10^3 K to 5.14x10^3 K for polymeric solutions.

Additional Comments about Pressure Effects

As discussed several times, pressure is an extremely important variable to be considered in foam flow. Foams with the same quality can present different effective viscosities at different pressures. In fact, authors like Harris[12] and Predomme[13] concluded that pressure and surfactant concentration in the liquid phase influence foam texture and is responsible for changes in flow behavior.

Although it seems that structural parameters should be used for modeling purposes, pressure itself may be used as an indirect correlation variable in the absence of devices to measure actual foam texture. It includes the advantage of dealing with a much more common and easily measured variable. This is one of optional approaches, and dimensional analysis has been used to help solve the problem.

Because foam behaves like a shear thinning fluid, we may apply concepts from previous work that has been done on this phenomenon in incompressible pseudoplastic polymeric solutions. Fried[14] proposed the following relationship for the dependence of viscosity on pressure:

$$\mathrm{Ln}\left(\frac{\eta}{\eta_r}\right) = \beta(p - p_r) \tag{24}$$

where β is a pressure coefficient that can vary from 0.6 to 3.4x10^{-4} psi in polymeric solutions.

Computer Programs

One of the natural objectives of modern modeling work is to generate, whenever possible, practical tools to help with computations of the variables of interest. With this objective, visual basic programs, that can be ran within an excel spreadsheet, have been developed for to help optimize the modeling process. At this moment, Reed's model has already been programmed in Visual Basic 6.0 and computes frictional pressure losses for laminar flow, transitional and fully-turbulent flow in pipes and concentric annuli. Reidenbach's[15] model and two models based on the volume equalized principle proposed by Valko and Economides[2] and Gardiner et al.[1]

In addition, a spreadsheet for rheological characterization and data treatment has been programmed. Most of the features are already implemented and it will basically compute rheological parameters and make corrections for slip and temperature effects based upon raw data like pressure drop and flow rates. Clearly it will also serve as a data source for correlation purposes using dimensional analysis.

Nomeclature:

P -pressure
ρ -fluid density
r -radial direction in cylindrical coordinates
z - axial direction in cylindrical coordinates
v_r **-** fluid velocity in radial direction
v_z **-** fluid velocity in axial direction
D – diameter
t – time
T - temperature
η **-** non-Newtonian viscosity
Δ - rate of deformation tensor
τ_{rz} - shear stress on r face in z-direction
τ_{zz} **-** normal stress in z-direction
τ_w **–** wall shear stress
γ - shear rate
ΔH – activation energy for flow
R- universal gas constant
K – consistency index
n- fluid behavior index
N- Generalized fluid behavior index
β_c – slip coefficient
vslip – slip velocity
β - constant
a_T **-** shift factor
Γ - quality
ψ - bubble sphericity
ϕ - average bubble size
G – dimensionless function of N and geometry**.**

Subscripts:

o – known reference state
r – reduced
w – wall
75 – at 75°F

REFERENCES

1. Gardiner B.S., Dlugogorski B.Z., Jameson G.J., “Rheology of Fire-Fighting Foams”, Fire Safety Journal, 1998.
2. Valko P., Economides M.J., “Volume Equalized Constitutive Equations for Foamed Polymer Solutions”, Journal of Rheology, August 1992.
3. Reed, T.D.; Pilehvari A.A., “ A New Model for Laminar, Transitional, and Turbulent Flow of Drilling Muds”, SPE 25456, 1993.
4. Zamora, M.; Lord, D.L., “Practical Analysis of Drilling Mud Flow in Pipes and Annuli”, SPE 4976, 1974.
5. Metzner, A.B.; Reed, J.C., “ Flow of Non-Newtonian Fluids – Correlation of the Laminar, Transitional, and Turbulent- flow Regions”, A.I.Ch.E Journal, page 434 to 440, Dec. 1955.
6. Jastrzebski, Z.D., “ Entrance Effects and Wall Effects in an Extrusion Rheometer During the Flow of Concentrated Suspensions”, Ind. Eng. Chem. Res., p. 445 to 454, vol 6, 1967.
7. Oldroyd, J.G., “ The Interpretation of Observed Pressure Gradients in Laminar Flow of Non-Newtonian Liquids Through Tubes”, Courtaulds, Limited, Research Lab., Maidenhead, England, 1948.
8. Harris P.C., Reidenbach V.G, “High-Temperature Rheological Study of Foam Fracturing Fluid”, SPE 13177, 1987.
9. Cawiezel K.E., Niles T.D., “Rheological Properties of Foam Fracturing Fluids Under Downhole Conditions”, SPE 16191, 1987.
10. L.F. Bonilla, Subhash N. Shah, “ Experimental Investigation on the Rheology of Foams”, SPE 59752, 2000.
11. Bird, B.R.; Armstrong, C.R.; Hassager, O.; “Dynamics of Polymeric Liquids”, John Willey and Sons, 1987.
12. Harris P.C., “Effect of Texture on Rheology of Foam Fracturing Fluids”, SPE 14257, 1985.
13. Pred’homme, R., Khan, S.,”Experimental Results in Foam Rheology”, Chap. 4 in FOAMS: Theory, Measurements, and Applications, R. Pred’homme and S. Khan eds, Marcel Dekker, New York,1996.
14. Fried, R. J.; “ Polymer Science and Technology”, Prentice Hall PTR, 1995.
15. Reidenbach V.G., Harris P.C., Lee Y.N., Lord D.L., “Rheological Study of Foam Fracturing Fluid Using Nitrogen and Carbon Dioxide”, SPE 12026, 1983.

8. STUDY OF CUTTINGS TRANSPORT WITH AERATED MUD UNDER ELEVATED PRESSURE AND TEMPERATURE CONDITIONS (Task 10)

Investigator: Lei Zhou (Ph.D. Candidate)

8.1 Objectives (Preliminary)

This study has the following objectives:

1. Develop flow pattern maps for aerated fluids (two-phase flow) flowing under elevated pressure and temperature conditions inside horizontal annuli without pipe rotation.

2. Determine experimentally the cuttings transport ability of aerated fluids under elevated pressure and temperature conditions.

3. Determine the optimum gas/liquid flow rates for cuttings transport.

4. Develop a computational tool to calculate pressure losses for aerated fluids flowing under elevated pressure and high temperature conditions.

Past Work

1. Literature review on cuttings transport and hole cleaning.

2. Literature review on drilling fluid Rheology.

3. Literature review on two-phase flow in pipes and annuli.

4. Theoretical study of two-phase flow and slurry flow mechanics; Theoretical study of drilling fluid Rheology.

Present Work

1. Literature search on cuttings transport and hole cleaning is being conducted.

2. An analysis of three-layer hydraulics model for cuttings transport in horizontal wells is being conducted.

3. Modeling includes a layered model for air-liquid-cuttings (three-phase flow); first step is to consider stratified flow).

4. Developing a two-phase flow pattern prediction program using Visual Basic 6.0 without consideration of elevated pressure and temperature; these variables will be included later.

Literature Review On Layered Models For Cuttings Transport

Nguyen[1] and Rahman presented a mathematical model to predict various modes of cuttings transport for highly deviated to horizontal annuli. Their model was based on a 3-layer model, with the layers including a bed of particle with uniform concentration, a dispersed layer in which particle concentration varies, and a fluid-flow layer which could be a clear fluid or a turbulent slurry suspension. Interactions between the layers follow the treatment presented by Doron and Barnea for flow in slurry pipelines.

Kamp[2] and Rivero provided a 2-layer model for steady-state cuttings transport in highly inclined wells. The two layers were homogenous suspension above, and a stationary bed below. Movement of the bed was influenced by interfacial shear stresses exerted on it by the flowing suspension. The model predicted deposit bed height as a function of mud rate, cuttings diameter, mud viscosity, pipe eccentricity, etc.

Matin[3] et al. set up a 2-layer model to analyze cuttings transport. Their model is different from others since they considered the mass and momentum balance equation are unsteady. The effects of wellbore instabilities were accounted for in their model. A finite element approach, with a staggered mesh for the velocity and pressure, was used to solve the system of four differential equations.

Hyun[4] Cho et al. developed a three-segment hydraulic model for cuttings transport in horizontal and deviated wells. They assumed a stationary bed of drilled cuttings at the bottom, a moving bed layer above it and a heterogeneous suspension layer at the top. They modeled three segments to deal with well deviation: horizontal segment (60-90° deviation), transient segment (30-60° deviation) and vertical segment (0-30° deviation). For every segment they set up continuity equation and momentum equation. They analyzed the interface interaction by following the Doron, et al.'s correlation. They reported the effects of annular velocity, fluid Rheology, and hole angle on cuttings transport.

Doan[5] et al. presented a 2-layer model to simulate the transient movement of cuttings in an annulus of arbitrary eccentricity. The formulation allowed for a fluid and solid component in the suspension layer and allowed each to have different velocities, rather than assume a single velocity for the suspension. This approach enables the simulation a wide range of multiphase transport processes, including those in which significant slippage between phases may occur. On the other hand, it requires accurate description of the interactions between the different phases.

Layered Model For Three-Phase Flow In Annuli (Stratified Flow)

A layered model based on mass conservation law and momentum equation is developed to simulate a four-layered flow simultaneously in annuli, i.e., a

stationary bed at the bottom, a homogenous dispersed and moving cuttings layer above the stationary bed, above the cuttings a clear liquid layer, and a gas layer at the top.

Model hypotheses

The following simplifying hypotheses are used in development of an initial model.

1. The flow pattern in annular is steady state and liquid and cuttings are incompressible.
2. Cutting size and distribution in the stationary bed and moving layer are assumed uniform.
3. Liquid density and rheological properties are assumed constant.
4. The effects of rotation of an inner pipe is not considered.
5. There is no slip between the solid and liquid at the moving cuttings layer.

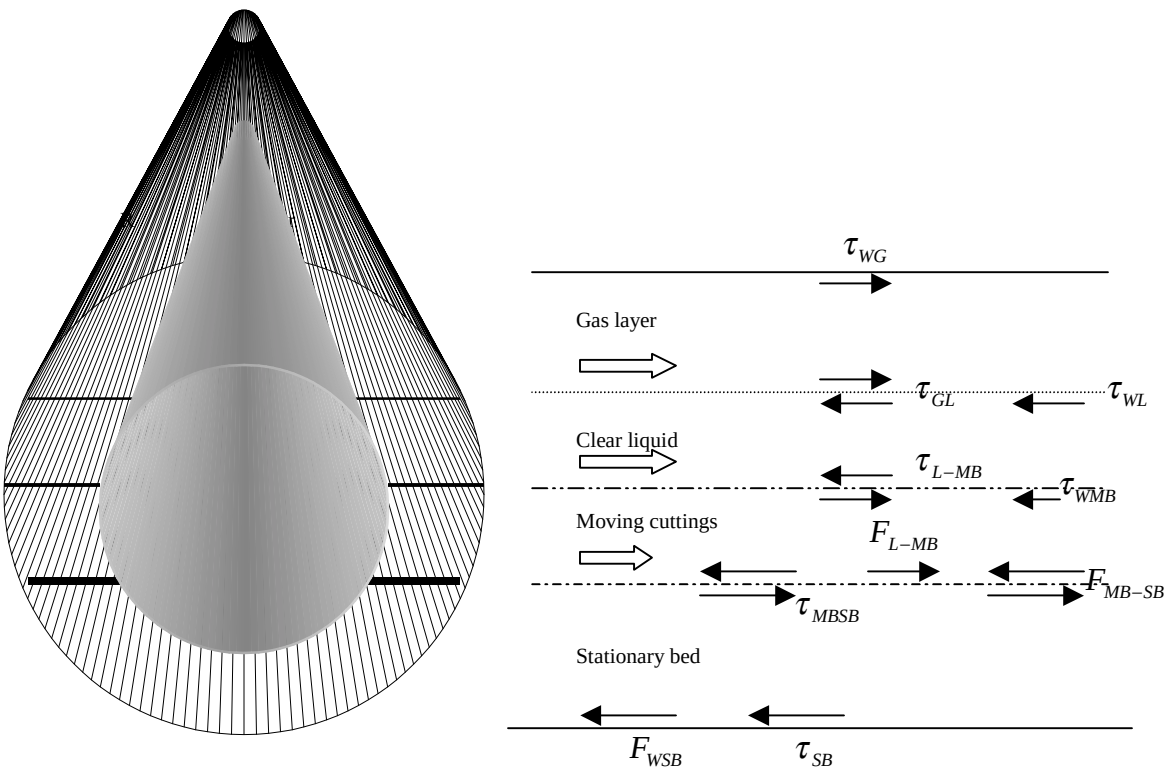

Fig. 8.1 Schematic Diagram of Layered Model for Horizontal Annulus

Assume cuttings dispersed in the moving cutting layer are homogenous. And a negligible amount of cuttings are in the layer of clear liquid.

Momentum equations

Gas layer

$$A_G \frac{dp}{dl} = \tau_{GL} S_{GL} + \tau_{GWD} S_{GD} + \tau_{GWd} S_{GWd} \qquad \text{……(1)}$$

Where the subscribes G refers to gas, GL refers to the gas/liquid interface, W refer to pipe wall, WD refers to the inside wall of the larger pipe, Wd refer to the outside wall of the smaller inner pipe. For example, τ_{WGD} refer to gas shear stress at the inside wall of the outer pipe.

Clear liquid layer

$$A_L \frac{dp}{dl} = -\tau_{GL} S_{GL} + \tau_{LWD} S_{LD} + \tau_{LWd} S_{Ld} + \tau_{L-MB} S_{L-MB} \qquad \text{……(2)}$$

where L-MB refer to the interface between the liquid layer and moving cuttings.

Moving cuttings layer

$$A_{MB} \frac{dp}{dl} = -\tau_{L-MB} S_{L-MB} + \tau_{MBWD} S_{MBD} + \tau_{MBWd} S_{MBd} - \frac{F_{L-MB}}{\Delta l} + \frac{F_{MB-SB}}{\Delta l} + \tau_{MBSB} S_{MBSB} \qquad \text{…(3)}$$

where MB-SB refer to interface between the moving cuttings layer and the stationary bed.

Stationary bed

$$A_{SB} \frac{\Delta p}{\Delta l} = \frac{F_{WSB}}{\Delta l} + \tau_{SBD} S_{SBD} + \tau_{SBd} S_{SBd} - \frac{F_{MB-SB}}{\Delta l} + \tau_{MBSB} S_{MBSB} \qquad \text{……(4)}$$

Continuity equations

Solid Phase

$$A_{MB} C_{MB} V_{MB} = A_a C_S V_S \qquad \text{……(5)}$$

where C_{MB} refers to cuttings mass concentration in the moving cuttings layer, and C_s refers to cuttings concentration in the input slurry (total flow of fluids plus solids produced by a given drilling rate).

Liquid Phase

$$A_{MB}(1 - C_{MB}) V_{MB} + A_L V_L + A_{SB}(1 - C_{SB}) A_{SB} = A_a (1 - C_S) V_S \qquad \text{……(6)}$$

Gas Phase

$$A_G V_G = A_a (1 - C_S - C_L) V_S \qquad \text{.....(7)}$$

Inter-phase force analysis

1. gas and clear liquid layer

$$\tau_{GF} = \frac{f_{GF}}{2} \rho_G (V_G - V_{GL})^2$$

Assume $f_{GL} = f_{G,} \quad V_G >> V_{GL}$

$$\tau_{GF} = \tau_{WGD}$$

2. Clear liquid layer and moving cuttings layer

$$\tau_{L-MB} = \frac{f_{L-MB}}{2} \rho_L \left(V_L^2 - V_{MB}^2 \right)$$

For the friction factor between these two layers, Martin, A. L. described in SPE 36075, "Experimental determination of interfacial friction factor in horizontal drilling with a bed of cuttings".

$$f_{L-MB} = m N_{\mathrm{Re}'_f}^{p} n^q \left(\frac{d_p}{d_h} \right)$$

According to Martin, m =0.966368, P =-1.07116, q =2.360211, and t =-2.34539
d_h is the hydraulic diameter.

3. Moving cuttings layer and stationary bed

$$\tau_{MBSB} = \frac{1}{2} \rho_{MB} V_{MB}^2 f_{MBSB}$$

The following correlation developed by Doron et al.[6] is used to calculate the turbulent friction factor for the moving cuttings layer.

$$f_{MBSB} = 0.046 N_{\mathrm{Re}'_f}^{-0.02}$$

Where the Reynolds of the moving cuttings layer is used.

Next, a force analysis for a single particle is described.

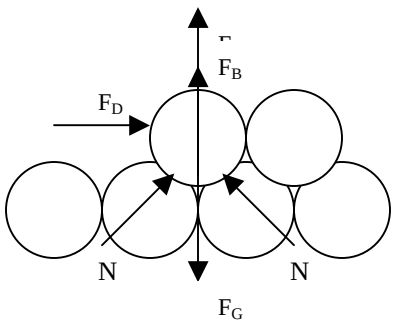

Gravitational force

$$F_G = \frac{1}{6} g_c \rho_S \pi d_P^3 \qquad \text{…….(8)}$$

Drag force

$$F_D = \frac{1}{8} C_D \rho_L V_P (\pi d_p^2) \qquad \text{…….(9)}$$

Buoyancy force

$$F_B = \frac{1}{6} g_c \rho_L \pi d_P^3 \qquad \text{…….(10)}$$

Lifting force

$$F_L = \frac{1}{2} \rho_L V_{MB}^2 C_L A_P \qquad \text{…….(11)}$$

The particle terminal setting velocity is a function of drag coefficient as well as particle Reynolds number. A trial and error iteration is needed to calculate the V_p. The following correlation is used to calculate setting velocity.

$$V_p^2 + 0.45 \exp(5\varphi)\left(\frac{\mu}{d_p \rho_L}\right) V_P - 19.45 \exp(5\varphi) d_p \left(\frac{\rho_s}{\rho_l} - 1\right) = 0 \qquad \text{…….(12)}$$

Considering the moment that particle has just carried up, a support force N must be zero.

By torque balance

$$F_D L_D + (F_B + F_L) L_N - F_G L_N = 0 \qquad \text{…….(13)}$$

Substitute equations (8)-(12) to equation (13):

$$\frac{1}{2}\rho_L V_{MB}^2 C_D\left[\frac{1}{4}\pi d_P^2-\frac{1}{8}d_P^2\left(\frac{\pi}{3}-\sin\frac{\pi}{3}\right)\left(\frac{d_P}{2}\cos\frac{\pi}{6}\right)\right]+\frac{1}{2}\rho_L V_{MB}^2 C_L\left(\frac{1}{4}\pi d_P^2\right)\frac{d_P}{2}\sin\frac{\pi}{6}-$$
$$\frac{1}{6}\pi\rho_L g d_P^3\left[C_{MB}\frac{y_{MB}}{d_P}+(1-C_{MB})\right]\frac{d_P}{2}\sin\frac{\pi}{6}+\frac{1}{6}\pi\rho_S g d_P^3\left[C_{MB}\frac{y_{MB}}{d_P}+(1-C_{MB})\right]\frac{d_P}{2}\sin\frac{\pi}{6}=0$$

……..(14)

Equation (14) can be solved to get V_{MB}

$$V_{MB}=\sqrt{\frac{0.1309(\rho_S-\rho_L)gd_P\left[C_{MB}\frac{y_{MB}}{d_P}+(1-C_{MB})\right]}{\rho_L(0.16515\,C_D+0.0982\,C_L)}}$$ ……(15)

Where C_D, C_L are drag coefficient and lifting coefficient respectively. Y_{MB} is height of moving cuttings layer.

Fig 8.2 - Annular Geometry Analysis

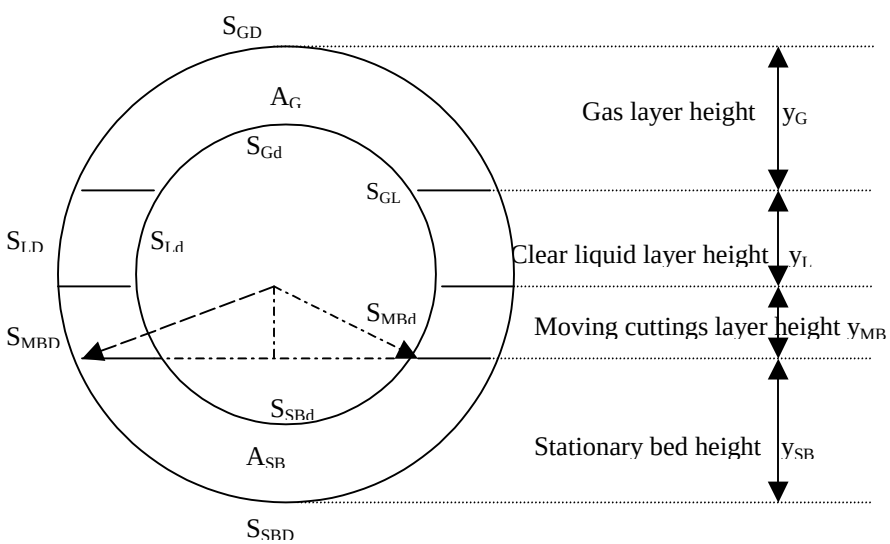

An annular geometry analysis is conducted to relate the wetted perimeter of every layer and area of every layer to stationary bed height y_{MB}, moving cuttings layer height y_{MB}, and clear liquid layer height y_L.

At this point, we need to determinate the interfacial force. Some research on interface analysis has been done experimentally and theoretically. The best way to calculate the inter-phase interaction is under investigation.

FUTURE WORK

Literature survey on two-phase flow, drilling fluid Rheology and cuttings transport in pipes and annuli will continue. Experiments will be planned to investigate the flow behavior of aerated-fluids and their cuttings transport capabilities under elevated temperatures and pressures. Efforts will continue to develop a computer simulator for prediction of two-phase flow patterns and a layered model of cuttings transport. The usefulness of layered models will also be examined for slug-flow conditions.

Reference:

1. Nguyen, D. and Rahman, S.S .:" A Three-layer Hydraulic Program for Effective Cuttings Transport and Hole Cleaning In The Highly Deviated And Horizontal Well," SPE D&C September 23-26, 1990
2. Kamp, A.M. and M.Rivero.: "Layer Modeling for Cuttings Transport in Highly Inclined Wellbores," SPE 53942, Proc. of 1999 SPE Latin American and Caribbean Petroleum Engineering Conference, Caracas, Venezuela, April 21-23, 1999.
3. Martins, A.L., M.L. Santana, W.Campos and E.F. Gaspar.:" Evaluating the Transport of Solids Generated by Shale Instabilities in ERW Drilling," SPE Drilling and Completion, Dec. 1999, pp.254-259.
4. Hyun cho, Subhash, N.shah and Samuel O. Osisanya.:" A Three-segment Hydraulic Model for Cuttings Transport in Horizontal and Deviated Wells," SPE 65488.
5. Doan,Q., M.Oguztoreli, Y.Masuda, T. Yonezawa, A.kobayashi and A.Kamp.:" Modeling of Transient Cuttings Transport in Unbalanced Drilling," IADC/SPE 62742, to be presented at the 2000 IADC/SPE Asia pacific drilling technology held in kuala Lumpur, Malaysia September 11-13/2000.
6. Doron, P. and Barnea, D. :" A Three-layer Model for Solid–Liquid Flow in Horizontal Pipes," International Journal of Multiphase Flow, Vol.19, No.6, 1993,p.1029-1043

9. DEVELOPMENT OF CUTTINGS MONITORING METHODOLOGY (Task 11)

Investigators: Kaveh Ashenayi and Gerald Kane (Profs Electrical Engr.)

9.1 Objectives

The ultimate objective of this task (Task 11) is to develop a non-invasive technique for quantitatively determining the location of cuttings in the drill pipe. There are four different techniques that could be examined. However, as it was pointed out in the previous reports only three have good potential for success. These are Ultrasound, X-Ray/ -Ray and Optical. Of these, we will concentrate on Ultrasound as the primary approach for Task 11, and X-Ray/ -Ray will only be used if the first one is not successful.

9.2 Team Composition

The instrumentation team consists of Dr. Gerald R. Kane and Dr. Kaveh Ashenayi both registered professional engineers and professors of Electrical Engineering Department at the University of Tulsa. MS level graduate students are assisting them. These students have BS degrees in EE and CS. This particular combination works well because successful completion of this project requires skills from both disciplines. In order to achieve the objectives of this task, we will need to develop a very complicated electronic hardware/sensor and a software package that correctly interprets the data received.

9.3 Progress to Date

An ultrasonic sensor (Massa model TRW 2445/210) has been tested in the static case of fine gravel suspended in a concentrated solution of XCD polymer. The digital readout from the sensor clearly shows different readings for different concentrations of solids. Additional sensors have been ordered. The next step is to develop a correlation and/or calibration procedure that relates sensor readings to concentration of solids for a variety of fluids and at different locations within a pipe. In addition, tests will be conducted in both plastic and metal pipes to determine the effects of conduit materials on sensor outputs and their interpretation. Once this is accomplished, the behavior of the sensors within an annular space will be investigated.

10. DEVELOPMENT OF A METHOD FOR CHARACTERIZING BUBBLES IN ENERGIZED FLUIDS (TASK 12)

Investigator: Leonard Volk (ACTS Research Associate)

10.1 Introduction

Bubbles (as foam or aerated fluid) will be moving at a high rate (up to 6 ft/sec) in the drilling section of the ACTF, and may be very small (down to 0.01 mm). The bubble size and size distribution are known to influence the fluid rheology and the ability of the fluid to transport cuttings. Bubbles in a shear field (a flowing stream) may tend to be ellipsoidal which might alter both the rheology and transport characteristics. This project is divided into three subtasks:

- Subtask 12.1. Develop/test a microphotographic method for static conditions
- Subtask 12.2. Develop/test a method for dynamic conditions
- Subtask 12.3. Install the foam bubble size and distribution monitoring system on the full-size ACTS Flow Loop.

Subtask 12.1 includes: (1) magnifying and capturing bubble images, (2) measuring bubble sizes and shapes, and (3) calculating the size distribution and various statistical parameters.

Subtask 12.2 develops the methods needed to apply the results of Subtask 12.1 to rapidly moving fluids, especially a method for “freezing” the motion of the bubbles. A dynamic testing facility is being developed in conjunction with Task 11 for development and verification. The techniques developed under Subtask 12.2 will be applied to the annular drilling section of the ACTF in Subtask 12.3.

10.2 Objective

The objective of this task is to develop the methodology and apparatus needed to measure the bubble size, size distribution and shape during cuttings transport experiments.

10.3 Project Status

10.3.1 Static Bubble Characterization

New Techniques. In an effort to measure foam properties, new (to us) and inexpensive methods are being continually sought and developed. Various electronic and optical components have been received to verify possible methods of measuring foam quality and average bubble size.

10.3.2 Dynamic Bubble Characterization

10.3.2.1 Dynamic Imaging

Light Source. We have received the remainder of the order (the power supply and lamp housing) for the μs pulsed flash lamp.

Imaging. We are evaluating a CCD and software package. This CCD provides a series of pulses (30/s) to trigger the xenon flash lamp. We may need to construct a circuit to select pulses from this string to trigger the flash lamp less frequently (a few to several seconds between flashes).

10.3.2.2 Dynamic Testing Facility

Considerable time has been spent this quarter on design and construction of the Dynamic Testing Facility so that both dynamic bubble characterization and cuttings tomography (Task 11) can be developed. Figure 10.1 shows an updated schematic of the DTF. The pulsation dampener and system relief valve (R2) are the only two “major” pieces that need to be installed to complete the system. Several auxiliary systems are currently being designed and assembled (PVC piping to move fluid to and from the waste tank, reservoir tank and corrosion inhibitor tank, steel relief system piping, and the mixer support for the reservoir tank.

10.5 Planned Activities

10.5.1 Static Bubble Characterization

- Acquire software needed for bubble analysis.
- Construct/verify methods for measuring foam quality and average bubble size

10.5.2 Dynamic Bubble Characterization

- Select and purchase a CCD camera.
- Complete construction of the Dynamic Testing Facility.

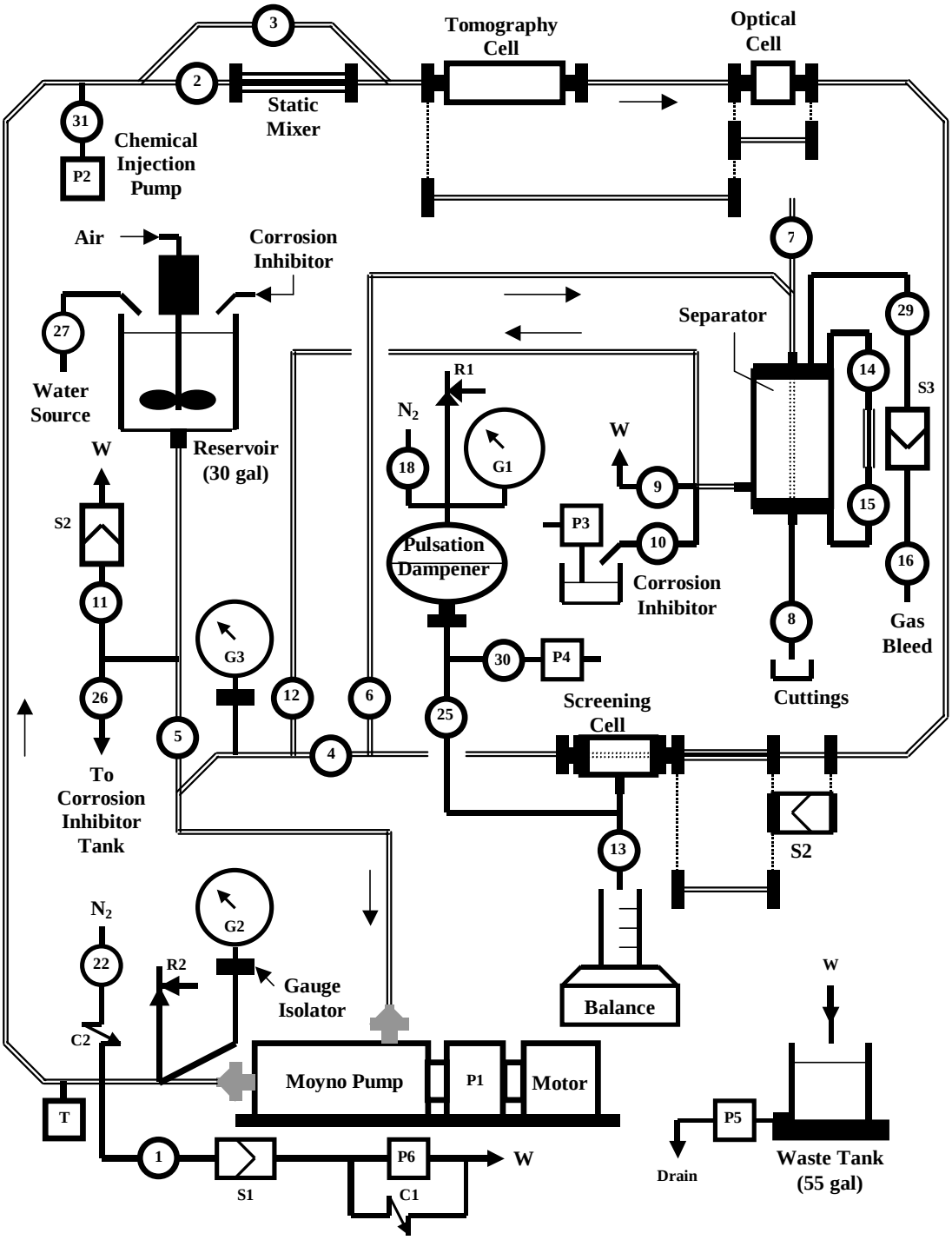

Figure 10.1a. Schematic of Dynamic Testing Facility – April 2001

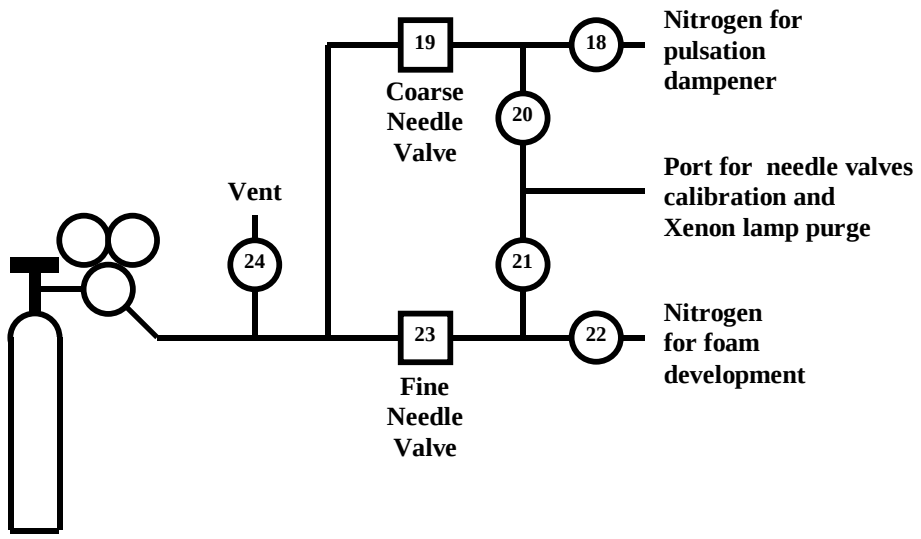

Figure 10.1b. Nitrogen gas manifold for Dynamic Testing Facility – April 2001

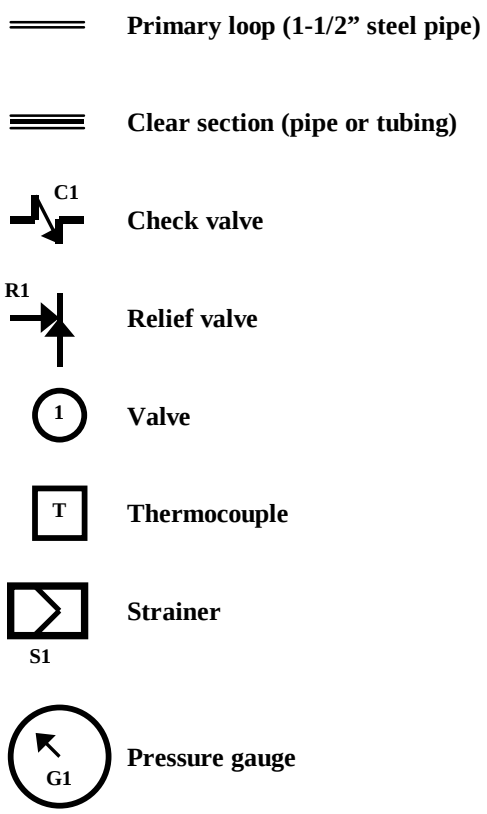

Figure 10.1c. Key for figures 10.1a and 10.1b – April 2001

12. SAFETY PROGRAM (TASK 1S)

Chairman, Process Hazards Review Team: Leonard Volk (ACTS R.A.)

12.1 Introduction

This project was initiated during the fourth quarter of 2000 to assess the hazards associated with the Advanced Cuttings Transport Facility (ACTF) and develop an Action Plan to address problems discovered during this Hazards Review. A Hazards Review is an industry accepted method used to improve the overall safety characteristics and reduce the possibilities of accidents in the work place. Each individual component of the ACTF will be examined as to the effect and consequences on safety, health, and the environment, of the component in all possible operational modes. A Hazards Review can result in:

- Equipment modification
- Inspection and testing
- Documentation
- Personal protective equipment
- Personnel training
- Emergency training

Review Process. The review process begins by selecting a method. Next a team of qualified individuals must be formed. This team should include those knowledgeable in the review process and those familiar with the process to be reviewed. Prior to beginning the review, all available documentation needs to be gathered. This will include schematics, organized training, results of periodic inspections and testing, design and construction documents, operating procedures, etc. Once the schematics have been verified and the operator of the equipment or process has reviewed its operation with the team, the Hazards Review begins. The review should continue uninterrupted until completed. After the findings and recommendations have been completed, a draft report is issued and reviewed by all team members, and the operator of the process or equipment. Following this review, any changes are incorporated and a final report issued. This completes the Hazard Review process. The operator then needs to develop an action plan to implement the recommendations from the Hazard Review. In our case, team members will participate in developing this plan.

12.2 Objective

The objective of this task is to identify problems (findings) that might result in injury, property damage or the release of environmentally damaging materials and provide recommendations to minimize them, and to develop an action plan based on these recommendations.

12.3 Project Status

The Work Team held their initial meeting February 23, 2001. Mark Pickell, ACTS Project Engineer, used existing schematics to lead the team through

the operation of the facility. It became apparent that we needed an updated schematic. The Team also expressed the need for a list of valves, their type and pressure rating as well as information on relief devices. Weather prevented an on-site walk through. For review purposes, the ACTF has been broken into the following subsystems:

- ACTF Flow Loop (Figure 12.1a and b)
- Diesel Tank (Figure 12.1c)
- Surge Tank (Figure 12.1d)
- Heater

Although the heater and surge tank are purchased equipment, external valves and other hardware can be accessed and therefore need to be included in the review process. Except for the heater subsystem, all schematics have been completed and are given in Figures 12.a through 12.d. Since construction continues on the ACTF Flow Loop subsystem, this schematic is being continually updated. All components (shut-off valves, relief valves, gauges, flow meters, check valves and pumps) on these schematics have been identified and numbered. Numerous safety and operational improvements have already been identified and are underway. Permanent brass tags have been attached to some components (shut-off valves, relief valves and check valves) to aid in identification.

The next meeting of the Hazard Review Work Team is scheduled for April 30 with May 2 as a backup date if needed. Table 12.1 gives an updated membership for the Review Team and Work Team.

Table 12.1 Review Team and Work Team Members

NAME	REVIEW TEAM	WORK TEAM	AFFILIATION
Leonard Volk	X	X	Chairman (TU)
John Ford	X	X	Nat'l Petroleum Tech. Office (US DOE)
Don Harris	X	X	Microelectronics Technician (TU)
Dave Hensley	X	X	Consultant (Tulsa Tech. Center)
Stefan Miska	X		ACTS Co-PI (TU)
Mark Pickell	X		ACTS Project Engineer (TU)
Troy Reed	X		ACTS PI (TU)
Jim Sorem	X		Sr. Assoc. Dean of Engineering (TU)
Laurie St. Clair	X	X	Dir. Environmental, Health & Safety (TU)
Nicholas Takach			ACTS Co-PI (TU)
Mike Volk	X	X	Mgr. Research & Tech. Dev. (TU)

12.4 Planned Activities

- Complete Hazards Review
- Write draft report of Hazards Review
- Present draft report to Review Team
- Modify draft report to incorporate revisions
- Develop an Action Plan based on recommendations in Hazards Review report
- Submit Hazards Review report and Action Plan to ACTF Advisory Board Members for their input.

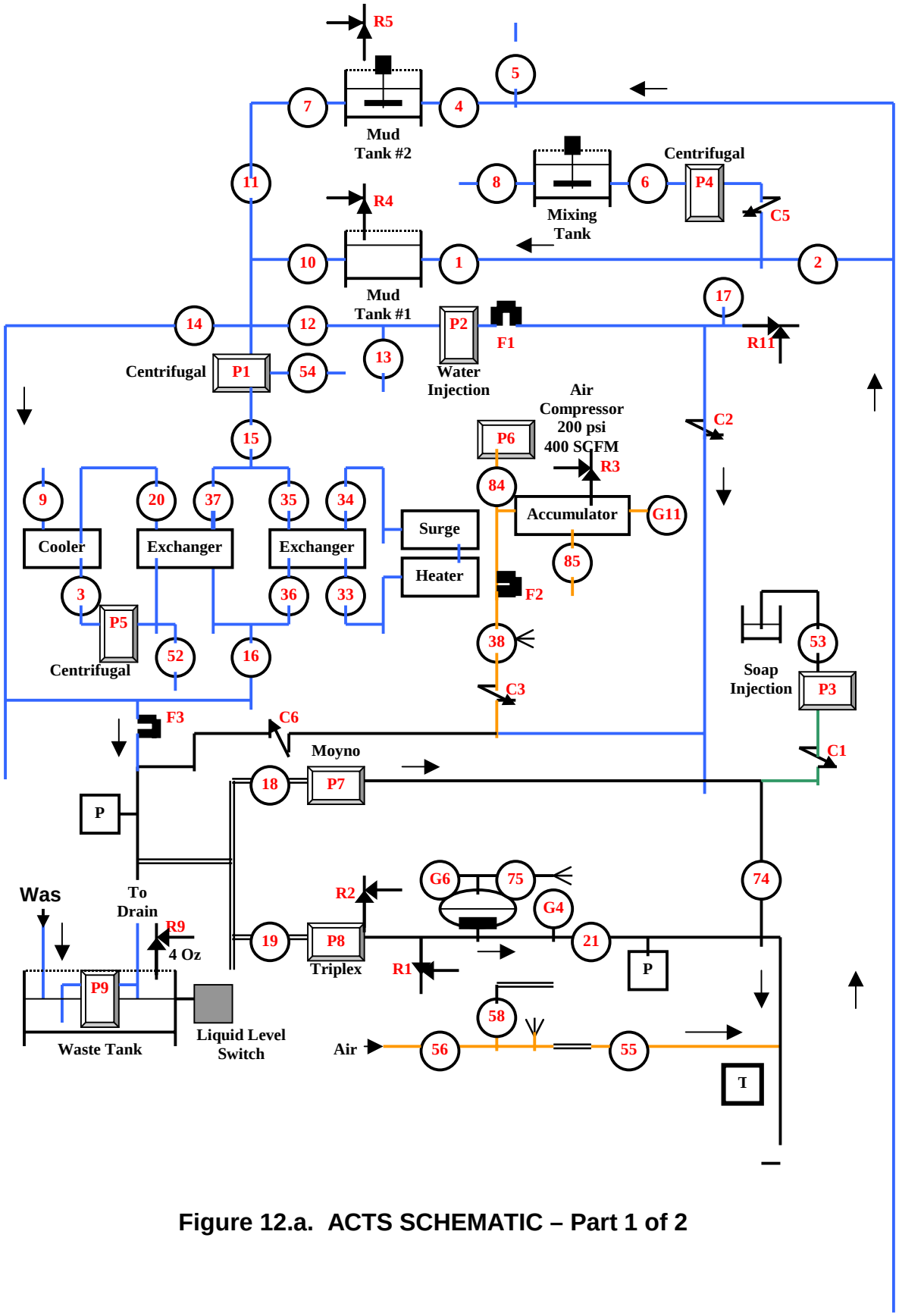

Figure 12.a. ACTS SCHEMATIC – Part 1 of 2

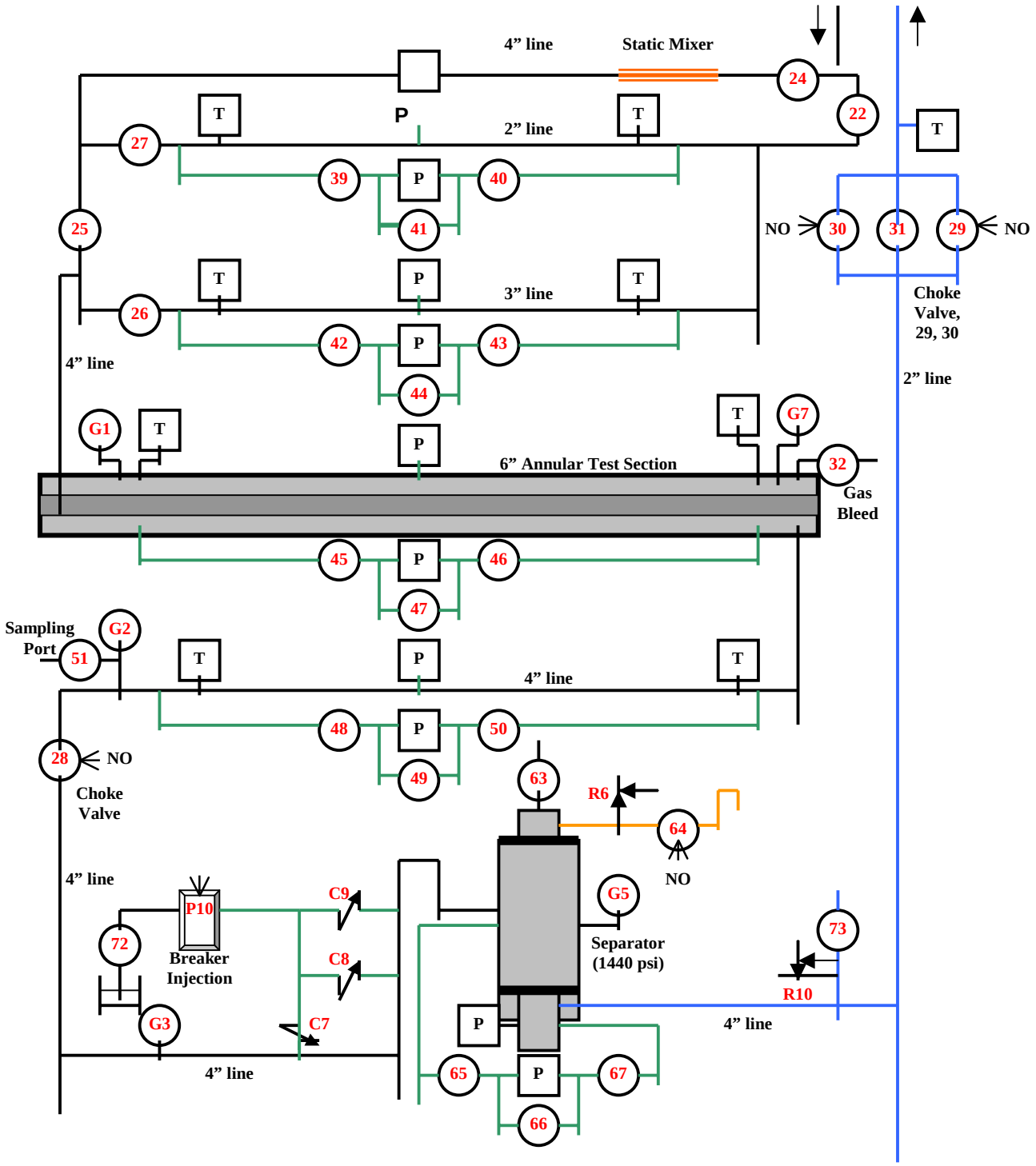

Figure 12.b. ACTS SCHEMATIC – Part 2 of 2

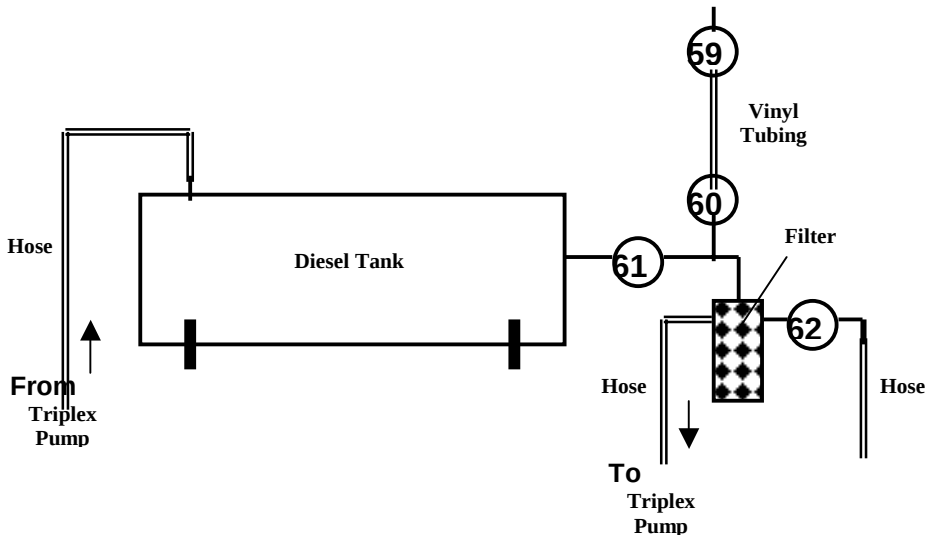

Figure 12.c. Schematic for Diesel Tank Subsystem of ACTS

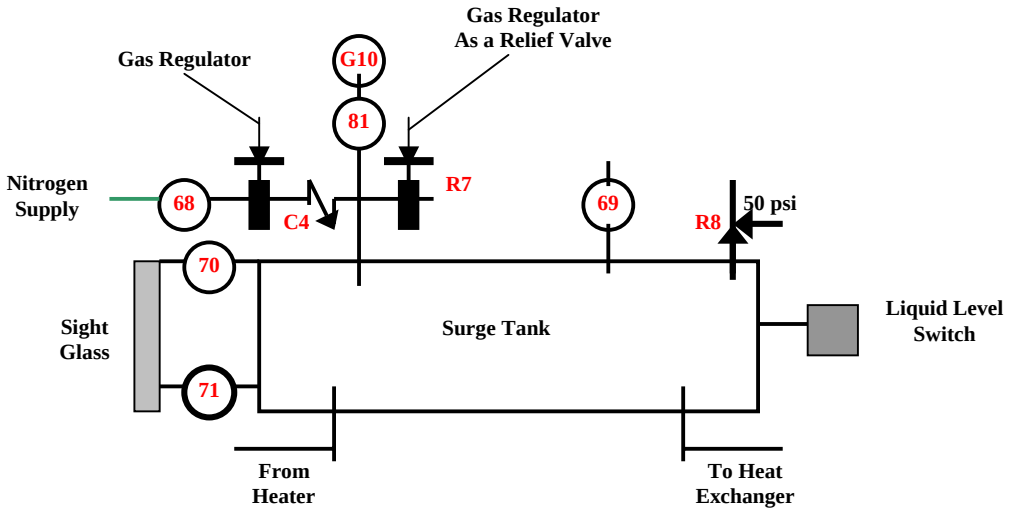

Figure 12.d. Schematic for Surge Tank Subsystem of ACTS

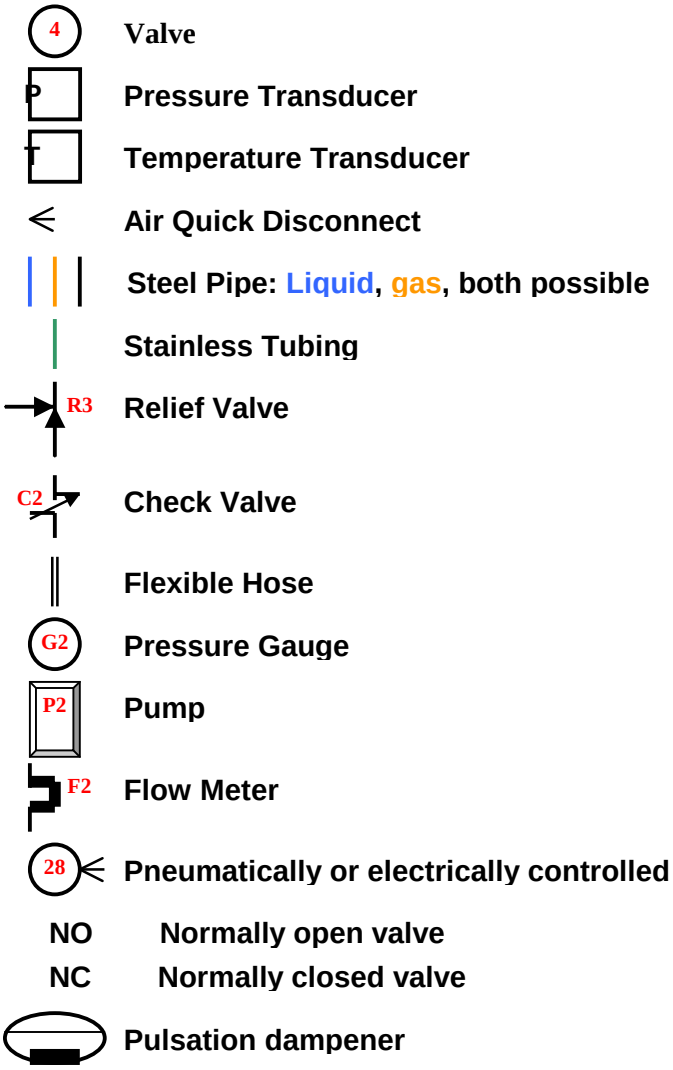

Figure 12.e. Key for Figures 12.a through 12.d

13. TECHNOLOGY TRANSFER

Meetings with Petroleum and Service Companies

As a result of our continuing efforts to attract additional JIP members, Conoco, Inc. and Weatherford Drilling & Intervention Services have decided to join the ACTS Project. Both companies have requested an ACTS Letter of Agreement. The LOA is being reviewed by their legal departments. We will continue to identify and contact additional oil and service companies that will benefit by participating in this project.

ACTS-JIP Advisory Board Meeting

The next Advisory Board Meeting will be on May 22, 2001. There are currently 9 members of the ACTS-JIP including, BP-Amoco, Chevron, Dowell Schlumberger, Halliburton, Intevep, JNOC, Petrobras, Statoil, and the U.S. D.O.E. If and when Conoco and Weatherford join, there will then be 11 sponsors of the ACTS Project.