Subsea Processing System Integration Engineering

07121-1901

December 3, 2009

imagination at work

RPSEA

Research Partnership to Secure Energy for America

Overview

Modeling Update — David Anderson

Test Facility — Dan Friedemann

Simulator Architecture — Mahadevan

Wrap-up — All

RPSEA Subsea Processing Simulator

Modeling Update

imagination at work

Three Phase Separation
Horizontal Separator

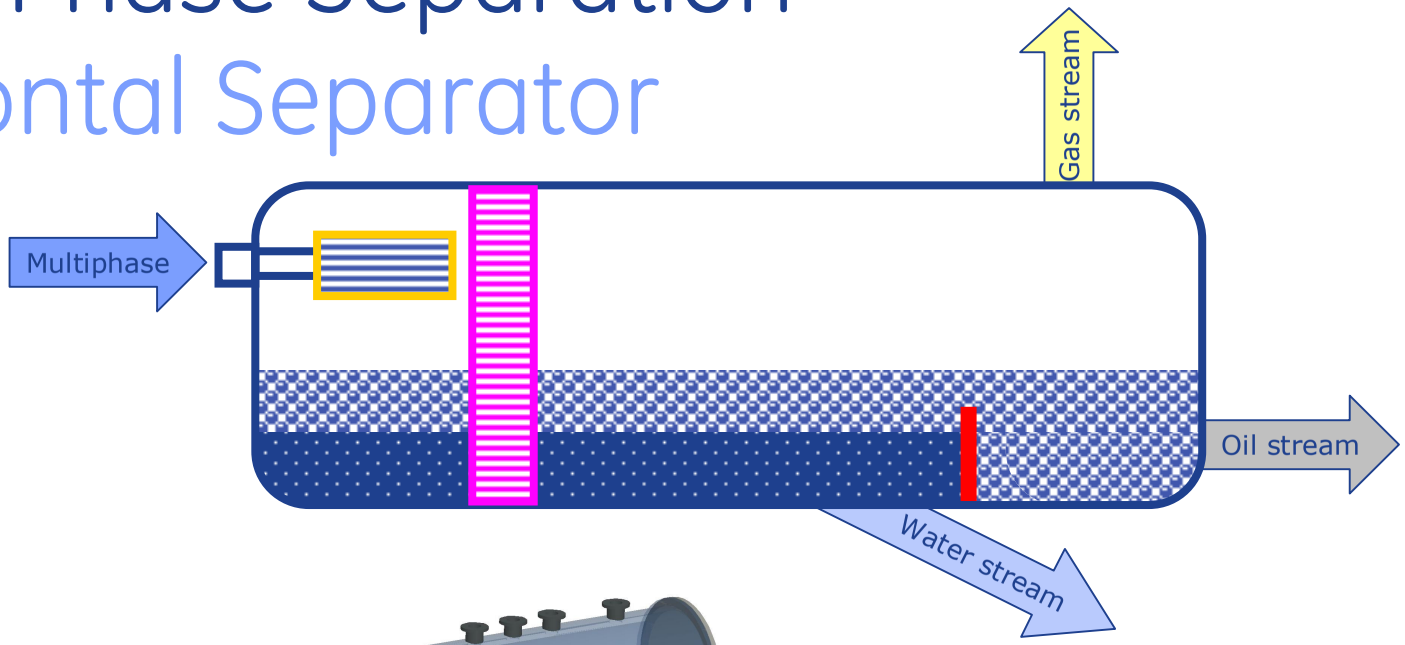

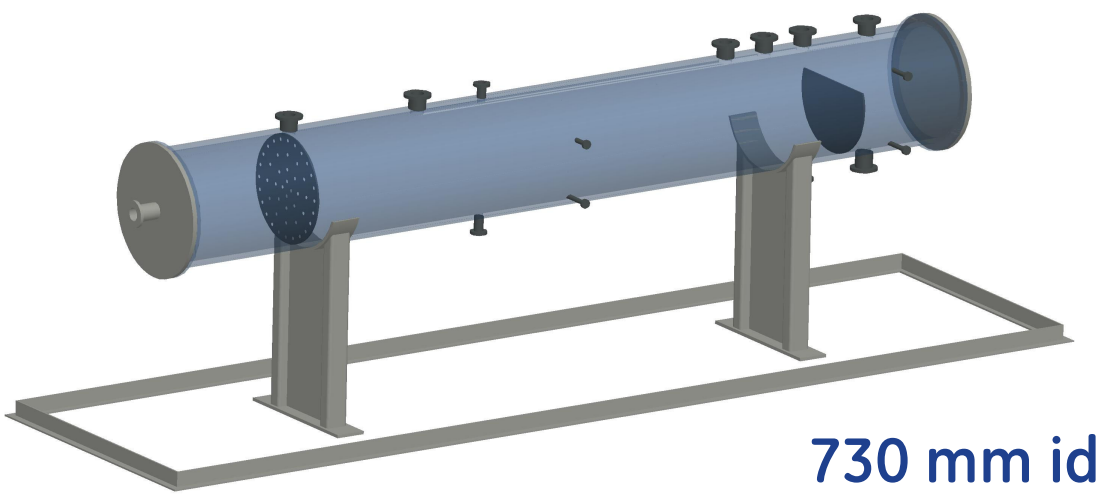

730 mm id
6000 mm overall length

imagination at work

Validation Simulation Breakdown

Objective:

1) Minimize number of tuning parameters (and still get good accuracy)
   - Limited number of runs & instrumentation to tune
   - Too much tuning limits general applicability (Black Box)
2) Ideally, tuning parameters are physics based and orthogonal

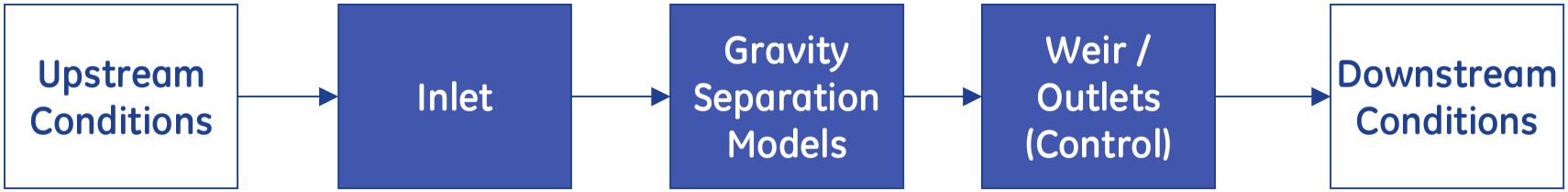

Balancing act: simplicity & accuracy

Gravity Separation Model Framework

Submodels
Droplet motions
Axial (plug) flow field
Size modifications
Etc.

Inputs:
- Spatial distribution of droplet size spectra
- Geometry inc. interface levels
- Horizontal flow velocity
- Fluid Properties

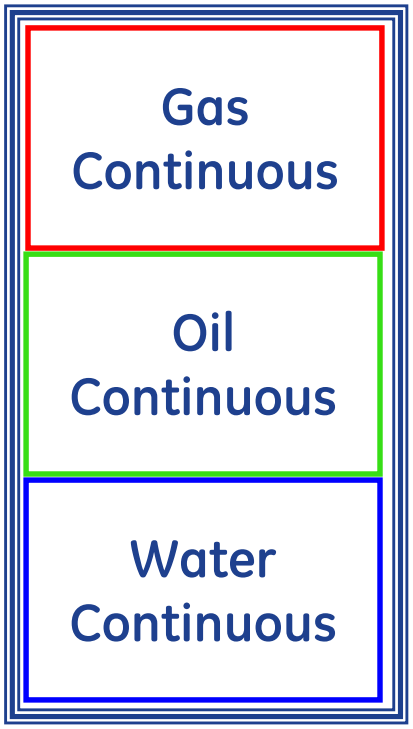

Outputs:
- Spatial distribution of droplet size spectra
- Geometry inc. interface levels
- Horizontal flow velocity
- Fluid Properties

Note *Outputs are same structure as inputs.*
→Allows use of multiple copies of the model in series
Why*? Response time is time of fluid transit.*

GSM calculates particle trajectories
(zooming opportunities)

GSM Zooming & Tuning

Code structured for easy upgrading and/or zooming

Components: oil & water droplets, gas bubbles → add sand, coated sand, complex droplets, etc.

Continuous fluid horizontal velocity: uniform, linear, arbitrary profile

Droplet motion: Stokes, Newton, add randomness?

Geometry: 2-D → 3-D

Other: droplet/bubble shapes, coalescence, breakup.

CFD, emulsion / interfaces

Possible Tuning Factors:

✓Effective geometry / velocity scaling

- Effective droplet sizes -- convoluted with inlet model.
- Effective fluid properties ☹ -- known

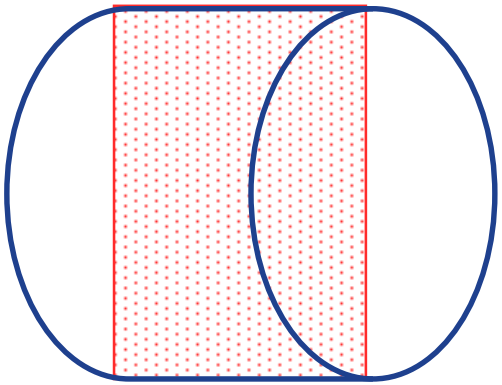

2-D model (plane) of 3-D geometry (cylinder)

GSM Simulation (Matlab)

$$V_s = \frac{2}{9}\frac{(\rho_p - \rho_f)}{\mu} g R^2$$

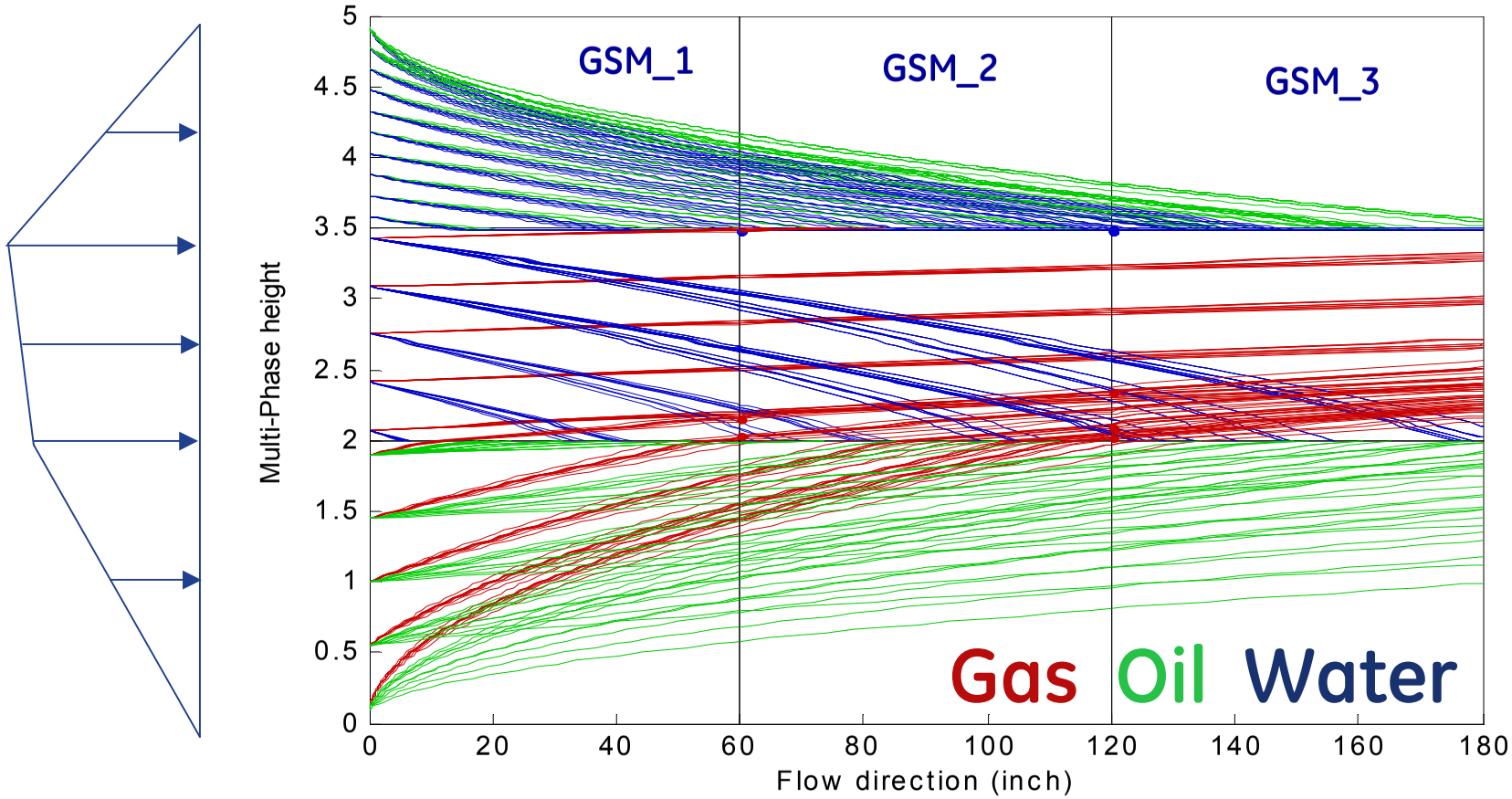

Weir Model

Grouping of models that

1) Calculates interface levels (incorporating GSMs)
2) Controls the three outlet flow rates

Lab Validation: Steady state, constant levels.

Real world: Control system, valve performance, DP, etc.

Inlet Model

Use CFD to relate upstream conditions to boundary conditions for GSM:

1) Volume Fractions

2) Droplet size / spatial distribution

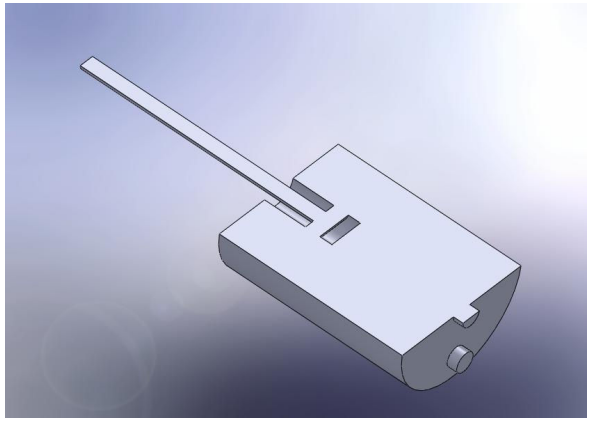

Fluid Domain

Volume Fractions

CFD used to determine phase distribution at baffle plate discharge as function of upstream conditions

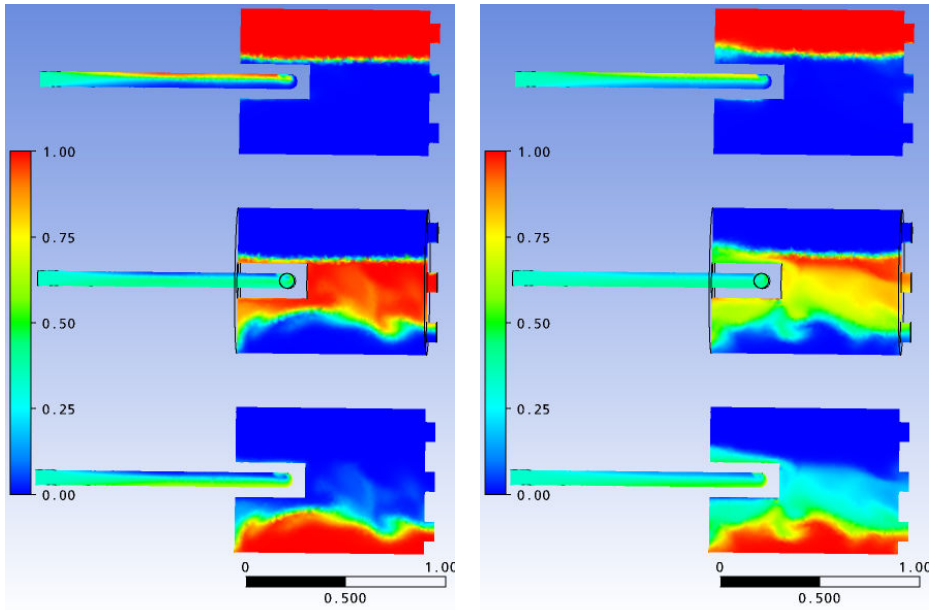

10 bar 50 m³/hr (left), 100 m³/hr (right)

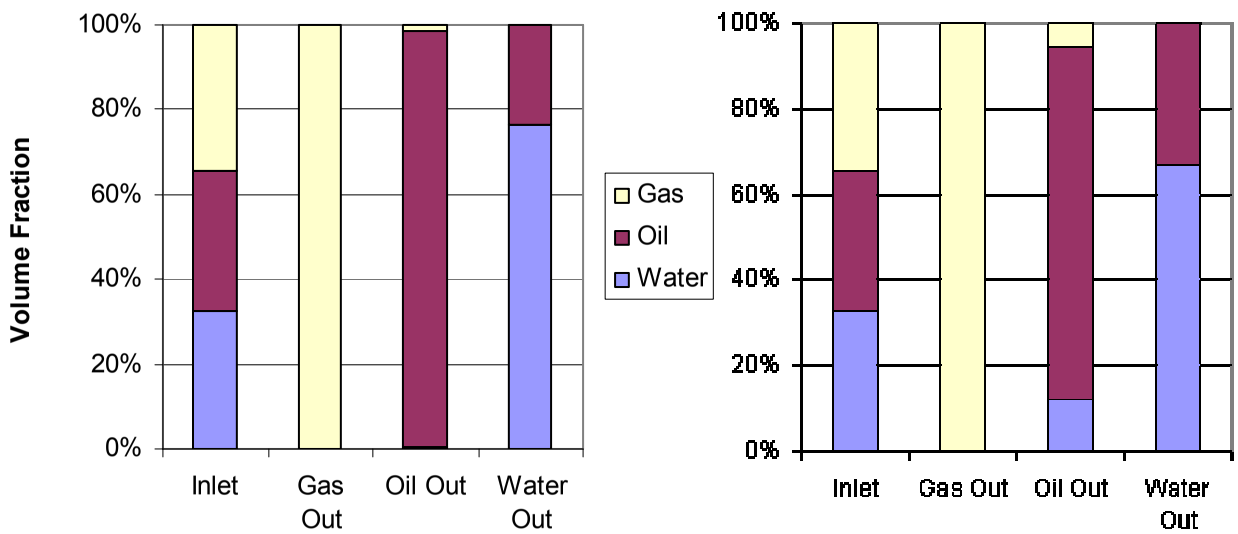

Droplet Sizes

Maximum stable drop size is described by a critical Weber Number

$$We_{crit} = \frac{\rho_c \cdot V^2 \cdot d_{\max}}{\sigma}$$

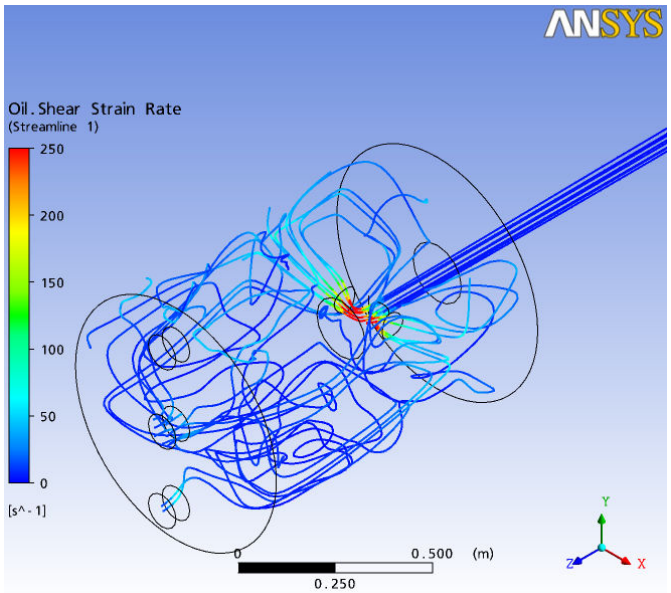

CFD runs to determine shear strain rate along path as function of upstream conditions.

Hinze

$$d_{\max} = \frac{C}{\left(d_N(SSR)\right)^K} \cdot \left(\frac{\sigma}{\rho_c}\right)^{3/5}$$

(Dimensional Analysis also useful)

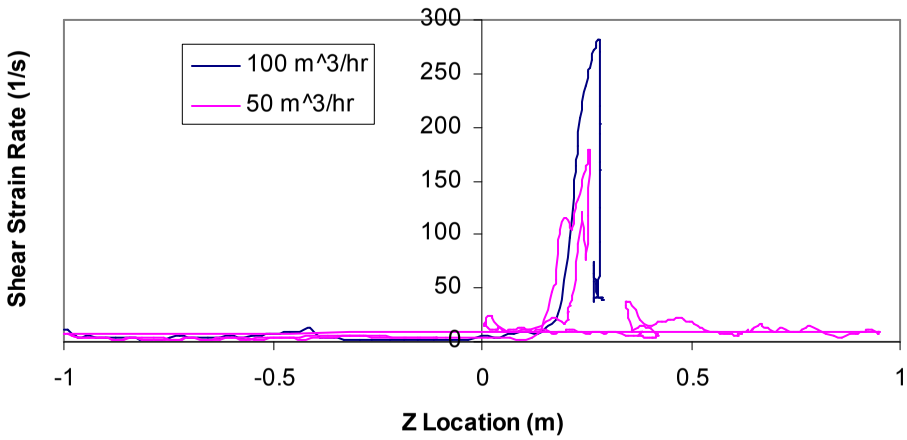

Rosin-Rammler distribution used to obtain size distributions from d_{max}.

imagination at work

RPSEA Subsea Processing Simulator

Flow Loop Update

imagination at work

Operational Capabilities

Pressure: 16 bar design pressure @ 20°C (PN10)

Flowrates:

- Oil: max 70m^3/hr, min 10 m^3/hr
- Water: max 70m^3/hr, min 10 m^3/hr
- Gas: max 270Am^3/hr (@10 bar), min 1 Am^3/hr
- Design Temperature (max/min): 40/4 °C

Fluids:

- Salt water; 0-10% of relevant salts (based on city water or distilled water with O_2)
- Model oils, stripped crude oils (no explosive gasses will be allowed in the laboratory)
- Air and N_2

Lay-out

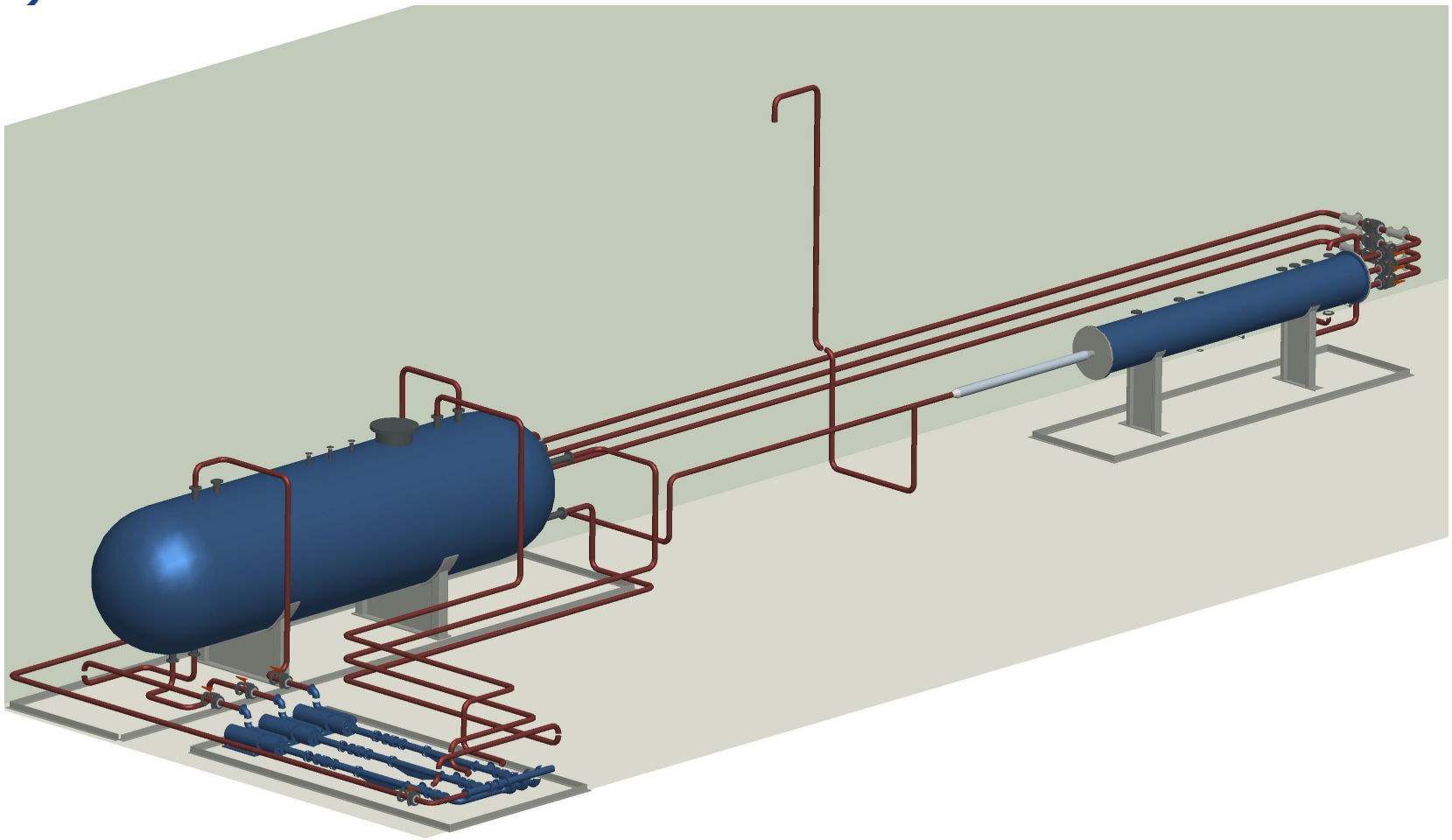

Modular design

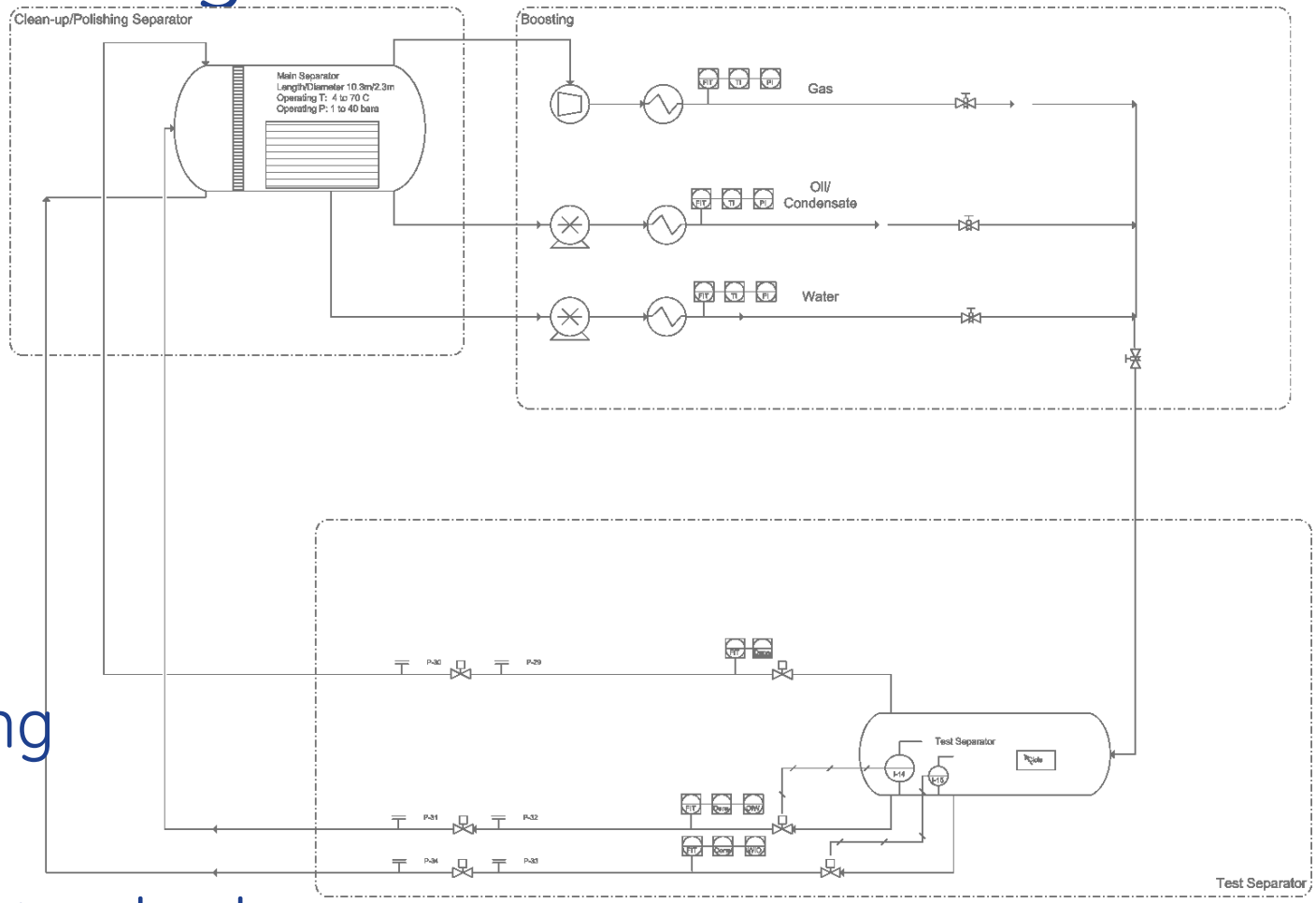

Flanged piping

No EX

No offshore standards

imagination at work

Polishing separator

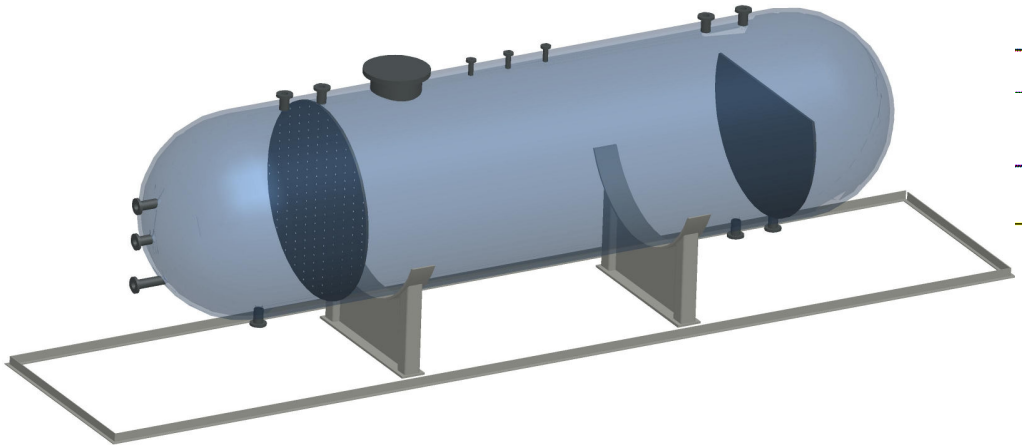

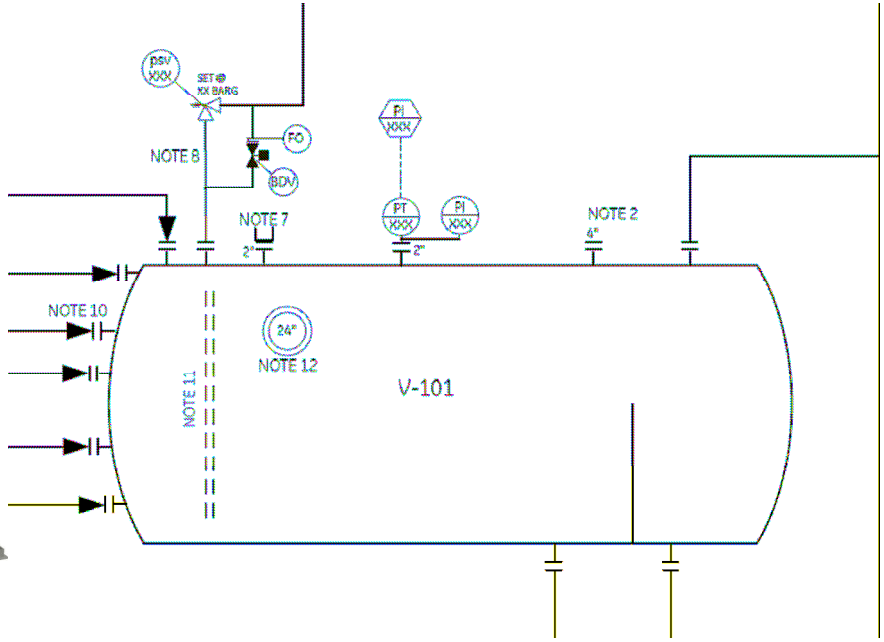

Weir plate:

- located @7m and to cover 70% of area (sealed connection to tank wall).

Internals:

- Internal flange on all nozzles except for the DN50 PT-nozzle and DN110 spare.
- perforated plate mounted in the first set of brackets (1m from seam on inlet side). 10% light opening using 1" diameter perforations.

Brackets:

- Internal mounting brackets are to be located @ 1m (perforated plate), 3m and 5m from seam on inlet side, inside the separator.

Test Separator

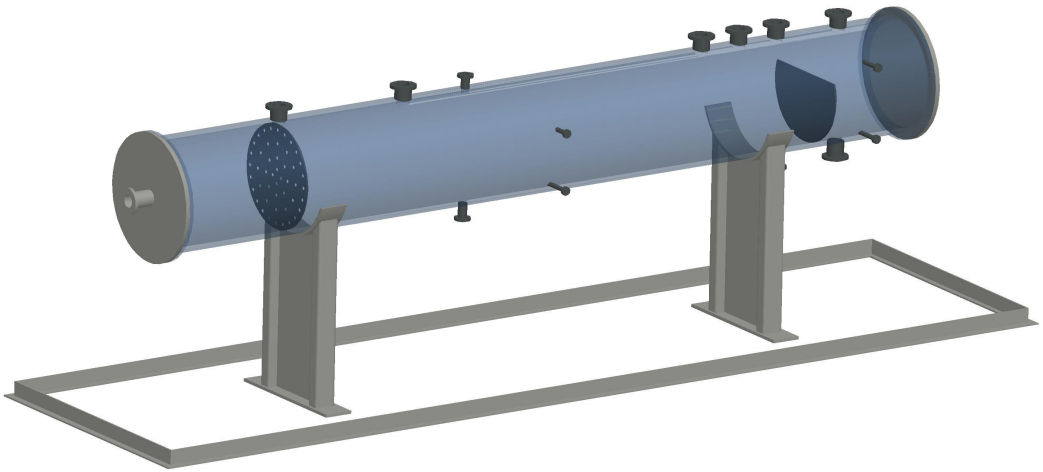

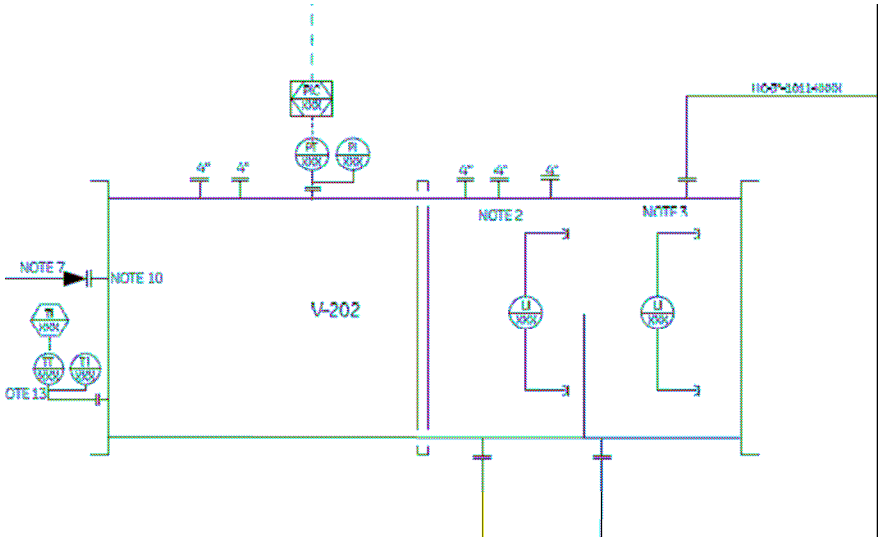

Weir plate:

- located 0.75 meter upstream of seam at outlet end of tank (=5.25m from inlet side) and to cover 70% of area.

Internals:

- Internal flange on all nozzles (except for the DN50 PT-nozzle and DN110 spare).
- perforated plate mounted in the first set of brackets (1m from seam on inlet side). 10% light opening using 1" diameter perforations.

Brackets:

- Internal mounting brackets at 1m (perforated plate) and 5m

Daviters for both end lids

Booster module

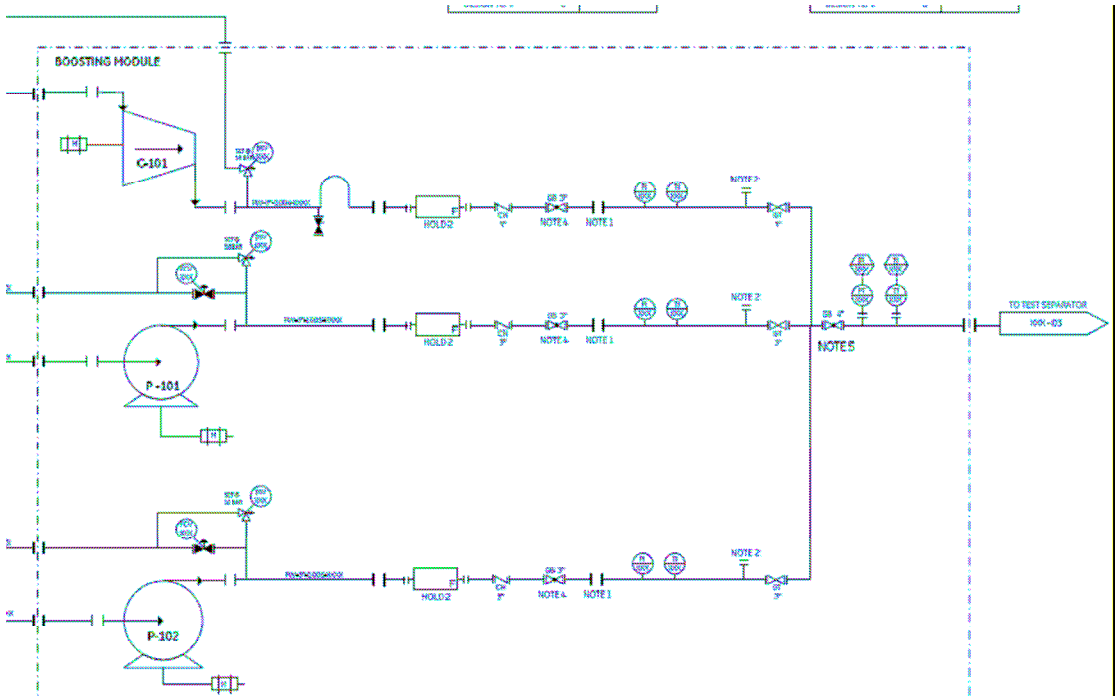

Main Equipment:

> Pumps: Flowserve 80-50-CPX-315-FPD-DS
  - 70m^3/hr, DP=10 bar, PN16
  - P=37kW (rated)

> Compressor: Boge SLF40
  - 270 Am^3/hr, DP=13bar, Air/N_2
  - P=30kW

> Flowmeters:
  - KROHNE coriolis meter for liquid, Optimass 1300C
  - KROHNE vortex meter for gas, Optiswirl 4070C

Test separator module

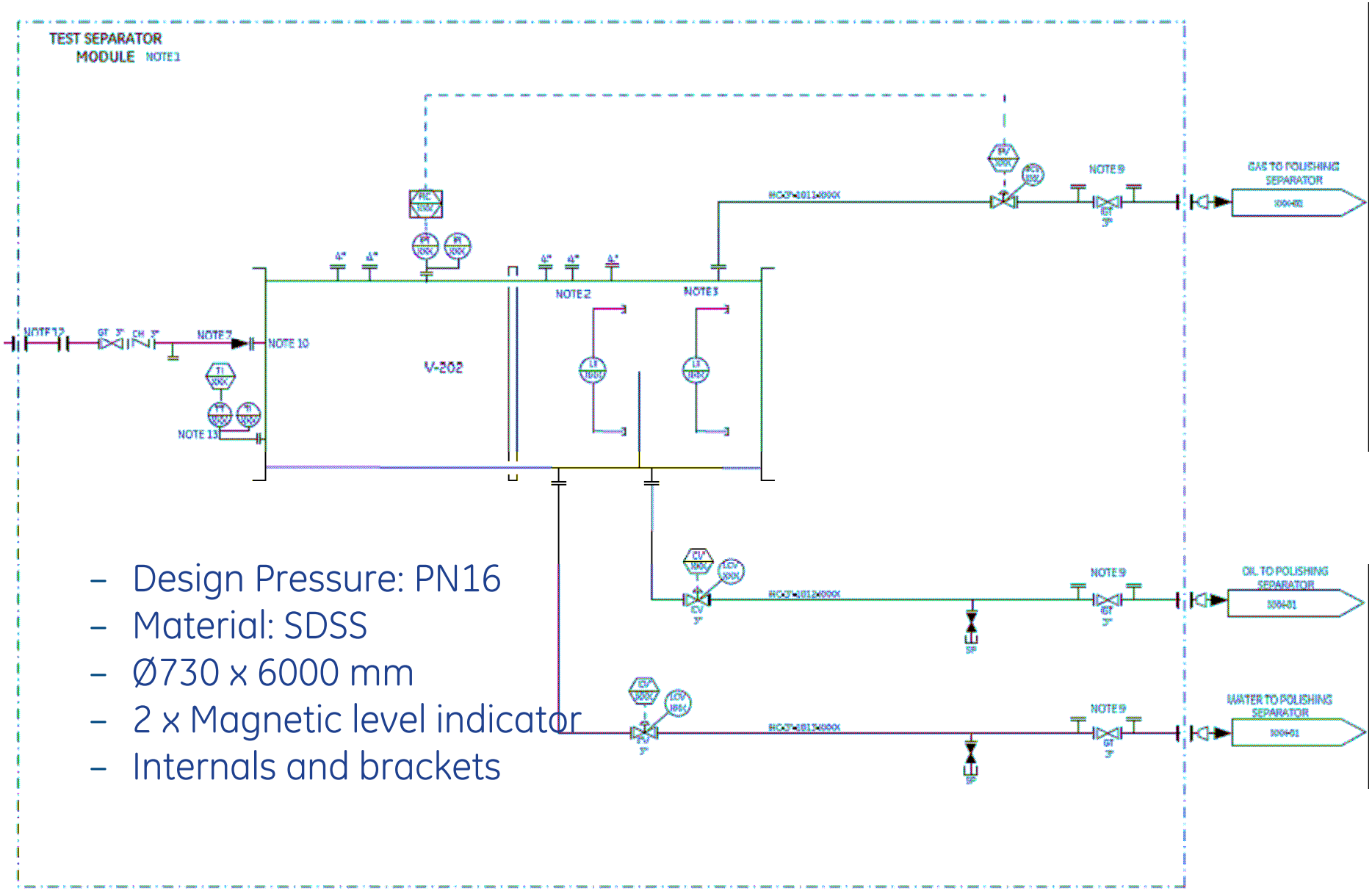

- Design Pressure: PN16
- Material: SDSS
- Ø730 x 6000 mm
- 2 x Magnetic level indicator
- Internals and brackets

Polishing separator module

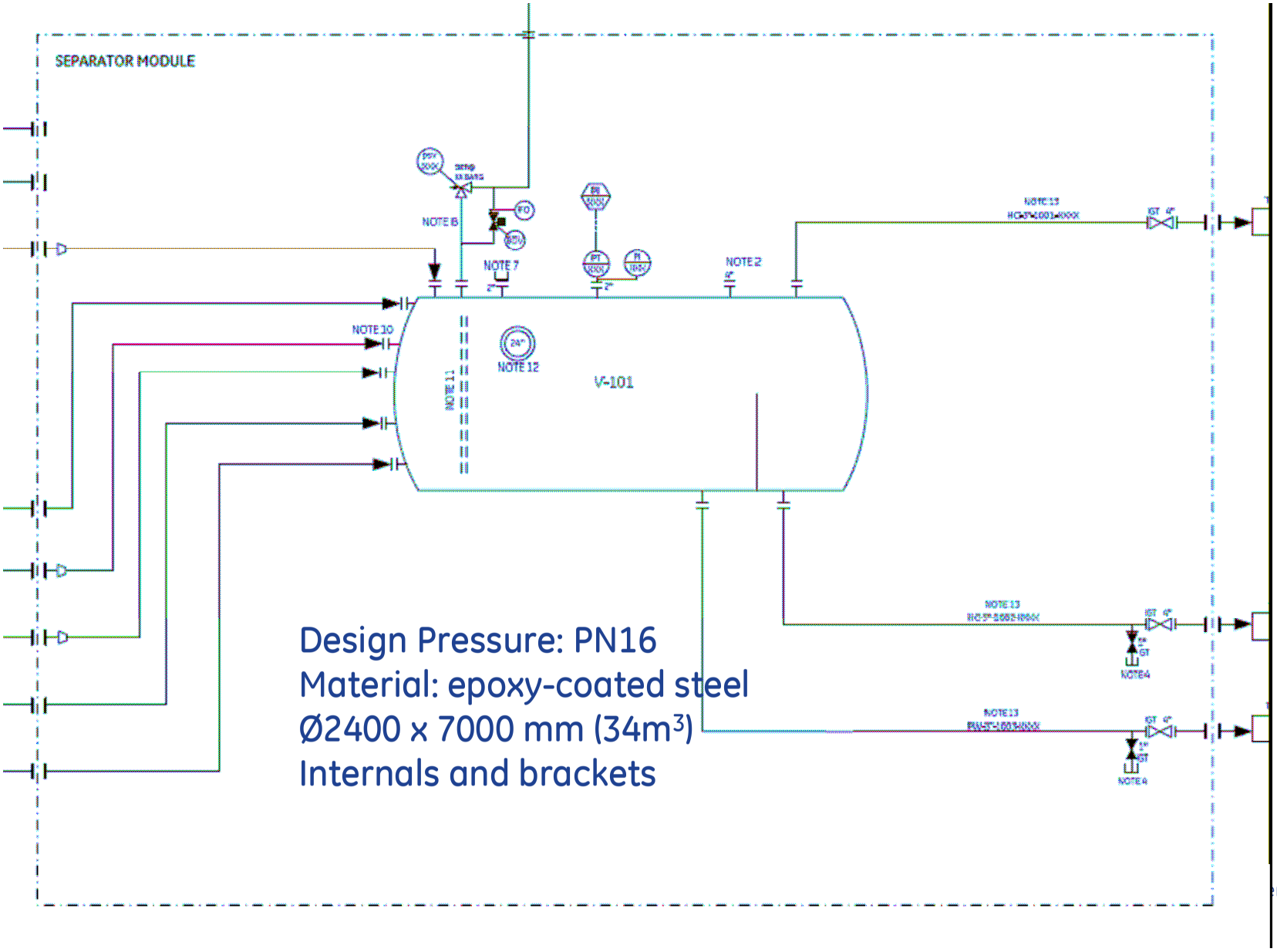

Design Pressure: PN16
Material: epoxy-coated steel
Ø2400 x 7000 mm (34m^3)
Internals and brackets

Model Oils

GOM target oils:	**Model oils:**
Lighter Miocene	Exxol D80
SG: 0.6-0.85	SG: 0.79
Viscosity 0.5-2 cP	Viscosity 1.71 cP @ 25 C
Paleogene	Tulco Tech 80
SG: 0.8 to 0.9	SG: 0.86
Viscosities: 1 to 50 cp	Viscosities: 15.3 cP @ 25 C
	Shell Vitrea 32
	SG: 0.87
	Viscosities: 56 cP @ 25 C

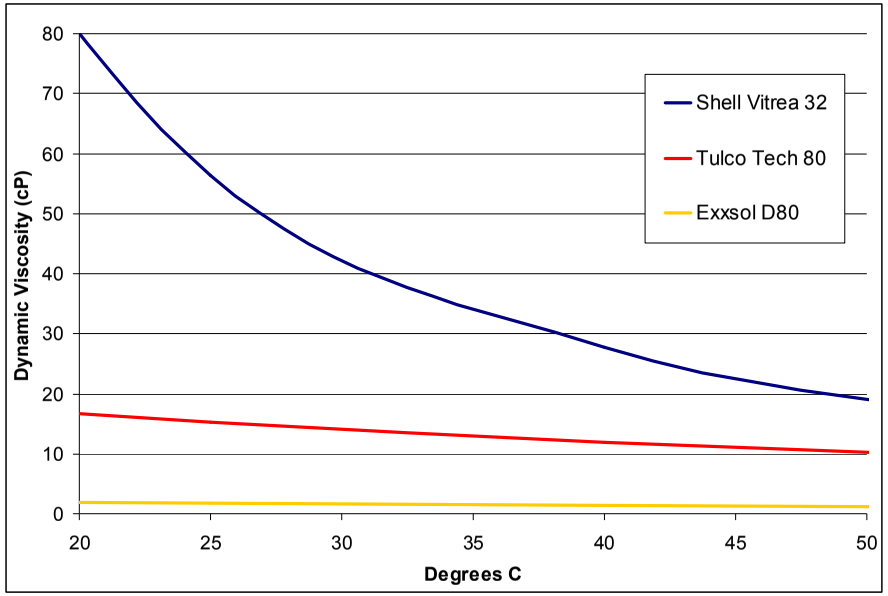

Summary

Long lead items on order

- 22 weeks for pumps, May 1 2010 expected delivery

All else in ordering process

Range of GOM viscosities covered by model oils selected

Full GOM pressures and temperatures not achievable in lab setting

- Value of separation increases as separation pressure decreases
- Lab capability relevant to likely first applications

Loop, test separator and test plan design will ensure successful and failed separation operation, outlining performance boundaries

RPSEA Subsea Processing Simulator

Simulator Update

imagination at work

Key Development Fronts

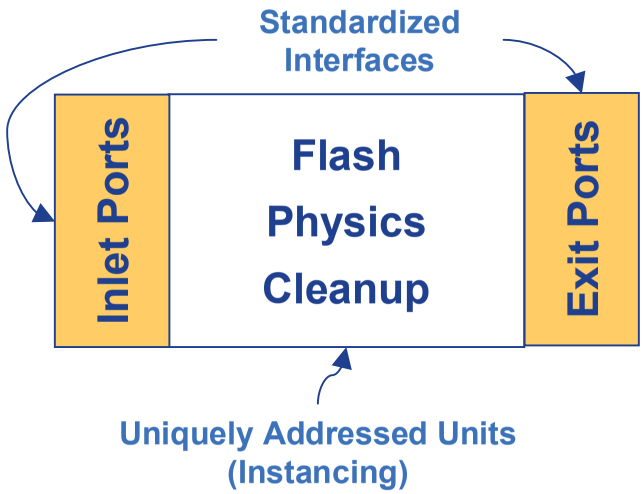

Inner workings:

Translation of **model** library from MATLAB is straightforward

Interfacing:

Three NPSS Platform Development Requirements

1) Flashing—fluid properties (Demo in Sept meeting)
2) **Interfacing HYSYS with Process Simulator** (Demo today)
3) C++ Implementation into NPSS Syntax / Solvers (in progress)

Interfacing with Process Simulator

HYSYS to Simulator Integration

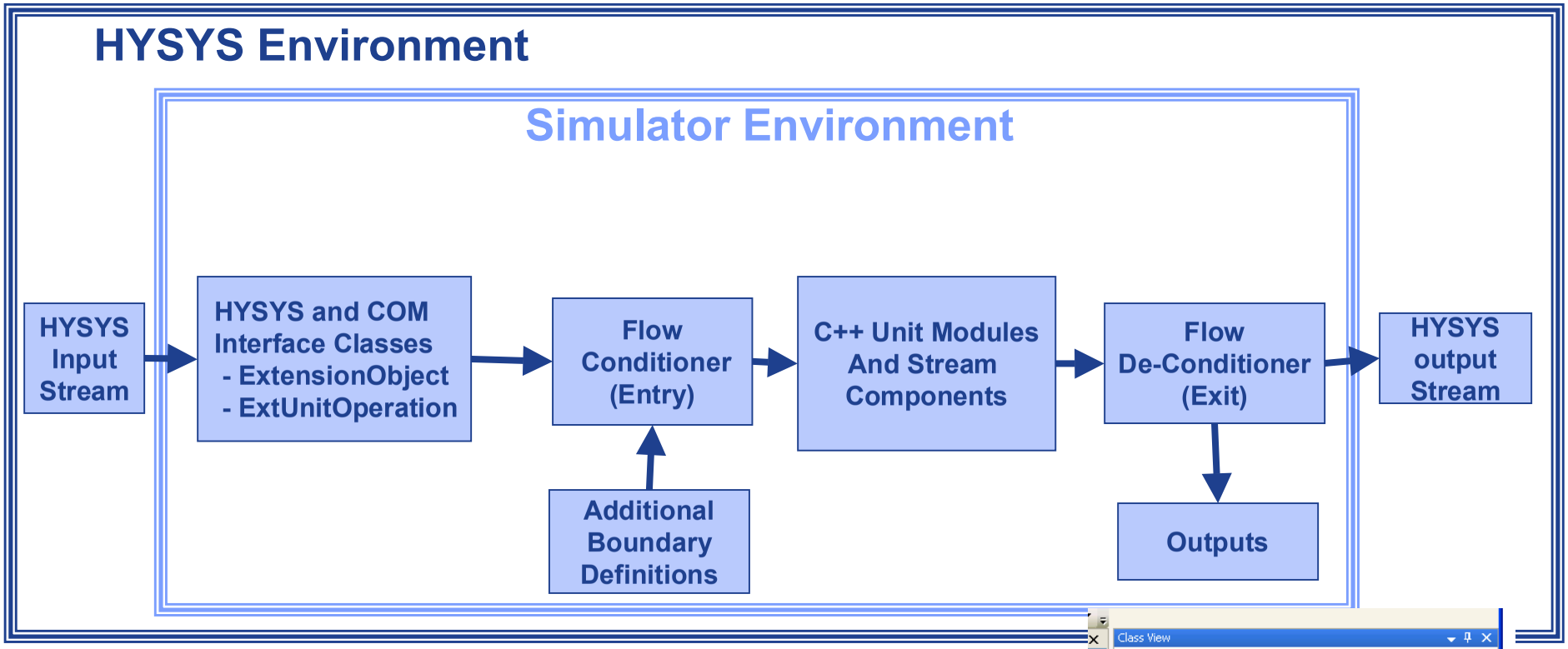

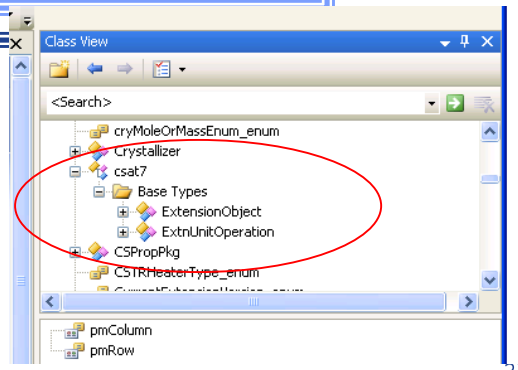

HYSYS and COM interface classes for C++ implementation

- COM – interface to operating system
- HYSYS Object Derived
  - EXtensionObject & ExtUnitOperation

imagination at work

HYSYS Extension Primary Objects (C++)

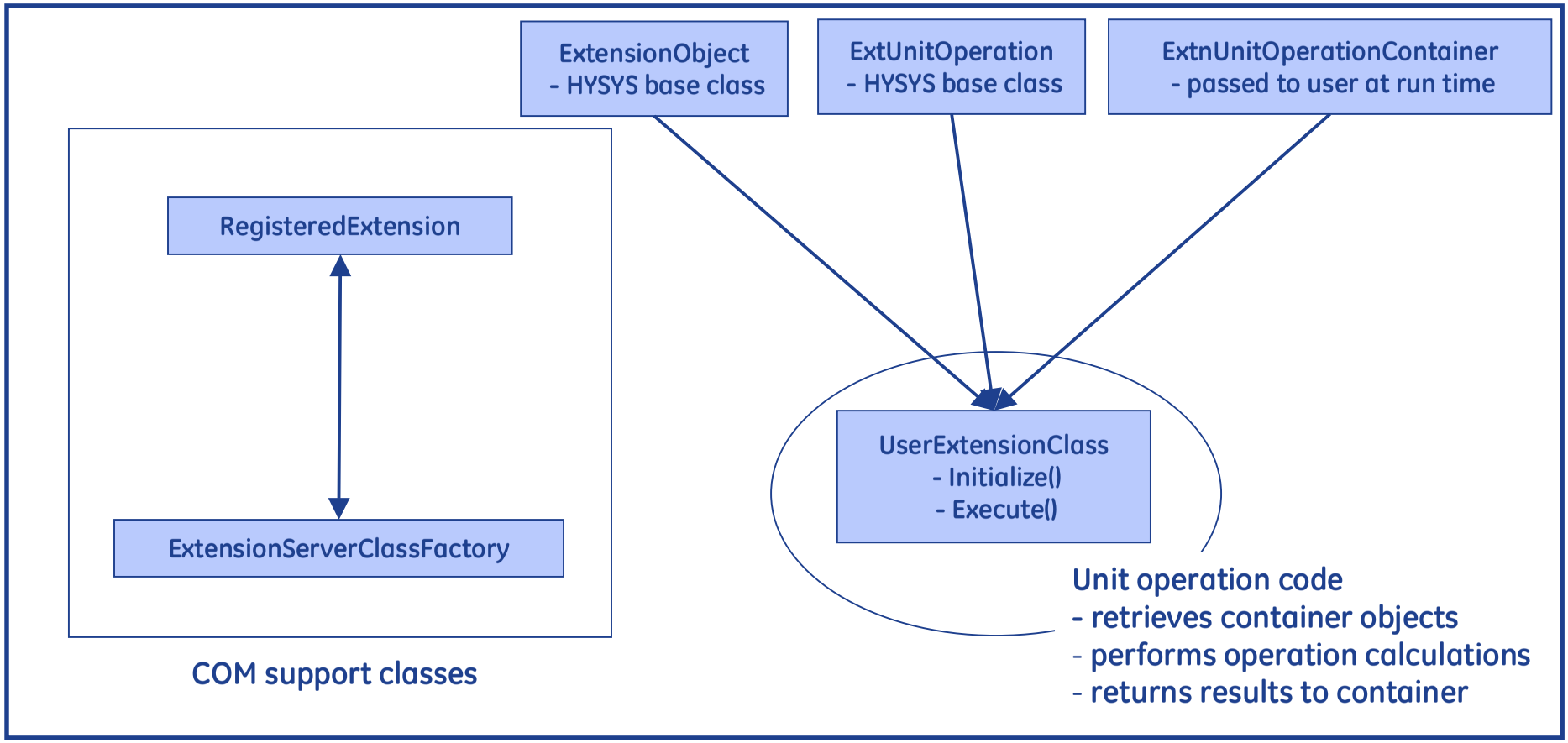

Extension Unit Operation Dynamic Link Library (DLL)

HYSYS – NPSS Connection

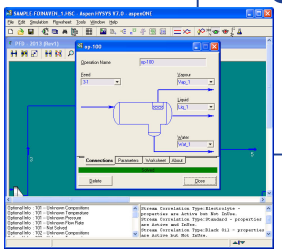

HYSYS

- User Extension Class
  - Initialize
  - Execute

AND

OR

NPSS

Basic Functions
Npss.lib

Separator
Model

- Export (Black Box)
  - DLL, Key

- Development
  - Interpreted Code

HYSYS NPSS Connection (Example)

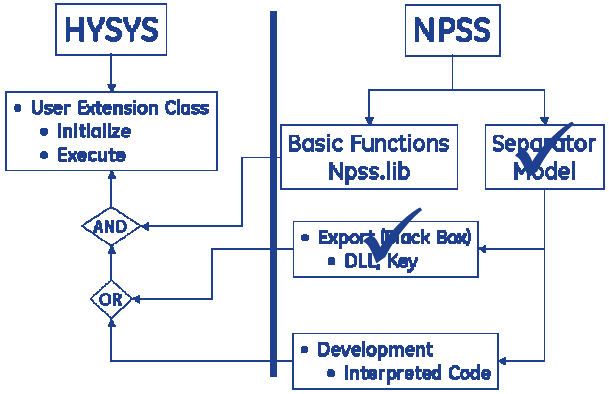

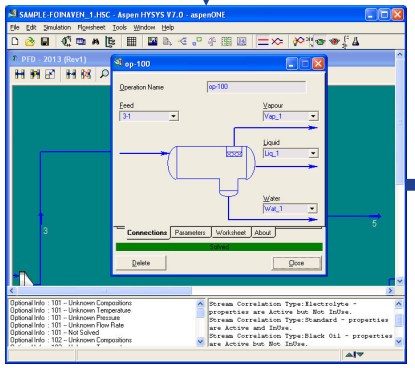

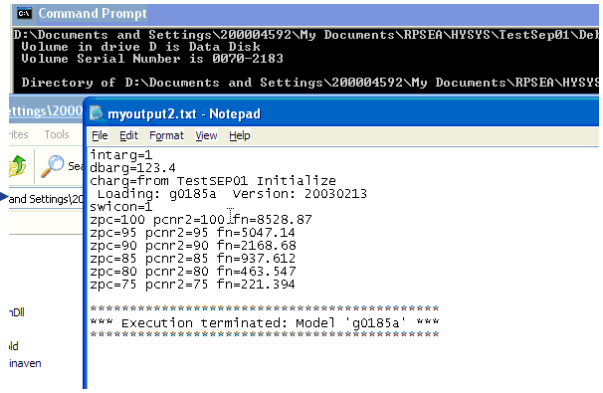

Recorded Demo of Process

C++ Implementation into NPSS Syntax

imagination at work

Inherited from current NPSS Structure

Fundamental Classes

Thermodynamic Module
- Single Instance
- DB structure

Methane	1
Ethane	2
Propane	3
i_Butane	4
n_Butane	5
i_Pentane	6
n_Pentane	7
n_Hexane	8
n_Heptane	9

MFLInterface

Interface Class	MFLInterface

Interface Methods	**/* Primary Methods */**
	int performPTFlash(double, double);
	int performPHFlash(double, double);
	int performMixtureCalculation();
	int defaultFlashMixtureProperty();
	
	void releaseLicense();
	
	/* Accessor Methods, Array as well as aggregate */
	void getMFLTemperature(double&);
	int getPhaseArrayProperties(int, double*);
	int getOverallProperty(int, double&);
	void getNumberOfPhases(int&);
	void getNumberOfComponents(int&);
	void getMoleValueOfComponents(double*);
	void getComponentIndexArrayInPhase(int*);
	int getComponentValueArrayInPhase(int, double*);
	static void calculateAggregate(int, double*, double*, double&);
	static void calculateSum(int, double*, double&);
	int getMFLComponentIndex(string, int&);
	int getMFLComponentString(int, string&);
	void normalizeMoleCount();
	int clearCompositionValues();
	int setCompositionIndexValues(string, double);

FlowStation
- Fluid Composition
- Discrete / Continuous
- Invoke Flashing Routines

1:1 → **Stream Ports Inlet** → n:1 → **Element** → m:1 → **Stream Ports Outlet**

Example

COMPONENT	OVERALL	PHASE1	PHASE2	PHASE3
		GAS	LIQUID1	WATER
	fractions	fractions	fractions	fractions
METHANE	30.00%	42.60%	17.59%	0.00%
ETHANE	30.00%	36.99%	39.33%	0.00%
PROPANE	20.00%	20.33%	43.02%	0.00%
BUTANE	0.00%	0.00%	0.00%	0.00%
PENTANE	0.00%	0.00%	0.00%	0.00%
HYDROGEN	0.00%	0.00%	0.00%	0.00%
NITROGEN	0.00%	0.00%	0.00%	0.00%
OXYGEN	0.00%	0.00%	0.00%	0.00%
WATER	20.00%	0.08%	0.05%	100.00%
Total(mole)	1	0.636527	0.164062	0.199411

Reuse Fundamental Base Classes to Leverage Current Framework

NPSS Out of the Box Features

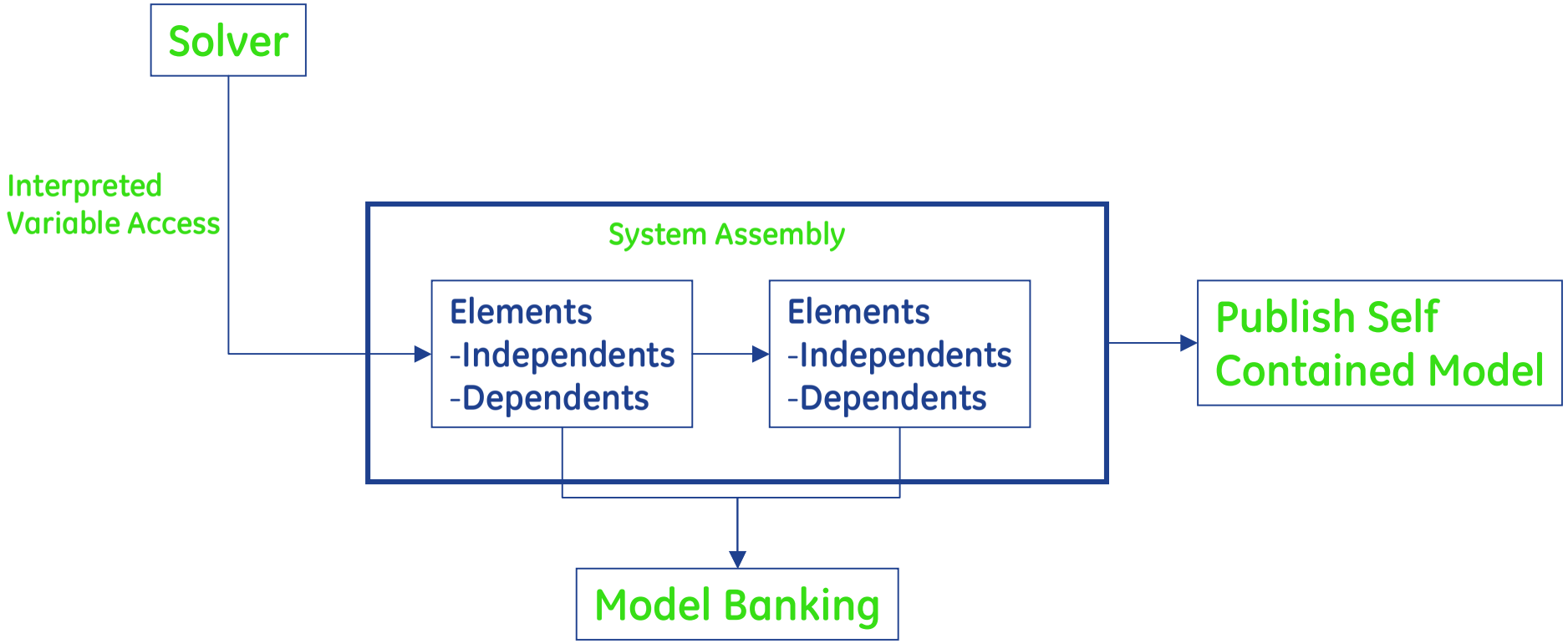

NPSS Out of Box Features (Green) that can be leveraged

Backup

imagination at work

Hierarchical Simulator

Operation Engineers
Specification & Operation

Equipment Suppliers
Design & Optimization

RPSEA Phase 2
Pilot Scale

RPSEA Phase 1
Lab Scale

Simulator Architectural Entitlement

Simple Processing Systems
Simple Component Models
Simple Component Interfaces
Simple Fluid Systems & Chemistry
Low Fidelity
Low Resolution
Computationally Inexpensive
Easy to build & troubleshoot

Increasing Complexity

Zooming

Complex Processing Systems
Complex Component Models
Complex Component Interfaces
Complex Fluid Systems & Chemistry
High Fidelity
High Resolution
Computationally Expensive
Evolved from simpler models

Architecture capability supports full range
but
Validation is at Lab Scale

imagination at work

Red: Experimental Budget

Proposed Test Plan

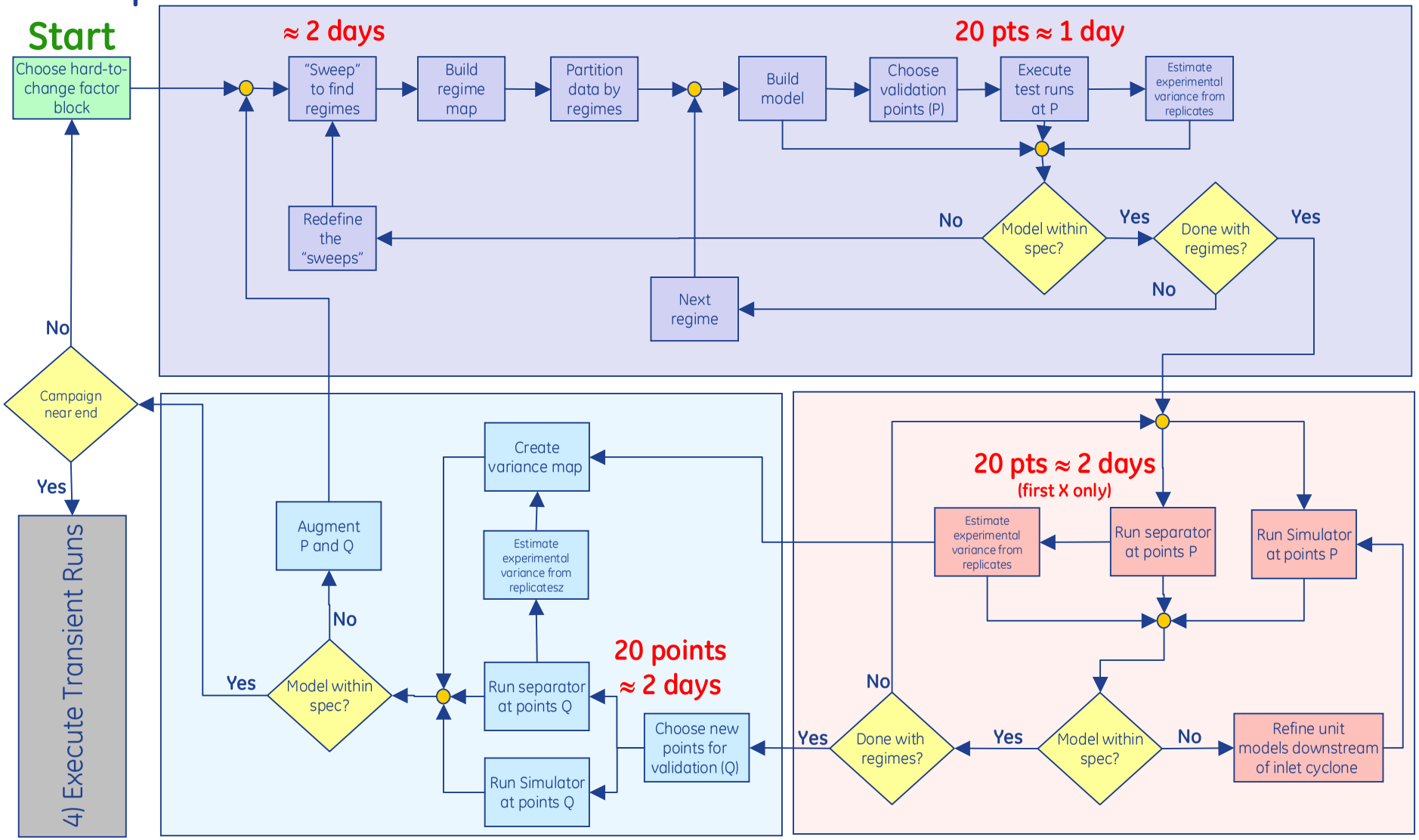

imagination at work