**Bechtel**

*3000 Post Oak Boulevard*
*Houston, Texas 77056-6503*
*Mailing address: P.O. Box 2166*
*Houston, Texas 77252-2166*

December 21, 1992

U. S. Department of Energy
Pittsburgh Energy Technology Center
Mail Stop 922-H
P. O. Box 10940
Pittsburgh, PA 15236

Attention: Mr. Swenam Lee
Project Manager

Subject: D.O.E. Coal Liquefaction
Base Line Design and System Analysis
Contract No. DE-AC22 90PC89857
Bechtel Job No. 20952
**Task V, Final Topical/Task Report**
Letter No. BLD-124

Dear Mr. Lee:

Attached for your files are three copies of the Task V, Final Topical/Task report. Task V addresses the process simulation model for baseline and options. As shown in the Table of Contents of the report, there are several appendices to this report which will be published in January/February 1993. These appendices will incorporate the updates reflecting the improved baseline case currently in progress.

Per your request, one of these copies is bound in a loose leaf 3-ring binder for your desk use. Copies to other members of DOE, as required by the contract are sent directly to each of them.

Sincerely yours,

Syamal K. Poddar
Project Manager

Attachment

cc: Martin Byrnes, DOE/PETC
Robert Hamilton, DOE/PETC
A. Schachtschneider, AMOCO (2)
File
Gilbert V. McGurl, DOE/PETC
Joanne Wastek, DOE/PETC

**The information and data contained in this report are the result of an ecomonic evaluation and a preliminary design effort and because of the nature of this work no guarantees or warranties of performance, workmanship, or otherwise are made, either expressed or by implication.**

# TASK V TOPICAL REPORT:
# PROCESS SIMULATION MODEL FOR THE BASELINE AND OPTIONS

## TABLE OF CONTENTS


PAGE

1. INTRODUCTION . . . . . 1-1

2. EXECUTIVE SUMMARY . . . . . 2-1

   2.1 Task Summary . . . . . 2-1

   2.2 Model Summary . . . . . 2-1

3. PROCESS SIMULATION MODEL--BASELINE DESIGN . . . . . 3-1

   3.1 Overview . . . . . 3-1

   3.2 Fortran Blocks and Fortran User Block Models . . . . . 3-4

      3.2.1 General Features . . . . . 3-5
      3.2.2 Process Calculations . . . . . 3-6
      3.2.3 Utilities Calculations . . . . . 3-7
      3.2.4 Operating Labor . . . . . 3-8
      3.2.5 Capital Costs . . . . . 3-8
      3.2.6 Error Checking and Warning Messages . . . . . 3-10
      3.2.7 Input Parameters . . . . . 3-11
      3.2.8 Management Summary Report . . . . . 3-18

   3.3 Description of the Plant Simulation Models . . . . . 3-20

      3.3.1 Coal Cleaning/Preparation, Plants 1 and 1.4 . . . . . 3-20
      3.3.2 Coal Liquefaction, Plant 2 . . . . . 3-22
      3.3.3 Gas Plant, Plant 3 . . . . . 3-24
      3.3.4 Naphtha Hydrotreater, Plant 4 . . . . . 3-26
      3.3.5 Gas Oil Hydrotreater, Plant 5 . . . . . 3-27
      3.3.6 Hydrogen Purification, Plant 6 . . . . . 3-29
      3.3.7 ROSE-SR Solids/Liquid Extraction, Plant 8 . . . . . 3-30
      3.3.8 H2 Production by Coal Gasification, Plant 9 . . . . . 3-31
      3.3.9 Air Separation, Plant 10 . . . . . 3-33
      3.3.10 Sulfur Recovery, Plant 11 . . . . . 3-34
      3.3.11 Steam and Power Generation, Plant 31 . . . . . 3-35
      3.3.12 Ammonia Recovery, Plant 38 . . . . . 3-36
      3.3.13 Phenol Recovery, Plant 39 . . . . . 3-37

TABLE OF CONTENTS
(Continued)

3.4 Description of the Overall Process Simulation Model . . . . . 3-38

3.5 Simulation of the Baseline Design . . . . . 3-41

3.6 Detailed Operating Instructions . . . . . 3-43

4. OVERVIEW OF THE LOTUS SPREADSHEET ECONOMICS MODEL 4-1

5. OPTION 1 -- LIQUEFACTION FEED COAL CLEANING BY HEAVY MEDIA SEPARATION . . . . . 5-1

6. OPTION 2 -- LIQUEFACTION FEED COAL CLEANING BY SPHERICAL AGGLOMERATION . . . . . 6-1

7. OPTION 3 -- THERMAL-CATALYTIC LIQUEFACTION REACTOR CONFIGURATION . . . . . 7-1

8. OPTION 4 -- CATALYTIC-CATALYTIC REACTOR CONFIGURATION WITH VENT GAS SEPARATION . . . . . 8-1

9. OPTION 5 -- FLUID COKING OF VACUUM BOTTOMS . . . . . 9-1

10. OPTION 6 -- STEAM REFORMING OF NATURAL GAS FOR HYDROGEN PRODUCTION PLUS AN FBC UNIT . . . . . 10-1

10.1 Hydrogen Production by Steam Reforming of Natural Gas Plant, Plant 9.1 . . . . . 10-1

10.2 Fluidized Bed Combustor and Steam Turbine Generator, Plants 31.1 and 31.4 . . . . . 10-3

10.3 Overall Process Simulation for Option 6 . . . . . 10-4

11. OPTION 7 -- ADDITION OF A NAPHTHA REFORMER . . . . . 11-1

12. THE COAL LIQUEFACTION KINETIC REACTOR MODEL . . . . . 12-1

12.1 Overview . . . . . 12-1

12.2 Introduction . . . . . 12-1

TABLE OF CONTENTS
(Continued)

12.3 Overall Methodology . . . . . 12-2

12.4 Resid Conversion Kinetics . . . . . 12-5

12.5 Catalyst Addition/Withdrawal Requirements . . . . . 12-6

12.6 Extent of Thermal Reactions . . . . . 12-7

12.7 Heat Balance Around Ebulated-Bed Reactor . . . . . 12-8

12.8 Reactor Fluid Dynamics . . . . . 12-8

12.9 Results . . . . . 12-12

12.10 ASPEN/SP Fortran Implementation . . . . . 12-13

12.11 ASPEN/SP Kinetic Model Reactor Simulation . . . . . 12-17

12.12 Executing the Coal Liquefaction Kinetic Reactor Model . . . . . 12-17

12.13 Recommendations for Modifications to the Model . . . . . 12-19

**APPENDICES - PART I**

A. ASPEN/SP PROCESS SIMULATION MODEL INPUT FILE FOR THE BASELINE DESIGN . . . . . A-1

B. ASPEN/SP DIRECT COAL LIQUEFACTION PROCESS SIMULATION MODEL FORTRAN USER BLOCK MODELS . . . . . B-1

## TABLE OF CONTENTS
(Continued)

## APPENDICES - PART II


C. ASPEN/SP DIRECT COAL LIQUEFACTION PROCESS SIMULATION MODEL SUPPLEMENTAL FORTRAN LISTINGS . . . . . C-1

D. MISCELLANEOUS FILE LISTINGS . . . . . D-1
The ASP.BAT File . . . . . D-3
The DCLRPT.BAT File . . . . . D-4
The DCLSTART.REP File . . . . . D-7

E. MANAGEMENT SUMMARY REPORT FOR THE BASELINE DESIGN . . . . . E-1

F. ASPEN/SP PROCESS SIMULATION MODEL INPUT FILE FOR OPTION 1 -- LIQUEFACTION FEED COAL CLEANING BY HEAVY MEDIUM SEPARATION . . . . . F-1

G. ASPEN/SP PROCESS SIMULATION MODEL INPUT FILE FOR OPTION 2 -- LIQUEFACTION FEED COAL CLEANING BY SPHERICAL AGGLOMERATION . . . . . G-1

H ASPEN/SP PROCESS SIMULATION MODEL INPUT FILE FOR OPTION 3 -- THERMAL-CATALYTIC LIQUEFACTION REACTOR CONFIGURATION . . . . . H-1

I. ASPEN/SP PROCESS SIMULATION MODEL INPUT FILE FOR OPTION 4 -- CATALYTIC-CATALYTIC LIQUEFACTION REACTOR WITH VENT GAS SEPARATION . . . . . I-1

J. ASPEN/SP PROCESS SIMULATION MODEL INPUT FILE FOR OPTION 5 -- FLUID COKING OF VACUUM BOTTOMS . . . . . J-1

TABLE OF CONTENTS
(Continued)

## APPENDICES - PART II (CONTINUED)

K. ASPEN/SP PROCESS SIMULATION MODEL INPUT FILE FOR OPTION 6 -- STEAM REFORMING OF NATURAL GAS FOR HYDROGEN PRODUCTION PLUS AN FBC UNIT . . . . . K-1

L. ASPEN/SP PROCESS SIMULATION MODEL INPUT FILE FOR OPTION 7 -- ADDITION OF A NAPHTHA REFORMER . . . . . L-1

M. ASPEN/SP PROCESS SIMULATION MODEL INPUT FILE FOR THE KINETIC REACTOR MODEL . . . . . M-1

N. ASPEN/SP FORTRAN USER BLOCK MODELS FOR THE KINETIC REACTOR MODEL . . . . . N-1

# 1. INTRODUCTION

This presents the Task V topical report. Task V concerns the development of an ASPEN process simulation model of the direct coal liquefaction complex baseline design and of several options.

The U. S. Department of Energy (DOE) has established a program to "foster an adequate supply of energy at a reasonable cost", in accordance with the National Energy Policy Plan IV (NEPP IV). A cost-effective direct coal liquefaction program sponsored by the Pittsburgh Energy Technology Center (PETC) is an integral part of NEPP IV.

The overall goal of the coal liquefaction program is "to develop the scientific and engineering knowledge base with which industry can bring economically competitive and environmentally acceptable advanced technology for the manufacture of synthetic liquid fuels from coal".

The present assignment from PETC is undertaken by Bechtel (in collaboration with Amoco as the main subcontractor) to develop a computer model for a baseline coal liquefaction design based on two-stage direct coupled catalytic reactors. Specifically, the scope of work calls for the development of:

1. A baseline design based on previous DOE/PETC results from the Wilsonville pilot plant and other engineering evaluations.

2. A cost estimate and economic analysis.

3. A computer model incorporating the above two steps over a wide range of capacities and selected process alternatives.

This model will be an addition to DOE's capability for in-house assessment of improvements of technologies, related to direct liquefaction of coal. All of the underlying algorithms, computer code, and training necessary to operate and modify the model is provided under this contract.

Figure 1.1 shows schematically the baseline design basis for the ASPEN process simulation model.

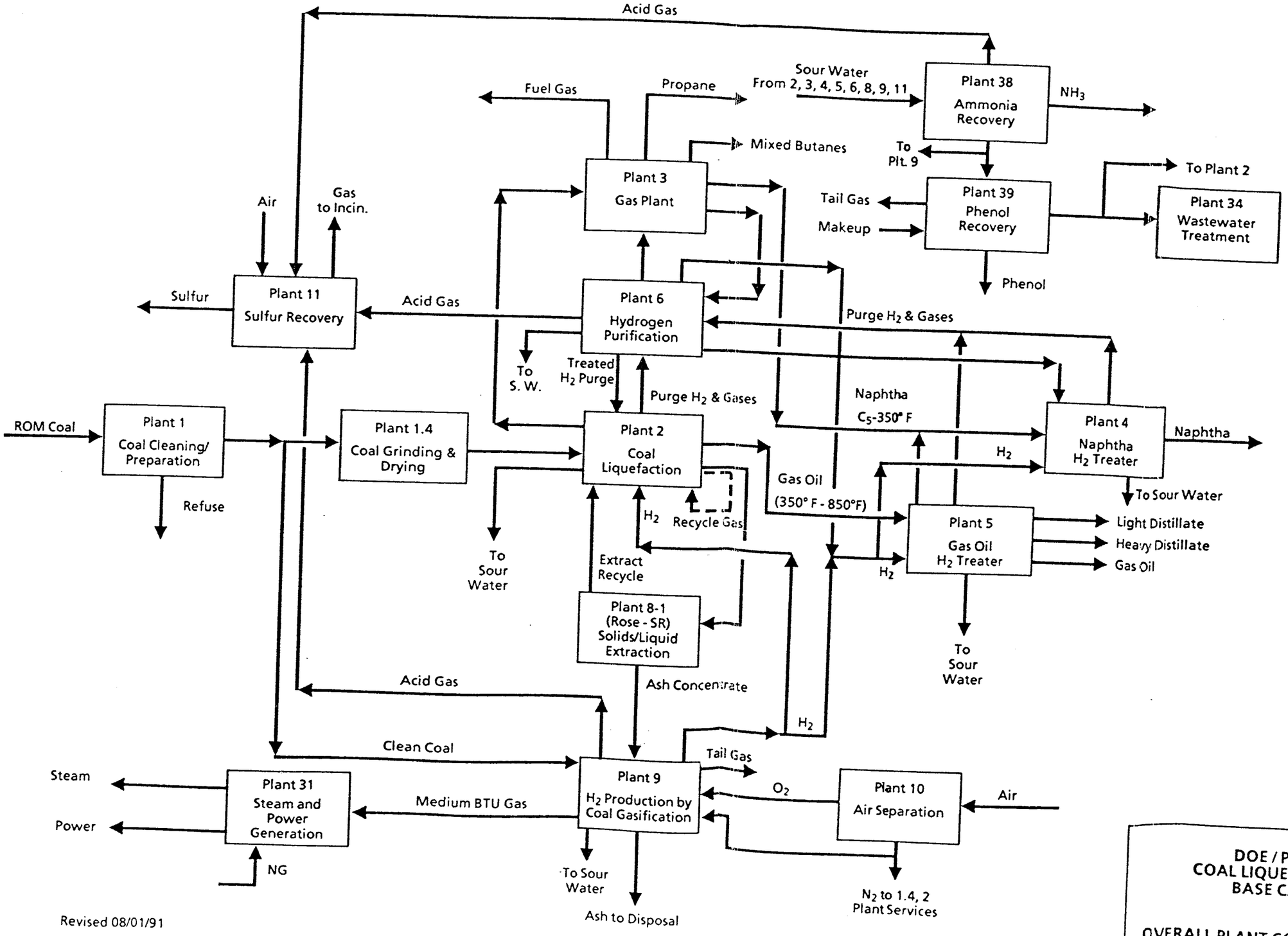


Revised 08/01/91

0891016-6

DOE / PETC
COAL LIQUEFACTION
BASE CASE

OVERALL PLANT CONFIGURATION
Figure 1.1

The model generates and reports complete material and utility balances for individual plants, and for the entire coal liquefaction complex. Included are utility requirements and capital costs for Plants 1 through 11, 38 and 39. Major equipment lists and specifications outlines may be generated for Plant 2 only. Plant 31 is modeled for utilities generation and operating expense calculations only. A separate LOTUS 123 spreadsheet model does a discounted cash flow economics analysis for the total complex in order to determine project economics.

The model is suitable for studying technology advances and other options in a case study approach, but does not feature optimization capabilities. The economics model is a stand-alone Lotus 2.2 spreadsheet which has been designed to accept input directly from the process simulation model or user supplied values.

# 2. EXECUTIVE SUMMARY

## 2.1 Task Summary

This presents the Task V topical report. Task V concerns the development of an ASPEN process simulation model of the baseline design. Table 2.1 contains a description of the individual subtasks as detailed in the Task I Management Plan. Task V was done in parallel with the development of mathematical algorithms and cost modeling work of Task IV.

Subtask 5010 called for setting up preliminary ASPEN files for standardizing components and pseudocomponents, enthalpy and K-value options, file numbering conventions, etc. Subtask 5020 involved construction of a simple base case model with preliminary block material and energy balances, to be improved and standardized in subtask 5030 to a format agreed upon by Bechtel and PETC.

Subtask 5040 dealt with verification of the internal consistency of the model against key parameters in the baseline design and/or Wilsonville data. For example, the model's prediction of heteroatoms removal versus coal conversion in the liquefaction plant hydrotreating reactors was verified. Additional data were gathered in subtask 5050 for modeling process options such as ash agglomeration, thermal first-stage reactor, vent gas separation, and others per the contract.

Subtask 5060 concerned improving iteratively the process blocks of the simple base case model in parallel with development of the base case design. In addition, development of a simple liquefaction plant kinetic model is a key objective in this subtask. Also, material and utility balances in the simple block modules were improved, and equipment lists and outline specifications reporting capability for Plant 2 was added in this subtask. In subtask 5070, all of the improved individual plant modules were assembled to complete the total plant simulation.

Subtask 5110 added elemental balance capabilities to the simulation model to account for carbon, hydrogen, nitrogen, sulfur, and oxygen across each plant and for the total plant. Subtask 5210 provided the capability for case study of process options, using the data gathered in subtask 5050.

Subtasks 5310 and 5320 dealt with the development and testing via Fortran blocks in the simulation model of capital cost predictions with algorithms developed in Task 4 for minimum/maximum size, number of trains, etc. Standardized output format was also developed here.

Subtasks 5410 and 5420 involved the development of an economic report module to provide complete project economics based on the economic assumptions specified in the RFP. Subtask 5420 was to have integrated capital and operating cost information into

cost algorithms of an economic model within the process simulation, but PETC agreed to change the scope of these subtasks.

Instead of integrating the economics module into the simulation model as outlined in the Task 1 Management Plan, a separate Lotus spreadsheet program generates economics reports from simulation model results and user-specified economic assumptions. The simulation model only contains equipment sizing algorithms for the coal liquefaction plant, Plant 2. However, based on curve cost estimation techniques, the simulation model generates complete capital and operating cost information for the entire complex to be input into the spreadsheet economics model. The spreadsheet does a detailed discounted cash flow analysis based on user supplied economic parameters to generate the required project economics.

Subtasks 5900, 5910, and 5920 cover the preparation, review, and issuance of this topical report for Task 5.

## 2.2 Model Summary

The complete modeling package that was developed under this project was designed to be a research guidance tool, and not a detailed process design tool. It was designed to predict the effects of various process and operations changes on the overall plant material and utility balances. It also predicts the effects on the capital cost and operating labor.

A separate LOTUS spreadsheet economics model was developed that does a discounted cash flow analysis of the project taking results directly from the process simulation model output to calculate project economics.

Figure 2.1 shows a simplified user input-output diagram of the various computer models used in this project, and how they interact with each other. The ASPEN/SP process simulation model is the heart of the modeling system. Although this model resides in a detailed process simulation model, many simplifying assumptions and approximations were made to keep the model manageable and still satisfy the requirements, of being a research guidance tool, and not a design tool. If detailed process simulation models for design were developed, the system would have become unmanageable and have required excessive computer facilities.

The ASPEN/SP process simulation model is based on the detailed plant designs developed by Bechtel for the baseline design. Fortran user block models are used to simulate most of the plant, and predict their utilities consumptions, labor requirements and capital costs. Results are available in several forms including the normal ASPEN/SP reports, specific plant summary reports, and an overall management summary report. A small output file also is generated for transferring the key process simulation model results to the LOTUS spreadsheet economics model.

A PIMS LP model was used to develop product values and syncrude premiums for the LOTUS spreadsheet economics model by simulating a typical PAD II refinery. Other alternate refinery operating scenarios can be studied by this method to develop representative syncrude values. These syncrude values are manually transferred to the spreadsheet economics model.

The LOTUS spreadsheet economics model takes the results from the other two models along with user supplied economic parameters and does a complete discounted cash flow analysis. This spreadsheet will generate the net present value of the project at a specified internal rate of return on equity. It also can be used to calculate what crude oil price is required to obtain a specific internal rate of return. In addition, this spreadsheet model allows studying the effects of other economic assumptions on project economics.

The basic process simulation model developed under this project simulates the baseline design. Seven optional cases also were simulated. These optional cases were simulated either by minor modifications to the basic ASPEN/SP input file, or by the use of a separate, but similar ASPEN/SP input file. The separate input files are required because these cases have different flowsheet logic which could not be blended into the basic simulation model input file.

FIGURE 2.1

## SIMPLIFIED USER INPUT - OUTPUT DIAGRAM FOR COMPUTER MODELS USED IN DIRECT COAL LIQUEFACTION STUDY

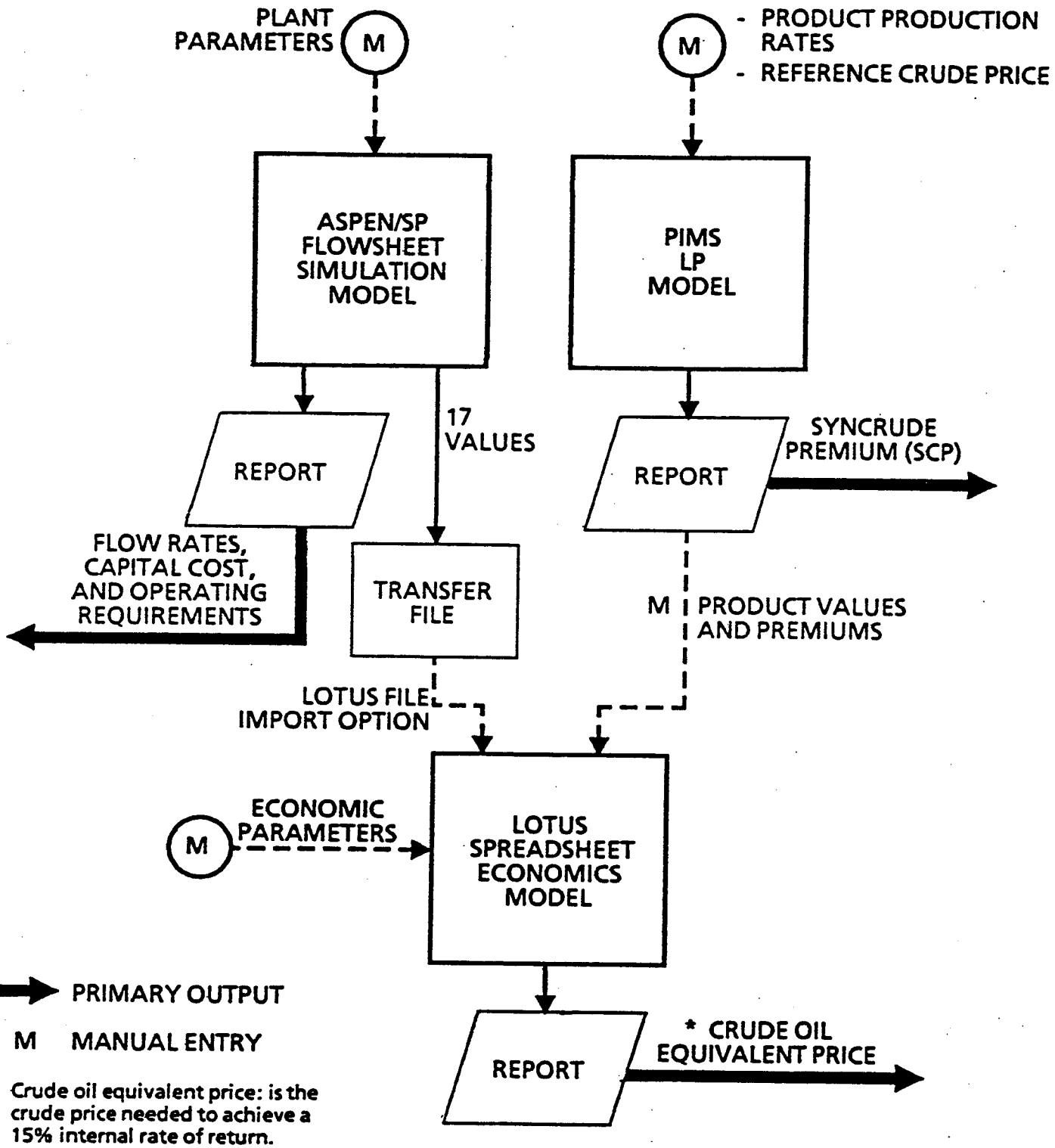


* Crude oil equivalent price: is the crude price needed to achieve a 15% internal rate of return.

## Table 2.1

## Task V Description

Task V concerns the development of an ASPEN process simulation model of the baseline design. The model produces complete material and utility balances for each plant and for the entire process complex. Utility requirements and capital costs are calculated for all process plants (Plants 1 - 11, 38 and 39). Each plant is in elemental balance. A companion Lotus 2.2 spreadsheet program uses simulation model output to generate discounted cash flow economics for the total complex based on user-specified economic assumptions.

This model is designed to study technology advances and options in a case study approach, but does not feature optimization capabilities. Following is a description of the individual subtasks of Task V.

| Subtask Number | Subtask Title | Description |
|---|---|---|
| 5010 | Set up ASPEN files and procedures | This task dealt with preliminaries such as standardizing component and pseudocomponents, enthalpy and K-Value options, ASPEN file numbering, etc. |
| 5020 | Simple ASPEN base case model | A simple ASPEN base case model was developed, analogous to the preliminary BFD of subtask 2030. Preliminary overall block material and energy balances were developed in this task and improved in subsequent tasks. |
| 5030 | Report material and energy balances | The material and energy balance output of the simple base case model was standardized to a format agreed upon by Bechtel and PETC. |
| 5040 | Compare model output with data | The internal consistency of the model was verified against key parameters in the baseline design and/or Wilsonville data. (For example, |

**Table 2.1 (continuation)**

| Subtask Number | Subtask Title | Description |
|---|---|---|
| 5040 | Compare model output with data (continuation) | heteroatoms removal versus coal conversion in the liquefaction plant hydrotreaters.) |
| 5050 | Assemble data on alternate process conditions | Data for alternative process options were gathered in this subtask preparatory to modeling these options. e.g., ash agglomeration, first-stage thermal reactor, vent gas separation, and others per contract. |
| 5060 | Improve process block modules | Process blocks of the simple base case were improved iteratively and in parallel with development of the baseline design. Material and energy balances were improved, and in addition a kinetic model of the coal liquefaction plant was developed. Major equipment list and outline specifications reporting capability was added. |
| 5070 | Assemble simulation model from modules | All plant modules were assembled to complete the total plant simulation model |
| 5110 | Add elemental balance capabilities | Stream elemental balances (carbon, hydrogen, nitrogen, oxygen, and sulfur) across each plant as well as the total plant were added. |
| 5210 | Model alternative process options | Data gathered in subtask 5050 were used to model alternative process options in a case study approach. |

**Table 2.1 (continuation)**

| Subtask Number | Subtask Title | Description |
|---|---|---|
| 5310 | Develop interface for capital cost algorithms | Capital cost algorithms developed in Task 4 were implemented in ASPEN algorithms via Fortran blocks. |
| 5320 | Complete capital cost module | Testing of the capital cost predictions module (versus algorithms, minimal train size, etc.) as well as standardizing the output format were done in this subtask. |
| 5410 | Develop economic report module | An economic module was developed to provide complete project economics. A discounted cash flow basis was utilized to determine the project IRR (Internal Rate of Return) based on economic assumptions specified in the RFP. The economic report format was reviewed with PETC. |
| 5420 | Interface with capital and operating cost algorithms | This task integrated capital and operating cost information into the cost algorithms economic module to provide a working economic module within the process simulation module. |
| 5900 | Draft topical report | A topical report covering development of the entire simulation module was prepared. |
| 5910 | Review Task topical | Draft topical report for Task 5 will be reviewed with PETC. |
| 5920 | Finalize and issue Task 5 topical report | The final topical report for Task 5 will be issued. |

# 3. PROCESS SIMULATION MODEL - BASELINE DESIGN

## 3.1 Overview

The baseline design configuration of the direct coal liquefaction complex is shown in Figure 3.1. It is modeled within the ASPEN/SP framework by an input file which calls Fortran user block models to simulate the various plants within the complex. A simplified block logic flow of the process simulation model of the baseline design is shown in Figure 3.2.

The objective of this modeling effort was to develop a process simulation model which could be used as a research guidance tool, and not to develop a detailed process design tool. This model was designed to predict the overall mass and utility balances for the complex and to interface with a LOTUS 123 spreadsheet to predict project economics. To satisfy this need, a process simulation model based on user Fortran blocks was developed to simulate the major input and output streams of each process plant, and estimate their utilities consumptions (or productions), dedicated operating labor and ISBL field cost. This process simulation model works in conjunction with a LOTUS 123 spreadsheet economics model for predicting project economics.

This chapter describes the ASPEN/SP process simulation model of the baseline design. This section provides a brief overview of the model. The next section discusses some features of a general nature that are common to the Fortran user block models. Section 3.3 describes the individual Fortran user block models for each plant. Section 3.4 describes the overall simulation model. Section 3.5 discusses the results for the baseline design case. Section 3.6 provides detailed instructions for running the model.

The Fortran user block model technique was selected because it avoids supplying large amounts of input information required by the standard ASPEN/SP models and shortens the simulation execution time. This also avoids supplying process information required by the ASPEN/SP models that is not available for the proprietary plants in the complex (e.g., the ROSE-SR process).

The user may simulate individual plants or combinations thereof by specifying the input parameters required by the models, and modifying and/or combining input files to properly connect interplant streams. By setting only the appropriate input file parameters, output reports may be customized to include elemental balances, overall material balances, utilities requirements, capital and operating costs, and economic analyses for the individual plants, or for the entire complex. It should not be necessary to modify the Fortran user block models to simulate the baseline design.

All of the plant models in the baseline design simulation compute and report the product rates leaving a particular process plant based on the entering feed. Utility consumptions (or productions), operator requirements and capital costs also are calculated as a function of plant capacity. However, in these calculations plant capacity may not be expressed

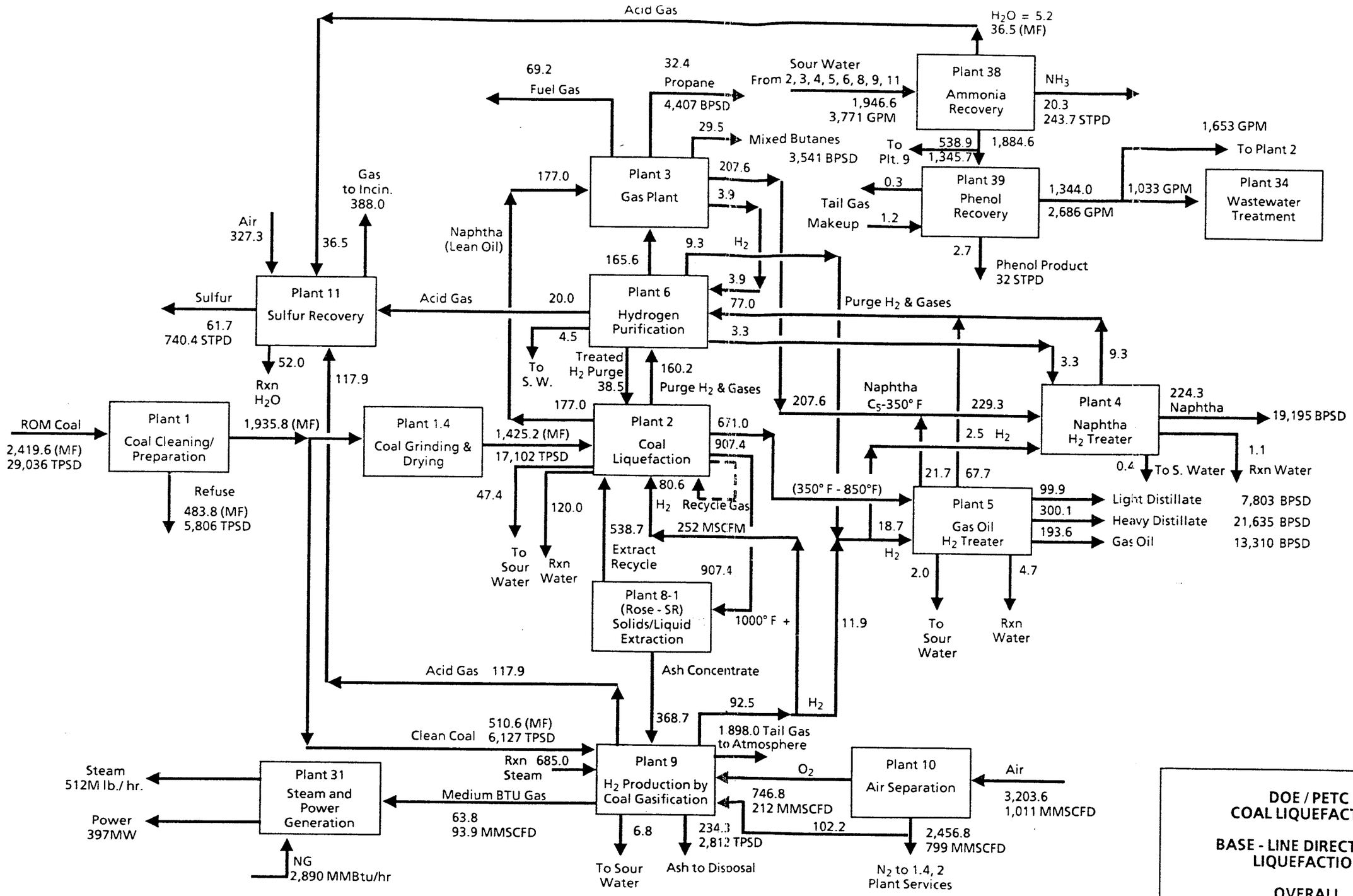


Revised 11/26/91

1291048-2

Notes:

1. Flow rates are in MLB/HR unless noted and on dry basis
2. Simplied water flow distribution diagram is shown on Figure 41.1
3. Minor streams including steam, water, sour water, and make-up amine are not shown on this diagram
4. Flow rates around plants #38, 39, 34 are shown on wet basis

**DOE / PETC**
**COAL LIQUEFACTION**

**BASE - LINE DIRECT COAL LIQUEFACTION**

**OVERALL MATERIAL BALANCE**

**Figure 3.1**

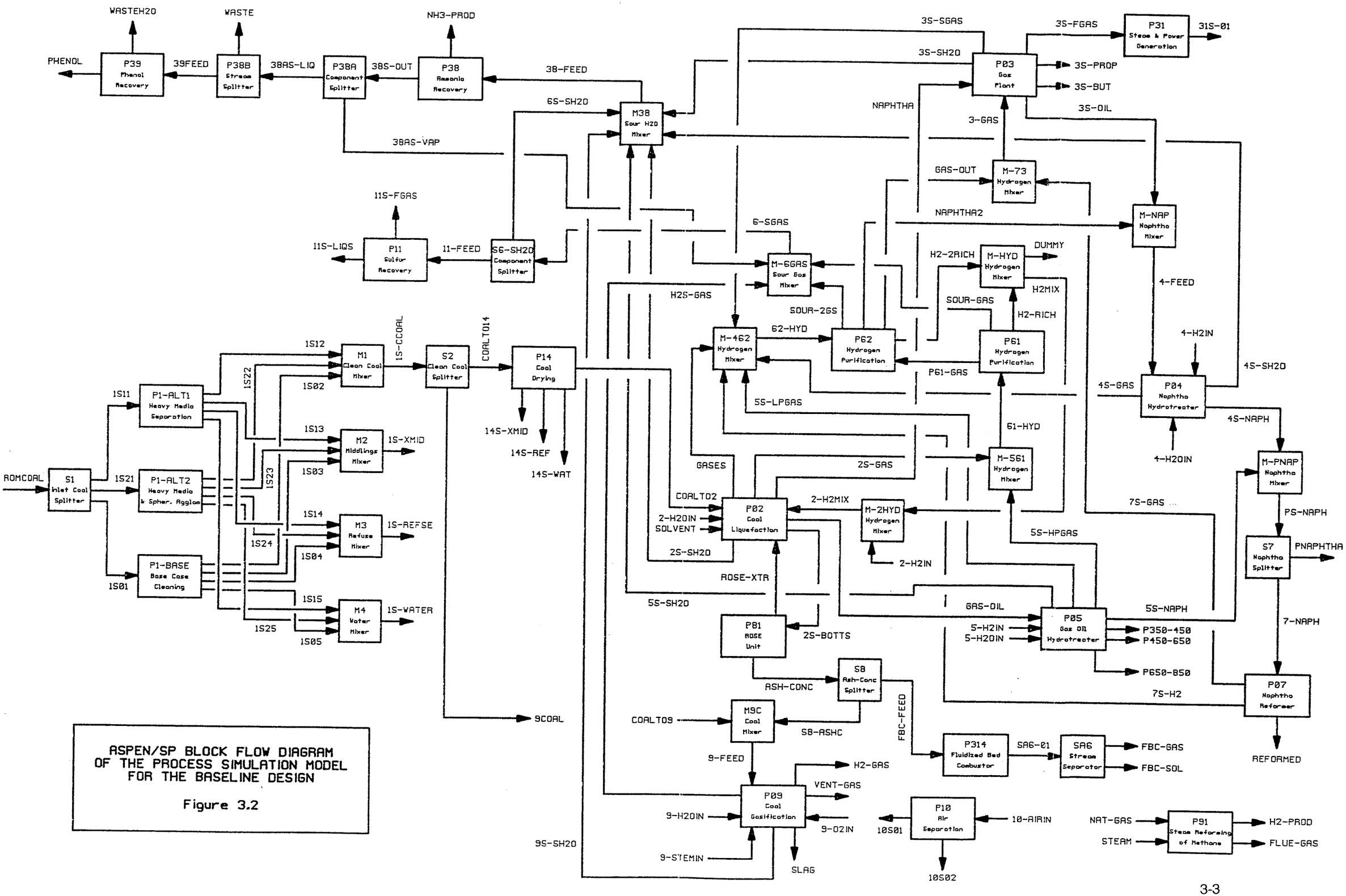


ASPEN/SP BLOCK FLOW DIAGRAM OF THE PROCESS SIMULATION MODEL FOR THE BASELINE DESIGN

Figure 3.2

in terms of feed rate, but in terms of a key feed or product rate; for example, the capacity of Plant 9, the hydrogen production by coal gasification plant, is expressed in MMSCF per hour of hydrogen produced.

However, an alternate Plant 2 model has been developed that contains kinetic equations which compute the compositions and rates of the product streams and size requirements of the coal liquefaction reactors based on the reaction conditions specified in the input file. This Plant 2 kinetic model is to be used to obtain more information on the coal liquefaction reactor operations. It is discussed in volume 2 of this report. It has not been integrated into the baseline design simulation in order to keep the simulation manageable in a PC environment.

Each Fortran user block model is elementally balanced with respect to five elements; carbon, hydrogen, nitrogen, oxygen and sulfur. Elemental balance reports are not printed in the normal model output files, but they can be printed to the standard ASPEN/SP history file, if requested.

Each Fortran user plant model has the capability to branch to other Fortran routines containing algorithms which are common to all the plants. These subroutines calculate and save utilities requirements, capital and operating costs, dedicated operating labor requirements, etc. for each plant, and generate reports according to the input file instructions.

The ASPEN/SP program was modified to predict costs of individual plant sections or groups of equipment as functions of capacity for Plant 2 only. This allows the total cost of each plant to be determined based on the duplicate equipment parameters set by the user. Another modification enabled ASPEN/SP to compute overall elemental balances in addition to its component balance capability. These options are being implemented in Version 8 of ASPEN/SP.

### 3.2 Fortran Blocks and Fortran User Block Models

Fortran blocks allow the user to insert his own Fortran statements into the flowsheet computations within the ASPEN/SP framework. Among a large number of uses for these are feed forward control, interactive simulations, setting make-up stream flow rates, performing auxiliary calculations, generating data files for use by other parts of the simulation, and printing customized reports.

Fortran user block models are user-designed simulations that may be substituted for ASPEN/SP unit operation models, or to simulate processes not available within ASPEN/SP. In this modeling effort, Fortran user block models have been developed to simulate entire plants, such as the naphtha hydrotreater.

Both techniques are used extensively within this model to avoid supplying much greater amounts of input information required by the standard ASPEN/SP unit operation models, and to shorten execution times of the simulations. This also avoids supplying process information required by the ASPEN/SP unit operation models that is not available for the proprietary plants in the complex (e.g., the ROSE-SR process).

### 3.2.1 General Features

Each Fortran user block model contains equations which simulate the chemical reactions, separations, utilities requirements, etc., for a particular plant from the parameters specified in the input files. These equations require that certain streams and components be specified, consistent with that model's requirement. Streams and components that may be inadvertently omitted or set by a user, e.g. an ethane component not specified, or a flow of solids stipulated in the feed to the gas plant, will halt execution of the simulation and cause the appropriate error messages to be reported in the ASPEN/SP history file.

Each model contains the following sections:

1. Introductory description and comments
2. Common statements
3. Local variable declaration statements and descriptions
4. Parameter initialization
5. Input
6. Process calculations
7. Report

The parameter initialization and input sections set up the required information from the feed stream(s) and model parameters for use in the sections that follow it. The calculations section simulates this plant and calculates the output stream compositions and flow rates.

The report section is divided into three subsections, a stream report section, a utilities consumption section, and a capital cost section. By use of an integer input parameter, the user can control whether to print the complete user block summary report or selected portions of the report, or to bypass report printing altogether.

Although each model was developed specifically for the direct coal liquefaction facility simulation, several features were included so that they may be easily adapted to and used in other ASPEN/SP simulations. Each model consists of one or more Fortran subroutines the name of which is limited to six characters, beginning with the letters USR followed by the plant number. A letter suffix is added if more than one subroutine is required. For example, the model for plant 10 is called USR10.FOR, and the first subroutine in it is named USR10A.FOR. The first subroutine in the plant 8.1 model would be named USR81A.FOR.

ASPEN/SP requires that all input and output streams to and from a model be of the same stream class. Each model has been programmed to work with an input stream consisting of a conventional component sub-stream and an second sub-stream of non-conventional components of ASPEN/SP stream class MIXNC or MIXNCPSD. However, those plant models which require only conventional components, such as the air separation plant, also will function correctly when the input stream or streams contain only one sub-stream of conventional components.

When a non-conventional component sub-stream is present, these plant models require that each non-conventional component have the following four component attributes,

PROXANAL, ULTANAL, SULFANAL and AOXANAL. These component attributes must be specified in the above order for each non-conventional component in an ATTR-COMPS sentence, such as the one that follows for the non-conventional component COAL:

ATTR-COMPS COAL PROXANAL ULTANAL SULFANAL AOXANAL

When specific components are used in a plant model, the Fortran block model for that plant has been programmed to locate these components by name, up to a maximum of 100 conventional components. Therefore, they must be identified by the same name in the ASPEN/SP input file as used in the direct coal liquefaction facility simulation. If the model cannot locate a required component by name, an error message will be written to the history file and execution will be terminated.

For example, the Fortran block model of the air separation plant requires two key components, oxygen and nitrogen. Therefore, this model has been programmed to locate these components by searching the component list for these component names to determine their relative component numbers and save them in local variables. Thus, if this model is to be used in another simulation which uses a different component ordering, these components only have to be specified with the same names in the ASPEN/SP input file.

### 3.2.2 Process Calculations

The process calculations section in each Fortran user block differs depending on the plant being simulated. While any of the seventy REAL input parameters discussed in the following subsections may be changed by the user, only the first twenty are process-specific, i.e., values that the user may normally change in the input file specifications. These are reserved for process related items, such as conversions and separation ratios. Additional information on these parameters is provided in the subsections below which describe the individual plant models. The remaining REAL parameters control utilities consumptions, etc., and normally they are not changed in the input files.

Each output stream leaving every Fortran user block model is set to a default temperature of 70 °F and a default pressure of 15 psia. These values can and should be changed to more appropriate values for the specific simulation by the use of a FLASH-SPECS sentence in the block paragraph which calls the user Fortran block model. Any outlet stream conditions specified in the FLASH-SPECS sentence will override the default values set in the Fortran user block model. For example, the following FLASH-SPECS sentence will set the outlet temperature of the FLUE-GAS stream to 110 °F and 50 psia and cause ASPEN/SP to calculate the appropriate properties (enthalpy, entropy, etc.) at these conditions.

FLASH-SPECS STRM = FLUE-GAS KODE = 2 TEMP = 100 PRES = 50

### 3.2.3 Utilities Calculations

Since each of these plants is being modeled by a single Fortran user block model, little useful additional information can be gained by an enthalpy balance calculation around the entire plant. Instead, the models have been programmed to calculate the following eleven plant utilities requirements.

1. Power consumption in kilowatts
2. 900 psig / 750 F steam consumption in Mlbs/hour
3. 900 psig saturated steam consumption in Mlbs/hour
4. 600 psig / 720 F steam consumption in Mlbs/hour
5. 600 psig saturated steam consumption in Mlbs/hour
6. 150 psig saturated steam consumption in Mlbs/hour
7. 50 psig steam saturated consumption in Mlbs/hour
8. Fuel consumption in MM BTU/hour
9. Cooling water consumption in Mgal/hour
10. Process water consumption in Mgal/hour
11. Nitrogen consumption in MM SCF/hour

If desired, additional utility consumptions (or productions) can be added. Such additional utilities might be condensate, boiler feed water or a medium pressure steam.

Each plant's utility requirement is calculated as a linear function of its key flow rate. This may be either the total flow rate of a specific feed or product stream, or the flow rate of the major component in a specific feed or product stream. For example, the key flow rate for the coal cleaning plant is the clean coal product stream rate in Mlbs/hr, and the key flow rate for the hydrogen plants is the useable hydrogen production rate (flow rate of hydrogen in the hydrogen-rich product gas stream) in MM SCF/hr of hydrogen. Utilities requirements are calculated by equation 3.1.

$$U_i = A_i + B_i * F_O \qquad \text{(Eq. 3.1)}$$

Where:

$i$ = Subscript designating a specific utility in the above listed order

$U_i$ = Consumption of utility i

$F_O$ = Total key flow rate for all duplicate plants in appropriate units, such as MM SCF/hour or Mlbs/hour

$A_i$ = Constant for the calculation of utility i

$B_i$ = Constant for the calculation of utility i

The sign convention used for all utilities is that positive values represent utilities that are imported to (consumed by) the plant, and negative values represent utilities that are exported from (produced by) the plant.

The numerical values for the $A_i$ and $B_i$ parameters for each utility are input parameters to each Fortran user block model. The user supplied parameters for the utilities calculations are REAL parameters 21 through 42. REAL(21) and REAL(22) are the A and B constants for the power consumption, respectively. REAL(23) and REAL(24) are the A and B constants for the 900 psig / 750 F steam consumption, respectively. Similarly, REAL(25) and REAL(26) are for the 900 psig saturated steam consumption; REAL(27) and REAL(28) are for the 600 psig / 720 F steam consumption; REAL(29) and REAL(30) are for the 600 psig saturated steam consumption; REAL(31) and REAL(32) are for the 150 psig saturated steam consumption; REAL(33) and REAL(34) are for the 50 psig saturated steam consumption; REAL(35) and REAL(36) are for the plant fuel consumption; REAL(37) and REAL(38) are for the cooling water consumption; REAL(39) and REAL(40) are for the process water consumption; and REAL(41) and REAL(42) are for the nitrogen consumption.

All utility parameters must be on a consistent basis with the values for any unit specific parameters which are supplied for the process calculation section.

### 3.2.4 Operating Labor

Dedicated operating labor for each process plant is calculated as a linear function of the number of operating trains or plants. An equation similar to Equation 3.1 is used to calculate the number of dedicated operators and boardmen for each process. No dedicated operators are allowed for a spare plant. After the number of dedicated operators for the entire complex have been determined, the total operators for the entire complex are calculated by applying a factor to account for the extra and OSBL operators.

For example, if a single coal liquefaction plant train of Plant 2 requires eight dedicated operators per day, then the complete five operating train plant would require five times as many dedicated operators or forty operators per day.

The numerical values for the $A_i$ and $B_i$ parameters for the dedicated operating labor are input parameters to each Fortran user block model. Parameter REAL(49) is the constant factor for the number of dedicated plant operators per day, and REAL(50) is the number of dedicated plant operators per day per operating train. The number of extra and OSBL operators per dedicated plant operator is set as variable XOF (Extra Operator Function) in Fortran block SUMMARY.

### 3.2.5 Capital Costs

The ISBL field cost for each plant is calculated as a function of plant capacity. When the total ISBL field costs for all plants in the complex are known, the total capital cost of each plant and the complex, are calculated by allocating an appropriate amount of OSBL, home office, engineering, and contingency costs to each plant based on the total ISBL field costs of all the individual plants in the complex.

The ISBL field cost for each plant is calculated as a function of the key flow rate by Equations 3.2 through 3.4. The key flow rate may be either the total flow rate of a specific feed or product stream or the flow rate of the major component in a specific feed or product stream. For example, the key flow rate for the coal cleaning plant is the clean

coal product stream rate in Mlbs/hr, and the key flow rate for the hydrogen plants is the useable hydrogen production rate (flow rate of hydrogen in the hydrogen-rich product gas stream) in MM SCF/hr of hydrogen.

$$COST = FCOST + (N - 1) * SCOST \quad \text{(Eq. 3.2)}$$

$$FCOST = A + B * ( F_O / (N * RF_O) )^E \quad \text{(Eq. 3.3)}$$

$$SCOST = F * FCOST \quad \text{(Eq. 3.4)}$$

Where:

COST = Total ISBL field cost of all duplicate trains

FCOST = ISBL field cost of the first train

SCOST = ISBL field cost of each subsequent duplicate train after the first one

N = Total number of duplicate trains, including spares

$F_O$ = Total key flow rate of all duplicate trains in appropriate units, such as MM SCF/hour or Mlbs/hour

$RF_O$ = Reference key flow rate of a single train in appropriate units, such as MM SCF/hour or Mlbs/hour. This flow rate is used to scale the ISBL field cost of a single train as a function of train capacity

A, B, E and F = Constants for the calculation of the ISBL field cost of a single train as a function of train capacity

In the above capital cost equation, constant A is the fixed ISBL field cost associated with a single train. The sum of constants A and B is the ISBL field cost of a single train of capacity $RF_O$. Thus, constant B is the variable ISBL field cost of a single train of capacity $RF_O$. Constant E is the train cost scaling exponent. Constant F is the cost reduction factor for the construction of duplicate trains after the first one.

The Fortran user block model will calculate the required number of duplicate trains or operating units in the plant from the total plant capacity and the specified maximum and minimum single train capacities. However, each Fortran user block model allows the user to specify the number of operating duplicate trains as an input parameter. When this number is supplied, that value will be used, and the calculation of the number of duplicate operating trains will be bypassed.

When the maximum capacity of a single operating train within a plant is not specified (i.e.; a zero or negative value is supplied), the total ISBL field cost will be calculated based on a single train.

The numerical values for the plant costing parameters, number of duplicate operating trains, and number of spare trains are input parameters to each Fortran user block model. Parameter INT(3) is the specified number of duplicate operating trains, excluding spares, and parameter REAL(58) is the number of spare trains. If INT(3) has a value of zero, the number of duplicate operating trains will be calculated based on the specified maximum capacity of a single train. If INT(3) has a positive value, that value will be the number of duplicate operating trains that will be used to calculate the total ISBL field cost.

Parameter REAL(51) is the reference capacity of a single operating train for the calculation of the ISBL field cost, expressed as the key flow rate in MM SCF/hour or Mlbs/hour. Parameters REAL(52) and REAL(53), respectively, are the maximum and minimum capacities of a single operating train for which these costing parameters are applicable, expressed in the same manner as parameter REAL(51). Parameters REAL(54) through REAL(57) set the A, B, E and F parameters in equations 3.3 and 3.4 for the calculation of the total ISBL field cost of the plant as a function of capacity. The units of all REAL plant cost parameters, Mlbs/hr, etc., must be consistent with the REAL parameters specified for process calculations.

### 3.2.6 Error Checking and Warning Messages

The Fortran user block models may contain some model specific error checking procedures and warning messages which may be printed in the user model report besides those described in the previous capital cost calculations section. In general, error checking procedures have been implemented to test for:

1. The required number of inlet streams
2. The required number of outlet streams
3. Missing required components
4. Solids present in input streams which should not contain any solids
5. Obviously erroneous user supplied parameters

Whenever possible, appropriate corrections are made to allow the model to run. Appropriate error or warning messages are written to the history file and/or, if appropriate, to the plant summary report.

Warning messages will be printed in the cost section of the plant summary report if either the calculated capacity of a single train is below the specified minimum capacity, or if the calculated capacity of a single train is above the specified maximum capacity of a single train.

### 3.2.7 Input Parameters

The ASPEN/SP program allows values to be passed to and from Fortran user block models via parameters specified in the input files. There are two types of parameters, integer and real (floating point). The NINT= phrase of the PARAM sentence in the input file specifies the number of integer parameters, and the NREAL= phrase specifies the number real parameters. The values of the integer parameters are specified in the INT sentence, and the values of the real parameters are specified in the REAL sentence.
The Fortran user block model will calculate the required number of duplicate trains or operating units from the total plant capacity and the specified maximum and minimum single unit capacities. However, each Fortran user block model allows the user to specify the number of operating duplicate plants as an input parameter. When the number of operating duplicate plants is supplied as an input parameter, that value will be used, and the calculation of the number of operating duplicate plants will be bypassed.

When the maximum capacity of a single train or operating unit within a plant is not specified (i.e., a zero or negative value is supplied), the total plant cost will be calculated based on a single unit. Operating labor requirements are calculated as a function of the number of units in each plant.

Table 3.1 describes the input parameters which are common to all of the Fortran user block models. The models have at least four integer input parameters and up to 70 real input parameters. Additional information on these parameters is provided in the subsections below which describe the individual plant models.

All of the Fortran user block models have four common integer input parameters, INT(1) through INT(4). The first integer parameter, INT(1), is the user block summary report control switch which controls the printing of the three sections of the user block summary report. When INT(1) has a value of zero, all three sections of the summary report are printed. When it has a value of one, only the stream report and utilities report sections are printed. When it has a value of two, only the stream report section is printed. When it has a value of three or more, the entire user block model summary report is not printed.

The second integer parameter, INT(2), is the user Fortran block summary report destination control switch. When INT(2) has a value of zero, the summary report will be written to the normal ASPEN/SP report file. When it has a value of one, the user block summary report will be written to a separate summary report file for each plant. This file name will begin with the letters DCL followed by some numbers and possibly some letters to identify the specific plant or option, and have a filespec of REP. Thus, the separate summary report file for Plant 1 is DCL01.REP; the separate report file for Plant 4 is DCL04.REP, and that for Plant 10 is DCL10.REP.
Consequently, files DCL01B.REP, DCL01A1.REP and DCL01A2.REP are the separate plant summary report files for the three Plant 1 coal cleaning options with the DCL01B.REP file being used for the baseline design case and the A1 and A2 files being used for the two alternate cases.

## Table 3.1

## General Fortran User Block Model Input Parameters

| Parameter | Description |
|---|---|
| **Integer Parameters** | |
| INT(1) | User block summary report control switch.<br>0 => Write the complete user block summary report.<br>1 => Skip the capital cost portion of the summary report.<br>2 => Skip the capital cost and utilities portions of the summary report.<br>3 => Skip writing the entire user block summary report. |
| INT(2) | User block summary report destination control switch.<br>0 => Write the user block summary report to the normal ASPEN/SP output report file.<br>1 => Write the user block summary report to a separate user block output report file. |
| INT(3) | Number of operating duplicate trains, excluding spares.<br>If INT(3) = 0, the minimum number of operating duplicate trains, excluding spares, will be determined so that the capacity of each train does not exceed the maximum train capacity specified by parameter REAL(52).<br>If INT(3) > 0, the number of operating duplicate trains, excluding spares. |
| INT(4) | History file additional output control switch.<br>0 => Write no additional output to the history file.<br>1 => Write only the subroutine entry and exit messages to the history file.<br>2 => Write some additional output to the history file.<br>3-5 => Write some more additional output to the history file. Larger values will generate more additional output. |
| **Real Parameters** | |
| REAL(1)-REAL(20) | Model specific parameters. These parameter locations are reserved for items which are specific to each Fortran user block model, such as conversion, component distribution factors, etc. |
| REAL(21) | Constant factor for the power consumption, kw. |
| REAL(22) | Power consumption per CAP unit, kw/(CAP units). |
| REAL(23) | Constant factor for the 900 psig / 750 F steam consumption, Mlbs/hr. |
| REAL(24) | 900 psig / 750 F steam consumption per CAP unit, (Mlbs/hr)/(CAP units). |
| REAL(25) | Constant factor for the 900 psig saturated steam consumption, Mlbs/hr. |
| REAL(26) | 900 psig saturated steam consumption per CAP unit, (Mlbs/hr)/(CAP units). |

- Continued on Next Page -

## Table 3.1 (Continued)

### General Fortran User Block Model Input Parameters

| Parameter | Description |
|---|---|
| REAL(27) | Constant factor for the 600 psig / 720 F steam consumption, Mlbs/hr. |
| REAL(28) | 600 psig / 720 F steam consumption per CAP unit, (Mlbs/hr)/(CAP units). |
| REAL(29) | Constant factor for the 600 psig saturated steam consumption, Mlbs/hr. |
| REAL(30) | 600 psig saturated steam consumption CAP unit, (Mlbs/hr)/(CAP units). |
| REAL(31) | Constant factor for the 150 psig saturated steam consumption, Mlbs/hr. |
| REAL(32) | 150 psig saturated steam consumption per CAP unit, of hydrogen (Mlbs/hr)/(CAP units). |
| REAL(33) | Constant factor for the 50 psig saturated steam consumption, Mlbs/hr. |
| REAL(34) | 50 psig saturated steam consumption per CAP unit, (Mlbs/hr)/(CAP units). |
| REAL(35) | Constant factor for the plant fuel consumption, MM BTU/hr. |
| REAL(36) | Plant fuel consumption per CAP unit, (MM BTU/hr)/(CAP units). |
| REAL(37) | Constant factor for the cooling water consumption, Mgal/hr. |
| REAL(38) | Cooling water consumption per CAP unit, (Mgal/hr)/(CAP units). |
| REAL(39) | Constant factor for the process water consumption, Mgal/hr. |
| REAL(40) | Process water consumption per CAP unit, (Mgal/hr)/(CAP units). |
| REAL(41) | Constant factor for the nitrogen consumption, MM SCF/hr. |
| REAL(40) | Nitrogen consumption per CAP unit, (MM SCF/hr)/(CAP units). |
| REAL(42) REAL(48) | Future use. |
| REAL(49) | Constant factor for the number of dedicated operators per day. |
| REAL(50) | Number of dedicated operators per day per operating train. |
| REAL(51) | Reference capacity of a single train as defined by the key flow rate in CAP units for the calculation of the ISBL field cost of a single train as a function of train capacity. |
| REAL(52) | Maximum size of a single train as defined by the key flow rate in CAP units. |
| REAL(53) | Minimum size of a single train as defined by the key flow rate in CAP units. |
| REAL(54) | Constant A in the plant ISBL field cost equation, the fixed capital cost of a single plant in MM $. |
| REAL(55) | Constant B in the plant ISBL field cost equation, the variable capital cost of a single plant having the key flow rate specified in variable REAL(51) in MM $. |
| REAL(56) | Constant E in the plant ISBL field cost equation, the plant cost scaling exponent. |
| REAL(57) | Constant F in the plant ISBL field cost equation, the cost reduction factor for the construction of duplicate trains after the first one. |
| REAL(58) | Number of spare trains. |

- Continued on Next Page -

## Table 3.1 (Continued)

## General Fortran User Block Model Input Parameters

| Parameter | Description |
|---|---|
| REAL(59) - REAL(70) | Future use. |

NOTE: The plant capacity as used in the various calculations is defined as a key flow rate. This key flow rate may be either the total flow rate of a specific stream or the flow rate of the main component in a specific stream. This flow rate is expressed in an appropriate set of units such as MM SCF/hr, Mlbs/hr, or MM SCF/hr of hydrogen. In this generalize table, this set of units is called CAP units since the key flow rate item and appropriate units are not known.

The third integer parameter, INT(3), is the number of operating duplicate trains, excluding spares. When INT(3) has a positive value, it is the number of operating duplicate trains that will be used in the calculation of the ISBL field cost of the plant. When INT(3) is zero, the number of operating duplicate trains will be calculated based on the specified maximum train capacity given in parameter REAL(52).

The fourth integer parameter, INT(4), controls how much additional information is written to the history file for debugging purposes. When INT(4) has a value of zero, no information except any warning or error messages are written to the history file. When INT(4) has a value of one or greater, some additional information will be written to the history file. In general, the amount of information written to the history file increases as the value of INT(4) increases. Normally, INT(4) should be set either to zero so that no additional information is written to the history file, or to one so that only the master subroutine entry and exit messages are written to the history file.

The first twenty REAL (floating point) parameters, REAL(1) through REAL(20), are used to specify the conversions, component distributions, etc. necessary for the calculation of the output stream flow rates and compositions in each model.

The next twenty-eight REAL parameters, REAL(21) through REAL(48), are used to calculate the utilities consumptions or productions for this plant as a linear function of the plant capacity expressed as the flow rate of a key stream.

The next two REAL parameters, REAL(49) and REAL(50), are used to calculate the number of dedicated plant operators per day as a function of the number of operating plants or trains.

The next 10 REAL parameters, REAL(51) through REAL(60), are used to calculate the number of duplicate operating units, the capacity of each, and the total ISBL field cost of the entire plant.

The final 10 REAL parameters, REAL(61) through REAL(70), are reserved for future use.

The models require that the ASPEN/SP input file contain some or all of the components shown in Table 3.2. However, the components may be present in any order, and any component may have a zero flow rate. The model will print a warning message and terminate execution if any of the required component(s) is not specified in the input file. The discussions in the subsections below for each process model will note those components that need not be specified, i.e., exceptions to the complete list shown in Table 3.2.

All the Fortran user block models require that the input and output streams must be of one of the following ASPEN/SP stream classes, Conventional, MIXNC, or MIXNCPSD ASPEN/SP. All input and output streams to each model must be of the same ASPEN/SP stream class. The stream entering and leaving those models using solids must be of either the MIXNC or MIXNCPSD stream class. In the ATTR-COMPS statement, required for these two stream classes, the items PROXANAL, ULTANAL, SULFANAL, and

## Table 3.2

## ASPEN/SP Input File--Complete Components List

| ASPEN/SP Short Component Name | Full Component Name |
|---|---|
| H2 | Hydrogen |
| N2 | Nitrogen |
| O2 | Oxygen |
| H2S | Hydrogen sulfide |
| NH3 | Ammonia |
| H2O | Water |
| CO | Carbon monoxide |
| CO2 | Carbon dioxide |
| HCL | Hydrogen chloride |
| COS | Carbonyl sulfide |
| CH4 | Methane |
| C2H6 | Ethane |
| C3H8 | Propane |
| IC4H10 | Iso-butane |
| NC4H10 | Normal butane |
| IC5H12 | Iso-pentane |
| NC5H12 | Normal pentane |
| T125 | 100-150 F material leaving Plant 2 |
| T175 | 150-200 F material leaving Plant 2 |
| T225 | 200-250 F material leaving Plant 2 |
| T275 | 250-300 F material leaving Plant 2 |
| T325 | 300-350 F material leaving Plant 2 |
| T375 | 350-400 F material leaving Plant 2 |
| T425 | 400-450 F material leaving Plant 2 |
| T475 | 450-500 F material leaving Plant 2 |
| T525 | 500-550 F material leaving Plant 2 |
| T525 | 550-600 F material leaving Plant 2 |
| T625 | 600-650 F material leaving Plant 2 |
| T675 | 650-700 F material leaving Plant 2 |
| T725 | 700-750 F material leaving Plant 2 |
| T775 | 750-800 F material leaving Plant 2 |
| T825 | 800-850 F material leaving Plant 2 |
| T875 | 850-900 F material leaving Plant 2 |
| T925 | 900-950 F material leaving Plant 2 |
| T975 | 950-1000 F material leaving Plant 2 |
| T1000+ | 1000+ F material leaving Plant 2 |
| P125 | Hydrotreated 100-150 F material |
| P175 | Hydrotreated 150-200 F material |
| P225 | Hydrotreated 200-250 F material |
| P275 | Hydrotreated 250-300 F material |
| P325 | Hydrotreated 300-350 F material |
| P375 | Hydrotreated 350-400 F material |
| P425 | Hydrotreated 400-450 F material |
| P475 | Hydrotreated 450-500 F material |
| P525 | Hydrotreated 500-550 F material |

- Continued on Next Page -

## Table 3.2

## ASPEN/SP Input File--Complete Components List

| ASPEN/SP Short Component Name | Full Component Name |
|---|---|
| P575 | Hydrotreated 550-600 F material |
| P625 | Hydrotreated 600-650 F material |
| P675 | Hydrotreated 650-700 F material |
| P725 | Hydrotreated 700-750 F material |
| P775 | Hydrotreated 750-800 F material |
| P825 | Hydrotreated 800-850 F material |
| P875 | Hydrotreated 850-900 F material |
| P925 | Hydrotreated 900-950 F material |
| P975 | Hydrotreated 950-1000 F material |
| P1000+ | Hydrotreated 1000+ F material |
| REFORMAT | Reformate product from the naphtha reformer |
| L-SULFUR | Liquid Sulfur |
| COAL* | Coal Feed |
| URCOAL* | Unreacted Coal |
| SLAG* | Slag from the Texaco Gasifier |

* Designates a non-conventional component of type NC.

AOXANAL must be in the stated order. For example, any ATTR-COMPS statements in the input files must be of the form:

ATTR-COMPS COAL PROXANAL ULTANAL SULFANAL AOXANAL

Both ASPEN/SP and the Fortran user block models assume that this order is used.

### 3.2.8 Management Summary Report

As discussed in subsection 3.2.7, several levels of reporting can be selected by the user by setting model specific integer parameters in the input files. In addition, the standard ASPEN/SP stream reports, history reports, etc. may be modified or expanded. A customized management summary report was designed for this project which summarizes the operations of the entire complex. The total model specific output report starts with the one-page management summary report, and is followed by a short summary for each plant of the key streams and components, costs, utilities and manpower requirements that may be of interest in evaluating various coal liquefaction scenarios. Figure 3.3 shows an example of one model specific plant summary report for Plant 1, the coal cleaning plant.
The complete management summary report and all individual plant summary reports with all the output options turned on is given in Appendix E. This report was generated by the ASPEN/SP process simulation model for the baseline design.

**Figure 3.3**

**Management Summary Report--Example**

PLANT 1 - SUMMARY REPORT
COAL CLEANING AND PREPARATION PLANT
COAL CLEANING BY JIGS FOR LIQUEFACTION

| | FEED COAL | CLEAN COAL | MIDDLING | REFUSE |
|---|---|---|---|---|
| DRY COAL, MLBS/HR | 2419.603 | 1935.683 | .000 | 483.921 |
| WATER, MLBS/HR | 210.505 | 166.004 | .000 | 44.501 |
| OTHERS, MLBS/HR | .000 | | | .000 |
| TOTAL, MLBS/HR | 2630.108 | 2101.687 | .000 | 528.422 |
| WASTE WATER, MLBS/HR | .000 | | | |
| ULTIMATE ANALYSIS, WT% | | | | |
| CARBON | 61.10 | 71.05 | .00 | 21.31 |
| HYDROGEN | 4.20 | 4.80 | .00 | 1.80 |
| NITROGEN | 1.20 | 1.43 | .00 | .28 |
| CHLORINE | .10 | .05 | .00 | .30 |
| SULFUR | 5.10 | 3.20 | .00 | 12.70 |
| OXYGEN | 6.60 | 8.00 | .00 | 1.00 |
| ASH | 21.70 | 11.47 | .00 | 62.61 |
| TOTAL | 100.00 | 100.00 | .00 | 100.00 |

| PLANT UTILITIES CONSUMPTIONS | |
|---|---|
| POWER, KW | 8289. |
| 900 PSIG/750 F STEAM, MLBS/HR | .0 |
| 900 PSIG SATD STEAM, MLBS/HR | .0 |
| 600 PSIG/720 F STEAM, MLBS/HR | .0 |
| 600 PSIG SATD STEAM, MLBS/HR | .0 |
| 150 PSIG SATD STEAM, MLBS/HR | .0 |
| 50 PSIG SATD STEAM, MLBS/HR | .0 |
| PLANT FUEL, MM BTUS/HR | .00 |
| COOLING WATER, MGAL/HR | .00 |
| PROCESS WATER, MGAL/HR | 47.10 |
| NITROGEN, MM SCF/HR OF N2 | .00 |
| TOTAL PLANT OPERATORS/DAY | 48.0 |

PLANT COSTING INFORMATION

| | |
|---|---|
| TOTAL NUMBER OF DUPLICATE TRAINS | 5 |
| MAXIMUM SIZE, MLBS/HR DRY CLEAN COAL | 390.000 |
| MINIMUM SIZE, MLBS/HR DRY CLEAN COAL | 200.000 |

| | TOTAL | FIRST | SUBSEQUENT |
|---|---|---|---|
| CAPACITY, MLBS/HR DRY CLEAN COAL | 1935.683 | 387.137 | 387.137 |
| PLANT ISBL FIELD COST, MM$ | 90.997 | 18.199 | 18.199 |

## 3.3 Description of the Plant Simulation Models

The following subsections present a brief process description, followed by a discussion of the Fortran user block model for each plant in the baseline coal liquefaction complex. A block diagram for each plant shows the input streams, and the output streams created by its simulation model. Calculation methods are discussed, and the plant-specific parameters to be set by the user in the input files are listed for each model. Those plants which are not in the baseline design, but are required for the optional cases are discussed in volume 2 under the appropriate option.

Each of the following models was developed to simulate the specific plant only to provide sufficient detail to determine the major output streams, utilities, cost and operators as a function of the input streams. Wash water streams are neglected in many cases, and detailed combustion calculations are not performed to generate some flue gas streams. Utility balances are developed based on the detailed design and calculated as linear functions of plant capacity.

### 3.3.1 Coal Cleaning/Preparation, Plants 1 and 1.4

Coal crushing, cleaning, grinding, and drying is simulated by distributing on a dry basis the carbon, hydrogen, nitrogen, chlorine, sulfur, oxygen and ash into clean coal, middling coal, and refuse product streams using the component distribution factors specified in the input file.

```
                    ----------------------
                    |                    |-----> Clean Coal Product
                    |   Plants 1 & 1.4   |
                    |                    |-----> Middling Coal
Feed Coal ---->     |   Coal Cleaning /  |
                    |    Preparation     |-----> Refuse
                    |       Plant        |
                    |                    |-----> Waste Water
                    ----------------------
```

Material not put into either of the two coal streams is automatically put into the refuse stream. After the flow rates of all components in all streams are calculated on a dry basis, the water contained in the feed coal is distributed among the three product streams according to the respective moisture contents specified in the input file.

Since this model does not consider a separate wash water input stream, some adjustments may be made to maintain a water balance. The model insures that no more water leaves the plant than entered with the feed coal. Although some of the wash water may be adsorbed during the cleaning process, this effect is ignored here because process water is not considered in the material balances of this simulation. If the water specifications for the three product streams cause more water to leave the plant than entered with the feed coal, the water content of the refuse stream is automatically adjusted to maintain the water balance. If the adjusted water content of the refuse stream

is negative, it is set to zero, a warning message is printed that the water specifications do not allow a water balance.

This model will work with any number of conventional components and non-conventional components. The coal to be cleaned must be the first non-conventional component listed in the input file.

One plant-specific INT parameter is required in the input file in addition to those discussed in subsection 3.2.6:

```
INT(5) = Coal cleaning option control switch.
         0 => Base case - Coal cleaning by jigs.
         1 => Alternate case 1 - Coal cleaning by heavy media
              separation.
         2 => Alternate case 2 - Coal cleaning by heavy media
              separation and spherical agglomeration.
         3 => Coal cleaning by jigs for coal gasification.
         4 => Coal grinding and drying plant only, Plant 1.4.
```

Seventeen plant-specific REAL parameters are required in the input file in addition to those discussed in subsection 3.2.6:

```
REAL(1)  = Fraction of carbon in the inlet coal leaving
           in the clean coal product stream.
REAL(2)  = Fraction of carbon in the inlet coal leaving
           in the middling coal stream.
REAL(3)  = Fraction of hydrogen in the inlet coal leaving
           in the clean coal product stream.
REAL(4)  = Fraction of hydrogen in the inlet coal leaving
           in the middling coal stream.
REAL(5)  = Fraction of nitrogen in the inlet coal leaving
           in the clean coal product stream.
REAL(6)  = Fraction of nitrogen in the inlet coal leaving
           in the middling coal stream.
REAL(7)  = Fraction of chlorine in the inlet coal leaving
           in the clean coal product stream.
REAL(8)  = Fraction of chlorine in the inlet coal leaving
           in the middling coal stream.
REAL(9)  = Fraction of sulfur in the inlet coal leaving
           in the clean coal product stream.
           OPTIONAL - See Note 1.
REAL(10) = Fraction of sulfur in the inlet coal leaving
           in the middling coal stream.
           OPTIONAL - See Note 1.
REAL(11) = Fraction of oxygen in the inlet coal leaving
           in the clean coal product stream.
REAL(12) = Fraction of oxygen in the inlet coal leaving
           in the middling coal stream.
REAL(13) = Fraction of ash in the inlet coal leaving
           in the clean coal product stream.
REAL(14) = Fraction of ash in the inlet coal leaving
           in the middling coal stream.
REAL(15) = Moisture content of the clean product coal on a
           dry basis, wt%.
REAL(16) = Moisture content of the middling coal on a dry
           basis, wt%.
```

REAL(17) = Moisture content of the refuse on a dry basis, wt%.

Note 1. If both the sulfur distribution factors, REAL(9) and REAL(10) are zero and a SULFANAL was supplied, the sulfur will be distributed among the products as follows.

a. The organic sulfur will be distributed in the same proportions as the carbon is distributed.

b. The pyritic and sulfate sulfur will be distributed in the same proportions as the ash is distributed.

The same Fortran user block model is used to simulate both Plant 1, the coal cleaning and preparation plant, and Plant 1.4, the coal grinding and drying plant. The fifth integer parameter, INT(5), is used to select which plant is modeled. A separate plant summary report can be generated for each plant. When Plant 1.4 is selected, all fractions of material in the inlet coal leaving in the clean coal product stream are set to 1.0. Thus, no middling coal or refuse streams are produced, and the REAL(15) parameter sets the moisture content of the dried coal going to the coal liquefaction reactors.

### 3.3.2 Coal Liquefaction, Plant 2

The simplified user Fortran block model for Plant 2, the coal liquefaction plant, was designed to reproduce the baseline design yields and product properties. It requires five inlet streams, hydrogen, coal, solvent, ROSE-SR Extract, and water, and generates six outlet streams, high pressure gas to Plant 6.1, low pressure gas to Plant 6.2, naphtha, gas oil, bottoms to the ROSE-SR unit, and sour water.

```
                 ----------------------
                 |                    |-----> H. P. Gas to Plant 6.1
Hydrogen ---->   |                    |
                 |      Plant 2       |-----> L. P. Gas to Plant 6.2
Wet Coal ---->   |                    |
                 |       Coal         |-----> Naphtha
Solvent ----->   |    Liquefaction    |
                 |       Plant        |-----> Gas-oil
ROSE Extract->   |                    |
                 |                    |-----> Bottoms to ROSE-SR Unit
Water ------->   |                    |
                 |                    |-----> Sour Water
                 ----------------------
```

The simplified reactor model contained in this Fortran user block model does not consider any solvent recycle external to Plant 2 other than the ROSE extract. Thus, in reality, the solvent stream can be neglected. However, the ASPEN block structure requires that five input streams be present in the above order. Therefore, a small water flow rate is supplied as a pseudo solvent stream.

The coal liquefaction reactor model contained in this Fortran user block reproduces the baseline design reactor yields using distribution factors for each of the key chemical elements in the inlet coal, carbon, hydrogen, oxygen, nitrogen, and sulfur. Chlorine is lumped in with carbon. The reactor model is elementally balanced subject to this restriction. In addition, it also will adjust the yields as a function of coal conversion on a

linear basis allowing the effects of coal conversion to be studied. Therefore, the model requires that the coal conversion be supplied as an input parameter.

The reactor products are distributed among the six product streams using component distribution factors contained within the model. These component distribution factors are described in the following section. They were developed based on the baseline design.

Since the coal liquefaction plant is the heart of the process, this model will estimate the sizes of the major pieces of equipment contained in the seven sections of the plant, based on the moisture free input coal feed rate. In addition, if requested, it will apportion the cost of the first train among these seven sections based on an independent complete processing train. These additional output reports are shown as part of the complete plant summary report for Plant 2 in Appendix E.

Two plant-specific INT parameters are required in the input file in addition to those discussed in subsection 3.2.6. The first one
controls the printing of this size and cost information to the plant summary file, and the second selects the appropriate coal liquefaction yields distribution for the option under consideration.

```
INT(5) = Switch to write the major equipment summary list and
         cost summary report by plant section for the baseline
         design to the separate block output summary report file
         called DCL02.REP on logical unit 62.
          0 => Do not write the major equipment summary list.
          1 => Write the major equipment summary list to the
               separate block output file only when
               INT(1) <= 2, INT(2) = 1, and INT(6) = 0.
          2 => Write the major equipment summary list and the
               cost summary report by plant section to the
               separate block output file only when
               INT(1) <= 2, INT(2) = 1, and INT(6) = 0.
INT(6) = Switch to select which coal liquefaction yields are
         calculated.
          0 => Baseline design two-reactor yields model.
          3=>  Option 3 - Yields for Thermal/Catalytic two-reactor
               model.
          4 => Option 4 - Two-reactor model with interstage vent
               gas separation.
          5 => Option 5 - Yields for two-reactor coker model.
          8 => Improved Baseline (Option 8) - High space velocity
               two-reactor model.
```

Space for twenty plant-specific REAL parameters is provided in the input file in addition to those discussed in subsection 3.2.6, however, only the first one is used:

REAL(1) = Percent coal conversion based on fresh MAF coal entering the coal liquefaction reactors.

### 3.3.3 The Gas Plant, Plant 3

The gas plant separates sweet gas from Plant 6 into fuel gas, propane, mixed butanes, and heavier hydrocarbons. Lean oil absorbs propane and heavier materials from sweet gas in the absorber/deethanizer. Ethane and lighter gases exit the top of this column to the plant fuel system while rich oil exits the bottom. Make-up lean oil, a naphtha stream from Plant 2, enters via a stripper column which removes moisture and sour gas, sent Plant 6 for further treatment.

Rich oil from the absorber/deethanizer goes to the debutanizer which produces a propane/butane overhead stream, and a lean oil bottom stream. A portion of this lean oil is sent to Plant 4 for hydrotreating and the rest recycled to the absorber/deethanizer column.

The depropanizer column separates the propane/butane stream into propane and butanes crude product streams. These are sent to LPG treating units to remove residual non-hydrocarbon impurities, such as mercaptans and trace amounts of hydrogen sulfide from the final gas products.

Thus, lean oil make-up from Plant 2 and sweet gas from Plant 6 enter the gas plant, and six product streams exit.

```
                        -----------------------
                        |                     |-----> Sour Gas to Plant 6
Lean Oil                |      Plant 3        |-----> Fuel Gas
Make-up ----->          |                     |
from Plant 2            |       The           |-----> Propane
                        |                     |
Sweet Gas --->          |     Gas Plant       |-----> Butanes
                        |                     |
                        |                     |-----> Lean Oil to Plant 4
                        |                     |
                        |                     |-----> Sour Water
                        -----------------------
```

The model assumes that the first inlet stream is lean oil make-up, and the second is sweet gas. The six outlet streams must be in the following order: Sour gas first, fuel gas second, propane third, butanes fourth, lean oil fifth, and sour water sixth.

Net products from the gas plant are calculated from the dry gas feed rate using component distribution factors representing each of the plant's four fractionation columns. Thus, the product rates and compositions are based only on the total dry gas rate entering the plant. This obviates time-consuming distillation computations, energy balances, and convergence of internal recycle stream properties, which significantly improves execution time of the model.

The Fortran block model simulates each of the four fractionation columns in the gas plant by component distribution factors. These specify the fraction of each component in the dry gas feed which leaves that column in each overhead product stream. Thus, the

amount of component i that is recovered in the overhead product stream is calculated from the amount entering in the feed stream by the following equation:

$$O_i = CDF_i * F_i \qquad \text{(Eq. 3.5)}$$

Where:

$O_i$ = Amount of component i entering the tower that is recovered in the overhead product stream
$F_i$ = Amount of component i entering the tower in the feed stream
$CDF_i$ = Component distribution factor for component i

Sour naphtha from Plant 2 (stream 1) enters the stripper column which produces sour gas (stream 3), sour water (stream 11), and make-up lean oil for the absorber/deethanizer (stream 4). The component distribution factors for this column are saved in the CDF1 vector.

Inlet gas (stream 2) and make-up lean oil from the previous column (stream 4) enter the absorber/deethanizer. This column produces a fuel gas stream (stream 5), and a rich oil stream (stream 6). The component distribution factors for this column are saved in the CDF2 vector.

The debutanizer column separates rich oil (stream 6) into propane/butanes (stream 7), and lean oil. Some lean oil is recycled to the absorber/deethanizer, and the rest is sent to product naphtha (stream 8). The component distribution factors for this column are saved in the CDF3 vector.

The depropanizer column separates the propane/butanes (stream 7) into propane (stream 9) and butanes (stream 10) crude products. The component distribution factors for this column are saved in the CDF4 vector.

The plant summary report can be printed either to a separate output report file called DCL03.REP, or to the normal ASPEN/SP output report, as described above in section 3.2.6.

Since the entire gas plant is being modeled by a single user Fortran block model, no useful additional information will be gained by an enthalpy balance calculation around the entire plant. Instead, the model has been programmed to calculate the eleven plant utilities requirements as described above in subsection 3.2.3.

The capital cost for the gas plant is calculated as described above in subsection 3.2.4. The key flow rate for the capital cost model is the dry gas rate entering the gas plant.

The Fortran block model for the gas plant contains the following model-specific error and/or warning messages. These may be printed in the history file, and/or in the user model report, depending on the integer parameters specified in the input file for a particular run.

1. The model has an incorrect number of input streams. The gas plant requires exactly two input streams. When this situation occurs, an error message is written to the history file and execution is terminated.

2. The model has an incorrect number of outlet streams. The gas plant requires exactly six outlet streams. When this situation occurs, an error message is written to the history file and execution is terminated.

3. One of the six required components is missing from the ASPEN/SP component list. This user Fortran block requires that all six of these components must be present in the component list. Therefore, when one of these components is missing, an error message is written to the History file, and execution is terminated.

4. Since this is a gas phase process, no solids should enter the plant. However, if any solids or unknown components enter this plant, they do not leave it and are lost within the process. The gas plant will not be in weight balance. Warning messages will be written both to the history file and to the plant summary report if any solids or unknown components enter the gas plant. However, this error will not terminate execution.

The gas plant model requires that the ASPEN/SP input file contain all of the components shown in Table 3.2, except for COAL, URCOAL, and SLAG. The components may be present in any order, and any component may have a zero flow rate. The model will print a warning message and terminate execution if any required component(s) is not specified in the input file, or if flow(s) is specified for excluded components.

Because split fractions for the separations simulated by the model are contained in the model itself, they cannot be adjusted by an input file. Therefore, no plant-specific REAL input parameters are required by the gas plant model, subroutine USR03.FOR.

### 3.3.4 Naphtha Hydrotreater, Plant 4

The naphtha hydrotreater is a co-current downflow, trickle-bed, catalytic unit which upgrades the combined naphtha streams to meet product specifications. In the hydrotreater, chemically-bound nitrogen, sulfur, and oxygen heteroatom contaminants in the naphtha react with hydrogen to form ammonia, hydrogen sulfide, and water. These acid gases are removed by water scrubbing in a separator immediately downstream of the hydrotreater.

Thus, combined naphtha streams from various plants in the complex, along with hydrogen-rich gas and water, enter the naphtha hydrotreater. Gases, hydrotreated naphtha, and sour water containing the acid gases exit the naphtha hydrotreater.

```
                    ----------------------
Hydrogen ---->|        Plant 4        |-----> Gases
              |                       |
Naphtha  ---->|        Naphtha        |-----> Hydrotreated Naphtha
              |      Hydrotreater     |
Water ------->|                       |-----> Sour Water
                    ----------------------
```

While the Fortran user block model for the naphtha hydrotreater will work with a greater number of conventional components, 50 specific conventional components are required, and up to three non-conventional coal type components may be specified in the component list. However, any solid components in the input streams will be ignored, and error messages will be written in the history file and in other reports as may be requested by setting the integer parameters in the input file.

In this model the three product streams are generated by distribution factors which allocate components to the naphtha and the sour water stream product streams. All remaining material is placed in the product gas stream. The component distribution factors are set by the following plant-specific REAL parameters in the input file:

```
REAL(1) = Percent desulfurization of the C5+ feed; i. e.,
          Percent of sulfur removed from the entering C5+ feed.
REAL(2) = Percent denitrogenation of the C5+ feed; i. e.,
          Percent of nitrogen removed from the entering C5+ feed.
REAL(3) = Percent deoxygenation of the C5+ feed; i. e.,
          Percent of oxygen removed from the entering C5+ feed.
REAL(4) = Specified chemical hydrogen consumption, SCF/bbl of C5+ feed.
```

If the hydrogen consumption exceeds the makeup hydrogen, then the leaving hydrogen flow rate will be negative. If this is the case, the outlet hydrogen flow will be set to zero and a warning message will be written in the history file and certain other requested reports.

In the model, the reactor purge gas stream from Plant 2 and the naphtha stabilizer overhead gas stream are combined into one stream because they go to the same place in the actual design. Streams are fractionated using component distribution factors as described previously for the gas plant.

### 3.3.5 Gas Oil Hydrotreater, Plant 5

The gas oil hydrotreater is a co-current downflow, trickle-bed, catalytic unit which upgrades the combined gas oil producing several product streams.

Hydrogenation of high molecular weight aromatic hydrocarbons contained in the gas oil yields hydrocarbon gases, lower molecular weight cyclic and linear hydrocarbons boiling in the naphtha range, and upgraded liquid products boiling in the gas oil range. Some of the chemically-bound nitrogen, sulfur, and oxygen heteroatom contaminants in the gas oil react with hydrogen to form ammonia, hydrogen sulfide, and water. These acid gases are removed by water scrubbing in a separator immediately downstream of the hydrotreater. A fractionator separates liquid products into various boiling fractions.

Thus, combined gas oil streams from various plants in the complex, along with hydrogen-rich gas and water, enter the gas oil hydrotreater. High pressure purge gas, hydrocarbon gases, naphtha product, 350 - 450 F product, 450 - 650 F product, 650 - 858 F product, and sour water containing the acid gases exit the gas oil hydrotreater.

```
                    -----------------------
                    |                     |-----> H. P. Purge Gas
                    |                     |
                    |                     |-----> Other Gases
Hydrogen ---->      |      Plant 5        |-----> Naphtha Product
                    |                     |
                    |     Gas-oil         |-----> 350 - 450 F Product
Gas-oil ----->      |   Hydrotreater      |
                    |                     |-----> 450 - 650 F Product
Water ------->      |                     |
                    |                     |----> 650 - 850 F product
                    |                     |
                    |                     |-----> Sour Water
                    -----------------------
```

While the Fortran user block model for the gas oil hydrotreater will work with a greater number of conventional components, 50 specific conventional components are required, and up to three non-conventional coal type components may be specified in the component list. However, any solid components in the input streams will be ignored, and error messages will be written in the history file and other reports as may be requested by setting integer parameters in the input file.

In this model seven product streams are generated by distribution factors which allocate components to the last six product streams. All remaining material is placed in the high pressure purge gas stream. The component distribution factors are set by the following plant-specific REAL parameters in the input file:

```
REAL(1) = Percent desulfurization of the C6+ feed; i. e.,
          Percent of sulfur removed from the entering C6+
          feed.
REAL(2) = Percent denitrogenation of the C6+ feed; i. e.,
          Percent of nitrogen removed from the entering C6+
          feed.
REAL(3) = Percent deoxygenation of the C6+ feed; i. e.,
          Percent of oxygen removed from the entering C6+
          feed.
REAL(4) = Specified chemical hydrogen consumption,
          SCF/bbl of C6+ feed.
```

### 3.3.6 Hydrogen Purification, Plant 6

As described in detail in the Task II Topical Report, the hydrogen purification plant consists of a membrane permeation section for recovery of hydrogen from high pressure purge gas streams, and a pressure swing absorption section for recovery of hydrogen from low pressure purge gas streams. These are designated Plants 6.1 and 6.2 for modelling purposes, and are modeled sequentially with the non-permeate gas from Plant 6.1 going to Plant 6.2 for additional hydrogen recovery.

```
                    ---------------------
                    |                   |
                    |     Plant 6.1     |
High Pressure       |                   |-----> H2-Rich Gas
 Gas Feed---->      |    Hydrogen       |
                    |   Purification    |-----> Sour Gas
                    |                   |
                    |   (by Membrane    |
                    |    Permeation)    |-----> Reject Gas
                    |                   |       to Plant 6.2
                    ---------------------

                    ---------------------
                    |                   |
Low Pressure        |     Plant 6.2     |-----> H2-Rich Gas
 Gas Feed---->      |                   |
                    |    Hydrogen       |-----> Sour Gas
                    |   Purification    |
                    |                   |
Reject Gas---->     |    by Pressure    |-----> Reject Gas
from Plant 6.1      |       Swing       |
                    |    Absorption     |-----> Naphtha
                    |                   |
                    ---------------------
```

For simplicity, the model simulates the total hydrogen recovery, but not the exact composition of the two hydrogen product streams. Here all of the recovered hydrogen is mixed together to produce a common hydrogen stream, which is considered to be at high pressure and goes to plant 2. Whereas, in the actual design, two hydrogen-rich streams of different compositions are produced in order to minimize compression and capital costs. This technique is used because the purpose of the hydrogen recovery plant model is only to predict the hydrogen recovery so that the amount needed for makeup can be calculated and produced.

Each plant requires the following two input parameters:

```
REAL(1)   = Percent hydrogen recovery to the hydrogen-rich
            product gas stream from the inlet gas stream.
REAL(2)   = Concentration of hydrogen in the hydrogen-rich
            product gas stream, mole % or vol%.
```

### 3.3.7 ROSE-SR Solids/Liquid Extraction, Plant 8

The critical solvent deashing unit uses proprietary technology owned by Kerr-McGee Corporation to concentrate and separate residuum from the ash in the vacuum tower bottoms from Plant 2. The model has a single inlet stream, the Plant 2 vacuum tower bottoms, and two outlet streams, deashed residuum and ash concentrate.

```
                    ---------------------
                    |                   |
                    |    Plant 8.1      |
                    |                   |-----> Deashed Residuum
Feed---->           |   ROSE-SR Unit    |
                    |                   |-----> Ash Concentrate
                    |                   |
                    ---------------------
```

While this user block model will work with any number of conventional components, it requires that three non-conventional components be specified in the following order, COAL, URCOAL and SLAG. Any fresh coal, unreacted coal, slag, or unknown components present in the input stream leaves the ROSE-SR unit unchanged in the ash concentrate stream.

The Fortran user block model calculates the component flow rates in the ash concentrate stream as follows. The amount of each conventional component leaving in the ash concentrate stream is calculated as a percentage of that material entering the plant. All of the remaining material leaves in the deashed residuum stream. All non-conventional components entering the plant, i.e., the solid components COAL, URCOAL, and SLAG, and any unknown components, called OTHERS, leave in the ash concentrate stream.

This Fortran user block model requires only one plant specific input parameter in addition to those which have been previously discussed.

REAL(1) = Hydrocarbon rejection factor.

The hydrocarbon rejection factor is a multiplier on the amount of conventional (fluid) components that is rejected in the ash concentrate stream. For the baseline design, this factor is 1.0. It was required for some of the optional cases because the relative amount of hydrocarbon in the ash concentrate stream is different than that of the baseline design.

The parameters for this plant which specify the relative component recoveries are imbedded in the Fortran code, and are not available to the user for adjustment via REAL parameters. The section of the Fortran code shown below lists the data statement in subroutine USR81A (which is called by subroutine USR81) that sets the percentage of each component that leaves the plant in the ash concentrate stream.

```
C     Initialize the percent of the conventional components entering
C     in the feed that leaves in the ash concentrate stream.
C     Weight % of     H2      N2      O2      H2S      CO
      DATA YC  /      0.0,    0.0,    0.0,    0.0,     0.0,
C        CO2         NH3       H2O       HCL        COS
     1  0.0,        0.0,      0.0,      0.0,       0.0,
C       CH4         C2H6      C3H8      IC4H10     N C4H10
     2  0.0,        0.0,      0.0,      0.0,       0.0,
C       IC5H12      N C5H12   T125      T175       T225
     3  0.0,        0.0,      0.0,      0.0,       0.0,
C       T275        T325      T375      T425       T475
     4  0.0,        0.0,      0.0,      0.0,       0.0,
C       T525        T575      T625      T675       T725
     5  0.0,        0.0,      0.0,      0.0,       0.0,
C       T775        T825      T875      T925       T975
     6  0.0,        0.0,      82.5161,  82.5161,   82.5161,
C       T1000+      I1000+    Future    Future     Future
     7  16.47702,   0.0,      0.0,      0.0,       0.0 /
```

### 3.3.8 H2 Production by Coal Gasification, Plant 9

The gasifier is a standard Texaco entrained-flow, oxygen-blown unit. A preheated water slurry of finely ground coal and ash concentrate, and oxygen is injected through a specially designed burner into the gasifier, essentially an empty, refractory-lined reaction vessel. Therein the reactions proceed through heat-up, pyrolysis, combustion, and gasification of the carbonaceous materials, yielding a synthesis gas, mostly H2 and CO, with small amounts of CO2, H2S, and CH4, and molten slag. Direct water quench cools the gas and the steam generated here supplies the requirement for the shift reactor immediately downstream. In the shift reaction, CO reacts with water to produce more H2, and CO2. The shifted gas then passes into a Rectisol unit which removes acid gases from the hydrogen-rich gas stream.

```
                    -----------------------
Coal ---->|                       |-----> Hydrogen
                Plant 9
Water ---->|                      |-----> H2S
                                  |-----> Vent Gas
Oxygen ---->| H2 Production by
            | Coal Gasification
                Plant             |-----> Sour Water
Steam ---->|                      |-----> Dry Slag
                    -----------------------
```

The input file for the coal gasification model must specify the four inlet streams, coal, water, oxygen, and steam. The coal stream usually contains a mixture of coal and ash concentrate from Plant 8. The input streams must be supplied in the specified order. The first inlet stream must contain the coal and ash concentrate. The second stream is the water in the coal/ash concentrate slurry entering the gasifier. The third stream is the crude gas quench water and steam that enters the plant downstream of the gasifier vessel, and goes to the shift reactor section. For simplicity, the nitrogen used as stripping gas is not shown as an input, but is considered as a utility. Five product streams are created by the model, hydrogen, H2S-rich gas, vent gas, sour water, and slag.

This model will work with any number of conventional components, but requires that three non-conventional coal type components, COAL, URCOAL and SLAG be defined in the order shown. All streams containing non-conventional components must be of the ASPEN/SP stream class MIXNC or MIXNCPSD. The order of the items in the ATTR-COMPS statement must be PROXANAL, ULTANAL, SULFANAL AND AOXANAL because ASPEN/SP stores the items in this order and the model also assumes that this order is used. Therefore, the three ATTR-COMPS statements in the input file are:

```
ATTR-COMPS COAL PROXANAL ULTANAL SULFANAL AOXANAL
ATTR-COMPS URCOAL PROXANAL ULTANAL SULFANAL AOXANAL
ATTR-COMPS SLAG PROXANAL ULTANAL SULFANAL AOXANAL
```

Any COAL AND URCOAL present in the first input stream is gasified and the products are shifted. Any SLAG present in the input stream is ignored. A warning message will be written to the history file if the first input stream contains any SLAG.

This model also simulates the Rectisol unit downstream of the shift reactor section, creating the hydrogen-rich gas, H2S-rich gas, vent gas, and sour water streams. All COS, H2O AND HCl are put into the sour water stream. User supplied component distribution factors in the input file distribute the H2, CO, CO2, CH4, N2 and H2S into the hydrogen and hydrogen sulfide-rich gas streams. All remain material leaves in the vent gas stream.

Twenty plant-specific REAL parameters are required in the input file in addition to those discussed in subsection 3.2.6:

```
REAL(1) =   Molar CO/CO2 ratio in the gasifier product gas.
REAL(2) =   Fraction of carbon in the coal entering the
            gasifier that goes to carbonyl sulfide (COS).
REAL(3) =   Fraction of carbon in the coal entering the
            gasifier that goes to methane (CH4).
REAL(4) =   Carbon content of the slag produced by the
            gasifier, wt %.
REAL(5) =   Future use.
REAL(6) =   Fraction of carbon monoxide (CO) entering the
            shift reactors that is shifted; i.e., converted
            to carbon dioxide (CO2) by the reaction
            CO + H2O -----> CO2 + H2
REAL(7) =   Fraction of carbonyl sulfide (COS) entering the
            shift reactor section that is hydrolyzed; i.e.,
            converted to carbon dioxide (CO2) and hydrogen
            sulfide (H2S) by the reaction
            COS + H2O -----> CO2 + H2S
REAL(8) =   Future use.
```

REAL(9)-
REAL(20) = Rectisol section component distribution factors, where

REAL(9) = Fraction of inlet $H_2$ going to the hydrogen-rich gas stream.

REAL(10) = Fraction of inlet $H_2$ going to the hydrogen sulfide rich gas stream.

REAL(11) = Fraction of inlet CO going to the hydrogen-rich gas stream.

REAL(12) = Fraction of inlet CO going to the hydrogen sulfide rich gas stream.

REAL(13) = Fraction of inlet $CO_2$ going to the hydrogen-rich gas stream.

REAL(14) = Fraction of inlet $CO_2$ going to the hydrogen sulfide rich gas stream.

REAL(15) = Fraction of inlet $CH_4$ going to the hydrogen-rich gas stream.

REAL(16) = Fraction of inlet $CH_4$ going to the hydrogen sulfide rich gas stream.

REAL(17) = Fraction of inlet $N_2$ going to the hydrogen-rich gas stream.

REAL(18) = Fraction of inlet $N_2$ going to the hydrogen sulfide rich gas stream.

REAL(19) = Fraction of inlet $H_2S$ going to the hydrogen-rich gas stream.

REAL(20) = Fraction of inlet $H_2S$ going to the hydrogen sulfide rich gas stream.

NOTE: MM SCF/hr of hydrogen produced means MM SCF/hr of hydrogen in the hydrogen-rich product gas stream and NOT the total flow rate of the hydrogen-rich product gas stream.

### 3.3.9 Air Separation, Plant 10

The air separation plant is a standard design which produces oxygen by fractional distillation of liquefied air.

```
                    ----------------------
                    |                    |
                    |     Plant 10       |------> Oxygen
                    |                    |
          Air ---->|   Air Separation   |
                    |       Plant        |------> Nitrogen
                    |                    |
                    ----------------------
```

The single inlet air stream to this plant must contain the two components, $O_2$ and $N_2$. Two outlet streams created by the model are oxygen and nitrogen with purities specified in the input file.

Two plant-specific REAL parameters are required in the input file in addition to those discussed in subsection 3.2.6:

REAL(1) = Purity of the product oxygen stream, mole %.
REAL(2) = Purity of the product nitrogen stream, mole %.

### 3.3.10 Sulfur Recovery, Plant 11

The sulfur plant design, described in detail in the Task II Topical Report, is based on the classic "Claus" reaction. About one-third of the hydrogen sulfide in the feed is oxidized to form sulfur dioxide and water. The sulfur dioxide then reacts with the remaining hydrogen sulfide to form elemental sulfur and water vapor. A SCOT Unit converts the relatively small amounts of sulfur dioxide and elemental sulfur in the Claus tailgas to hydrogen sulfide. Amine scrubbing separates this for recycle to the Claus unit, and the remaining gas is incinerated.

The net chemical reaction for the sulfur recovery plant is:

$$2\ H_2S + O_2 \longrightarrow 2\ S + 2\ H_2O$$

However, this simplistic sulfur plant model does not consider the oxidation step and the air requirement, as that would add more complexity to the overall model than is necessary. The minimum air requirement for oxidation is estimated based on the amount of sulfur entering the plant.

```
                    ---------------------
                    |                   |
                    |     Plant 11      |-----> Flue Gas
Feed Gas ---->      |                   |
                    |      Sulfur       |-----> Liquid Sulfur
                    |  Recovery Plant   |
                    |                   |
                    ---------------------
```

Feed Gas is the single inlet stream. Flue Gas and Liquid Sulfur are the two outlet streams. This model will work with any number of conventional and non-conventional components, and will automatically find the relative component numbers of H2, H2S, COS, L-SULFUR (liquid sulfur), and CO. These component names must be in the input file component list.

All components in the feed stream exit in the flue gas stream, except for sulfur recovered from H2S and COS in the feed. Any liquid sulfur in the feed is assumed to be recovered and exits in the liquid product stream along with sulfur recovered from the H2S and COS components. Because the oxidation reactions are ignored, for mass balance purposes it is assumed that the hydrogen in the H2S component exits as H2, and the carbon and oxygen in the COS component exits as CO in the flue gas stream.

One plant-specific REAL parameter is required in the input file in addition to those discussed in subsection 3.2.6:

REAL(1) = Fractional sulfur recovery; fraction of sulfur in the entering H2S and COS that is recovered in the product liquid sulfur stream.

### 3.3.11 Steam and Power Generation, Plant 31

The utilities plant (Plant 31) supplies steam and electric power to the other plants in the complex. This model assumes that all available plant fuel, low BTU gas from various sources, is burned in combustion turbines to make electric power. The hot, air-rich exhaust from the turbines supports combustion of the fuel(s) specified in the input file in boilers which make steam and electric power to satisfy the demands of the complex. Excess electric power that may be generated is assumed to be sold.

```
                  ----------------------
                  |       Plant 31     |
Fuel Gas ---->    |                    |----> Flue Gas
                  |       Utilities    |
                  |        Plant       |
                  ----------------------
```

The single inlet stream for this model is fuel gas. An outlet stream must be specified, because every ASPEN/SP model must have at least one outlet stream. Since this model does not simulate the burning of fuel gas, but calculates plant performance based on other input data, the output stream is set equal to the input stream to maintain a material balance. In reality the flue gas output stream is much larger and consists entirely of combustion products.

Eleven integer parameters are required by this model in addition to the four discussed in subsection 3.2.6:

INT(5) = Future use.

INT(6) - INT(10) Switches to select which fuels are burned in the steam boiler to produce steam and/or electric power to satisfy the steam demand. The fuel specified in INT(6) is used until it is all consumed, the steam demand is satisfied, or the capacity to use this fuel is reached. Then the INT(7) fuel is used, etc. The fuel codes are:

1 = Coal
2 = ROSE-SR unit bottoms
3 = Coke
4 = Natural gas
5 = Plant fuel

INT(11) - INT(16) Switches to select which fuels are burned in the boiler to satisfy the electric power demand. The fuel specified in INT(11) is used until it is all consumed, the power demand is satisfied, or the capacity to use this fuel is reached. Then the INT(12) fuel is used, etc. The fuel codes are:

1 = Coal
2 = ROSE-SR unit bottoms
3 = Coke
4 = Natural gas
5 = Plant fuel
6 = Purchased electric power

Only twenty plant-specific REAL parameters are required in the input file. Since Plant 31 is considered an OSBL plant, no utilities or cost information is required.

```
REAL(1) =     Reference electric power generation rate of a single train in
              MW.
REAL(2) =     Maximum size of a single train as defined by the electric
              power generation rate in MW.
REAL(3) =     Minimum size of a single train as defined by the electric
              power generation rate in MW.
REAL(4) =     Constant A in the plant costing equation.
REAL(5) =     Constant B in the plant costing equation.
REAL(6) =     Constant E in the plant costing equation.
REAL(7) =     Constant F in the plant costing equation.
REAL(8) =     Number of spare trains.
REAL(9) -
 REAL(20) =   Future use
```

### 3.3.12 Ammonia Recovery, Plant 38

This is a very simple model of the PHOSAM-W ammonia recovery plant. It is designed only to satisfy the mass balance requirements and predict the correct amount of ammonia production from the entering sour water.

```
                    ---------------------
                    |                   |
                    |      Plant 38     |-----> Ammonia Product
Total Feed---->     |                   |
                    |      Ammonia      |-----> Sour Water
                    |   Recovery Plant  |         and Acid Gas
                    |                   |
                    ---------------------
```

The above Fortran user block model produces only two product streams, the recovered ammonia product, and a stream containing all other material present in the feed. The other material leaving the Fortran user block model is split into an acid gas vapor stream that goes to the sulfur recovery plant and a liquid stream that goes to Plant 39 for phenol recovery by an ASPEN SEP block. Thus, the complete ammonia recovery plant model consists of the above Fortran user block model followed by the SEP block.

Two plant specific REAL input parameters in addition to those discussed in subsection 3.2.6 are required to define how this plant performs. The first specifies the fraction of the entering ammonia that is recovered, and the second sets the purity of the ammonia recovered. Water is the only impurity which may be present in the ammonia product.

REAL(1) = Ammonia recovery, percent.
REAL(2) = Purity of ammonia product, wt %.

### 3.3.13 Phenol Recovery, Plant 39

This is a very simple model of the Glitsch Phenol Recovery Plant. It is designed only to satisfy the mass balance requirements and predict the correct amount of phenol production from the entering sour water. It produces only two product streams; the recovered phenol product stream and a waste water stream containing all other material present in the feed stream. Part of this waste water stream is recycled to plant 2 and part goes to the waste water treatment plant.

```
                    ----------------------
                    |                    |
                    |      Plant 39      |-----> Phenol Product
Total Feed---->     |                    |
                    |      Phenol        |-----> Total Waste Water
                    |   Recovery Plant   |         Stream
                    |                    |
                    ----------------------
```

Two plant specific REAL input parameters in addition to those discussed in subsection 3.2.6 are required to define how this plant performs. The first specifies the fraction of the entering phenol that is recovered, and the second sets the purity of the phenol recovered. Water is the only impurity which may be present in the phenol product.

REAL(1) = Phenol recovery, percent.
REAL(2) = Purity of phenol product, wt %.

## 3.4 Description of the Overall Process Simulation Model

A stream flow diagram of the ASPEN/SP process simulation model for the baseline design case is shown in Figure 3.2. All major streams are shown. All processing plants and ASPEN/SP unit operation blocks are shown as rectangles. In general, the names of all plants or significant portions thereof begin with a P, and the ASPEN/SP unit operation blocks begin with other letters. The letter M is used to designate a stream mixer, and S is used to designate a stream or component splitter. However, one mixer and one splitter are considered to be part of the ammonia recovery plant model and are designated as blocks P38A and P38B.

The stream flow generally follows that of the baseline design as shown in Figure 3.1. The following paragraphs will discuss only the differences between the model and the baseline design.

Three coal cleaning options are available for various levels of coal cleaning for the coal going both to the liquefaction reactors and gasifier. The use of the two alternate coal cleaning options will be discussed in Sections 5 and 6. The clean coal going to the coal liquefaction reactors is then dried in Plant 1.4; whereas that going to the gasifier is not dried.

The hydrogen purification plant, Plant 6, is modeled as two plants rather than a single plant. Plant 6.1 is a high pressure hydrogen purification by membrane permeation plant, and Plant 6.2 is a lower pressure hydrogen purification by pressure swing absorption plant. The reject gas from Plant 6.1 is part of the feed to Plant 6.1. In contrast to the actual baseline process design, the recovered hydrogen from both plants is mixed and goes to the coal liquefaction plant. The actual hydrogen distribution system sends some of the hydrogen recovered by the lower pressure process to the naphtha hydrotreater to save compression and capital costs. This modeling technique was selected to simplify the flowsheet and still predict the amount of hydrogen recovered so that the Plant 9 could be sized to supply the appropriate amount of makeup hydrogen.

The naphtha product leaving the naphtha hydrotreater may be optionally reformed to produce a high octane gasoline blending component, light hydrocarbons and hydrogen. This processing option is discussed Section 11.

Plant 10, the air separation plant, is shown on the side and not connected to Plant 9. In reality, there is a connection between streams 9-O2IN and 10S01, but by keeping them separate, it speeds up and simplifies the simulation.

Plant 9-1, the hydrogen production by steam reforming of natural gas plant, is shown on the side and will be discussed in Section 10.

The Fortran source code for all the ASPEN/SP user Fortran block models is given in Appendix B, and the Fortran source code for all supplemental routines is given in Appendix C. The Fortran routines in these appendices are well commented.

The ASPEN/SP input file for the baseline design simulation of the nth plant (file DCLN.INP) is given in Appendix A. This listing also is well commented. All lines beginning with a semicolon (;) are comment lines and are present only to make the file more intelligible to the reader.

There are eleven (in line) Fortran blocks in the simulation that are used for feed forward control and to set up the flowrates and compositions of various streams. These Fortran blocks are:

1. **9COAL** - 9COAL sets the water flow rate in the conventional portion of the clean coal stream going to Plant 9, the coal gasification plant, so that it has the same composition as that leaving Plant 1, the coal cleaning and preparation plant.

2. **COALFLOW** - COALFLOW resets the split fraction in the ASPEN/SP flow splitter unit operations block to match the coal flow rates going to Plants 1.4 and 9.

3. **MIXFLO** - MIXFLO assures that the entering ROM coal always will have the user specified water content.

4. **SA6SET** - SA6SET dynamically sets the fraction of the URCOAL in separation block SA6 equal to the REAL(1) solids production parameter in block P314, the fluidized bed combustor. This parameter only is used for Option 6.

5. **SETUP2** - SETUP2 sets the combined steam and water flow rates to Plant 2, the coal liquefaction plant, as a function of the coal feed rate.

6. **SETUP9** - SETUP9 sets the steam, water and oxygen stream flow rates to Plant 9, the coal gasification plant, based on the hydrocarbon and non-conventional component flow rates to Plant 9.

7. **SETUP31** - SETUP31 calculates the common and OSBL utility consumptions as a function of the dry coal feed rate to Plant 2.

8. **SETUP45** - SETUP45 sets the makeup hydrogen and water flow rates to Plants 4 and 5, the naphtha and gas oil hydrotreaters, as a function of the feed rates to each plant.

9. **SETUP91** - SETUP91 is a Fortran block that sets the steam flow to Plant 9.1 as a function of the natural gas feed rate.

10. **OPTION6** - OPTION6 is the Fortran block that is used to select between the two hydrogen production options. When N9 is set to 0, the baseline design hydrogen production option by coal gasification is used; and when N9 is set to 1, the alternate hydrogen production option, steam reforming of natural gas,

is used. It also sets the fraction of water leaving ammonia plant that goes Plant 9 rather than going to Plant 38, the phenol recovery plant.

11. **SUMMARY** - SUMMARY is the Fortran block which completes the capital cost calculations. It contains parameters LOSBL and LPLANT to select the costing options. The calculations are done in subroutines USRSR1, USRSR2 and USRSR3. The routines write the overall management summary report of the entire simulation and the DCL1.PRN file for transferring the simulation results to the LOTUS 123 spreadsheet economics model.

There are six design specifications (DES-SPECs) in the baseline design simulation. Five of these, 2H2FLO, H2FLO, HD-HYD, O2FLO and RFMRFLO are concerned with balancing stream flow rates so that the simulation will be in mass balance and are of no concern to the casual user. They are used in place of recycle stream convergence loops to speed up the simulation.

The sixth design specification, DES-SPEC COALFLO, is used to set the desired dry clean coal flow rate to the coal liquefaction plant, Plant 2. The desired dry clean coal flow rate to Plant 2 is set in short tons per stream day in the Fortran variable TPD. When another coal feed rate is to be used, the right hand side of the following Fortran statement in DES_SPEC COALFLO is changed to the appropriate flow rate in short tons per stream day.

```
F     TPD = 17102.0D0
```

As listed above, the Plant 2 clean coal feed rate is 17,102 tons/stream day. The final two characters, D0, indicate that the item is being supplied in double precision. This is standard Fortran nomenclature.

There are three recycle loops which are iteratively converged by the ASPEN/SP process simulation model; CBLK1, CBLK2 and CBLK3. CBLK1 is the conversion loop which converges the hydrogen recovery recycle gas calculations. Nested within CBLK1 is CBLK2 which converges the liquid recycle loop between Plants 2 and 8. CBLK3 is the third recycle loop which is iteratively converged. This loop is around the ammonia and phenol plants and assures that the correct production of these two byproducts are obtained.

The calculation sequence is manually supplied in two SEQUENCE sentences, CLEAN and BASE. CLEAN is a subsequence which handles the coal cleaning and drying facilities. BASE is the sequence for the entire baseline design simulation. In BASE, the CLEAN subsequence is repeated after the model has determined what clean coal rates are required from Plants 1 and 1.4. Recalculating the CLEAN subsequence at this time, resizes these plants to the desired sizes.

## 3.5 Simulation of the Baseline Design

The above described ASPEN/SP process simulation model was used to simulate the baseline design for the nth plant. Table 3.3 compares the ASPEN/SP process model simulation results with those of the detailed baseline design.

The top part of the table compares the inlet and outlet stream flow rates. For the baseline design conditions, excellent agreement is obtained between the inlet and outlet stream flow rates. The largest absolute product stream differences are 13 barrels per stream day for the naphtha and heavy distillate product stream rates. The liquid propane production rate has the largest relative difference of 0.09%, which is 4 barrels per stream day.

The middle section of the table shows that the model accurately predicts the total number of plant operators, and overpredicts the total installed capital cost of the plant by 0.4 MM$ or 0.01%. This difference is well within the estimated accuracy of the costing techniques used to develop the plant costs from the detailed baseline design

The bottom section of the table shows how accurately the model predicts the costs of the individual process plants (including their apportioned share of the OSBL facilities) compared to the detailed baseline design.

Appendix E contains the complete Management Summary Report and all the individual plant summary reports with all the output options turned on for the simulation of the baseline design. These reports contain additional details of the stream flows for comparison with the detailed baseline design values shown in Figure 3.1.

## Table 3.3

### Comparison of the ASPEN/SP Process Simulation Model with the Detailed Process Design

| | Model | Design | Delta (M-D) | Percent Delta |
|---|---|---|---|---|
| ROM COAL FEED RATE, MTSD (dry) | 29.035 | 29.035 | 0.000 | 0.00 |
| COAL CLEANING REFUSE RATE, MTSD | 5.807 | 5.806 | 0.001 | 0.02 |
| ASH PRODUCTION RATE, MTSD | 2.812 | 2.812 | 0.000 | 0.00 |
| NATURAL GAS RATE, MMMBTU/SD | 84.264 | 84.240 | 0.024 | 0.03 |
| ELECTRICITY PURCHASE, MEGA-WH/SD | 0 | 0 | 0.000 | 0.00 |
| RAW WATER MAKE-UP, MMGSD | 17.340 | 17.340 | 0.000 | 0.00 |
| NAPHTHA PRODUCTION, MBSD | 19.208 | 19.195 | 0.013 | 0.07 |
| LT.DIST.PRODUCTION, MBSD | 7.809 | 7.803 | 0.006 | 0.08 |
| HVY.DIST. PRODUCTION, MBSD | 21.648 | 21.635 | 0.013 | 0.06 |
| GAS OIL PRODUCTION, MBSD | 13.319 | 13.310 | 0.009 | 0.07 |
| LIQUID PROPANE PRODUCTION, MBSD | 4.411 | 4.407 | 0.004 | 0.09 |
| MIXED BUTANES PRODUCTION, MBSD | 3.544 | 3.541 | 0.003 | 0.08 |
| AMMONIA PRODUCTION, MTSD | 0.244 | 0.244 | 0.000 | 0.00 |
| PHENOL PRODUCTION, MTSD | 0.032 | 0.032 | 0.000 | 0.00 |
| SULFUR PRODUCTION, MTSD | 0.741 | 0.741 | 0.000 | 0.00 |
| NUMBER OF OPERATORS/BOARDMEN | 415 | 415 | 0.000 | 0.00 |
| TOT.INSTALLED CAPITAL, $MM (E-YR) | 3491.598 | 3491.200 | 0.398 | 0.01 |
| Individual Plant Costs in MM$ | | | | |
| 1. Coal Cleaning | 160.849 | 160.8 | 0.0 | 0.03 |
| 1.4 Crushing and Drying | 154.667 | 154.6 | 0.1 | 0.04 |
| 2 Liquefaction | 1647.780 | 1647.8 | 0.0 | -0.00 |
| 3 Gas plant | 44.712 | 44.7 | 0.0 | 0.03 |
| 4 Naphtha Hydrotreater | 27.583 | 27.6 | 0.0 | -0.06 |
| 5 Gas Oil Hydrotreater | 130.873 | 130.7 | 0.2 | 0.13 |
| 6 H2 Recovery | 269.784 | 269.8 | 0.0 | -0.01 |
| 8 ROSE-SR | 74.618 | 74.6 | 0.0 | 0.02 |
| 9 H2 from Coal | 465.971 | 465.9 | 0.1 | 0.02 |
| 10 Air Separation | 337.638 | 337.7 | 0.1 | -0.02 |
| 11 Sulfur | 82.590 | 82.5 | 0.1 | 0.11 |
| 38 Ammonia Recovery | 70.964 | 71.0 | 0.0 | -0.05 |
| 39 Phenol Recovery | 23.569 | 23.5 | 0.1 | 0.29 |
| Total | 3491.598 | 3491.2 | 0.4 | 0.01 |

## 3.6 Detailed Operating Instructions

In order to run the ASPENS/SP computer program (Version 7) and simulate the baseline design, the following are required.

Hardware Requirements

An IBM compatible personal computer with the following:

1. Intel 80386 or 80486 main processor
2. Intel 80387 math coprocessor when an 80386 computer is used
3. A minimum of 10 Mbytes of RAM
4. A minimum of 40 Mbytes of available hard disk space
5. VGA graphics capability
6. DOS, Microsoft or IBM Version 3.3 or later
7. A mouse, preferably a Logitech three button mouse, or a Microsoft compatible two button mouse

Software Requirements

For simulating the baseline design for the nth plant, the following software files are required.

1. DCLN.INP - The ASPEN/SP input file for simulating the baseline design for the nth plant.

2. PLANTS.FOR - Fortran source code for the ASPEN user block models required for simulating the baseline design.

3. OTHERS.FOR - Additional Fortran source code required by the user block models in the above PLANT.FOR file.

4. ASP.BAT - A batch file for running ASPEN/SP with the OTHERS.FOR file.

5. DCLRPT.BAT - A batch file for combining the individual plant summary report files together into a single management summary report file.

6. DCLSTART.REP - The cover page for the management summary report file that is produced by the DCLREP.BAT file.

Appendix A contains a listing of the DCLN.INP file, the input file for the baseline design for the nth plant. Appendices B and C contain listings of the two Fortran source code files PLANTS.FOR and OTHERS.FOR. Appendix D contains listing of the ASP.BAT, DCLRPT.BAT and DCLSTART.REP files, the other three files required for execution the ASPEN/SP process simulation model.

The ASPEN/SP process simulation model of the coal liquefaction complex is executed as follows.

1. Enter ASPENSET to set up the ASPEN/SP system and place the computer in the ASPENSP\RUNS subdirectory. Once done, this step does not have to be repeated unless the computer has been rebooted.

2. All the required files, listed above, must be either in the ASPENSP\RUNS subdirectory or the ASPENSP\BAT subdirectory. If missing, copy PLANTS.FOR, OTHERS.FOR, and DCLN.INP into the ASPENSP\RUNS subdirectory. If missing, copy ASP.BAT, DCLRPT.BAT and DCLSTART.BAT into the ASPENSP\BAT subdirectory.

3. Compile the PLANTS.FOR file to create a PLANTS.OBJ file by typing
   F77 PLANTS <Enter>
   Once compiled, the file does not need to be recompiled unless the Fortran source code file, PLANTS.FOR, has been changed.

4. Compile the OTHERS.FOR file to create an OTHERS.OBJ file by typing
   F77 OTHERS <Enter>
   Once compiled, the file does not need to be recompiled unless the Fortran source code file, OTHERS.FOR, has been changed.

5. Execute the ASPEN/SP process simulation model by typing
   ASP PLANTS <Enter>
   and when prompted for the input file name enter
   DCLN <Enter>

   The ASPEN/SP process simulation program will now execute generating numerous output files. These will include several ASPEN/SP system generate files having the DCLN. filename. The model will also generate several DCL????.REP files containing the block model summary reports. For example, the block model summary report for Plant 4 will be called DCL04.REP. In addition, the model will generate two other files called DCLSUM.REP and DCL1.PRN. The DCL1.PRN file is the file used to transfer the process simulation model results to the LOTUS spreadsheet economics model.

6. Execute the DCLRPT.BAT file to combine all the individual plant summary report files into the combined summary report file called ALL.REP file by typing
   DCLRPT <Enter>
   This ALL.REP file then may be viewed or printed, as desired.

# 4. OVERVIEW OF THE LOTUS SPREADSHEET ECONOMICS MODEL

A LOTUS 2.2 spreadsheet was developed to analyze the economics of various coal liquefaction process scenarios using the output generated by the ASPEN/SP process simulation model. This economics model uses the flowrates, utilities, labor, and total capital information output from the ASPEN/SP process simulation model to study economic sensitivities of the economic and technical parameters.

The LOTUS 2.2 economics model is a two-dimensional spreadsheet into which the user imports a file generated by the ASPEN/SP coal liquefaction process simulation model. The ASPEN/SP model output file thus becomes an input for the LOTUS spreadsheet economics model, and along with other user controlled input parameters, drives the calculation of operating costs, capital costs, and revenue. These parameters are escalated as specified by user input parameters to generate a cash flow summary including the calculations of revenues, expenses, capital costs, depreciation, taxes, cash flow, internal rate of return, and net present value. Highlights of the cash flow summary are reported. These results allow the user to perform manual iterations to achieve, for example, a required rate of return or to check the sensitivities of various parameters on the project economics.

# 5. OPTION 1 -- LIQUEFACTION FEED COAL CLEANING BY HEAVY MEDIA SEPARATION

In this option, the feed coal to the liquefaction reactors is cleaned by heavy medium separation instead of jig cleaning as is done in the baseline case. The coal that goes to the gasification plant for hydrogen production is cleaned by jig cleaning only as in the baseline design. This case has been described in detail in Section 44 of the Task II Topical Report and is shown in Figure 5.1.

Figure 5.2 shows the ASPEN/SP block flow diagram for the process simulation model for option 1. This block flow diagram is significantly different than that used for the baseline design case because the model has to handle two levels of cleaned coal. This is accomplished in the model by having two coal cleaning plants; one plant that cleans the coal for liquefaction by heavy media separation, and one plant that cleans the coal for gasification by jigs. Splitter block S1, the inlet coal splitter, is used as a switch, (somewhat similar to a three-way railroad switch) to select which coal cleaning option is used. The entire cost of both coal cleaning plants is modeled in the heavy media coal cleaning plant, P1-ALT1. The utilities consumptions for the cleaning operations are distributed between the two cleaning plants.

In the baseline design, all 1000+ material that is not converted to lighter components leaves Plant 2, the coal liquefaction plant, in the ROSE-SR unit feed stream. That which does not leave in the ash concentrate stream going to the gasifier is recycled back to Plant 2. To maintain the same conversion levels as the baseline design in this option, some 1000+ material is withdrawn and sent directly to the gasifier. The ASPEN/SP simulation of this option does not withdraw this extra material and send it to the gasifier. The effect of ignoring this stream is that the coal conversion to useful products is slightly higher. Consequently, a little less hydrogen has to be generated in the gasifier, and the coal feed rate to the plant is slightly less. The end result is that the model is slightly optimistic in the amount of coal consumed relative to the engineering design.

The ASPEN/SP input file for this case, OPT1.INP is given in Appendix F. The primary changes between this file and the baseline design deal with the logic around the coal cleaning plants. For this option, the first parameter in splitter block S1 is set to 0.0, and the second one is set to 1.0. This directs all the coal that goes to liquefaction to stream 1S11 which is the feed stream to block P1-ALT1, the plant that cleans the coal by heavy media separation. In addition, the hydrocarbon rejection factor for Plant 8.1 has increased to 1.17 to match the reported performance of the ROSE-SR unit. Naturally, some comments and descriptive material in the input file also have been changed to correctly describe this option.

Since this is a simulation of an optional nth plant case, the variables LOSBL and LPLANT in Fortran block SUMMARY both must be set to 1. When variable LOSBL is set to 1, the optional case OBSL costing logic is used. When variable LPLANT is set to 1, the nth plant OSBL and engineering costing logic is used.

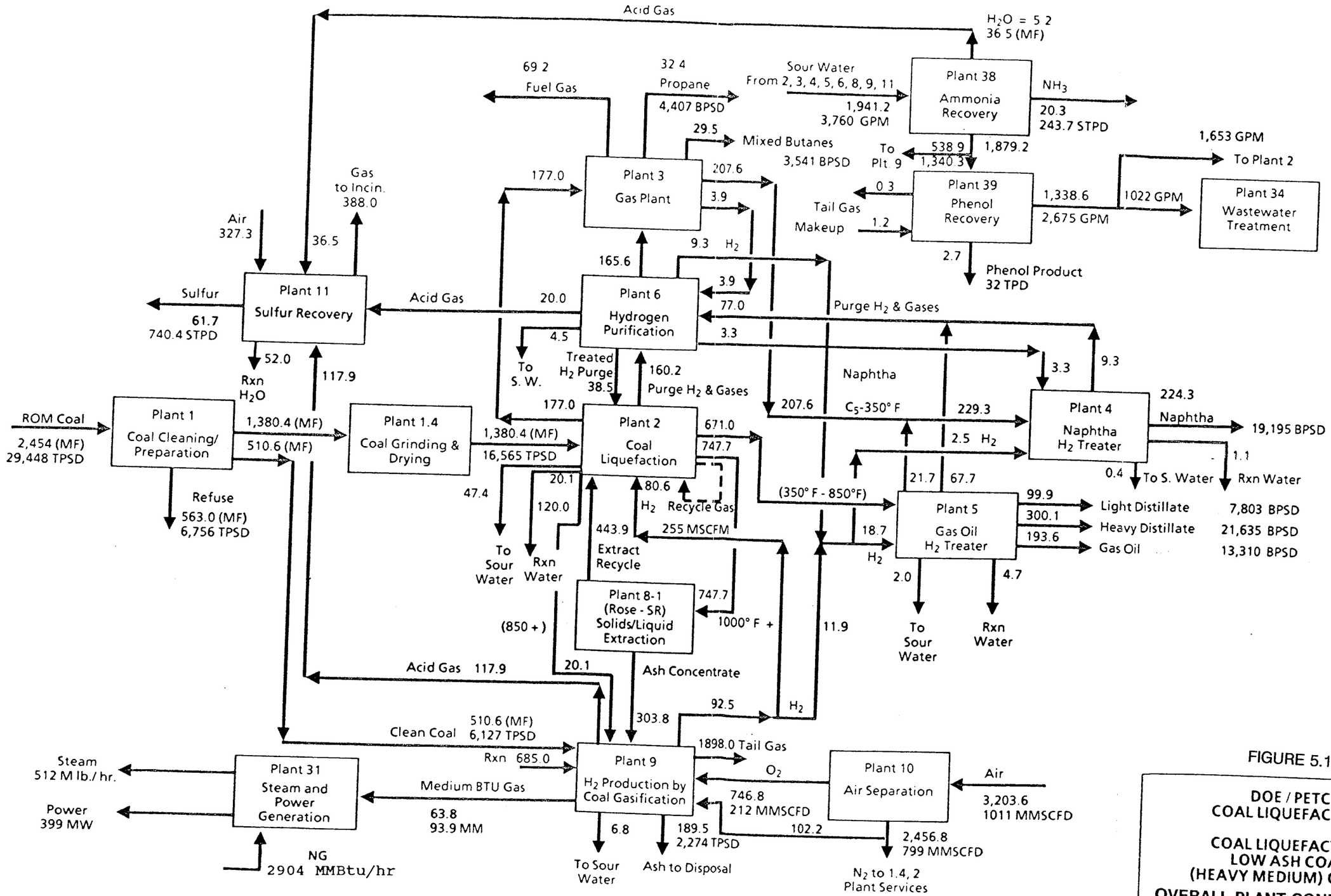


Revised 08/01/91

1091056-1

Notes:

1. Flow rates are in MLB/HR unless noted and on dry basis
2. Simplied water flow distribution diagram is shown on Figure 41.1
3. Minor streams including steam, water, sour water, and make-up amine are not shown on this diagram
4. Flow rates around plants #38, 39, 34 are shown on wet basis

FIGURE 5.1

DOE / PETC
COAL LIQUEFACTION

COAL LIQUEFACTION
LOW ASH COAL
(HEAVY MEDIUM) OPTION
OVERALL PLANT CONFIGURATION
AND
OVERALL MATERIAL BALANCE

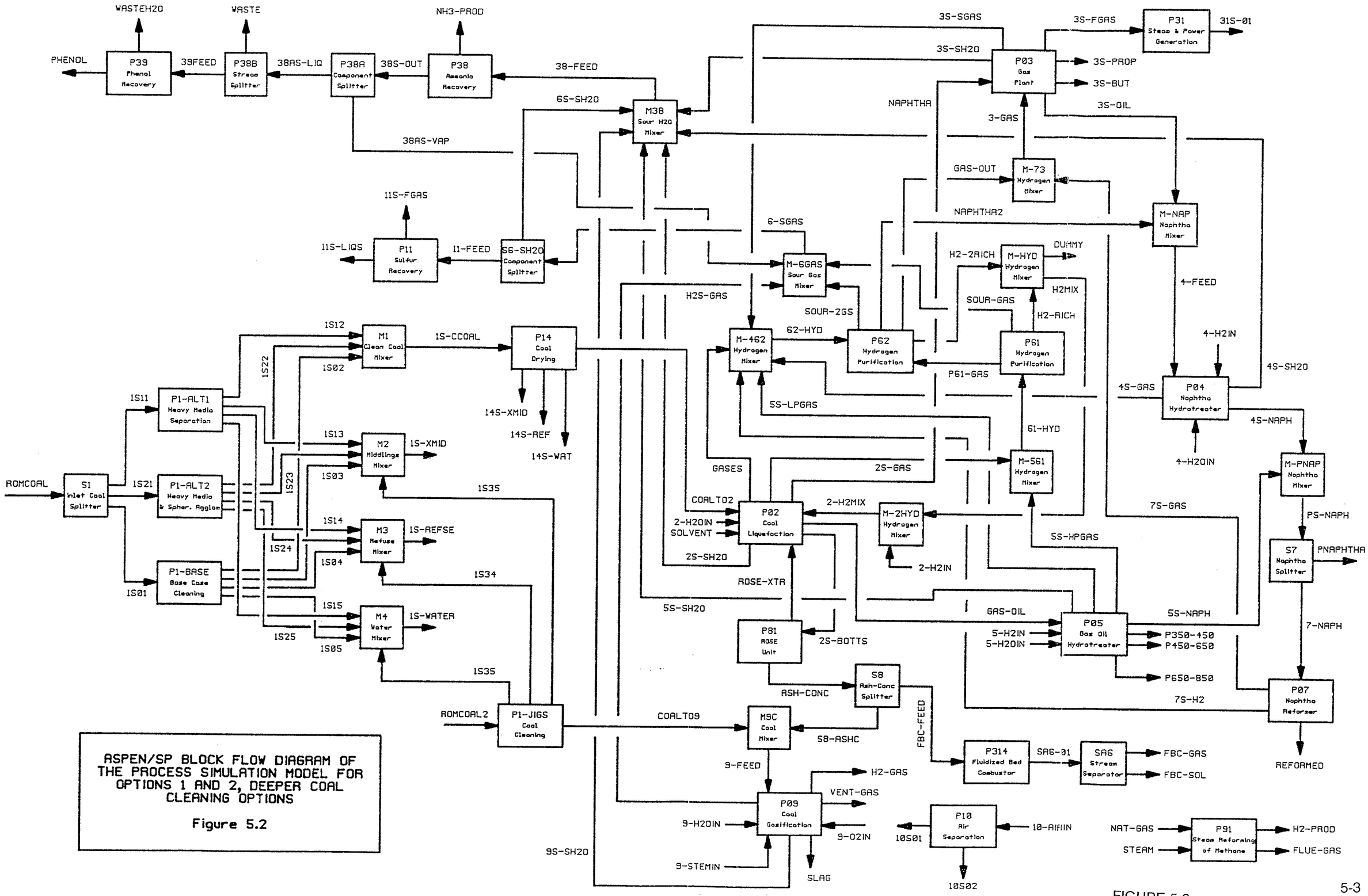


ASPEN/SP BLOCK FLOW DIAGRAM OF THE PROCESS SIMULATION MODEL FOR OPTIONS 1 AND 2, DEEPER COAL CLEANING OPTIONS

Figure 5.2

FIGURE 5.2

Table 5.1 compares the ASPEN/SP process model simulation results with those of the detailed option 1 design. The ROM coal feed rate is underpredicted by 123 tons/day or 0.42%. The natural gas rate is underpredicted by 3.27 MMM BTU/day or 3.9%. All the hydrocarbon product yields are predicted very well; the worst prediction being the naphtha which is overpredicted by 7 bbl/day.

The total installed capital is underpredicted by 34.6 MM$ or 1.05%. This difference is a result of the differences in the methods used for estimating the cost of Plant 2, the coal liquefaction plant. The Plant 2 Fortran user block model calculates the ISBL field cost of the coal liquefaction plant as a function of the dry clean coal feed rate. This is a slightly different procedure than was used to estimate the plant cost for the engineering design which used the total plant feed rate.

Table 5.1

**Comparison of the ASPEN/SP Process Simulation Model with the Detailed Process Design for Option 1 -- Liquefaction Feed Coal Cleaning by Heavy Media Separation**

| | Model | Design | Delta (M-D) | Percent Delta |
|---|---|---|---|---|
| ROM COAL FEED RATE, MTSD (dry) | 29.325 | 29.448 | -0.123 | -0.42 |
| COAL CLEANING REFUSE RATE, MTSD | 6.732 | 6.756 | -0.024 | -0.36 |
| ASH PRODUCTION RATE, MTSD | 2.233 | 2.274 | -0.041 | -1.80 |
| NATURAL GAS RATE, MMMBTU/SD | 80.062 | 83.328 | -3.266 | -3.92 |
| ELECTRICITY PURCHASE, MEGA-WH/SD | 0 | 0 | 0.000 | 0.00 |
| RAW WATER MAKE-UP, MMGSD | 17.513 | 17.343 | 0.170 | 0.98 |
| NAPHTHA PRODUCTION, MBSD | 19.202 | 19.195 | 0.007 | 0.04 |
| LT.DIST.PRODUCTION, MBSD | 7.806 | 7.803 | 0.003 | 0.04 |
| HVY.DIST. PRODUCTION, MBSD | 21.638 | 21.635 | 0.003 | 0.01 |
| GAS OIL PRODUCTION, MBSD | 13.312 | 13.310 | 0.002 | 0.02 |
| LIQUID PROPANE PRODUCTION, MBSD | 4.408 | 4.407 | 0.001 | 0.02 |
| MIXED BUTANES PRODUCTION, MBSD | 3.541 | 3.541 | 0.000 | 0.00 |
| AMMONIA PRODUCTION, MTSD | 0.233 | 0.243 | -0.010 | -4.12 |
| PHENOL PRODUCTION, MTSD | 0.032 | 0.032 | 0.000 | 0.00 |
| SULFUR PRODUCTION, MTSD | 0.689 | 0.740 | -0.051 | -6.89 |
| NUMBER OF OPERATORS/BOARDMEN | 415 | 415 | 0 | 0.00 |
| TOT.INSTALLED CAPITAL, $MM (E-YR) | 3327.840 | 3293.200 | 34.640 | 1.05 |
| Individual Plant Costs in MM$ | | | | |
| 1. Coal Cleaning | 210.892 | 214.8 | -3.9 | -1.82 |
| 1.4 Crushing and Drying | 143.439 | 143.9 | -0.5 | -0.32 |
| 2 Liquefaction | 1534.814 | 1487.9 | 46.9 | 3.15 |
| 3 Gas plant | 42.588 | 42.6 | 0.0 | -0.03 |
| 4 Naphtha Hydrotreater | 26.278 | 26.3 | 0.0 | -0.08 |
| 5 Gas Oil Hydrotreater | 124.667 | 124.6 | 0.1 | 0.05 |
| 6 H2 Recovery | 257.057 | 257.1 | 0.0 | -0.02 |
| 8 ROSE-SR | 62.999 | 61.9 | 1.1 | 1.78 |
| 9 H2 from Coal | 444.019 | 443.9 | 0.1 | 0.03 |
| 10 Air Separation | 319.210 | 321.8 | -2.6 | -0.80 |
| 11 Sulfur | 74.314 | 78.6 | -4.3 | -5.45 |
| 38 Ammonia Recovery | 65.112 | 67.5 | -2.4 | -3.54 |
| 39 Phenol Recovery | 22.451 | 22.3 | 0.2 | 0.68 |
| Total | 3327.840 | 3293.2 | 34.6 | 1.05 |

# 6. OPTION 2 -- LIQUEFACTION FEED COAL CLEANING BY SPHERICAL AGGLOMERATION

In this option, the feed coal to the liquefaction reactors is cleaned by spherical agglomeration instead of jig cleaning as is done in the baseline case. The coal that goes to the gasification plant for hydrogen production is cleaned by jig cleaning only as in the baseline design. This case has been described in detail in Section 45 of the Task II Topical Report and is shown in Figure 6.1.

Figure 5.2, which shows the ASPEN/SP block flow diagram for the process simulation model for option 1, also is applicable for this case, option 2. This block flow diagram is significantly different than that used for the baseline design case because the model has to handle two levels of cleaned coal. This is accomplished in the model by having two coal cleaning plants; one plant that cleans the coal for liquefaction by spherical agglomeration, and one plant that cleans the coal for gasification by jigs. Splitter block S1, the inlet coal splitter, is used as a switch, (somewhat similar to a three-way railroad switch) to select which coal cleaning option is used. The entire cost of both coal cleaning plants is modeled in the spherical agglomeration coal cleaning plant, P1-ALT2. The utilities consumptions for the cleaning operations are distributed between the two cleaning plants.

In the baseline design, all 1000+ material that is not converted to lighter components leaves Plant 2, the coal liquefaction plant, in the ROSE-SR unit feed stream. That which does not leave in the ash concentrate stream going to the gasifier is recycled back to Plant 2. To maintain the same conversion levels as the baseline design in this option, some 1000+ material is withdrawn and sent directly to the gasifier. The ASPEN/SP simulation of this option does not withdraw this extra material and send it to the gasifier. The effect of ignoring this stream is that the coal conversion to useful products is slightly higher. Consequently, a little less hydrogen has to be generated in the gasifier, and the coal feed rate to the plant is slightly less. The end result is that the model is somewhat optimistic in the amount of coal consumed relative to the engineering design.

The ASPEN/SP input file for this case, OPT2.INP is given in Appendix G. The primary changes between this file and the baseline design deal with the logic around the coal cleaning plants. For this option, the first parameter in splitter block S1 is set to 0.0, and the third one is set to 1.0. This directs all the coal that goes to liquefaction to stream 1S21 which is the feed stream to block P1-ALT2, the plant that cleans the coal by spherical agglomeration. In addition, the hydrocarbon rejection factor for Plant 8.1 has increased to 1.6 to match the reported performance of the ROSE-SR unit. Naturally, some comments and descriptive material in the input file also have been changed to correctly describe this option.

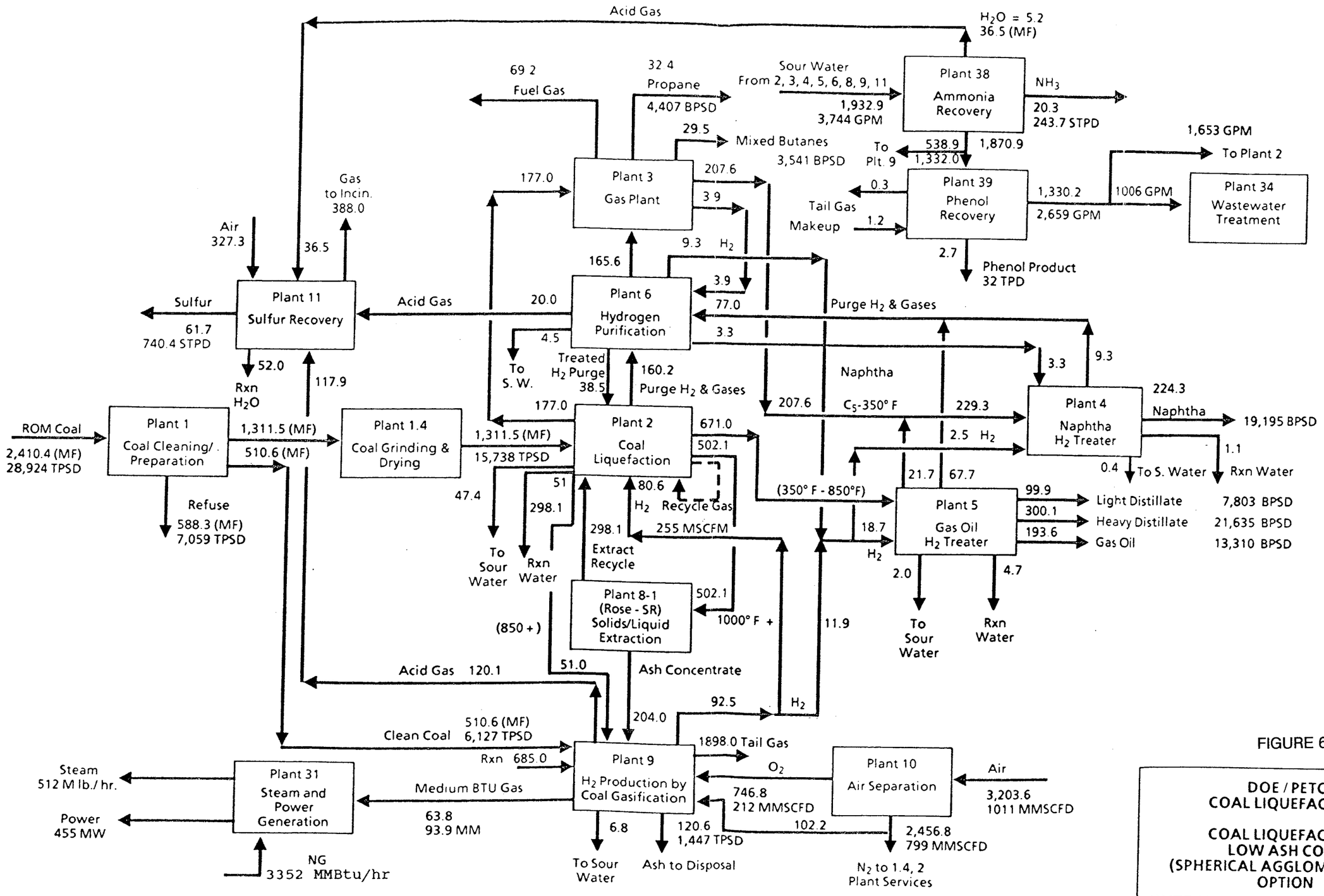


FIGURE 6.1

**DOE / PETC**
**COAL LIQUEFACTION**

**COAL LIQUEFACTION**
**LOW ASH COAL**
**(SPHERICAL AGGLOMERATION)**
**OPTION**

**OVERALL PLANT CONFIGURATION**
**AND**
**OVERALL MATERIAL BALANCE**

Revised 08/01/91

1091056-1

Notes:

1. Flow rates are in MLB/HR unless noted and on dry basis
2. Simplied water flow distribution diagram is shown on Figure 41.1
3. Minor streams including steam, water, sour water, and make-up amine are not shown on this diagram
4. Flow rates around plants #38, 39, 34 are shown on wet basis

Since this is a simulation of an optional nth plant case, the variables LOSBL and LPLANT in Fortran block SUMMARY both must be set to 1. When variable LOSBL is set to 1, the optional case OBSL costing logic is used. When variable LPLANT is set to 1, the nth plant OSBL and engineering costing logic is used.

Table 6.1 compares the ASPEN/SP process model simulation results with those of the detailed option 2 design. The ROM coal feed rate is underpredicted by 332 tons/day or 1.15%. The natural gas rate is underpredicted by 3.07 MMM BTU/day or 2.9%. The hydrocarbon product yields are not predicted as well as the previous case; the worst prediction being the gas oil which is overpredicted by 115 bbl/day or 0.86%.

The total installed capital is underpredicted by 102.7 MM$ or 2.9%. This difference is a result of the differences in the methods used for estimating the cost of Plant 2, the coal liquefaction plant. The Plant 2 Fortran user block model calculates the ISBL field cost of the coal liquefaction plant as a function of the dry clean coal feed rate. This is a slightly different procedure than was used to estimate the plant cost for the engineering design which used the total plant feed rate.

## Table 6.1

**Comparison of the ASPEN/SP Process Simulation Model with the Detailed Process Design for Option 2 -- Liquefaction Feed Coal Cleaning by Spherical Agglomeration**

| | Model | Design | Delta (M-D) | Percent Delta |
|---|---|---|---|---|
| ROM COAL FEED RATE, MTSD (dry) | 28.592 | 28.924 | -0.332 | -1.15 |
| COAL CLEANING REFUSE RATE, MTSD | 6.993 | 7.059 | -0.066 | -0.93 |
| ASH PRODUCTION RATE, MTSD | 1.341 | 1.447 | -0.106 | -7.33 |
| NATURAL GAS RATE, MMMBTU/SD | 101.473 | 104.544 | -3.071 | -2.94 |
| ELECTRICITY PURCHASE, MEGA-WH/SD | 0 | 0 | 0.000 | 0.00 |
| RAW WATER MAKE-UP, MMGSD | 17.075 | 18.599 | -1.524 | -8.19 |
| NAPHTHA PRODUCTION, MBSD | 19.367 | 19.195 | 0.172 | 0.90 |
| LT.DIST.PRODUCTION, MBSD | 7.872 | 7.803 | 0.069 | 0.88 |
| HVY.DIST. PRODUCTION, MBSD | 21.823 | 21.635 | 0.188 | 0.87 |
| GAS OIL PRODUCTION, MBSD | 13.425 | 13.310 | 0.115 | 0.86 |
| LIQUID PROPANE PRODUCTION, MBSD | 4.446 | 4.407 | 0.039 | 0.88 |
| MIXED BUTANES PRODUCTION, MBSD | 3.572 | 3.541 | 0.031 | 0.88 |
| AMMONIA PRODUCTION, MTSD | 0.236 | 0.244 | -0.008 | -3.16 |
| PHENOL PRODUCTION, MTSD | 0.032 | 0.032 | 0.000 | 0.00 |
| SULFUR PRODUCTION, MTSD | 0.598 | 0.740 | -0.142 | -19.19 |
| NUMBER OF OPERATORS/BOARDMEN | 415 | 415 | 0 | 0.00 |
| TOT.INSTALLED CAPITAL, $MM (E-YR) | 3655.037 | 3552.300 | 102.737 | 2.89 |
| Individual Plant Costs in MM$ | | | | |
| 1. Coal Cleaning | 621.373 | 621.3 | 0.1 | 0.01 |
| 1.4 Crushing and Drying | 137.326 | 142.5 | -5.2 | -3.63 |
| 2 Liquefaction | 1479.689 | 1357.7 | 122.0 | 8.98 |
| 3 Gas plant | 42.830 | 42.6 | 0.2 | 0.54 |
| 4 Naphtha Hydrotreater | 26.456 | 26.3 | 0.2 | 0.59 |
| 5 Gas Oil Hydrotreater | 125.459 | 124.6 | 0.9 | 0.69 |
| 6 H2 Recovery | 257.568 | 257.1 | 0.5 | 0.18 |
| 8 ROSE-SR | 49.793 | 46.4 | 3.4 | 7.31 |
| 9 H2 from Coal | 444.378 | 444.0 | 0.4 | 0.09 |
| 10 Air Separation | 315.237 | 321.8 | -6.6 | -2.04 |
| 11 Sulfur | 66.496 | 78.6 | -12.1 | -15.40 |
| 38 Ammonia Recovery | 65.827 | 67.2 | -1.4 | -2.04 |
| 39 Phenol Recovery | 22.606 | 22.2 | 0.4 | 1.83 |
| Total | 3655.038 | 3552.3 | 102.7 | 2.89 |

# 7. OPTION 3 -- THERMAL-CATALYTIC LIQUEFACTION REACTOR CONFIGURATION

In this option, the reactor configuration in Plant 2 is changed from that of the baseline design option (catalytic-catalytic) to thermal-catalytic, where the first stage is the thermal reactor and the second stage is the catalytic reactor. This case has been described in detail in Section 46 of the Task II Topical Report and is shown in Figure 7.1.

Figure 3.1, which shows the ASPEN/SP block flow diagram for the process simulation model for the baseline design, is very similar to that for this case, option 3. The only difference between this case and that of the baseline design is that the 2S-BOTTS stream leaving the coal liquefaction plant (block PO2TC) goes to a flow splitter (block P02A) where it is split into two streams. One of these streams (S2-GASIF), which only contains a portion of the 850-1000+ F material, goes to the gasifier, and the other (81-FEED), which contains all the unreacted coal and the remainder of the 850-1000+ F material, goes to the ROSE-SR unit.

The ASPEN/SP input file for this case, OPT3.INP is given in Appendix H. The primary changes between this file and the baseline design besides those associated with the P02A splitter block are the different parameters that are used in the coal liquefaction plant (Block P02TC) and the coal gasification plant. Naturally, some comments and descriptive material in the input file also have been changed to correctly describe this option.

Since this is a simulation of an optional nth plant case, the variables LOSBL and LPLANT in Fortran block SUMMARY both must be set to 1. When variable LOSBL is set to 1, the optional case OBSL costing logic is used. When variable LPLANT is set to 1, the nth plant OSBL and engineering costing logic is used.

Table 7.1 compares the ASPEN/SP process model simulation results with those of the detailed option 3 design. The ROM coal feed rate is underpredicted by 30 tons/day or 0.11%. The natural gas rate is underpredicted by 6.4 MMM BTU/day or 7.9%. The hydrocarbon product yields are predicted reasonably well with the worst prediction being the naphtha which is overpredicted by 217 bbl/day or 1.4%.

The total installed capital is overpredicted by 12.2 MM$ or 0.36%.

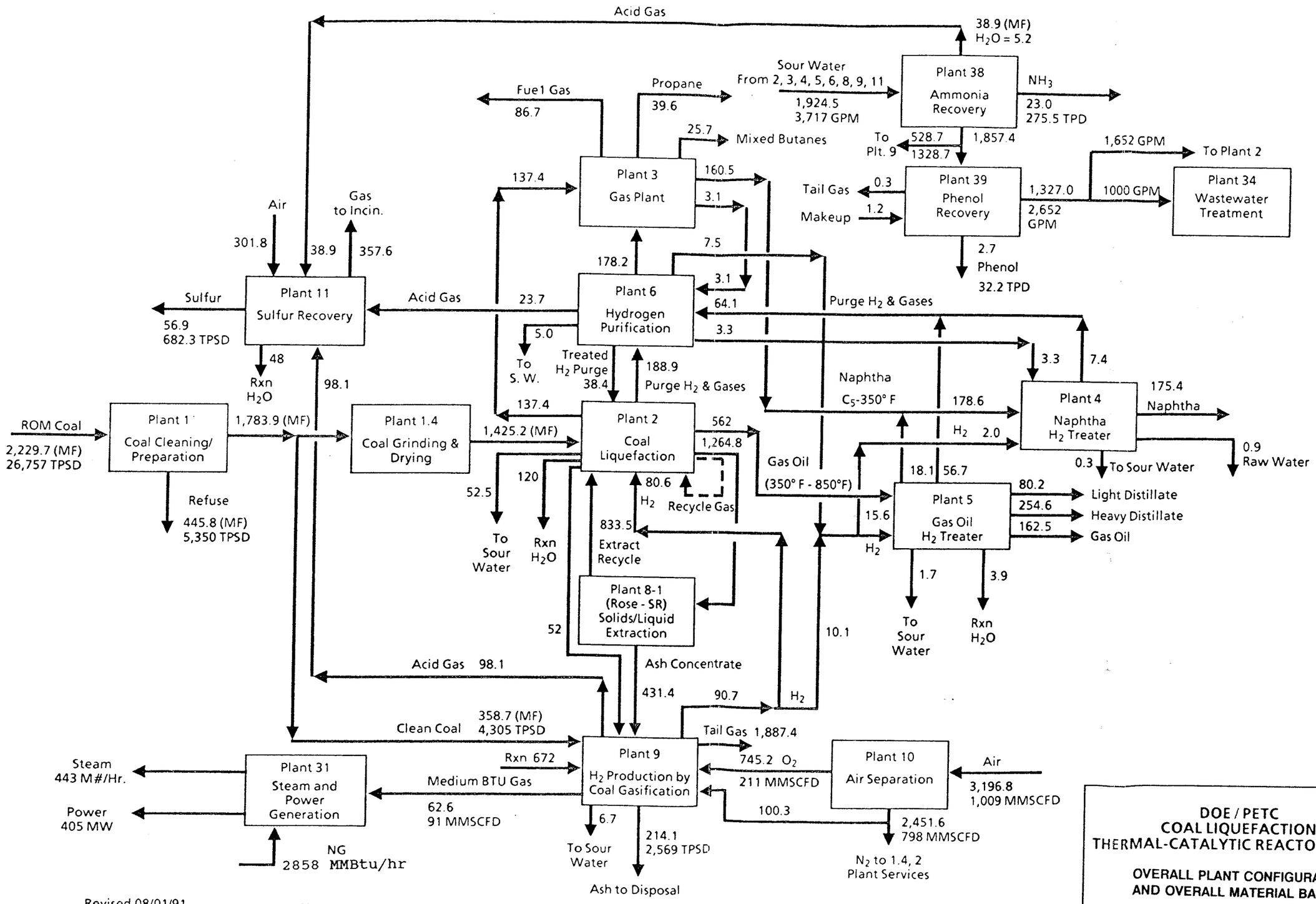


Revised 08/01/91

0891016-6

Notes:

1. Flow rates are in MLB/HR unless noted and on dry basis.
2. Flow rates around plants #38, 39, 34 are shown on wet basis.

**DOE / PETC**
**COAL LIQUEFACTION**
**THERMAL-CATALYTIC REACTOR OPTION**

**OVERALL PLANT CONFIGURATION AND OVERALL MATERIAL BALANCE**

FIGURE 7.1

## Table 7.1

**Comparison of the ASPEN/SP Process Simulation Model with the Detailed Process Design for Option 3 -- Thermal-Catalytic Liquefaction Reactor Configuration**

| | Model | Design | Delta (M-D) | Percent Delta |
|---|---|---|---|---|
| ROM COAL FEED RATE, MTSD (dry) | 26.727 | 26.757 | -0.030 | -0.11 |
| COAL CLEANING REFUSE RATE, MTSD | 5.345 | 5.350 | -0.005 | -0.09 |
| ASH PRODUCTION RATE, MTSD | 2.588 | 2.569 | 0.019 | 0.74 |
| NATURAL GAS RATE, MMMBTU/SD | 86.734 | 80.352 | 6.382 | 7.94 |
| ELECTRICITY PURCHASE, MEGA-WH/SD | 0 | 0 | 0.000 | 0.00 |
| RAW WATER MAKE-UP, MMGSD | 17.104 | 17.123 | -0.019 | -0.11 |
| NAPHTHA PRODUCTION, MBSD | 15.227 | 15.010 | 0.217 | 1.44 |
| LT.DIST.PRODUCTION, MBSD | 6.267 | 6.264 | 0.003 | 0.04 |
| HVY.DIST. PRODUCTION, MBSD | 18.364 | 18.355 | 0.009 | 0.05 |
| GAS OIL PRODUCTION, MBSD | 11.179 | 11.172 | 0.007 | 0.06 |
| LIQUID PROPANE PRODUCTION, MBSD | 5.318 | 5.386 | -0.068 | -1.27 |
| MIXED BUTANES PRODUCTION, MBSD | 3.167 | 3.085 | 0.082 | 2.66 |
| AMMONIA PRODUCTION, MTSD | 0.273 | 0.276 | -0.003 | -0.91 |
| PHENOL PRODUCTION, MTSD | 0.032 | 0.032 | 0.000 | -0.62 |
| SULFUR PRODUCTION, MTSD | 0.682 | 0.682 | 0.000 | -0.04 |
| NUMBER OF OPERATORS/BOARDMEN | 436 | 436 | 0 | 0.00 |
| TOT.INSTALLED CAPITAL, $MM (E-YR) | 3439.134 | 3426.950 | 12.184 | 0.36 |
| Individual Plant Costs in MM$ | | | | |
| 1. Coal Cleaning | 145.914 | 145.9 | 0.0 | 0.01 |
| 1.4 Crushing and Drying | 147.383 | 147.3 | 0.1 | 0.06 |
| 2 Liquefaction | 1678.994 | 1679.0 | 0.0 | 0.00 |
| 3 Gas plant | 40.151 | 40.1 | 0.1 | 0.13 |
| 4 Naphtha Hydrotreater | 21.819 | 21.7 | 0.1 | 0.55 |
| 5 Gas Oil Hydrotreater | 109.242 | 109.1 | 0.1 | 0.13 |
| 6 H2 Recovery | 271.918 | 271.9 | 0.0 | 0.01 |
| 8 ROSE-SR | 90.431 | 90.4 | 0.0 | 0.03 |
| 9 H2 from Coal | 437.009 | 437.3 | -0.3 | -0.07 |
| 10 Air Separation | 326.375 | 321.3 | 5.1 | 1.58 |
| 11 Sulfur | 73.749 | 73.8 | -0.1 | -0.07 |
| 38 Ammonia Recovery | 73.695 | 67.0 | 6.7 | 9.99 |
| 39 Phenol Recovery | 22.454 | 22.2 | 0.3 | 1.14 |
| Total | 3439.134 | 3427.0 | 12.1 | 0.35 |

# 8. OPTION 4 -- CATALYTIC-CATALYTIC REACTOR CONFIGURATION WITH VENT GAS SEPARATION

In this option, the reactor configuration in Plant 2 is changed from that of the baseline design option (catalytic-catalytic) to that where both stages are catalytic with interstage vent gas separation. The design basis is the same as the baseline design. This case has been described in detail in Section 47 of the Task II Topical Report and is shown in Figure 8.1.

Figure 3.1, which shows the ASPEN/SP block flow diagram for the process simulation model for the baseline design is the same as that for this case, Option 4.

The ASPEN/SP input file for this case, OPT4.INP is given in Appendix I. Since Plant 2, the coal liquefaction plant, is modeled by a block model which just predicts the overall input/output material balance, the only difference between this case and that of the baseline design are the input parameters for the block model of Plant 2, the coal liquefaction plant. Naturally, some comments and descriptive material in the input file also have been changed to correctly describe this option.

Since this is a simulation of an optional nth plant case, the variables LOSBL and LPLANT in Fortran block SUMMARY both must be set to 1. When variable LOSBL is set to 1, the optional case OBSL costing logic is used. When variable LPLANT is set to 1, the nth plant OSBL and engineering costing logic is used.

Table 8.1 compares the ASPEN/SP process model simulation results with those of the detailed option 4 design. The predictions agree very well with the detailed option 4 design. The hydrocarbon product yields are predicted very well with the worst prediction being the naphtha which is overpredicted by 13 bbl/day or 0.07%. The total installed capital is overpredicted by 0.5 MM$ or 0.01%.

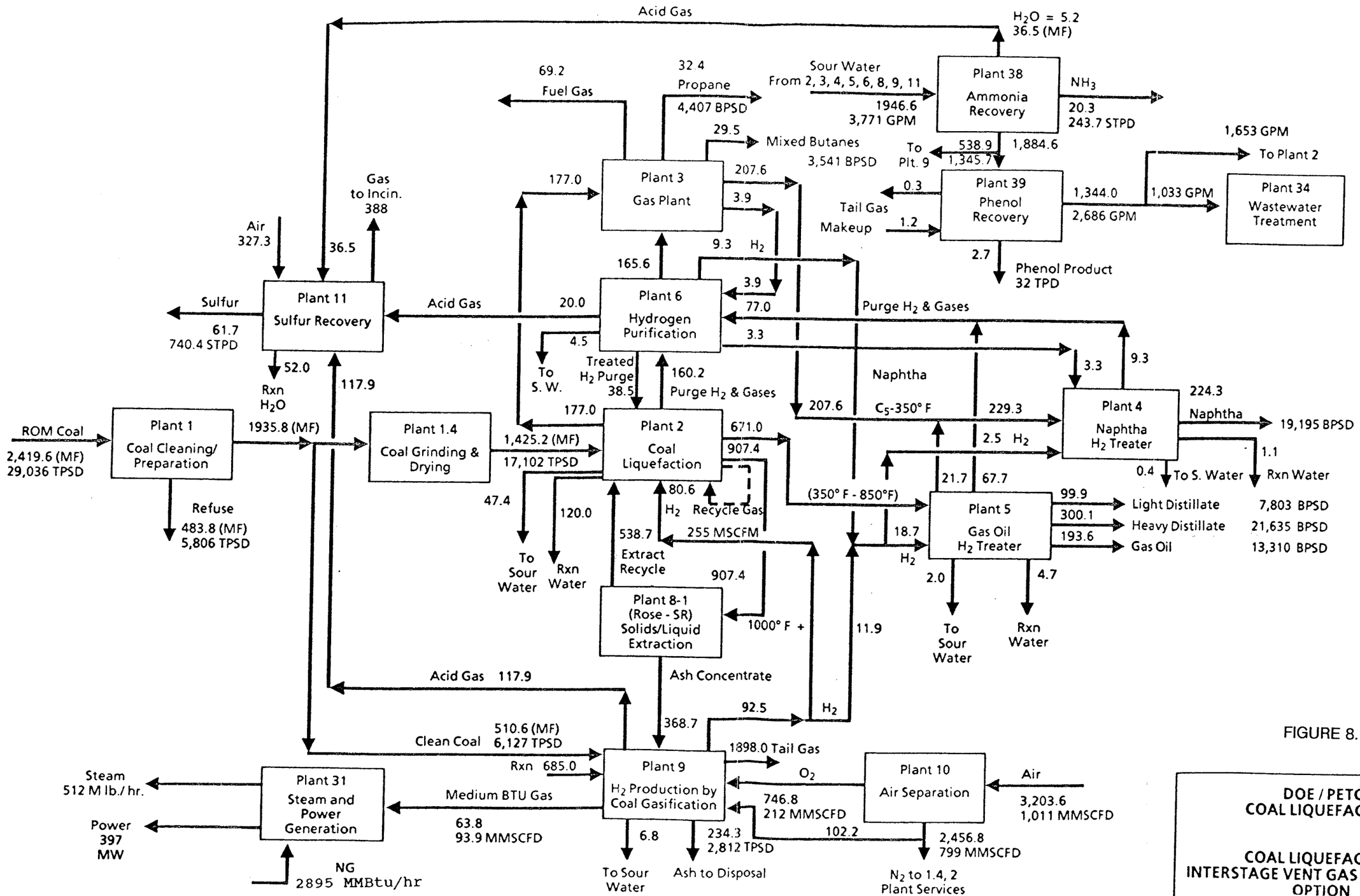


FIGURE 8.1

**DOE / PETC**
**COAL LIQUEFACTION**

**COAL LIQUEFACTION**
**INTERSTAGE VENT GAS SEPARATION OPTION**
**OVERALL PLANT CONFIGURATION**
**AND**
**OVERALL MATERIAL BALANCE**

Revised 08/01/91

1091056-1

Notes:

1. Flow rates are in MLB/HR unless noted and on dry basis
2. Simplied water flow distribution diagram is shown on Figure 41.1
3. Minor streams including steam, water, sour water, and make-up amine are not shown on this diagram
4. Flow rates around plants #38, 39, 34 are shown on wet basis

## Table 8.1

**Comparison of the ASPEN/SP Process Simulation Model with the Detailed Process Design for Option 4 -- Catalytic-Catalytic Liquefaction Reactor Configuration with Vent Gas Separation**

| | Model | Design | Delta (M-D) | Percent Delta |
|---|---|---|---|---|
| ROM COAL FEED RATE, MTSD (dry) | 29.035 | 29.035 | 0.000 | 0.00 |
| COAL CLEANING REFUSE RATE, MTSD | 5.807 | 5.806 | 0.001 | 0.02 |
| ASH PRODUCTION RATE, MTSD | 2.812 | 2.812 | 0.000 | 0.00 |
| NATURAL GAS RATE, MMMBTU/SD | 83.847 | 83.784 | 0.063 | 0.08 |
| ELECTRICITY PURCHASE, MEGA-WH/SD | 0 | 0 | 0.000 | 0.00 |
| RAW WATER MAKE-UP, MMGSD | 17.340 | 17.340 | 0.000 | 0.00 |
| NAPHTHA PRODUCTION, MBSD | 19.208 | 19.195 | 0.013 | 0.07 |
| LT.DIST.PRODUCTION, MBSD | 7.809 | 7.803 | 0.006 | 0.08 |
| HVY.DIST. PRODUCTION, MBSD | 21.648 | 21.635 | 0.013 | 0.06 |
| GAS OIL PRODUCTION, MBSD | 13.319 | 13.310 | 0.009 | 0.07 |
| LIQUID PROPANE PRODUCTION, MBSD | 4.411 | 4.407 | 0.004 | 0.09 |
| MIXED BUTANES PRODUCTION, MBSD | 3.544 | 3.541 | 0.003 | 0.08 |
| AMMONIA PRODUCTION, MTSD | 0.244 | 0.244 | 0.000 | 0.00 |
| PHENOL PRODUCTION, MTSD | 0.032 | 0.032 | 0.000 | 0.00 |
| SULFUR PRODUCTION, MTSD | 0.741 | 0.741 | 0.000 | 0.00 |
| NUMBER OF OPERATORS/BOARDMEN | 415 | 415 | 0 | 0.00 |
| TOT.INSTALLED CAPITAL, $MM (E-YR) | 3327.180 | 3326.672 | 0.508 | 0.02 |
| Individual Plant Costs in MM$ | | | | |
| 1. Coal Cleaning | 153.275 | 153.2 | 0.1 | 0.05 |
| 1.4 Crushing and Drying | 147.383 | 147.3 | 0.1 | 0.06 |
| 2 Liquefaction | 1570.186 | 1570.1 | 0.1 | 0.01 |
| 3 Gas plant | 42.607 | 42.6 | 0.0 | 0.02 |
| 4 Naphtha Hydrotreater | 26.284 | 26.3 | 0.0 | -0.06 |
| 5 Gas Oil Hydrotreater | 124.711 | 124.6 | 0.1 | 0.09 |
| 6 H2 Recovery | 257.080 | 257.1 | 0.0 | -0.01 |
| 8 ROSE-SR | 71.104 | 71.1 | 0.0 | 0.01 |
| 9 H2 from Coal | 444.028 | 444.0 | 0.0 | 0.01 |
| 10 Air Separation | 321.739 | 321.8 | -0.1 | -0.02 |
| 11 Sulfur | 78.701 | 78.6 | 0.1 | 0.13 |
| 38 Ammonia Recovery | 67.622 | 67.6 | 0.0 | 0.03 |
| 39 Phenol Recovery | 22.459 | 22.4 | 0.1 | 0.26 |
| Total | 3327.179 | 3326.7 | 0.5 | 0.01 |

# 9. OPTION 5 -- FLUID COKING OF VACUUM BOTTOMS

In this option, the vacuum bottoms processing step is changed from Kerr McGee's ROSE-SR critical solvent extraction process to a fluid coking unit based on Exxon technology. As a result of this change, most of the other plants in the complex are affected to some degree, and especially Plant 2, the coal liquefaction plant. This case has been described in detail in Section 47 of the Task II Topical Report and is shown in Figure 9.1.

The fluid coking plant takes the vacuum bottoms stream from Plant 2 (main feed stream) and thermally cracks it into lighter liquids, gases and solid coke. The Fortran model for the fluid coking plant has four inlet streams, the main hydrocarbon feed stream (the vacuum tower bottoms stream from Plant 2), and the necessary utilities streams; air, water and steam. It generates six outlet streams; fuel gas, naphtha, gas-oil, bottoms, coke and sour water.

```
                        ----------------------
                        |                    |-----> Fuel Gases
Main Feed  -->          |                    |
                        |     Plant 8.2      |-----> Naphtha
Air  -------->          |                    |
                        |       Fluid        |-----> Gas-oil
Steam  ------>          |       Coking       |
                        |       Plant        |-----> Bottoms
Water ------->          |                    |
                        |                    |-----> Coke
                        |                    |
                        |                    |-----> Sour water
                        ----------------------
```

The Fortran block model of the fluid coking plant is a simplified model which distributes the inlet hydrocarbons in the feed by a fixed ratio to match the detailed engineering design. As in the detailed engineering design, the composition of the hydrocarbon products are assumed to be the same as those produced in the coal liquefaction plant. All ash and unconverted coal leaves with the solid coke.

The Fortran user block model for the fluid coking plant requires no additional INTEGER or REAL input parameters other than those previously discussed in Section 3.

Figure 9.2 shows the ASPEN/SP block flow diagram for the process simulation model for this case, option 5.

The ASPEN/SP input file for this case, OPT5.INP is given in Appendix J. There are substantial changes from the input file used for the baseline design. Because there is no liquid recycle stream from the fluid coking plant (block P82) to the coal liquefaction plant (block P02), one convergence block was eliminated. However, the Fortran user block model for Plant 2 requires this recyle stream as an input stream. In this option, this

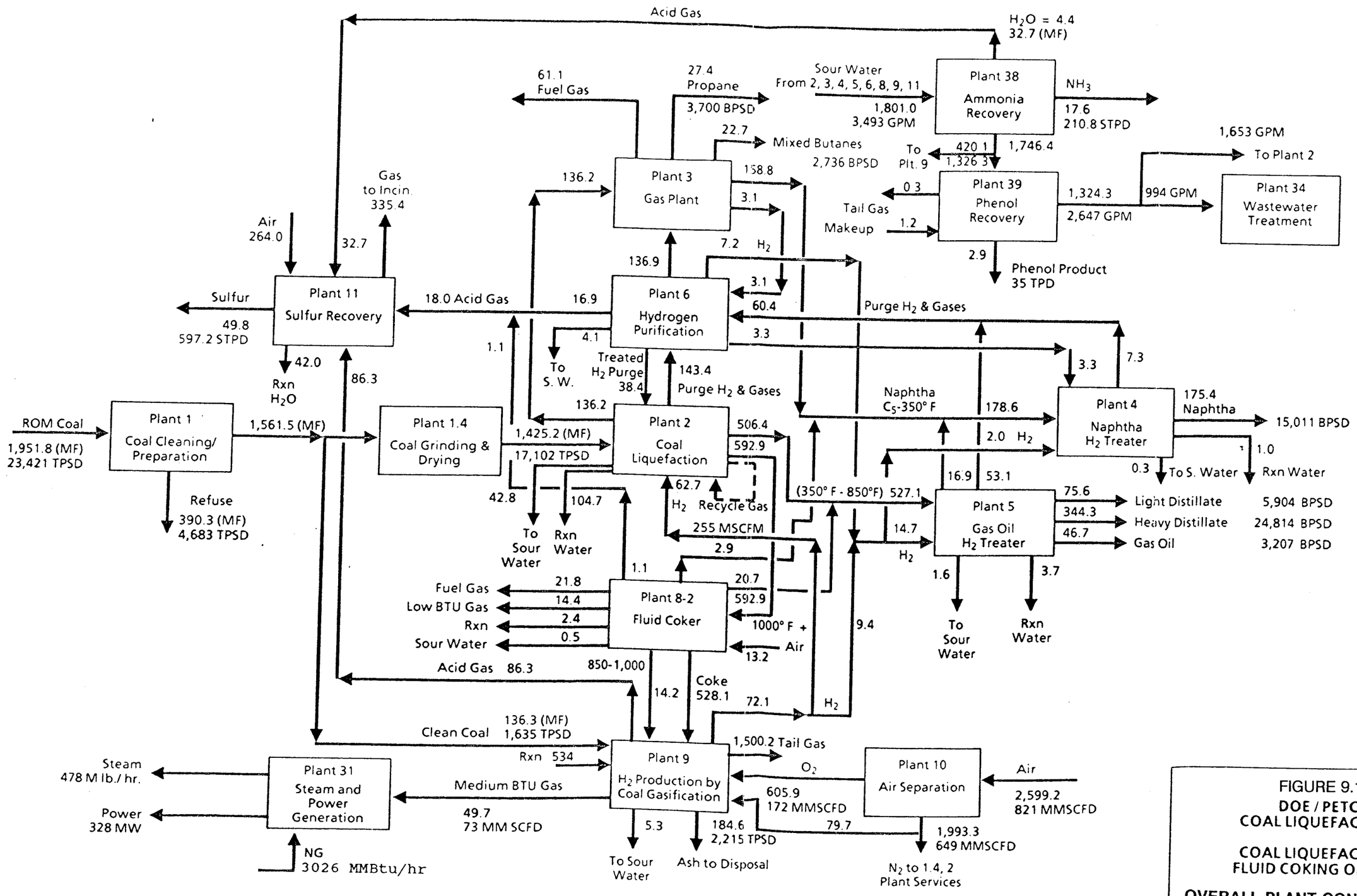


FIGURE 9.1
DOE / PETC
COAL LIQUEFACTION

COAL LIQUEFACTION
FLUID COKING OPTION

**OVERALL PLANT CONFIGURATION AND OVERALL MATERIAL BALANCE**

Revised 08/26/91

0991004-5

Notes:

1. Flow rates are in MLB/HR unless noted and on dry basis
2. Simplied water flow distribution diagram is shown on Figure 41.1
3. Minor streams including steam, water, sour water, and make-up amine are not shown on this diagram
4. Flow rates around plants #38, 39, 34 are shown on wet basis

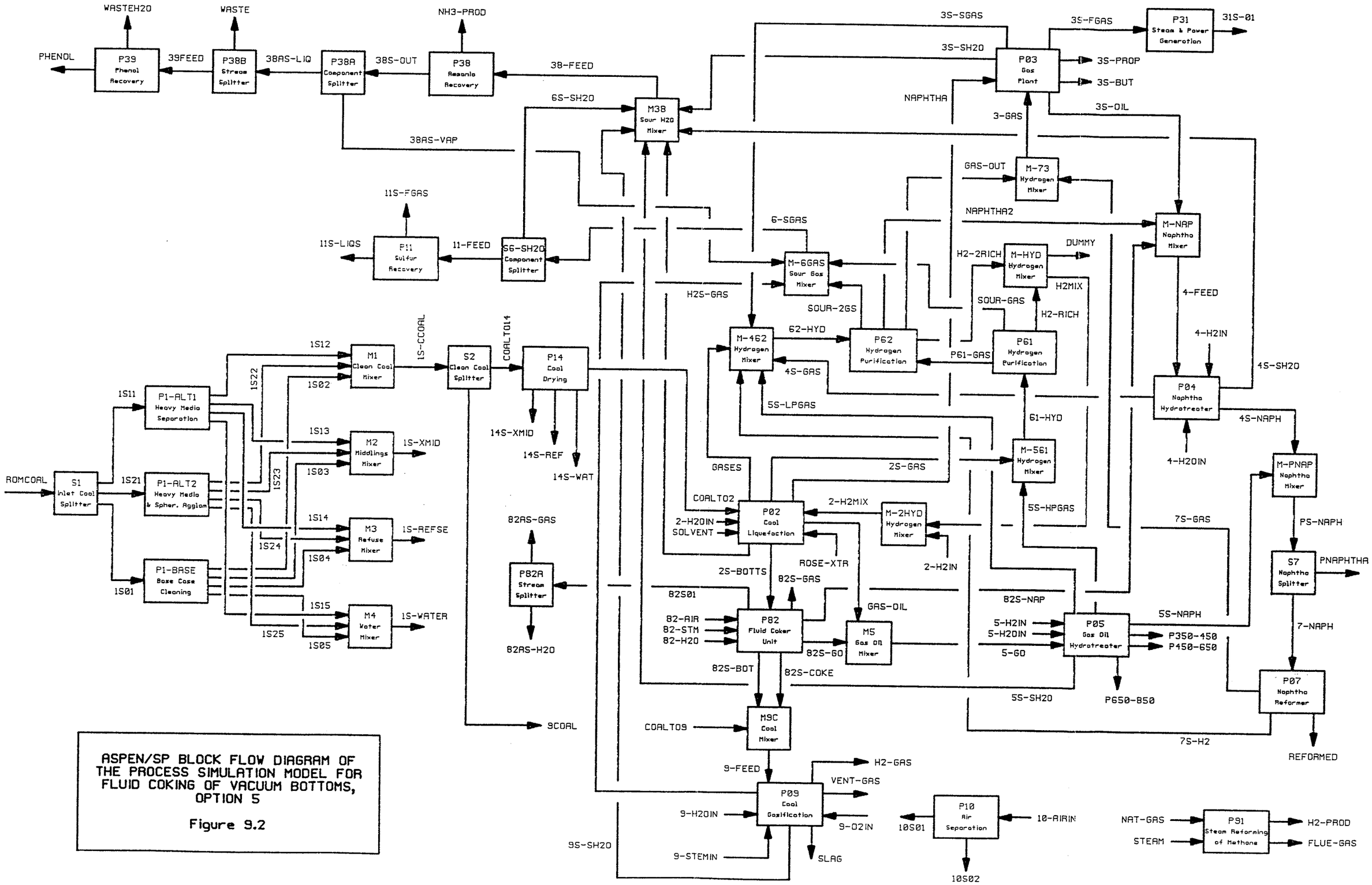


ASPEN/SP BLOCK FLOW DIAGRAM OF THE PROCESS SIMULATION MODEL FOR FLUID COKING OF VACUUM BOTTOMS, OPTION 5

Figure 9.2

FIGURE 9.2

recycle stream (stream ROSE-XTR) is set to a constant and inconsequential flow rate of 1 lb/hr of water. A new in-line Fortran block, SETUP82, was added to the model to set the flow rates of the air, water and steam streams going to the fluid coking plant as a function of the main feed rate. Because this option is significantly different from the baseline design, changes were required in the input parameters for many plants. Naturally, some comments and descriptive material in the input file also have been changed to correctly describe this option.

Since this is a simulation of an optional nth plant case, the variables LOSBL and LPLANT in Fortran block SUMMARY both must be set to 1. When variable LOSBL is set to 1, the optional case OBSL costing logic is used. When variable LPLANT is set to 1, the nth plant OSBL and engineering costing logic is used.

Table 9.1 compares the ASPEN/SP process model simulation results with those of the detailed option 5 design. The ROM coal feed rate is overpredicted 602 tons/day or 2.6%. The natural gas rate is overpredicted by 0.7 MMM BTU/day or 1.2%. The worst hydrocarbon product prediction is that of the naphtha yield which is overpredicted by 217 bbl/day or 1.5%.

The number of operators and boardmen are underpredicted by 32 or 7.7% and the total installed capital is underpredicted by 33 MM$ or 1.0%. The reason for these two underpredictions is that the model predicts that the hydrogen requirement can be satisfied by four gasifier and air separation plant trains with reduced capacity rather than the five trains used in the engineering design.

When the model is forced to use five gasifier and air separation plant trains, there is a much better agreement with the engineering design. The mass and utility balances remain the same. The predicted number of operators and boardmen exactly matches the design value of 415. The total installed capital increases to 3311.5 MM$ which is only 3.5 MM$ or 0.1% lower than the estimated cost.

## Table 9.1

**Comparison of the ASPEN/SP Process Simulation Model with the Detailed Process Design for Option 5 -- Fluid Coking of Vacuum Bottoms**

| | Model | Design | Delta (M-D) | Percent Delta |
|---|---|---|---|---|
| ROM COAL FEED RATE, MTSD (dry) | 24.023 | 23.421 | 0.602 | 2.57 |
| COAL CLEANING REFUSE RATE, MTSD | 4.805 | 4.683 | 0.122 | 2.61 |
| ASH PRODUCTION RATE, MTSD | 2.327 | 2.215 | 0.112 | 5.06 |
| NATURAL GAS RATE, MMMBTU/SD | 61.962 | 62.664 | -0.702 | -1.12 |
| ELECTRICITY PURCHASE, MEGA-WH/SD | 0 | 0 | 0.000 | 0.00 |
| RAW WATER MAKE-UP, MMGSD | 15.023 | 14.646 | 0.377 | 2.57 |
| NAPHTHA PRODUCTION, MBSD | 15.228 | 15.011 | 0.217 | 1.45 |
| LT.DIST.PRODUCTION, MBSD | 5.908 | 5.904 | 0.004 | 0.07 |
| HVY.DIST. PRODUCTION, MBSD | 24.785 | 24.814 | -0.029 | -0.12 |
| GAS OIL PRODUCTION, MBSD | 3.275 | 3.207 | 0.068 | 2.12 |
| LIQUID PROPANE PRODUCTION, MBSD | 3.716 | 3.700 | 0.016 | 0.43 |
| MIXED BUTANES PRODUCTION, MBSD | 2.763 | 2.736 | 0.027 | 0.99 |
| AMMONIA PRODUCTION, MTSD | 0.206 | 0.211 | -0.005 | -2.28 |
| PHENOL PRODUCTION, MTSD | 0.029 | 0.035 | -0.006 | -17.14 |
| SULFUR PRODUCTION, MTSD | 0.606 | 0.597 | 0.009 | 1.47 |
| NUMBER OF OPERATORS/BOARDMEN | 383 | 415 | -32 | -7.71 |
| TOT.INSTALLED CAPITAL, $MM (E-YR) | 3274.945 | 3308.030 | -33.085 | -1.00 |
| Individual Plant Costs in MM$ | | | | |
| 1. Coal Cleaning | 136.952 | 134.8 | 2.2 | 1.60 |
| 1.4 Crushing and Drying | 147.383 | 147.3 | 0.1 | 0.06 |
| 2 Liquefaction | 1570.186 | 1570.1 | 0.1 | 0.01 |
| 3 Gas plant | 37.607 | 35.5 | 2.1 | 5.94 |
| 4 Naphtha Hydrotreater | 21.949 | 21.7 | 0.2 | 1.15 |
| 5 Gas Oil Hydrotreater | 104.116 | 104.0 | 0.1 | 0.11 |
| 6 H2 Recovery | 228.934 | 226.4 | 2.5 | 1.12 |
| 8.2 Fluid Coker | 271.339 | 271.3 | 0.0 | 0.01 |
| 9 H2 from Coal | 348.917 | 366.8 | -17.9 | -4.88 |
| 10 Air Separation | 260.573 | 277.8 | -17.2 | -6.20 |
| 11 Sulfur | 67.259 | 66.5 | 0.8 | 1.14 |
| 38 Ammonia Recovery | 59.201 | 63.7 | -4.5 | -7.06 |
| 39 Phenol Recovery | 20.529 | 22.1 | -1.6 | -7.11 |
| Total | 3274.945 | 3308.0 | -33.1 | -1.00 |

# 10. OPTION 6 -- STEAM REFORMING OF NATURAL GAS FOR HYDROGEN PRODUCTION PLUS AN FBC UNIT

In this option, the hydrogen production method is changed from coal gasification to steam reforming of natural gas (methane). The steam reforming process produces essentially pure hydrogen. Since there is no coal gasification plant, the ash concentrate stream from the ROSE-SR unit is sent to a Fluidized Bed Combustion (FBC) plant to generate high pressure steam which goes to steam turbines to generate electricity. Since this option does not have any coal gasification plants, no air separation plants are required. This case has been described in detail in Section 49 of the Task II Topical Report and is shown in Figure 10.1

## 10.1 Hydrogen Production by Steam Reforming of Natural Gas Plant, Plant 9.1

The hydrogen production by steam reforming of natural gas plant, reacts methane (natural gas) with steam over a catalyst to produce carbon monoxide and hydrogen. The carbon monoxide is further reacted with more water over another catalyst to produce carbon dioxide and more hydrogen. Any trace ethane and propane in the natural gas also react with steam to produce carbon dioxide and hydrogen. After the hydrogen has been purified, any carbon monoxide and carbon dioxide remaining in the hydrogen stream are converted back to methane.

```
                        -------------------------
                        |                       |
                        |       Plant 9.1       |
Natural Gas ---->       |  Hydrogen Production  |----> Hydrogen
                        |  by Steam Reforming   |
      Water ---->       |  of Natural Gas Plant |----> Flue Gas
                        |                       |
                        -------------------------
```

The Plant 9.1 Fortran user block model USR91 assumes that the natural gas stream is the first inlet stream and that the water (steam) stream is the second inlet stream. The hydrogen-rich product gas stream is the first outlet stream, and the flue gas is the second outlet stream.

The model assumes any ethane and propane in the natural gas feed are completely reformed to hydrogen and carbon dioxide. Some methane may not be completely reformed and converted to hydrogen and carbon dioxide. All unconverted methane leaves the plant in the hydrogen-rich product gas as the only other component present in that stream. All other conventional components leave the unit in the flue gas stream.

The Fortran user block model for Plant 9.1 requires four REAL parameters other than those described in Section 3. These parameters are:

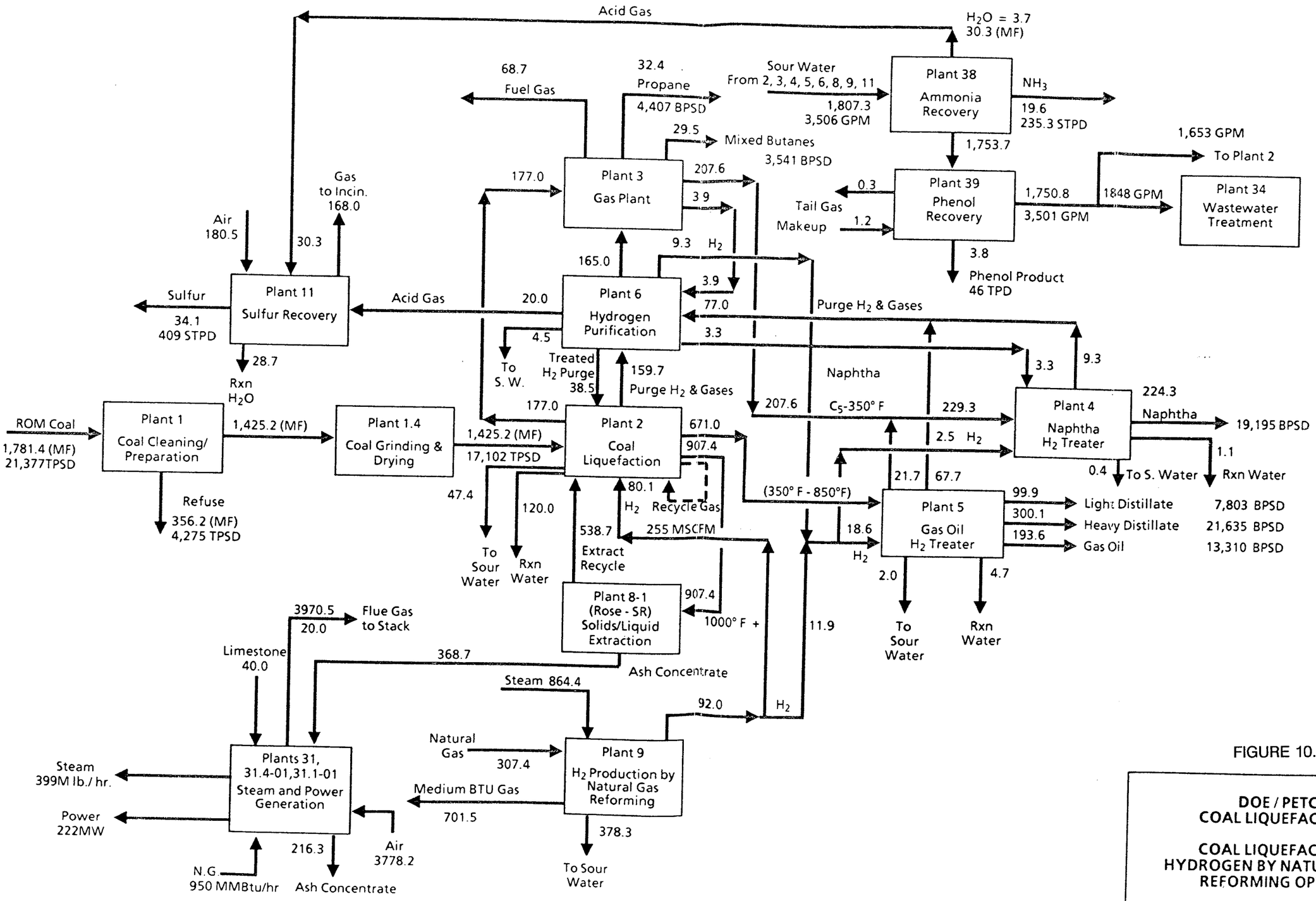


Revised 08/01/91

1091056-1

Notes:

1. Flow rates are in MLB/HR unless noted and on dry basis
2. Simplied water flow distribution diagram is shown on Figure 41.1
3. Minor streams including steam, water, sour water, and make-up amine are not shown on this diagram
4. Flow rates around plants #38, 39, 34 are shown on wet basis

FIGURE 10.1

**DOE / PETC**
**COAL LIQUEFACTION**

**COAL LIQUEFACTION**
**HYDROGEN BY NATURAL GAS**
**REFORMING OPTION**

**OVERALL PLANT CONFIGURATION**
**AND**
**OVERALL MATERIAL BALANCE**

| | | |
|---|---|---|
| REAL(1) | = | Fraction of $CH_4$ reacting to produce $H_2$ and $CO_2$. |
| REAL(2) | = | Fraction of $CH_4$ reacting to produce $H_2$ and CO. |
| REAL(3) | = | Fraction of hydrogen produced that leaves in the hydrogen-rich product gas stream. |
| REAL(4) | = | Percent hydrogen in the hydrogen-rich product gas, mole %. |

The Fortran user block model USR91 is designed to work in conjunction with a design-spec, RFMRFLO, and an in-line Fortran block, SETUP91. The design-spec varies the amount of natural gas to Plant 9.1 in order to produce the required amount of the hydrogen component in the hydrogen-rich product gas stream. Fortran block SETUP91 sets the flow rate of the inlet water stream as a function of the flow rate of the natural gas stream. This insures that sufficient water (steam) is available to completely reform all the natural gas entering the plant. Excess water leaves the hydrogen plant in the FLUE GAS stream.

## 10.2 Fluidized Bed Combustor and Steam Turbine Generator, Plants 31.1 and 31.4

Fortran user block model USRA6 is a very simplified model of Plants 31.1 and 31.4, the fluidized bed combustor and steam turbine generator. It is designed only to calculate the solids waste stream flow rate, $CaCO_3$ requirement, utilities consumptions (or productions), economic parameters, and maintain a mass balance. It is not designed to be a detailed simulation of the two plants.

Based on the flow rate and amount of ash in the feed stream, this user block model approximates the air requirement, $CaCO_3$ requirement and flue gas production rate through simple correlations. The user block model is designed to work in conjunction with a separator block that splits the model's single product stream into a pseudo flue gas stream and a solids stream for disposal.

```
                        ----------------------
                        |                    |
                        | Plants 31.1 & 31.4 |-----> Flue Gas
                        |                    |
Ash Concentrate ---->   |    FBC & Steam     |
                        |  Turbine Generator |-----> Solids
                        |                    |
                        ----------------------
```

The SA6 separator block distributes the components leaving the Fortran user block model by a solids production factor. All remaining material is placed in the pseudo flue gas stream. The single component distribution factor is set by the following option-specific REAL parameter in the input file:

| | | |
|---|---|---|
| REAL(1) | = | Solids production expressed as fraction of URCOAL in the feed ending up in the SOLIDS stream. |

The actual component separation is performed in the SEP block, SA6, which executes following the user Fortran block model. Another Fortran block (Fortran block SA6SET) is required in the input file to dynamically communicate the above REAL(1) parameter between the Fortran user block model USRA6 and the separation process in SEP block SA6. A nominal amount of T1000+ product is put in the MIXED substream portion of the SOLIDS stream to avoid some ASPEN/SP calculation problems.

## 10.3 Overall Process Simulation for Option 6

The ASPEN/SP block flow diagram for the process simulation model for this option is the same as that shown for the baseline design in Figure 3.2.

The ASPEN/SP input file for this case, OPT6.INP is given in Appendix K. The steam reforming of natural gas option, is activated from within the input file via Fortran block SETEM and splitter block S9. The base case hydrogen production by coal gasification method, Plants 9.0 and 10, is automatically deactivated when the Plant 9.1 option is chosen. The two-block approach for switching between the different hydrogen production methods uses efficient, feed-forward control and maintains the overall mass balance in the model.

To activate the Plant 9.1 option, the variable N9 in Fortran block SETEM is set to a value of 1. This automatically resets the inlet stream flow rates to Plants 9.0 and 10 to very small values, effectively shutting off the flow to these plants and the coal gasification option. The splitter block is then used to reset the Plant 9.0 hydrogen requirement rate, H9NEED, to a very small value to ensure that hydrogen only will be produced by the desired method (steam reforming of natural gas), and the model will be in mass balance.

Naturally, some comments and descriptive material in the input file also have been changed to correctly describe this option.

Since this is a simulation of an optional nth plant case, the variables LOSBL and LPLANT in Fortran block SUMMARY both must be set to 1. When variable LOSBL is set to 1, the optional case OSBL costing logic is used. When variable LPLANT is set to 1, the nth plant OSBL and engineering costing logic is used.

Table 10.1 compares the ASPEN/SP process model simulation results with those of the detailed option 6 design. This is the only case that produces more electric power than is consumed, and consequently, some electric is available for sale. The predictions agree very well with the detailed option 6 design. The hydrocarbon product yields are predicted very well with the worst prediction being the naphtha which is overpredicted by 13 bbl/day or 0.07%. The total installed capital is underpredicted by 11.0 MM$ or 0.4%. The number of operators in the fluidized bed combustor and steam turbine plants was set to 20 to match the detailed design number of operators. This option has significantly less operators than the baseline design because of the removal of the manpower intensive gasifier plants.

The above difference in the capital cost prediction mainly is in the cost of Plant 1, the coal cleaning plant. The engineering design is based on a five train coal cleaning plant and a four train sulfur recovery plant with reduced capacity. However, the model predicts that a four train coal cleaning plant and a three train sulfur recovery plant are sufficient. If the model is forced to use a five train coal cleaning plant and a four train sulfur recovery plant, the predicted capital cost is 2785.5 MM$ which is in good agreement with the engineering design value of 2782.7 MM$. The 18 fewer operators predicted by the model is a direct result of the fewer coal cleaning and sulfur plants. The number of operators will agree with the design value when the number of coal cleaning and sulfur plants are adjusted to match the design values.

## Table 10.1

**Comparison of the ASPEN/SP Process Simulation Model with the Detailed Process Design for Option 6 -- Steam Reforming of Natural Gas for Hydrogen Production plus an FBC Unit**

| | Model | Design | Delta (M-D) | Percent Delta |
|---|---|---|---|---|
| ROM COAL FEED RATE, MTSD (dry) | 21.378 | 21.377 | 0.001 | 0.00 |
| COAL CLEANING REFUSE RATE, MTSD | 4.275 | 4.275 | 0.000 | 0.00 |
| ASH PRODUCTION RATE, MTSD | 2.596 | 2.595 | 0.001 | 0.04 |
| NATURAL GAS RATE, MMMBTU/SD | 245.953 | 248.078 | -2.125 | -0.86 |
| ELECTRICITY PURCHASE, MEGA-WH/SD | -518.961 | -519.48 | 0.519 | -0.10 |
| RAW WATER MAKE-UP, MMGSD | 23.916 | 23.916 | 0.000 | 0.00 |
| NAPHTHA PRODUCTION, MBSD | 19.208 | 19.195 | 0.013 | 0.07 |
| LT.DIST.PRODUCTION, MBSD | 7.809 | 7.803 | 0.006 | 0.08 |
| HVY.DIST. PRODUCTION, MBSD | 21.648 | 21.635 | 0.013 | 0.06 |
| GAS OIL PRODUCTION, MBSD | 13.319 | 13.310 | 0.009 | 0.07 |
| LIQUID PROPANE PRODUCTION, MBSD | 4.411 | 4.407 | 0.004 | 0.09 |
| MIXED BUTANES PRODUCTION, MBSD | 3.544 | 3.541 | 0.003 | 0.08 |
| AMMONIA PRODUCTION, MTSD | 0.236 | 0.235 | 0.001 | 0.43 |
| PHENOL PRODUCTION, MTSD | 0.045 | 0.046 | -0.001 | -1.32 |
| SULFUR PRODUCTION, MTSD | 0.409 | 0.409 | 0.000 | 0.00 |
| NUMBER OF OPERATORS/BOARDMEN | 290 | 308 | -18 | -5.84 |
| TOT.INSTALLED CAPITAL, $MM (E-YR) | 2771.728 | 2782.755 | -11.027 | -0.40 |
| Installed Plant Costs in MM$ | | | | |
| 1. Coal Cleaning | 113.913 | 124.6 | -10.7 | -8.58 |
| 1.4 Crushing and Drying | 143.843 | 143.8 | 0.0 | 0.03 |
| 2 Liquefaction | 1532.463 | 1532.2 | 0.3 | 0.02 |
| 3 Gas plant | 41.583 | 41.5 | 0.1 | 0.20 |
| 4 Naphtha Hydrotreater | 25.653 | 25.6 | 0.1 | 0.21 |
| 5 Gas Oil Hydrotreater | 121.714 | 121.6 | 0.1 | 0.09 |
| 6 H2 Recovery | 250.904 | 250.5 | 0.4 | 0.16 |
| 8 ROSE-SR | 69.396 | 69.4 | 0.0 | -0.01 |
| 9.1 H2 from Natural Gas | 333.998 | 335.9 | -1.9 | -0.57 |
| 11 Sulfur | 45.306 | 48.2 | -2.9 | -6.00 |
| 38 Ammonia Recovery | 64.203 | 62.3 | 1.9 | 3.05 |
| 39 Phenol Recovery | 28.752 | 27.1 | 1.7 | 6.10 |
| Total | 2771.728 | 2782.7 | -11.0 | -0.39 |

# 11. OPTION 7 -- ADDITION OF A NAPHTHA REFORMER

In this option, the naphtha product leaving Plant 4, the naphtha hydrotreater, goes to a naphtha reformer to produce a 95 RON octane gasoline blending component, hydrogen and light gases. The naphtha reformer that was selected for this option is the Continuous Catalyst Regeneration (CCR) reforming process licensed by the UOP Process Division. This case has been described in detail in section 50 of the Task II Topical Report and is shown in Figure 11.1.

The Fortran user block model of the naphtha reformer is a very simplistic model. It has only one input stream, the hydrotreated naphtha feed stream, and generates three product stream; a hydrogen-rich gas stream, a light hydrocarbon gas stream, and the reformate product stream. Because of proprietary considerations, the reformate product is treated as a single component, and no attempt was made to elementally balance the reformer Fortran user block model.

```
                    ----------------------
                    |       Plant 7        | ---> Hydrogen Rich Gas
                    |                      |
Naphtha Feed---->   |  Naphtha Reformer    | ---> Light Gases
                    |        Plant         |
                    |                      | ---> Reformate Product
                    ----------------------
```

The Fortran user block model for the naphtha reformer requires no additional INTEGER or REAL input parameters other than those previously discussed in Section 3.

The ASPEN/SP block flow diagram for the process simulation model for this option is the same as that shown for the baseline design in Figure 3.2.

The ASPEN/SP input file for this case, OPT7.INP is given in Appendix L. The major change to this input file from that of the baseline design is in splitter block S7 which directs the hydrotreated naphtha either to the naphtha reformer or to product. This option is activated by making the line

FRAC 7-NAPH 1.0

the active line by removing the semicolon (;) from the fist column and putting a semicolon in the first column of the following line

FRAC PNAPHTHA 1.0

Naturally, some comments and descriptive material in the input file also have been changed to correctly describe this option.

Since this is a simulation of an optional nth plant case, the variables LOSBL and LPLANT in Fortran block SUMMARY both must be set to 1. When variable LOSBL is set to 1, the optional case OSBL costing logic is used. When variable LPLANT is set to 1, the nth plant OSBL and engineering costing logic is used.

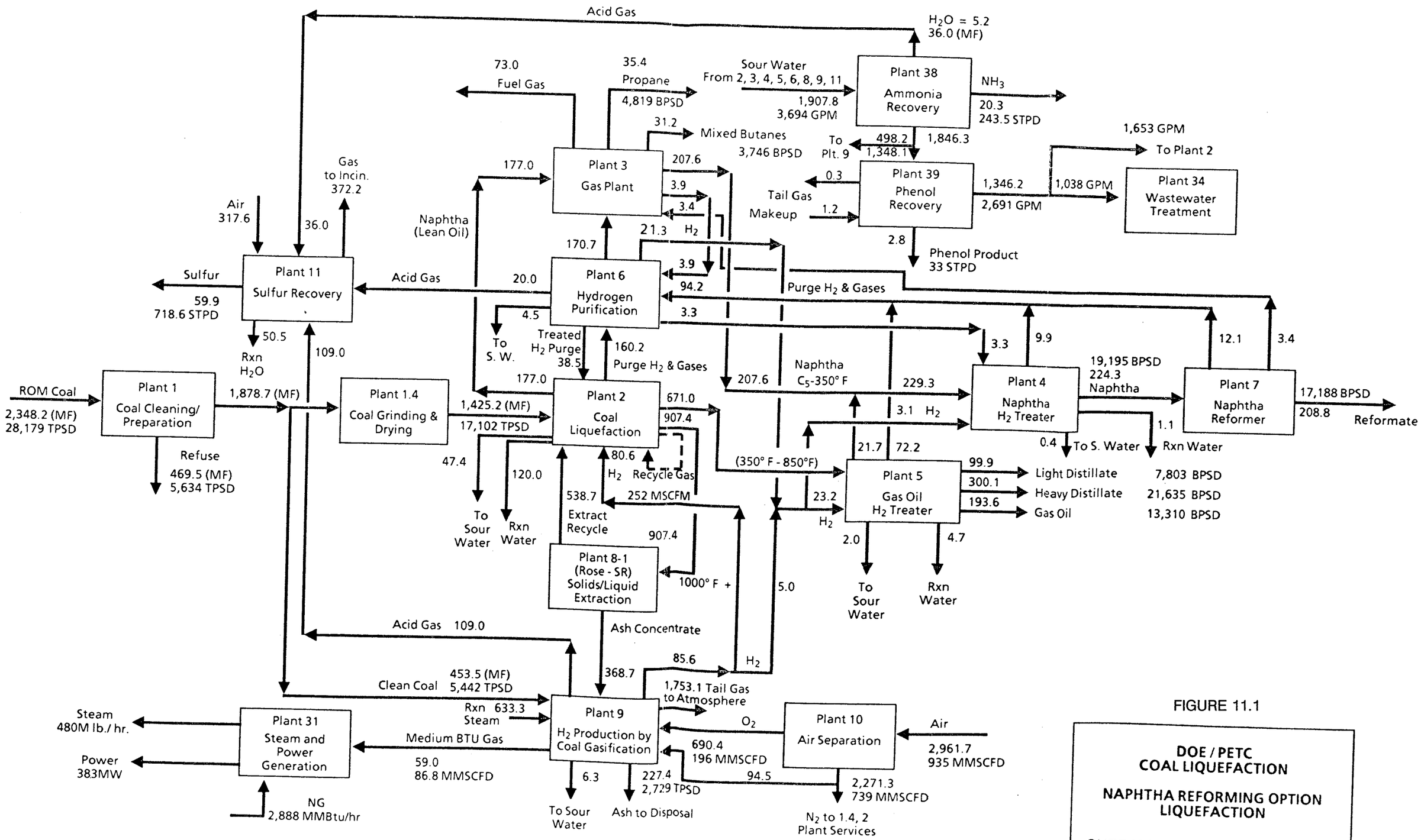


FIGURE 11.1

**DOE / PETC**
**COAL LIQUEFACTION**

**NAPHTHA REFORMING OPTION**
**LIQUEFACTION**

**OVERALL PLANT CONFIGURATION**
**AND**
**OVERALL MATERIAL BALANCE**

Revised 11/26/91

1291048-2

Notes:

1. Flow rates are in MLB/HR unless noted and on dry basis
2. Simplied water flow distribution diagram is shown on Figure 41.1
3. Minor streams including steam, water, sour water, and make-up amine are not shown on this diagram
4. Flow rates around plants #38, 39, 34 are shown on wet basis

Table 11.1 compares the ASPEN/SP process model simulation results with those of the detailed option 7 design. The predictions agree very well with the detailed option 7 design. The hydrocarbon product yields are predicted very well with the worst prediction being the heavy distillate which is overpredicted by 13 bbl/day or 0.06%. The total installed capital is overpredicted by 6.3 MM$ or 0.19%.

## Table 11.1

**Comparison of the ASPEN/SP Process Simulation Model with the Detailed Process Design for Option 7 -- Addition of a Naphtha Reformer**

| | Model | Design | Delta (M-D) | Percent Delta |
|---|---|---|---|---|
| ROM COAL FEED RATE, MTSD (dry) | 28.257 | 28.179 | 0.078 | 0.28 |
| COAL CLEANING REFUSE RATE, MTSD | 5.651 | 5.634 | 0.017 | 0.30 |
| ASH PRODUCTION RATE, MTSD | 2.737 | 2.729 | 0.008 | 0.29 |
| NATURAL GAS RATE, MMMBTU/SD | 90.787 | 89.809 | 0.978 | 1.09 |
| ELECTRICITY PURCHASE, MEGA-WH/SD | 0 | 0 | 0.000 | 0.00 |
| RAW WATER MAKE-UP, MMGSD | 16.875 | 16.860 | 0.015 | 0.09 |
| NAPHTHA PRODUCTION, MBSD | 17.199 | 17.188 | 0.011 | 0.06 |
| LT.DIST.PRODUCTION, MBSD | 7.809 | 7.803 | 0.006 | 0.08 |
| HVY.DIST. PRODUCTION, MBSD | 21.648 | 21.635 | 0.013 | 0.06 |
| GAS OIL PRODUCTION, MBSD | 13.319 | 13.310 | 0.009 | 0.07 |
| LIQUID PROPANE PRODUCTION, MBSD | 4.821 | 4.819 | 0.002 | 0.04 |
| MIXED BUTANES PRODUCTION, MBSD | 3.756 | 3.746 | 0.010 | 0.27 |
| AMMONIA PRODUCTION, MTSD | 0.244 | 0.244 | 0.000 | 0.00 |
| PHENOL PRODUCTION, MTSD | 0.032 | 0.033 | -0.001 | -3.03 |
| SULFUR PRODUCTION, MTSD | 0.721 | 0.719 | 0.002 | 0.28 |
| NUMBER OF OPERATORS/BOARDMEN | 426 | 426 | 0 | 0.00 |
| TOT.INSTALLED CAPITAL, $MM (E-YR) | 3339.515 | 3345.800 | -6.285 | -0.19 |
| Installed Plant Costs in MM$ | | | | |
| 1. Coal Cleaning | 150.821 | 150.5 | 0.3 | 0.21 |
| 1.4 Crushing and Drying | 147.383 | 147.3 | 0.1 | 0.06 |
| 2 Liquefaction | 1570.186 | 1570.1 | 0.1 | 0.01 |
| 3 Gas plant | 46.573 | 43.4 | 3.2 | 7.31 |
| 4 Naphtha Hydrotreater | 26.283 | 26.3 | 0.0 | -0.06 |
| 5 Gas Oil Hydrotreater | 124.712 | 124.6 | 0.1 | 0.09 |
| 6 H2 Recovery | 257.081 | 272.1 | -15.0 | -5.52 |
| 7 Naphtha Reformer | 51.736 | 51.7 | 0.0 | 0.07 |
| 8 ROSE-SR | 71.105 | 71.1 | 0.0 | 0.01 |
| 9 H2 from Coal | 420.858 | 418.4 | 2.5 | 0.59 |
| 10 Air Separation | 305.773 | 304.5 | 1.3 | 0.42 |
| 11 Sulfur | 77.044 | 76.8 | 0.2 | 0.32 |
| 38 Ammonia Recovery | 67.500 | 66.6 | 0.9 | 1.35 |
| 39 Phenol Recovery | 22.459 | 22.4 | 0.1 | 0.26 |
| Total | 3339.514 | 3345.8 | -6.3 | -0.19 |

# 12. THE COAL LIQUEFACTION KINETIC REACTOR MODEL

## 12.1 Overview

The kinetic-based reactor model predicts product yields and reactor sizes for the baseline design. Wilsonville Run 257-E results provided the basis for the model, for Illinois No. 6 bituminous coal liquefied in the two-stage Catalytic/Catalytic mode, using AMOCAT™-1C catalyst in each stage. Because no interstage separator was used in Run 257-E, first-stage liquid yields were estimated from earlier Wilsonville runs.

Resid conversion in each ebulated-bed reactor is modelled by first-order reaction rate expressions for a continuous stirred reactor (CSTR). The model accounts for the effects of resid recycle on conversion in each reactor, of thermal and catalytic reaction rates, of catalyst addition rates, and of recycle solvent boiling point compositions. The model also predicts liquid and gas yields, hydrogen consumption, and computes the overall elemental balances for each reactor. However, the capability for rigorous product quality predictions is significantly limited by lack of data from Wilsonville.

The model is also used to size the ebulated-bed reactors. This design capability includes detailed calculations for bed hydrodynamics, heat balances, reactor weight, and hydrogen partial pressure. This allows the determination of the number of reactor trains necessary for given coal processing requirements.

The model can thus be used as a research guidance tool for run planning, for economic evaluations of bituminous coal liquefaction processes, and with modifications, for studies of coal reactivity and catalysts.

Areas for future improvements include fine-tuning the model's liquid yield/quality predictions (e.g, based on Wilsonville Run 261 which used an interstage separator), accounting for the effects of hydrogen partial pressure on resid conversion and product yields/quality, and more rigorous coal conversion kinetics. The model might also be modified to handle the liquefaction of low rank coals, and the use of dispersed catalysts.

## 12.2 Introduction

The baseline design study primarily focuses on the development of a base case design and cost estimates for a conceptual commercial plant for direct liquefaction of Illinois No. 6 bituminous coal. The base case technology is the Catalytic/Catalytic (C/C) two-stage process developed at the Wilsonville pilot plant. In this process, coal is liquefied in the presence of hydrogen and a hydrogen-donor solvent using two close-coupled ebulated-bed reactors filled with supported Ni/Mo hydrocracking catalyst. Similar to other technologies for conversion of petroleum resid, these ebulated-bed reactors facilitate coal plus resid conversion to 1000-°F liquids.

A kinetic model has been developed to predict resid conversion, including key product yields and hydrogen consumption, in each stage of the two-stage catalytic/catalytic process. The calculations are performed for a given set of key operating conditions such as reactor temperature, coal space velocity, resid recycle rate, and catalyst addition rates. The model has been extended to estimate key reactor design parameters such as diameter and height, hydrogen partial pressure, ebulated-bed hydrodynamics, and heat balances. The key objective is to use the model as a research guidance tool for run planning and economic evaluations, including optimization of catalyst formulations and operating conditions.

In its current form, the model is designed to predict yields for Illinois No. 6 coal using AMOCAT™-1C catalyst in each stage. Depending on the availability of experimental data at operating conditions similar to those used in this study, the key model parameters can be modified to suit other bituminous coals and other supported catalysts.

## 12.3 Overall Methodology

The key calculation steps for the kinetic model are shown in Figure 12.1. In this model, initial guesses are needed for the flow rates and compositions of both the treated and untreated recycle gas streams to each ebulated bed reactor.

The key objectives of the model are (1) to estimate the steady-state catalyst addition rate and other reactor operating in conditions in each reactor for a specific resid conversion, and (2) to calculate the ebulated bed internal recycle rate in each reactor for achieving the desired bed expansion (assumed in the baseline design to be a 77 foot bed height). As shown in Figure 12.1, the calculation steps are.

- Provide design inputs such as the coal rate, reactor temperatures, coal SV, reactor diameter, stage I resid conversion, recycle gas rates (treated as well as untreated) to each reactor, etc. The number of reactor trains and the overall coal conversion also are inputs to the program. For Illinois No. 6 coal, the overall coal conversion is typically 88 to 93 wt% MAF coal.

- The reactor weight is calculated in the program; the key inputs are reactor diameter and refractory thickness, pressure, temperature, coal SV (lb coal/hr/lb catalyst), expanded bed density (e. g.; about 20 lb/ft$^3$ as specified by HRI in the baseline design), and reactor free-board height (8 feet in the baseline design).

- From the model output, check the reactor weight. If it is more than 1,200 MTons, change the design parameters such as the coal SV (if the model is being used for run planning) or the number of trains (for case studies with conceptual commercial designs).

- If the reactor weight is about 1,200 MTons, check the hydrogen partial pressure at the outlet of the second-stage reactor. This will require detailed estimates for the liquid and gas flow rates in each stage (as explained below).

Figure 12.1

C/C TWO-STAGE COAL LIQUEFACTION: KINETIC MODEL

Coal: Illinois No. 6 Coal, Catalyst: Amocat-1C (Each Reactor)

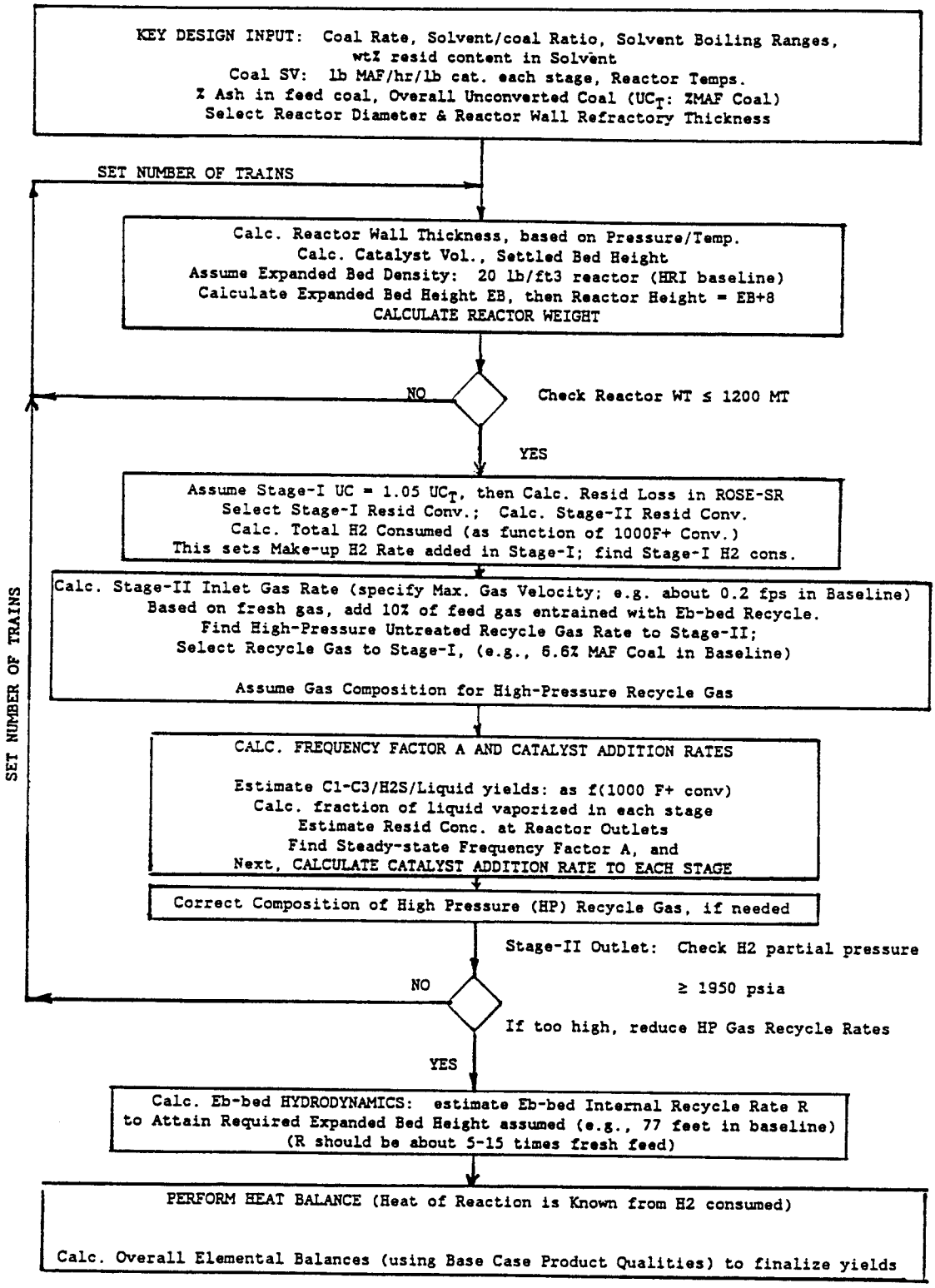

- From the coal conversion and ash content of the feed coal (design inputs), the program calculates the "resid plus distillate loss: L" in the ROSE-SR ash-concentrate stream. Based on the overall coal conversion (an input number) and L (program output), the program calculates the overall 1000+°F conversion and overall hydrogen consumption (namely, the make-up hydrogen rate, which is a function of the 1000+°F conversion). Based on the first stage resid conversion (a program input), the program calculates the first stage 1000+°F conversion and hydrogen consumption. From the supplied recycle gas rates and compositions (treated as well as untreated), the total gas flow rates to each stage are calculated.

  From the program output, the gas velocities in each reactor should be checked to confirm that they are less than about 0.25 ft/sec. For the baseline design, HRI used a gas velocity of about 0.20 ft/sec in the second stage.

- Based on correlations with 1000+°F coal conversion, the program calculates the gas and liquid yields (as well as wt % MAF coal) in each stage. Using the solvent recycle rate and composition as program inputs, the program calculates the liquid flow rates to each stage. Next, using vapor liquid equilibrium data contained in the model and the component flow rates, the program estimates the resid concentration at the outlet of each reactor. Next, using the correlations explained in the following section, the program calculates the frequency factor A, and subsequently, the required catalyst addition rates to each reactor.

- The program calculates the hydrogen partial pressure at the stage II outlet. Based on the design criteria used by HRI for the baseline design, the hydrogen partial pressure should be greater than 1950 psia. If it is significantly lower than 1950 psia, the gas recycle rates and distribution to each stage (program inputs) should be changed. This may require a change in the number of reactor trains if the gas velocities in each stage are too high (for example, more than 0.2 ft/sec).

  If hydrogen partial pressure is much higher than 1950 psia, the gas recycle rates should be reduced.

- Based on various ebulated bed fluid dynamic correlations (explained in section 12.8) the program calculates the ebulated bed internal recycle rate (for each stage) to achieve the desired be expansion assumed in the design (as explained above). In the baseline design, the expanded bed height is 77 feet. For these calculations, the key program inputs are the catalyst properties (e. g.; diameter, length, spherical equivalent diameter, density and coke deposition) and the gas and liquid properties at the reactor conditions. Typically, the ratio of recycle rate/fresh liquid feed rate should be about 5-15.

- Next, the program establishes a heat balance for each stage based on the hydrogen consumption (calculated by the program), required average catalyst bed temperature (a program input), reactor flow rates (calculated by the program), and the ebulated bed internal recycle rate (calculated by the program). The program calculates the required inlet temperature of the fresh feed (gas plus liquid mixture)

and the bed exotherm. Typically, the bed exotherm should be within the 15 to 40°F range.

- Calculate overall elemental balances for each stage using product quality data from the base line design. Make minor adjustments in yields of $C_1$-$C_3$ gas make, water, or ash concentrate streams to achieve elemental balances.

## 12.4 Resid Conversion Kinetics

It is assumed that the volatile matter (VM) in coal converts to 1000-°F gas and liquid prior to the first stage of a two-stage catalytic/catalytic process, i.e., VM conversion to 1000-°F products is much faster than resid conversion.

X = total fixed carbon converted, lb/hr

= fixed carbon in feed coal, lb/hr

- unconverted coal at Stage II outlet, lb/hr

∴ Total resid converted, % of fixed carbon converted =

$$\frac{X - M \bullet 0.01 \bullet \gamma}{X} (100)$$

where $\gamma$ = (resid loss in "ROSE-SR ash concentrate") + net solids-free resid make, % MAF coal; and M = MAF coal rate, lb/hr.

The resid (1000+°F) conversion in each reactor is modelled based on a CSTR first-order reaction. The key steps for resid conversion are:

For resid conversion, with the reaction rate $r_R$:

$$r_R = K' resid^{\alpha}_{conc} \bullet H_2^{\beta}{}_{conc} \qquad \text{(Eq. 12.1)}$$

At constant $H_2$ partial pressure,

$$r_R = K \bullet resid^{\alpha}_{conc} \qquad \text{(Eq. 12.2)}$$

where K = rate constant, and $\alpha$ = reaction order.

From Arrhenius equation:

$$K = A \bullet e^{-\Delta E/RT} \qquad \text{(Eq. 12.3)}$$

where A = frequency factor, $\Delta E$ = activation energy, R = gas constant, and T = reaction temperature.

For a continuous stirred-tank reactor operation:

$$r_R = X_{resid} \bullet (WHSV)_R \qquad \text{(Eq. 12.4)}$$

where $X_{resid}$ = fraction of resid converted, and $(WHSV)_R$ = inlet flow of resid per lb catalyst per hour.

From equations 12.2 and 12.4,

$$K \bullet resid^{\alpha}_{conc} = X_{resid} \bullet (WHSV)_R$$

$$K = \frac{X_{resid}(WHSV)_R}{Resid^{\alpha}_{conc}} \qquad \text{(Eq. 12.5)}$$

From equation 12.3,

$$A = \frac{X_{resid}(WHSV)_R}{resid^{\alpha}_{conc}} \bullet e^{\Delta E/RT} \qquad \text{(Eq. 12.6)}$$

The frequency factor "A" is unique to the liquefaction process and is dependent on types of coal, type of catalyst(s), and catalyst age. It is independent of temperature, space velocity, solvent recycle ratio, and product yields. Based on experimental data for a given catalyst and a coal, "A" can be determined as a function of catalyst age. In these calculations, average resid concentration in the reactor is determined from the extent of liquid vaporization at average reactor temperature.

The reaction order, $\alpha$, is assumed to be 1.

## 12.5 Catalyst Addition/Withdrawal Requirements

For a well-mixed ebulated-bed reactor, the steady-state frequency factor A' can be expressed as

$$A' = \int_0^{\infty} P \bullet A \bullet dT$$

where P = fraction of catalyst of age T, and T = catalyst age.
P can be expressed as

$$P = r \bullet e^{(-r \cdot T)}$$

where r is the steady-state catalyst addition/withdrawal rate. Thus,

$$A' = M \bullet r/(N + r) \qquad \text{(Eq. 12.7)}$$

where A is given by:

$$A = M \bullet (e^{-N \cdot T}) \qquad \text{(Eq. 12.8)}$$

and M and N are constants,

then r is estimated by:

$$r = N \bullet A'/(M - A') \qquad \text{(Eq. 12.9)}$$

Based on batch or steady-state experimental data, M and N can be determined for a given catalyst and a coal.

(Reference: Anderson, S. L., et al., *Ind. and Eng. Chem. 46*, No. 6, 1954)

Wilsonville data on catalyst deactivation (with no catalyst replacement) have shown that, frequency factor "A" and catalyst age "T" can be best fitted by the equation 12.8, by a semilog-type of correlation.

In the current model, steady-state catalyst addition rate (r) in each reactor is predicted for given operating conditions and required resid conversion in each stage. In this mode, K, the rate constant for resid conversion via catalytic reactions, is first estimated from equation 12.5. Next, frequency factor A is calculated from K, reactor temperature, and activation energy (typically, 40,000 Btu/lb-mole) from equation 12.6. The steady-state catalyst addition rate, r, is then estimated from equation 12.9.

In some cases, if the calculated A' is greater than M, r can be a negative number. Therefore, the current model can be modified to a form in which the catalyst addition rate can be a design input based on cost limitations (say, 0.5 to 3 lb catalyst/ton of dry coal). In that case, one can predict other design parameters (for example, resid conversion, or coal space velocity based on catalyst weight).

## 12.6 Extent of Thermal Reactions

Conversion of coal-derived resid is dependent on both thermal and catalytic processes. As shown in the equations below, the resid conversion from thermal reactions in each reactor stage of the C/C liquefaction process can be expressed as:

$$K_{ther} = (WHSV) \bullet X_T/(1 - X_T) \qquad \text{(Eq. 12.10)}$$

where $K_{ther}$ = rate constant for resid conversion from thermal reactions, WHSV = total liquid feed space velocity, lb feed/hr/lb catalyst, and $X_T$ = fraction of 1,000°F+ converted due to thermal reactions.

Based on Wilsonville results from Run 250 (operated in the thermal/catalytic mode):

$$K_{ther} = 0.58 \text{ at } 805°F \qquad \text{(Ref. Wilsonville report for Run 257)}$$

$$= K_o\, e^{-\Delta E/RT} \quad (\Delta E = 94{,}000 \text{ Btu/lb-mole})$$

(Ref. H. Schindler, Report for Wilsonville Run 257)

This provides a correlation for estimating $K_o$ and, subsequently, $X_T$ for given temperature and WHSV (using equation 12.10).

Wilsonville data typically indicate 1,000°F+ conversion from thermal reactions to be about 15-30 wt% of feed 1000+°F content. This agrees well with the coal extract

hydroprocessing data obtained by Chillingworth et al. (DOE Report DE84004864, DOE/ET/14804-Q10, Vol. 2, 1983).

## 12.7 Heat Balance Around Ebulated-Bed Reactor

The overall energy balance for each ebulated-bed reactor is illustrated in Figure 12.2.

For specific inlet flow rates, average bed temperature ($T_{avg}$), and other operating conditions, one can calculate the bed exotherm ($T_{out}$ - $T_{in}$) and fresh feed temperature (of liquid plus gas mixture), $T_{prh}$. The heat of reaction is assumed to be 11,000 Btu/lb of hydrogen consumed (based on SRC-II coal liquefaction data).

## 12.8 Reactor Fluid Dynamics

For the baseline design, the fluid dynamics for the ebulated-bed reactors are calculated to ensure proper bed expansion at prevailing temperature, pressure, and liquid plus gas flow rates. The internal ebulated bed recycle rate is estimated to expand the catalyst bed to 77 feet high. The height of each reactor is 85 feet, including 8 feet of freeboard height. The fluid dynamics calculations include detailed phase equilibria calculations at the reactor inlet.

A detailed explanation of the procedure used by the model to perform the fluid dynamics calculations for the ebulated-bed reactor has been described in the book by Fan and numerous other workers. Table 12.~~2~~1 lists these references.

Most physical property information is supplied as input data, both for the catalyst particles and liquid (densities, viscosities, etc.). These supplied values and the appropriate fluid dynamics correlations are used to calculate properties of the ebulated catalyst bed (expansion, density, etc.).

The properties of the ebulated catalyst bed are a function of the catalyst particle properties as well as the gas and liquid properties and flow rates. The actual (observed) catalyst particle density must be modified for the presence of deposited metals and coke in the catalyst pores when calculating the soaked particle density. Since most catalyst particles are not spherical, but are cylindrical in shape, an equivalent particle spherical diameter and a particle sphericity factor are used to characterize the specific catalyst particles in the reactors. The equivalent spherical diameter is defined as the diameter of a sphere which has the same volume as the particle of interest. The particle sphericity factor is defined as the ratio of the surface area of a sphere having the same volume as the particle to the surface area of the particle.

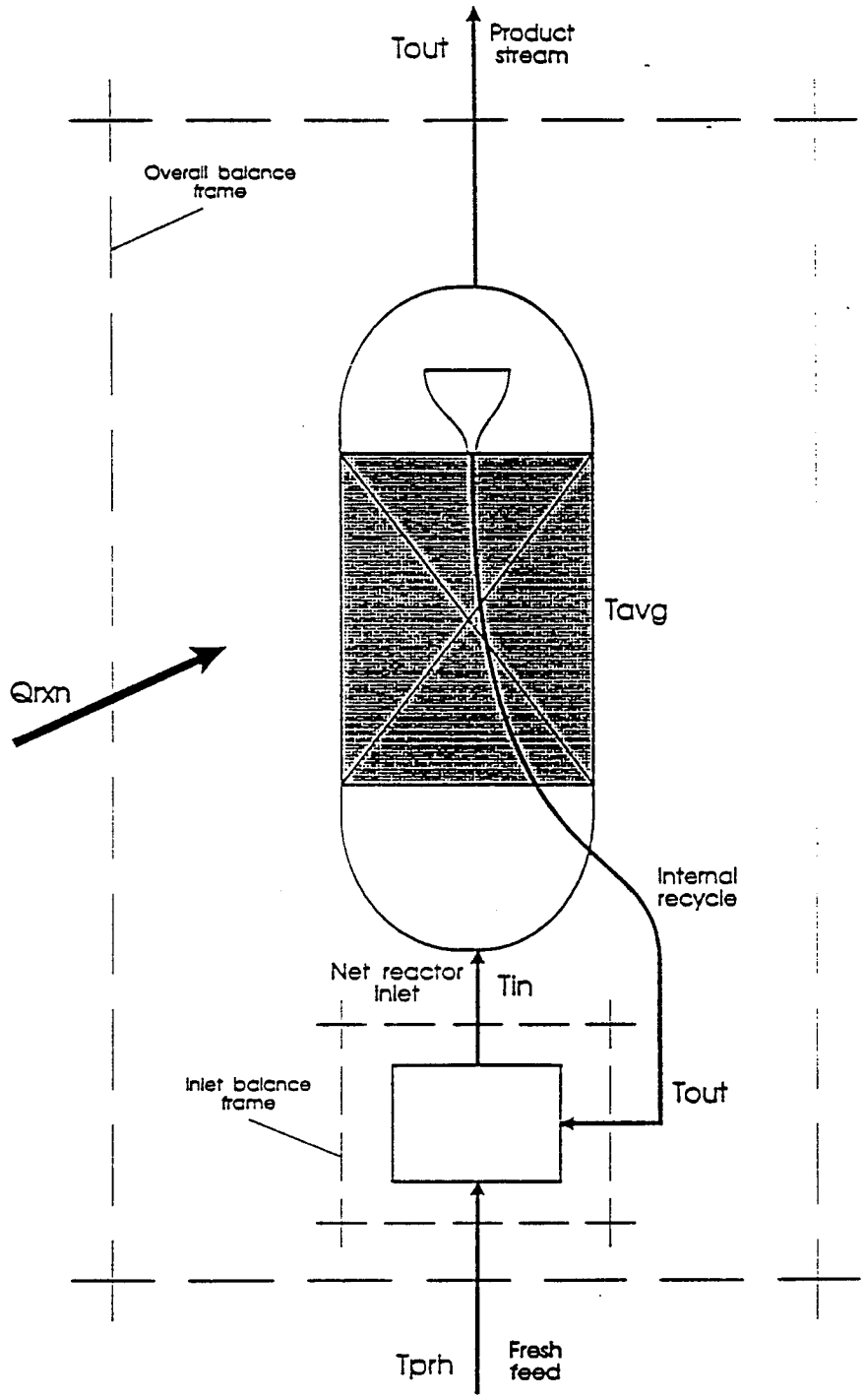


Figure 12.2: REACTOR ENERGY BALANCES

Liquid Flow Calculations -- The total liquid entering the reactor bed comes from the fresh feed and the internal recycle. The amount of liquid fresh feed entering the reactor was calculated simultaneously with the gas feed when the fresh feed was flashed at the reactor inlet conditions. The internal recycle is assumed to be a multiple of the fresh liquid feed rate.

For ease of understanding, the following discussion describes, in general, how the reactor fluid dynamics calculations would be made to calculate the expanded bed volume given all feed and recycle flow rates and the reactor diameter. In the model, this procedure is modified so that the internal recycle rate is calculated with an iteration procedure based on an assumed constant recycle to fresh feed ratio. Additionally, the model does the following calculations in a slightly different order to calculate the liquid recycle rate that is required to obtain the target reactor height.

1. Set the recycle to fresh feed ratio, and calculate the internal recycle rate.

2. Convert the liquid flow rate from a mass to a volumetric basis.

3. Calculate the total liquid superficial velocity.

4. Calculate the bed porosity based on the liquid flow without gas using the above calculated liquid superficial velocity.

5. Calculate the increase in bed porosity caused by the gas flow in conjunction with the above liquid flow.

6. Calculate the expanded bed density on a catalyst weight basis.

7. Calculate the expanded bed volume using the previously calculated catalyst mass per train.

8. Calculate the expanded bed height by dividing by the reactor cross sectional area.

9. Finally, calculate the actual reactor height by adding 8 feet to account for the free space at the reactor top and bottom.

## Table 12.~~2~~ 1

## Fluid Dynamics References


Begovich, J. M., and J. S. Watson, "Hydrodynamic Characteristics of Three Phase Fluidized Beds"; *Fluidisation*, Cambridge University Press, 1978, pp 184-189.

Fan, L. S., "Gas-Liquid-Solid Fluidization Engineering", Butterworths, Boston, 1989.

Jean, R. H. and L. S. Fan, "A Simple Correlation for Solids Holdup in Gas-Liquid-Solid Fluidized Bed"; Chem. Eng. Science, Vol. 41 (1986), No. 11, pp 2823-2828.

Limas-Ballasteros, R., J. F. Ribs, and J. F. Gourdert, "Expansion de Couches de Particules non Spheriques Fluidisees par un Liquide"; *Entropie 106*(1982), pp 37-45.

Richardson, J. F. and W. N. Zaki, "Sedimentation and Fluidization: Part I"; Trans. Inst. Chem. Engrs., Vol 32 (1954), pp 35-53.

Song, W. Y., "Bed Expansion in Three-Phase Fluidization"; Ind. Eng. Chem. Process Des. Dev., Vol. 17, (1978), pp 33-36.

Wen, C. Y. and Y. H. Yu, "Mechanics of Fluidization", Chem. Eng. Prog. Symposium Series, Vol 62 (1966), No. 62, pp 100-111.

Wild, G., M. Saberian, J. L. Schwartz, and J. C. Charpentier, "Les Reacteurs a Lits Fluidises Gaz-Liquid-Solide. Etat de l'Art et Perspectives Industrielles"; *Entropie 106*(1982), pp 3-36.

## 12.9 Results

For the baseline design, Table 12.~~3~~2 shows the key reactor parameters predicted by the model. These data are summarized in the model output report files DCL2R.REP and DCL2R_M7.REP.

**Table 12.~~3~~2**

**KINETIC MODEL: KEY RESULTS FOR BASE LINE DESIGN***

| Reactor | I | II |
|---|---|---|
| ID (excluding refractory), ft | 15 | 15 |
| Refractory Thickness, in. | 6 | 6 |
| Weight, Short Tons | 1295 | 1295 |
| Gas Velocity, fps | 0.107 | 0.212 |
| Total Liquid Velocity, fps | 0.104 | 0.084 |
| Bed Height, ft: | | |
| Settled | 43.6 | 43.6 |
| Expanded | 77.0 | 77.0 |
| Recycle/Fresh Feed Ratio | 6.1 | 3.3 |
| Reactor Average Temp, °F | 790 | 760 |
| Bed Exotherm, °F | 30 | 27 |

*Total coal rate: 15,140 ton/day MAF, number of reactor trains: 5
Catalyst: average diameter, 0.083 inches, length, 0.240 inches, and equivalent spherical diameter, 0.135 inches.

As previous explained, the key objectives of the model are (1) to estimate the steady-state catalyst addition rate and other reactor operating conditions in each reactor for a specific resid conversion, and (2) to calculate ebulated bed internal recycle rate in each reactor for achieving the desired bed expansion (assumed to be 77 feet in the baseline design).

In the baseline design, the resid yield in stage I is 26.8 wt% MAF coal. Based on the overall coal conversion and coal ash content (input values), the program calculates the organic loss in the ROSE-SR unit ash concentrate stream, and thereby establishes the required resid conversion in stage II. The key calculations steps and program inputs are explained in section 12.3. Some of the important program inputs are: coal feed rate per train (there are 5 operating trains), coal analyses (% ash, % Volatile Matter, Fixed Carbon), average reactor temperatures (790 and 760°F), design pressure (3,300 psig), coal SV (1.12 lb MAF coal/hr/lb catalyst), reactor diameter (15 feet ID) and refractory thickness (6 inches), composition of the make-up hydrogen-rich gas stream (stream number 9SX1 in Figure 12.4), flow rates and composition of the recycle gas

streams (stream numbers 9SX2, 2S28A and 2S27), expanded catalyst bed density (about 20 lb/ft$^3$ in the baseline design), catalyst properties, and the physical properties of the gas and liquid at the reactor conditions.

As shown in Table 12.~~3~~2, the key model predictions are: (1) the reactor weight: 1295 short tons, (2) the ebulated bed internal recycle rates (recycle/fresh feed ratio) of 6.1 and 3.3 for the first and second reactors, respectively, (3) reactor exotherms of 30 degrees for the first stage and 27 degrees for the second stage, and (5) gas velocities in reactors of 0.11 ft/sec in first reactor and 0.21 ft/sec in the second reactor. The reactor parameters are well within the design guidelines. For example, for the second reactor, Stage II, HRI used a gas velocity of about 0.2 ft/sec.

Table 12.~~4~~3 shows that the gas and liquid velocities are quite similar to those used in actual PDU-10 experiments for the H-Coal process (reference: Amoco Oil Company, Final Progress Report, "Study of Ebulated Bed Fluid Dynamics," DOE Contract DE-AC22-80PC30026).

**Table 12.~~4~~3**

**TYPICAL GAS/LIQUID VELOCITIES AND BED EXPANSION (Ebulated-BED REACTORS USED FOR COAL LIQUEFACTION)**

HRI H-Coal Coal Data: PDU-10*

| PDU Test | Liquid Velocity fps | Gas Velocity, fps | % Bed Expansion |
|---|---|---|---|
| 1 | 0.119 | 0.070 | 74 |
| 2 | 0.045 | 0.071 | 59 |
| 3 | 0.085 | 0.065 | 59 |
| 4 | 0.046 | 0.065 | 59 |
| 5 | 0.102 | 0.066 | 104 |

*Reference: "Study of Ebulated Bed Fluid Dynamics," Amoco Oil Company, DOE Contract DE-AC22-80PC30026, Final Progress Report, July 1983.

## 12.10 ASPEN/SP Fortran Implementation

The above described kinetic model was programmed in Fortran for use as a Fortran user block model in an ASPEN/SP process simulation. These Fortran subroutines are stored in the file USR2G.FOR. This file is listed in Appendix N. Subroutine USR2R is the main subroutine which controls the calculation logic flow as shown in Figure 12-3.

The functions of a few key subroutines are described below.

- USR2R is the main subroutine which provides input streams flows and sets the order of all functions such as mass balance in each reactor fluid dynamic calculations, kinetic calculations, phase equilibria, and energy balance calculations.

- Mass balance calculations are performed in subroutine USR02R. For each component entering the reactors, the outlet flow rate is calculated based on the inlet flow and the production rate generated from the yield distribution provided by the kinetic model. Since the kinetic model provides product yields for broad boiling range cuts, a simplified assumption is used to split each broad boiling range equally to the narrow boiling pseudocomponents used in the ASPEN/SP input file.

- USR02K performs the kinetic calculations. This routine calculates the the catalyst addition rate in each stage when the resid concentration at the reactor effluent is known. The catalyst addition rate to the first stage is calculated in subroutine USR2S1, and that to the second stage is calculated in USR2S2. Subroutine USR2RC provides the resid concentration in the liquid phase via a flash calculation using the product yields calculated from correlations based on Wilsonville pilot plant data.

- Fluid dynamic calculations are carried out in subroutine USR02F. The main quantity calculated is the internal recycle rate. The logic is to vary the internal recycle so as to expand the catalyst bed corresponding to the baseline design of 85.0 ft (total). Detailed phase equilibria at the reactor inlet along with various published correlations are used.

- Energy balance calculations are performed in subroutine USR2EB. An iterative scheme is used to calculate the effluent stream temperature based on the fresh feed preheat temperature. Detailed thermodynamic data are used to estimate the latent heat of vaporization, and a flash calculation at the reactor outlet is used to estimate the detailed vapor and liquid flows.

- USR02A loads the component physical properties.

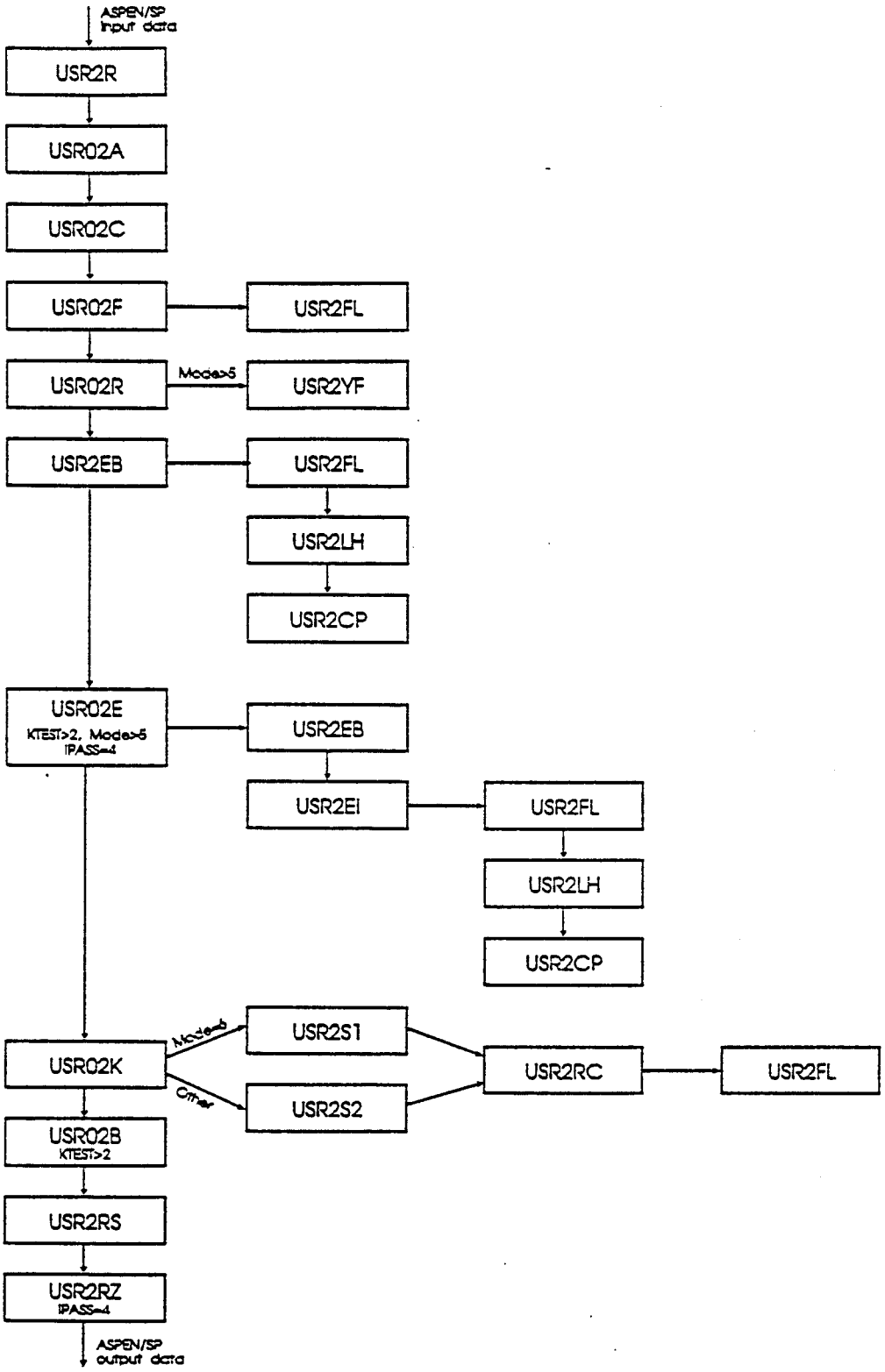


Figure 12.3: MAIN STRUCTURE OF FORTRAN USER BLOCK

o USR02B writes the reactor elemental balance to history file.

o USR2RS loads the calculated reactor effluent stream to ASPEN/SP.

o USR2RZ writes any warning messages to the summary report.

The model writes individual summary reports for each reactor. The summary report for the first reactor is written to the file DCL2R.REP, and that for the second reactor is written to the file DCL2R_M7.REP.

The kinetic model does not use all of the same input parameters as the other Fortran user block models that have been described earlier. The following integer and real input parameters are used by the kinetic model.

The five integer parameters and their functions are:

```
INT(1)   User block summary report control switch.
         0 => Write the complete user block summary report.
         1 => Skip the capital cost portion of the summary
              report.
         2 => Skip the capital cost and utilities portions
              of the summary report.
         3 => Skip writing the entire user block summary report.
INT(2)   User block summary report destination control switch.
         0 => Write the user block summary report to the normal
              ASPEN/SP output report file.
         1 => Write the user block summary report to a separate
              user block output report file on logical unit 62
              called DCL02.REP.
INT(3)   NOT APPLICABLE.
INT(4)   History file additional output control switch.
         0 => Write no additional output to the history file.
         1 => Write the only the subroutine entry and exit
              messages to the history file.
         2 => Write some additional output to the history file.
       3-5 => Write some more additional output to the history
              file.  Larger values generate more intermediate
              output.
INT(5)   Reactor selection switch
         6 => First coal liquefaction reactor.  (Yields are calculated
              in subroutine USR2R via a kinetic model for first stage
              reactor only.  This model is called P2RX1.)
         7 => Second coal liquefaction reactor.  (Yields are calculated
              in subroutine USR2R via a kinetic model for second stage
              reactor.  It is assumes that input are the yields from
              P2RX1 plus the recycle stream 2S27.  This model is called
              P2RX2.)
```

The twenty real parameters and their functions are:

| | |
|---|---|
| REAL(1) | Percent coal conversion based on fresh MAF coal entering the coal liquefaction reactors |
| REAL(2) | Future use |
| REAL(3) | Resid yield in reactor I, %MAF |
| REAL(4) | Overall unconverted coal, %MAF |
| REAL(5) | Resid loss in ROSE unit, %MAF |
| REAL(6) | Coal SV, lb MAF coal/hr/lb catalyst |
| REAL(7) | Fixed carbon, WT% MF |
| REAL(8) | Reactor internal diameter stage I and II, ft |
| REAL(9) | Maximum reactor weight, 1322 short tons |
| REAL(10) | Reactor I temperature, deg F |
| REAL(11) | Reactor II temperature, deg F |
| REAL(12) | Stage I pressure, psia |
| REAL(13) | Stage II pressure, psia |
| REAL(14) | Maximum gas velocity, ft/sec |
| REAL(15) | Unconverted coal in stage 1, %MAF |
| REAL(16) - REAL(20) | Future use |

## 12.11 ASPEN/SP Kinetic Model Reactor Simulation

The ASPEN/SP input file, T2V2S.INP, simulates the two-stage coal liquefaction reactor section of Plant 2. This input file is given in Appendix M. A schematic diagram of the logic flow of this simulation is shown in Figure 12.4. In this simulation, the compressor recycle gas loop is not included in an iterative calculation; instead, the flow rates and compositions of the make-up hydrogen stream (9SX1), treated recycle gas stream (9SX2), untreated recycle gas stream to the first reactor (2S28A), and untreated recycle gas stream to the second reactor (2S27) are supplied as initial guesses. From the model output, the estimated gas velocities in each reactor and the hydrogen partial pressure at the second reactor outlet should be checked to confirm that they are satisfy the design guidelines (gas velocity less than 0.25 ft/sec and the hydrogen partial pressure at the second reactor outlet is about 1950 psia). If the values do not satisfy the guidelines, the number of reactor trains or the recycle gas flow rates should be changed.

## 12.12 Executing the Coal Liquefaction Kinetic Reactor Model

The ASPEN/SP coal liquefaction reactor kinetic model is executed as follows.

1. Enter ASPENSET to set up the ASPEN/SP system and place the computer in the ASPENSP\RUNS subdirectory. Once done, this step does not have to be repeated unless the computer has been rebooted.

2. All the required files must be either in the ASPENSP\RUNS sub- directory or the ASPENSP\BAT subdirectory. The required files are given in Section 3. If missing, copy USR2G.FOR, OTHERS.FOR, and T2V2S.INP into the ASPENSP\RUNS subdirectory. If missing, copy ASP.BAT the ASPENSP\BAT subdirectory.

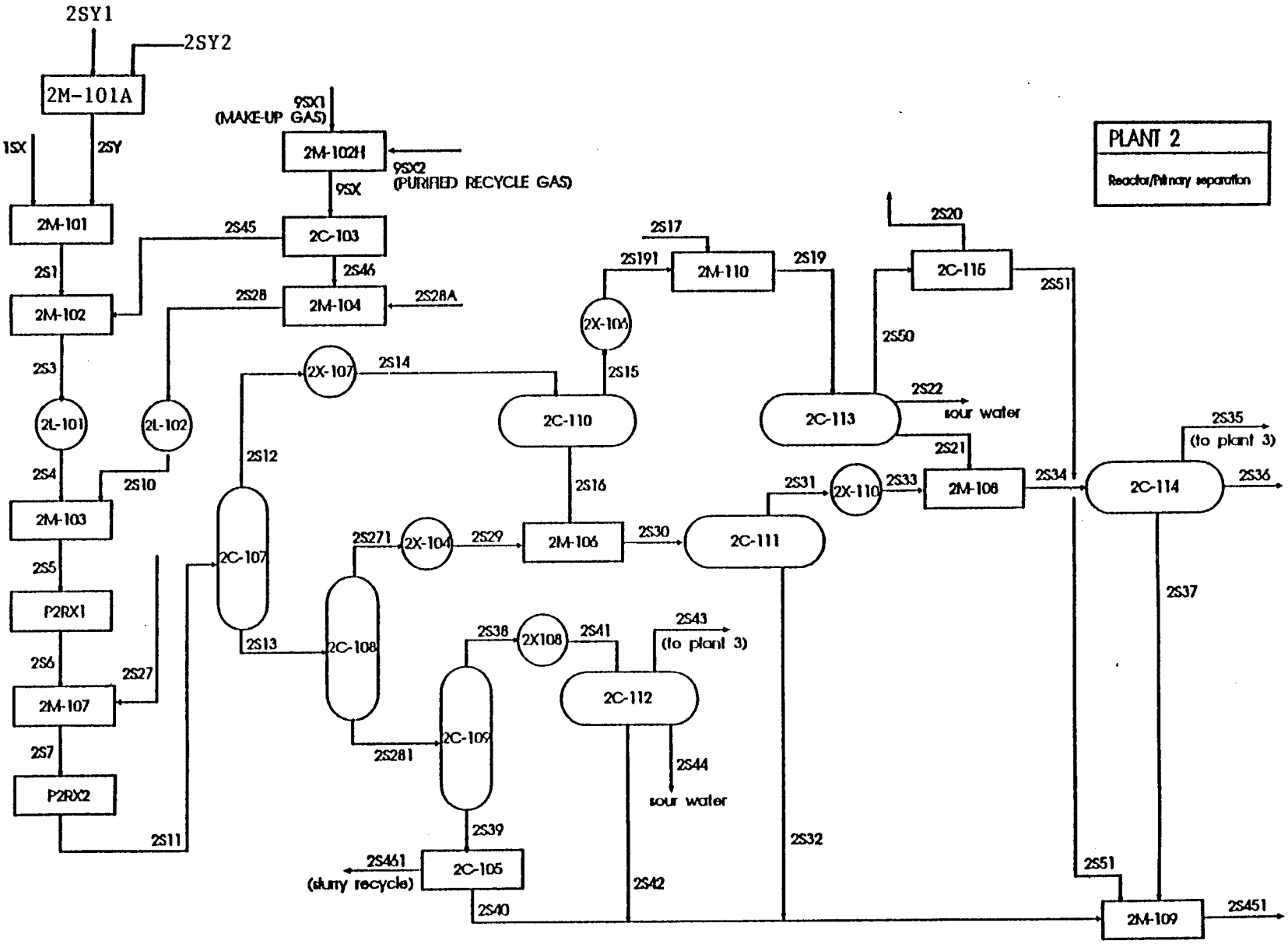


Figure 12.4

SCHEMATIC REPRESENTATION OF TWO-STAGE
COAL LIQUEFACTION REACTOR SECTION

3. Compile the USR2G.FOR file to create a USR2G.OBJ file by typing
   F77 USR2G <Enter>
   Once compiled, the file does not need to be recompiled unless the Fortran source code file, USR2G.FOR, has been changed.

4. Compile the OTHERS.FOR file to create an OTHERS.OBJ file by typing
   F77 OTHERS <Enter>
   Once compiled, the file does not need to be recompiled unless the Fortran source code file, OTHERS.FOR, has been changed.

5. Execute the ASPEN/SP process simulation model by typing
   ASP USR2G <Enter>
   and when prompted for the input file name enter
   T2V2S <Enter>

The ASPEN/SP process simulation program will now execute generating numerous output files. These will include several ASPEN/SP system generate files having the T2V2. filename. The model will also generate two report files, DCL2R.REP and DCL2R_M7.REP, containing the reactor summary report information for the first and second reactors, respectively.

## 12.13 Recommendations for Modifications to the Model

The current model was developed using data from Wilsonville Run 257-E, in which no interstage separator was used. Thus, the liquid/gas yields for the first stage had to be estimated based on past data. Because resid concentration is an important parameter in the kinetic model, the estimation of model parameters is affected by the lack of data on first-stage yields. The model can be fine-tuned using data from Run 261, in which an interstage separator was used. However, a different catalyst (not AMOCAT™-1C) was used in Run 261.

In the model, resid conversion has been defined based on the fixed carbon content of Illinois No. 6 coal. This can also be modified by using conventional definition for resid conversion (based on coal conversion only). Again, Run 261 data should be checked to modify the model for good data correlation.

Suggested future improvements to the model include more rigorous kinetics calculations for coal conversion based on operating conditions; in the current model, coal conversion is a design input. Prediction capability for product qualities (e.g., sulfur, nitrogen, hydrogen contents) of key liquid products, such as naphtha, distillate, and gas oil fractions could be added. As more experimental data become available, the model could be revised to include the effects of hydrogen partial pressure on resid conversion and product quality.