DOE/METC-83-67
(DE83013062)
Distribution Categories UC-88 and UC-92a

STATUS REPORT ON THE DEVELOPMENT OF THE COALBED WATER JET DRILLING SYSTEM

by

H. D. Shoemaker
K. M. Timmerman
C. W. Byrer

U.S. Department of Energy
Morgantown Energy Technology Center
Morgantown, West Virginia

March 1983

U.S. Department of Energy
Technical Information Center

TABLE OF CONTENTS

	Page
Introduction	1
Purpose and Objectives	1
Background	2
Development of the Drilling Head System and its Components	4
I. Drilling Head	7
A. Water Jet Nozzles	7
B. Jet Quality	10
C. Rotary Coupling	11
D. Instrumentation in the Drill Head	12
E. Seals	12
F. Drilling Head Construction	13
II. Drill String	13
A. Directional Control Features	13
B. Chip Removal	16
C. High-Pressure Hose	16
D. Other Drill String Components	17
E. String Modifications	17
III. Instrumentation and Control	19
A. Guidance and Mapping	20
B. Control	22
IV. Rotation and Advance Assembly	22
A. Cam	24
B. Shoe	24
C. Drive Gear	24
D. Sump Pump	26
E. Failure Analysis	26
V. Surface Equipment	27
A. Underreamer	27
B. Wellhead Hardware	27
C. Drilling Truck	27
D. High-Pressure Pumps	30
E. Water Supply	30
F. Power	30
G. Manpower	30
H. Safety	31

TABLE OF CONTENTS (Continued)

	Page
Summary and Conclusions	31
I. Capabilities	32
II. Limitations	32
III. Uncertainties	33
References	34

LIST OF FIGURES

Figure		Page
1	Long Hole Test	3
2	Cornering Water Jet Drill System with Simulated Coal Block	5
3	Water Jet Drilling System Layout	6
4	Water Jet Drilling Head	8
5	Water Jet Drilling Head Nozzle Locations Used in Long Hole Test	9
6	Water Jet Drill String	14
7	Drill String Stiffening Detail	15
8	Drill String Instrumentation Diagram	18
9	Water Jet Drill Instrumentation Control System	21
10	Water Jet Drill Equipment/Functional Diagram	23
11	The Rotation and Advance Assembly	25
12	Water Jet Drill Surface Equipment	28
13	Water Jet Drill Wellhead Hardware	29

STATUS REPORT ON THE DEVELOPMENT OF THE COALBED WATER JET DRILLING SYSTEM

INTRODUCTION

This report describes the background, objectives, and present status of the project funded at Sandia National Laboratories by the Morgantown Energy Technology Center to develop a system to drill horizontal holes in coal from a vertical wellbore with water jets.

One possible application of this technology would be methane drainage from coalbeds. The methane gas occurring naturally in coalbeds can become an impediment to underground mining as it is released into the work area by the mining process. The usual method of removing the methane is by large volumes of ventilation air across the mine face. However, the recent energy shortages have caused a reevaluation of this energy source. In fact, through the use of vertical wellbores and various methods of expanding the wellbore such as fracturing, it is possible to recover commercial quantities of methane (1)*.

Underground coal gasification (UCG) is another area of coal utilization which involves moving gas through coalbeds. The process requires permeable pathways in the coal between the vertical injection and production boreholes for the flow of air, oxygen, or steam and the products of combustion.

Most methane drainage and UCG schemes involve drilling holes into the coalbed. The holes are generally drilled by conventional rotary drills adapted for that purpose. Several procedures are used: patterns of vertical wells, long slant holes drilled from the surface to intercept the coal seam horizontally; horizontal holes drilled from the bottom of large vertical shafts; and holes drilled from mine working faces.

It is clear that a drill system which could be sent down a conventional vertical borehole, turned 90 degrees, and advanced into the coal seam would have direct application in extending the wellbore for methane drainage and in wellbore linking in UCG work. Recent progress in water jet cutting technology makes such a drill appear to be feasible.

PURPOSE AND OBJECTIVES

The specific purpose of the project is to develop the technology for drilling horizontal holes in coal seams from existing vertical boreholes using high-pressure water jets. Particular system performance requirements have been established in view of the applications mentioned earlier. These requirements include

- Drilling 100 feet horizontally in coal from a conventionally drilled vertical borehole at a depth of at least 300 feet.

---

* Underlined numbers in parentheses designate the references at the end of the report.

- Providing sufficient directional control of the drill to keep the hole in the coal seam.

- Locating the drill relative to the wellhead and providing a record of hole location.

Satisfaction of the first requirement should make the drill applicable to UCG well linking. The basic technology can then be improved and extended to permit drilling the longer holes in deeper coal required for most methane drainage projects.

Directional control of the drill is essential in all potential applications. The hole linking UCG wells should be near the floor of the seam to obtain optimum burning during the gasification process. In methane drainage the seams are deep and relatively thin, 3 to 8 feet. Hence, for best results in obtaining the methane gas from coal seams, the radial holes must be within the coal seam.

BACKGROUND

The technology for cutting rock and coal with high-pressure water jets developed significantly during the 1970's, through the work of leading investigators such as A. F. Conn, Hydronautics; J. B. Cheung and J. M. Reichman, Flow Industries; Fun-Den Wang, Colorado School of Mines; and D. A. Summers, University of Missouri-Rolla (UMR). A chronology of their work is contained in the proceedings of several of the International Symposia on Jet Cutting Technology and a study on the Status of Water Jet Drilling Research and Development by Boorz, Allen, and Hamilton (2).

During the period 1975 to 1978, Summers studied the application of water jet drilling to geothermal work under a contract with DOE (3). One of his conclusions was that it might be possible to drill out horizontally from the bottom of a vertical borehole with a water jet drill and in 1978 Sandia asked UMR to begin development of such a device (4).

The results of that work were prototypes of a drilling head, a drill string, and a mechanism to transfer the string around the corner at the bottom of the hole. A second study was then conducted by UMR to design, build, and field test an improved drilling head while Sandia developed the string, the round-the-corner device, and the guidance and control instrumentation. Dr. Clark Barker was the principal investigator for UMR during this study, which was completed in February 1981.

Field tests were conducted on the equipment by UMR in the fall of 1979 and 1980 [see References (5) and (6) for details]. The tests involved drilling horizontally into an uncovered coal seam in surface coal mines as demonstrated in Figure 1. The tests in 1979 were conducted in a Peabody Coal Company mine near Sparta, Illinois. Due to the absence of instrumentation for drill head location and correction, these tests were terminated when the drill head apparently began to enter the coal seam floor at a drilling depth of 35 feet into the coal seam. The tests in 1980 were conducted in another Peabody Coal Company mine near New Athens, Illinois. The equipment for this test included the water jet drill platform, drill string, drill head, and the associated hardware/instrumentation as illustrated in Figure 1. The instrumentation package utilized in the 1980 test series is described herein, along with improvements over the 1979 experiments.

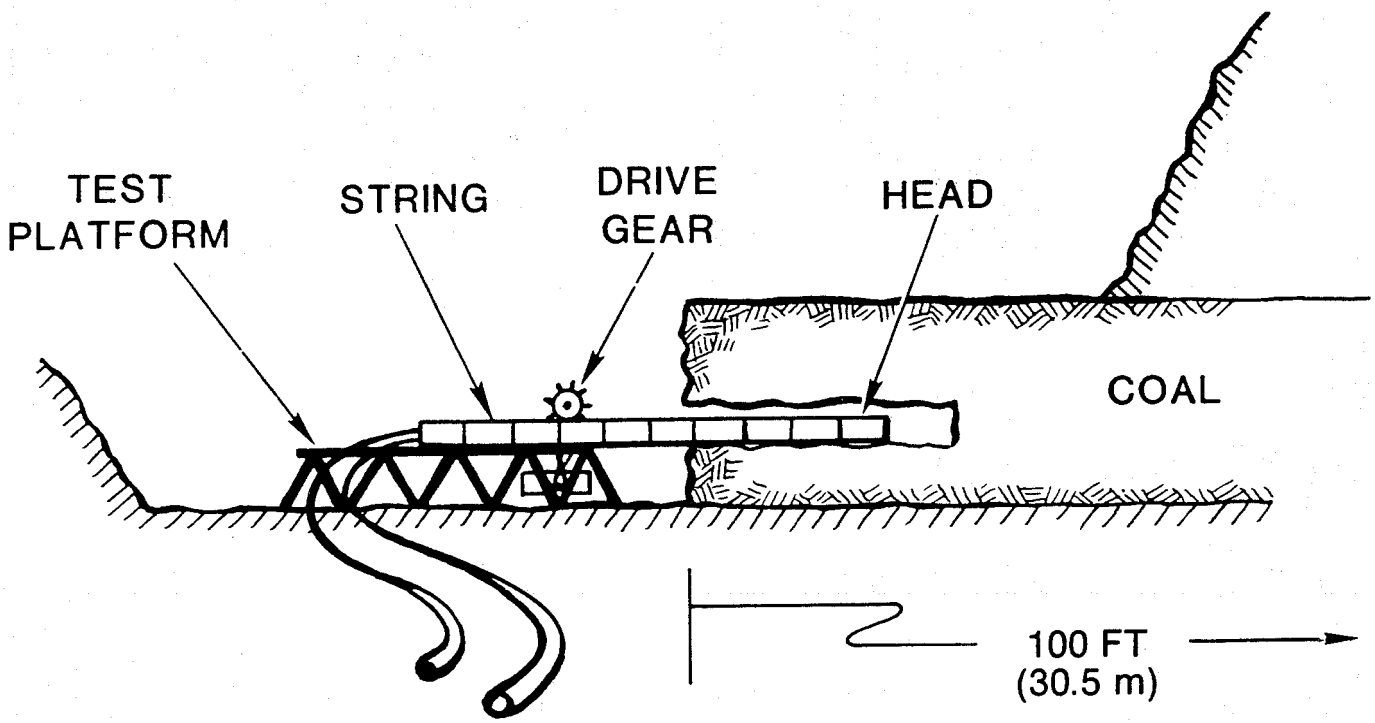

WATER JET DRILL

FIGURE 1

Long Hole Test

The 1980 test series was designed to drill long boreholes in the uncovered coal seam (Figure 1). These long borehole tests were conducted into a 40-foot by 200-foot block of coal. Detailed results of these tests are described in the section below on component development status. In general, the tests demonstrated the following:

- The drilling head and articulated drill string could make horizontal holes 6 to 8 inches in diameter up to 100 feet long in coal at 1 to 2 feet per minute.

- The instrumentation system could provide drill guidance data and a record of hole location.

- Problems caused by coal fines in the string, hard inclusions in the coal, loss of circulation, and inadequate pitch control required solutions.

In 1981, development of the water jet drilling system was undertaken by Sandia for DOE. They conducted laboratory tests with the round-the-corner water jet drilling system at their test site in Albuquerque, New Mexico, during the spring and summer of 1982 (6). These tests were conducted on a simulated coal block on the order of 5-foot x 5-foot x 20-foot long (Figure 2). The objective of this phase of the program was to test the rotation and advance assembly (round-the-corner) and the instrumentation package. In general, the tests demonstrated the following:

- With each of the five holes drilled, the ability to maintain the hole horizontal improved. The final hole deviated less than 4 inches over the 20-foot length of the hole.

- Drilling rates approaching 5 ft/min were attained in the simulated coal block.

- Valuable operating experience was also gained during this phase.

In the fall of 1982, the water jet drill was fielded in the P&M McKinley Coal Mine northwest of Gallup, New Mexico. The objective of this test was to demonstrate the ability of the system to drill a 100-foot hole into a high wall using the rotation and advance cornering assembly as represented in Figure 2. A hole 12 feet in length was drilled before water intrusion in the drill head and winter weather forced Sandia to abandon the field effort until spring.

DEVELOPMENT OF THE DRILLING SYSTEM AND ITS COMPONENTS

The drilling system is defined as all the equipment required to drill horizontal holes from an existing 16-inch vertical borehole. It includes both surface and downhole components, drilling and support equipment, instrumentation and control features, and power supplies. Some of the major components are identified in the system layout (Figure 3). Reference to that figure will facilitate an understanding of the following discussions of the operation of the drill and the development of its components.

The vertical hole is drilled and cased by conventional methods. Underreaming the maneuvering space is the first operation required of the water jet drilling system. After the underreamer is removed from the vertical hole, the rotation and advance assembly (R&A) is lowered to the maneuvering space. It is supported

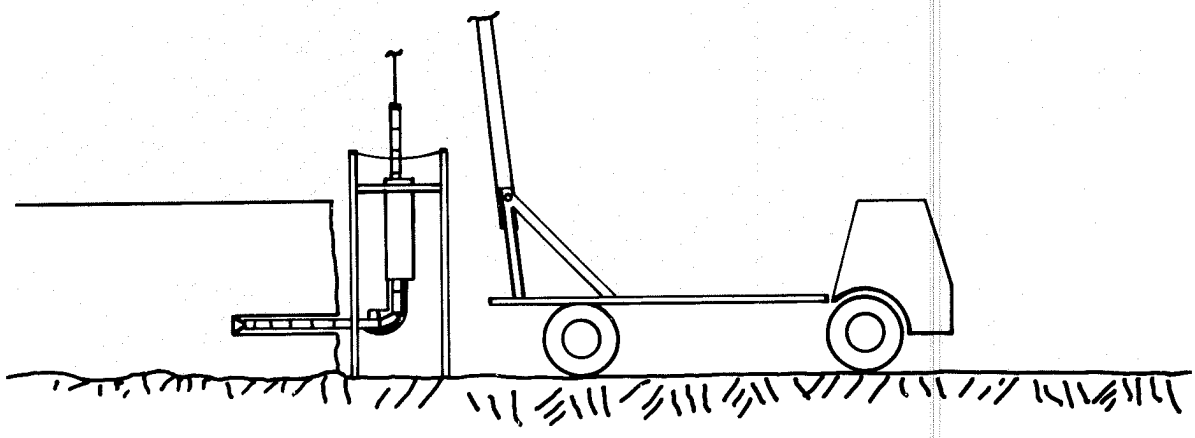

FIGURE 2

Cornering Water Jet Drill System With
Simulated Cool Block

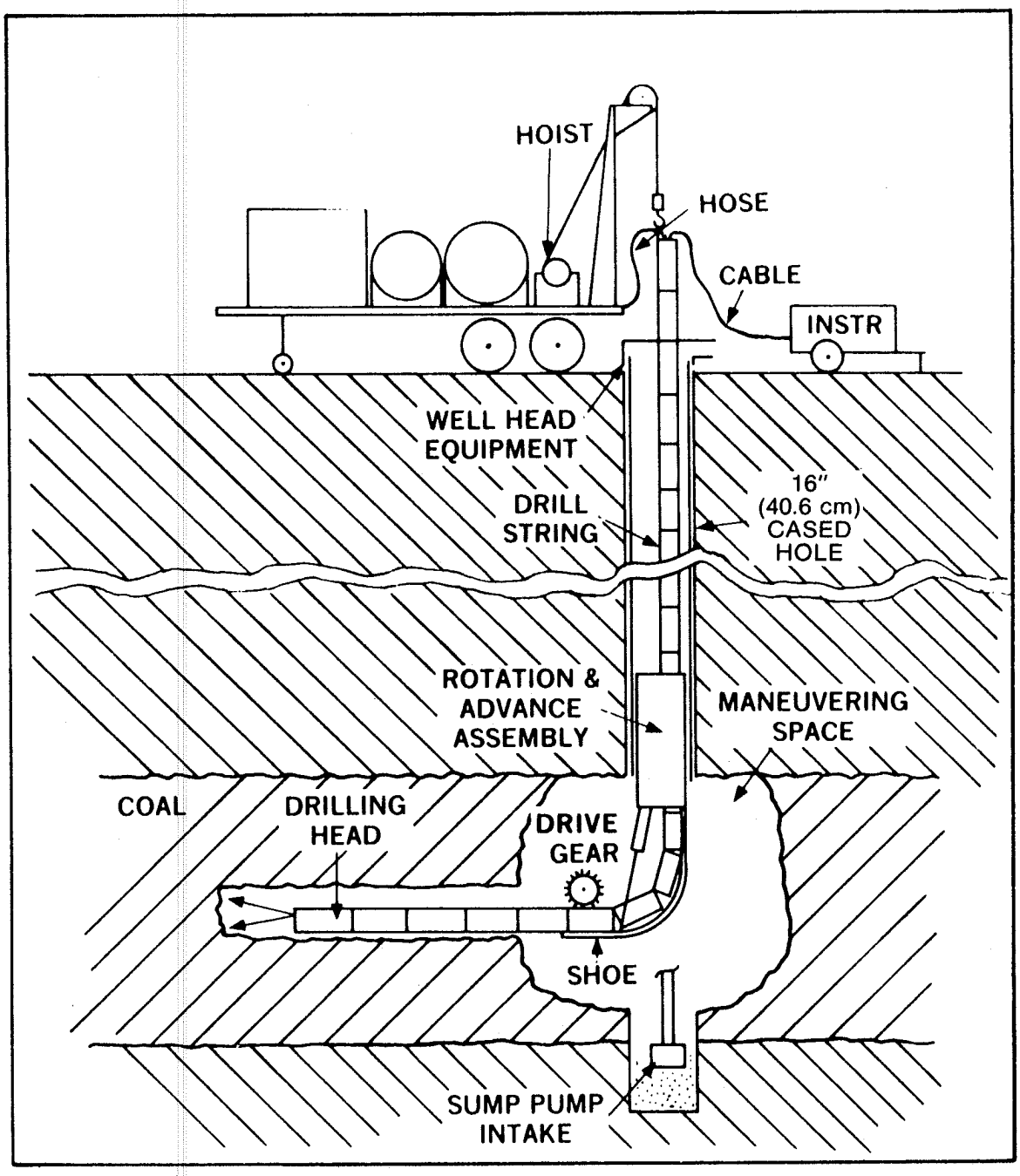

FIGURE 3

Water Jet Drilling System Layout

from the wellhead by the sump pump supply and discharge pipes. When the R&A is locked into place, the shoe is rotated to horizontal, forming a 90 degree cam surface. Next, the drilling head and drill string are lowered down the casing. The cam guides them around the corner and into the drive gear. The function of the drive gear is to apply horizontal advance and withdrawal forces to the string. The advance force is supplemented by the weight of the vertical part of the string, and the total withdrawal force includes that applied by the hoist. After the drive gear is engaged, water is supplied to the head at high pressure (5,000 to 10,000 psi) through a hose from a pump on the surface. The water is forced through a set of rotating nozzles forming jets which cut a clearance hole for the drill through the coal. The instrumentation network provides continuous data to the driller regarding the conditions and progress of the drilling system during these operations. The major components of the drilling system are listed below. Some design considerations and development results are described for each of them.

I. Drilling Head

The water jet drilling head is the key to the round-the-corner drilling concept. Three features of the drill make the operation feasible:

- First, only the set of nozzles that produce the cutting jets are required to rotate. The head and string do not. Therefore, the string can be "bent" and operated around a relatively sharp corner.

- Second, only the jets touch the coal to be cut. (Water under high pressure penetrates the natural fractures in the coal causing the structure to fail in tension and removing material.) Therefore, no conventional "weight-on-bit" requirements are present. The force required to advance the drill is that needed to overcome the nozzle reaction plus that needed to push the string along the horizontal hole. The total force is generally in the hundreds of pounds.

- Third, drilling power is delivered to the head through a flexible hose. No right, high-strength torsional members are required.

A. Water Jet Nozzles

As shown in Figure 4, the head receives high-pressure water from the surface and transfers it through a rotary coupling to a distribution plate which holds and rotates the nozzles. In this initial full-scale prototype, positions for six nozzles are provided in the current head configuration. They are fixed at various angles, ranging from 10 to 30 degrees, to the head axis. Some are aimed to cut the periphery of the hole as they sweep their circular path while others cut ahead and across the center of the hole. Nozzles with orifices ranging from .032 to .078 inches are used. The number of nozzles used is determined by the type of material to be cut and the size of the hole desired. Hence, not all nozzle positions are utilized at any one time.

Figure 5 represents a combination of nozzle angles and orifice diameters that proved to be effective in initial field tests. The

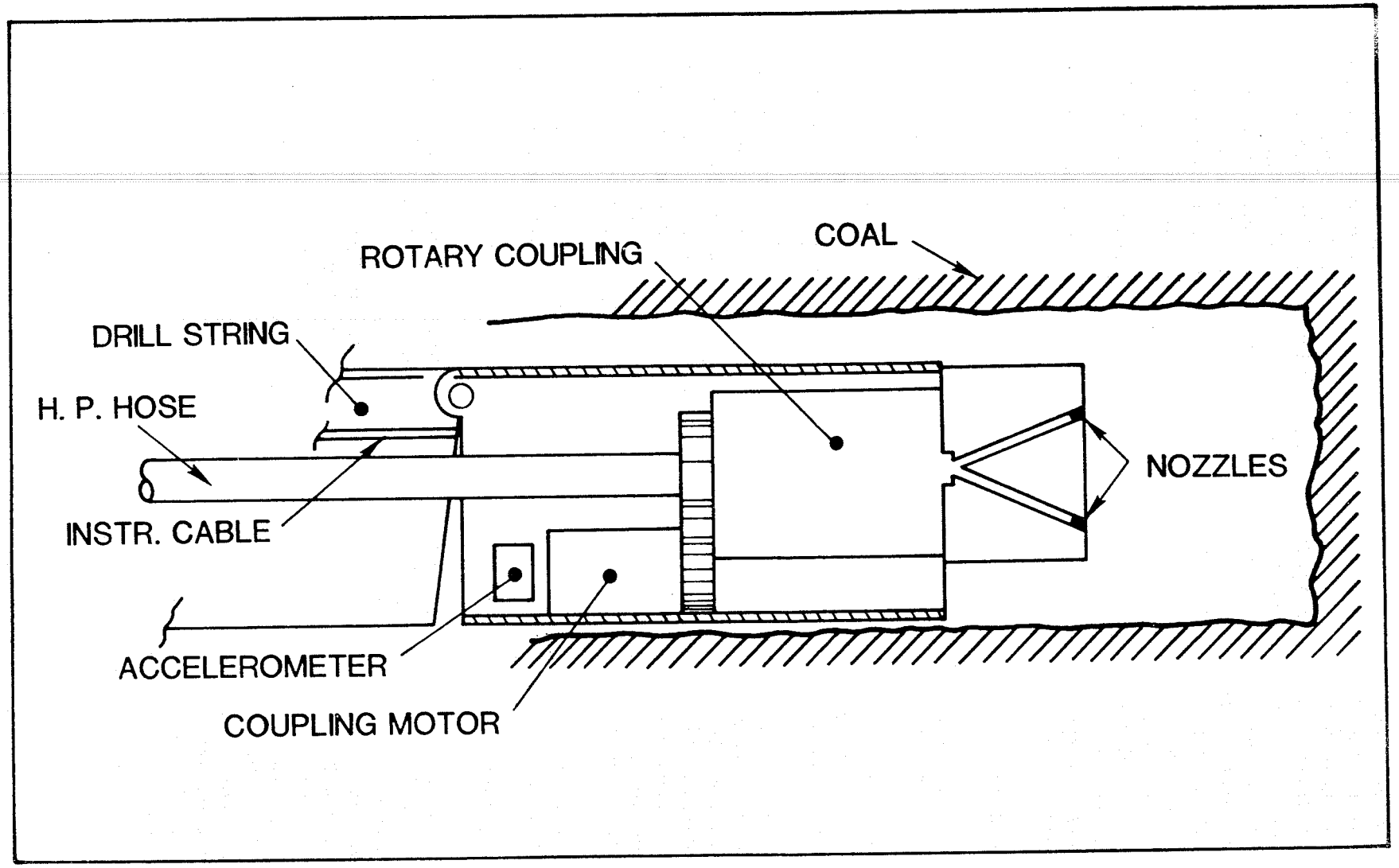

FIGURE 4

Water Jet Drilling Head

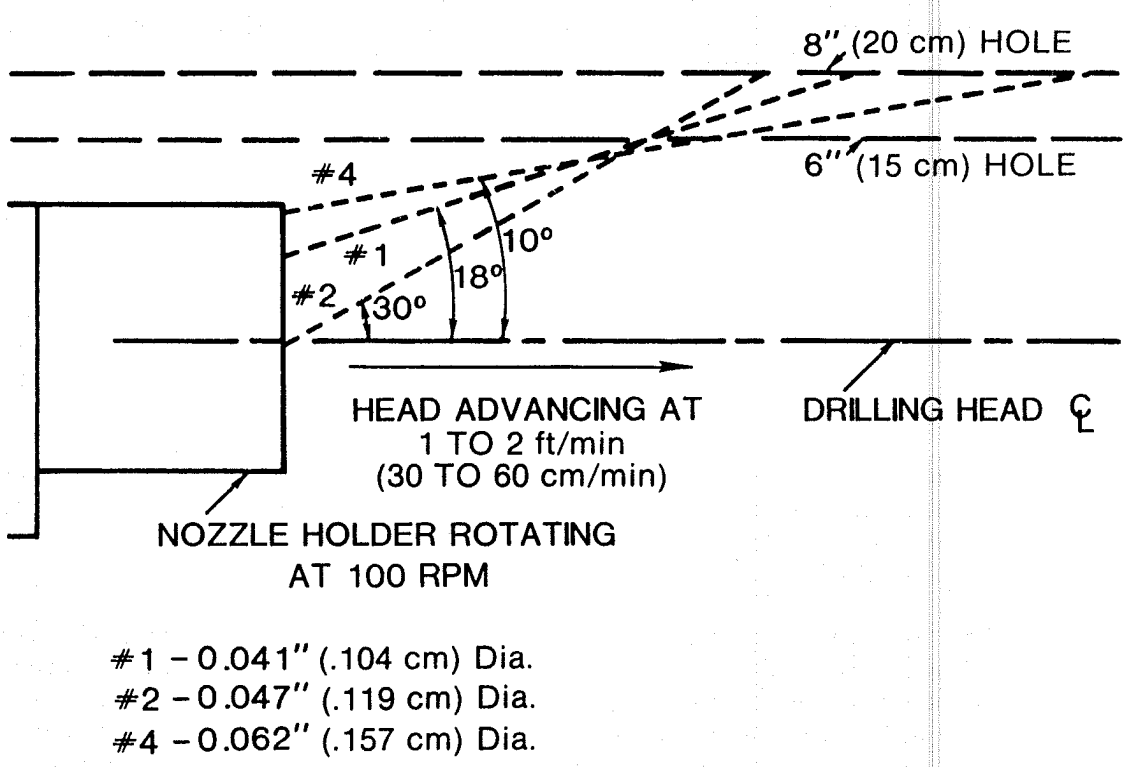

FIGURE 5

Water Jet Drilling Head Nozzle Locations Used in Long Hole Test

nozzles deliver approximately 25 gpm to the coal surface with 10,000 psi water pressure in the rotary coupling (Figure 4). This coupling rotates at approximately 100 rpm. These combinations of nozzle angles and orifice diameters (Figure 5) may not produce optimum results. Other nozzle angles, orifice sizes, and rotational speeds may produce faster cutting rates. However, this combination did cut an 8-inch diameter hole at 2 to 3 ft/min in clean coal. Interlayering of shale in the coal slows the cutting rate. The interlayering of 1/2-inch thick shale layers reduces the cutting rate to 1 ft/min and stops it when the shale layer approaches a thickness of 2 inches.

Experiments have showed that little difference in cutting rate was produced by changing coupling rotation speed from 80 to 120 rpm. Additional study will produce a better match of nozzle parameters and coal conditions.

B. Jet Quality

Jet quality is an important factor in cutting efficiency. A jet that maintains its liquid core 1 foot or more beyond the nozzle can cut coal up to 18 inches ahead of the drill. A major contributor to jet quality is a long, straight approach to the nozzle. The length of this straight approach required for good jet quality is not known because of the very large Reynold's numbers at these high pressures and water volumes. Hence, the redesign of the drill head provided for a longer straight approach to the nozzles.

Other water jet improvements are possible with "flow straighteners" at the nozzle inlets as well as better nozzle design. The nozzles used are the Leech and Walker type with 13-degree conical inlets and cylindrical orifices.

The jet cutting action produces chips and bits of coal of various sizes which must be removed from the hole. Chip size is important because large chips do not wash from the horizontal hole easily and are difficult to pump to the surface from the sump below the rotation and advance assembly (Figure 3). The field tests demonstrated that 95 percent of the chips, whether coal, shale, or pyrite, would fit individually in a 1-inch cube. The others were 2 or 3 cubic inches in volume. This may be an acceptable ratio, but if the large chips prove to be troublesome, different nozzle arrangements will have to be used to produce smaller cuttings.

All of the field tests of the drilling head produced holes that sloped slightly (<3 percent) uphill. They drained naturally and permitted the jets to work in an air/slurry mixture. Jets in a downsloping hole must operate under water, a condition known to restrict jet cutting range. Lab experiments, conducted by UMR determined that the head is capable of cutting a clearance hole under 4 feet of water at about 1 ft/min. Until field tests are conducted in a downsloping hole, its effect on cutting rate, as well as chip removal, remain uncertain.

Also, all the field drilling was done in uncovered coal seams. Therefore, the effect of formation pressures on cutting rate and hole stability have not been determined. Work by other investigators indicates that no serious problems should be encountered in that area.

The laboratory tests of the drilling head during the summer of 1982 produced holes that were nearly horizontal in a simulated coal block. The coal block was approximately 5 feet x 5 feet x 20 feet and composed of cement and coal. The mix formula was 10 parts 3-inch or less subbituminous coal, 8 parts Class F flyash, 1 part portland cement, and 4 1/2 parts water (all by volume). The final hole of five holes drilled in the simulated coal block deviated less than 4 inches (~1.5 percent) over the 20-foot length of the block.

C. Rotary Coupling

The rotary coupling receives 20 to 25 gallons of water per minute at pressures between 5,000 and 10,000 psi and delivers them to the rotating nozzles (Figure 4). Two special requirements for this coupling application are small size and durability. Six commercially available models were subjected to rigorous tests in the UMR lab before one made by Partek was chosen for use in the drilling head. After 40 hours of testing, there was no noticeable increase in leakage or increase in torque required to turn the Partek coupling. The other couplings failed in less than 10 hours.

The coupling used in the latest head design was a modification of the basic Partek system. Shaft and bearing diameters have been reduced slightly to reduce coupling OD. The fluorocarbon spring seal which performed so well in the lab tests has been retained.

An unexpected characteristic of the Partek coupling was its relatively low torque requirement. That requirement made possible a switch from a hydraulic drive motor to a DC electric motor with a gear reducer. The advantage of this substitution was the reduction in space required for the drill string. (The two hydraulic hoses required for the fluid motor are replaced by one cable.) This change performed well in the lab tests at Albuquerque but did not appear to give the rotational speed stability needed in the field tests in the P&M McKinley Coal Mine northwest of Gallup, New Mexico, in November and December 1982. The higher torque of a hydraulic drive motor may be required when the testing resumes in the spring of 1983.

As discussed below, additional water must be piped to the head to aid in washing chips from the hole. This suggests using a water-powered motor to drive the rotary coupling and discharging the exhaust into the hole. The idea was abandoned when an exhaustive search produced no motor manufacturer who would claim a reasonable life for its motor when using water.

D. Instrumentation in the Drill Head

The instrumentation of the drill head was designed to determine the location of the head with respect to a vertical borehole and whether the water jets were cutting coal. The information needed for proper functioning of the drill head was determined to be:

- The angle or pitch between the axis of the head and the earth's gravity vector, as is measured by an accelerometer. The detail on the drill head instrumentation is presented in the Instrumentation and Control Section.

- A method for detecting when the drill head encounters an obstacle while drilling. Damage to the rotary coupling can occur when an obstacle is encountered and forward progress of the drill head is blocked. This damage can be caused by the several thousand pounds of vertical drill string in a deep hole pressing around the corner in combination with the force from the drive gear (Figure 3). In early tests conducted by UMR, they incorporated a strain gage system in the head that was designed to detect increased axial strain in the head body. This signal was processed and used to stop the drill hoist and drive gear. However, this system did not produce a large enough signal to properly indicate when an obstacle had been encountered. Hence, the immediate solution was to incorporate a thrust washer in the new head to protect it from most axial loads encountered.

- The rotary coupling speed to ascertain that the nozzle holder position of the head is rotating. This is an important source of diagnostic information and is useful operationally. The effect of coupling speed on cutting rates can be measured, although isolating its effect is sometimes difficult. Perhaps more important is the fact that coupling rotary speed reduction provides the driller with the first indication that the head may be contacting an obstacle. The speed is measured by a Hall effect sensor which detects the rotation of a 25 pole pair circular magnet attached to the end of the rotary coupling.

- The water pressure at the rotary coupling to determine that the proper water pressure has been supplied to the nozzles. The pressure is determined via a pressure transducer located at the rotary coupling water inlet.

E. Seals

In addition to the high-pressure fluorocarbon seal mentioned earlier, other seals are used in the head to prevent water and dirt from entering the bearings and electronics areas. Leaks during the 1980 field tests caused considerable corrosion and electrical failure. Ambient hydrostatic pressure exceeded estimates when chip dams blocked the escape of water from the hole. The redesigned seal system should solve those problems.

F. Drilling Head Construction

The body of the drill head was constructed of 7075-76 aluminum because of its corrosion-resistant and nonmagnetic properties. These characteristics of aluminum were necessary because of the water and coal environment, the proximity of the magnetometer in the drill string (see Figure 4 and the Instrumentation and Control Section) and the Hall effect sensor for the rotary speed of the rotary coupling.

The current model of the drill head is 19 inches long, the length required to package the head components (Figure 4). The length of the drill string boxes (17 inches), the average turning radius of the rotation and advance assembly (24 inches), and the minimum vertical well casing diameter (16 inches) depend upon the drill head length. Therefore, any efforts to reduce the vertical well casing diameter must be aimed at reducing the drill head length.

II. Drill String

The mechanical principle strongly influencing the design of the drill string is illustrated when one "pushes on a rope." However, this "rope," is extraordinary in that it must be flexible where it moves through the cam (the rotation and advance assembly) and must be stiff above and below that point (Figure 3).

An approximate solution to the design problem was obtained by making the drill string of 17-inch sections (boxes) of 3- x 5-inch rectangular steel tubing and hinging them together at the top corners (Figure 6). The hinges and box ends are accurately machined and joined with 3/8-inch roll pins so that there is little axial misalignment and torsional flexibility between boxes. The result is a drill string that is stiff torsionally, laterally, and vertically downward (when operating horizontally) and is essentially straight when in axial compression. The drill string is flexible vertically upward and the bending force required is that necessary to overcome the stiffness of the hoses and cables housed within the drill string.

A. Directional Control Features

For the purpose of the following discussion, the drill string boxes are numbered starting directly behind the drilling head (Figure 7). The first four boxes are nonmagnetic stainless steel. All the others are mild steel.

A system for additional stiffening of the first 7 feet of the string, including the head, is provided to improve directional control of the drill (Figure 7). A hydraulic cylinder located in Box 4 applies tension to a cable fixed to the lower rear plate of the head. The cable limits the drill string's upward flexibility (stiffens it) and forces the pitch of the leading 7 feet to approximate the pitch of the hole. (The cylinder is depressurized when the first four boxes are passing through the rotation and advance assembly; see Figure 3).

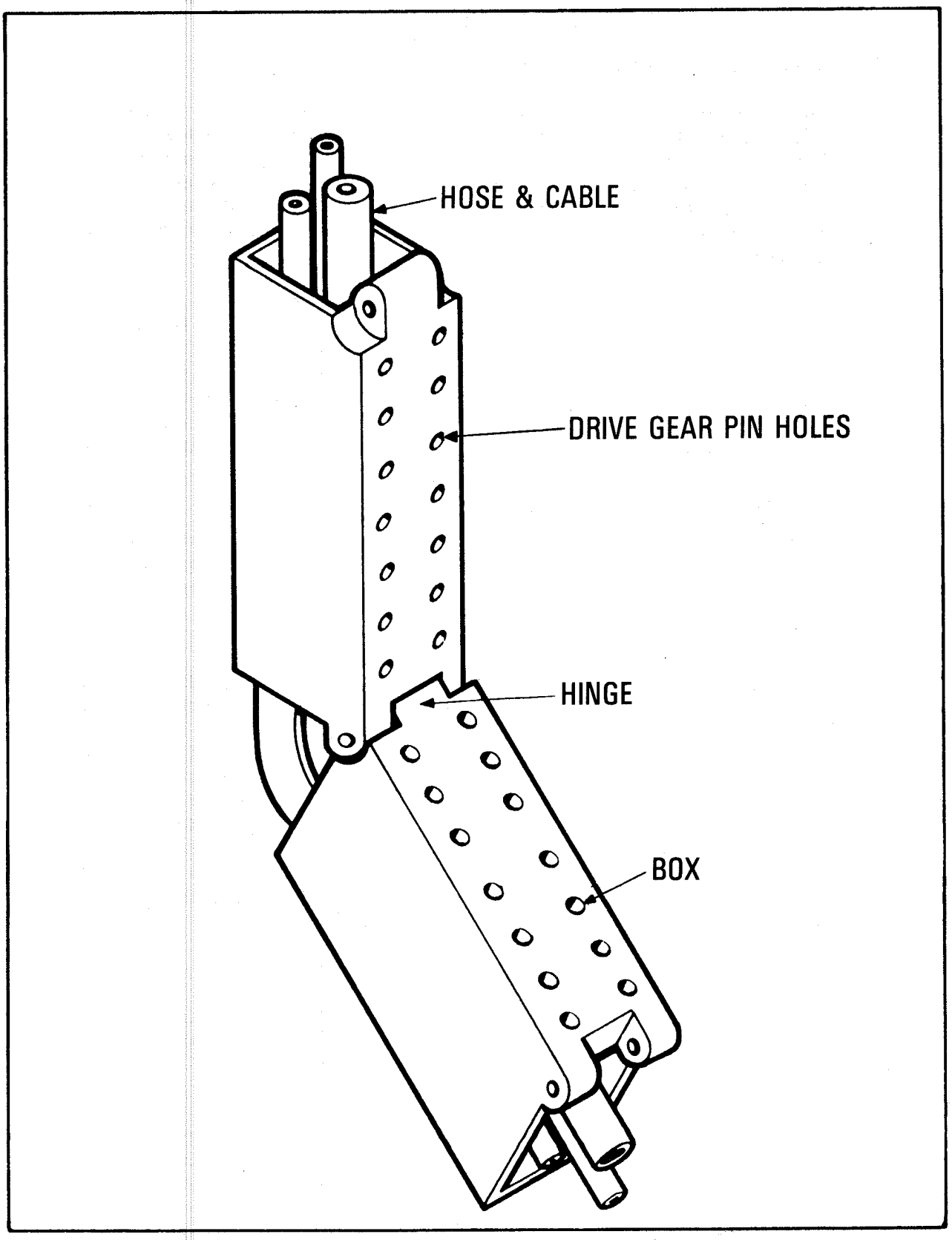

FIGURE 6

Water Jet Drill String

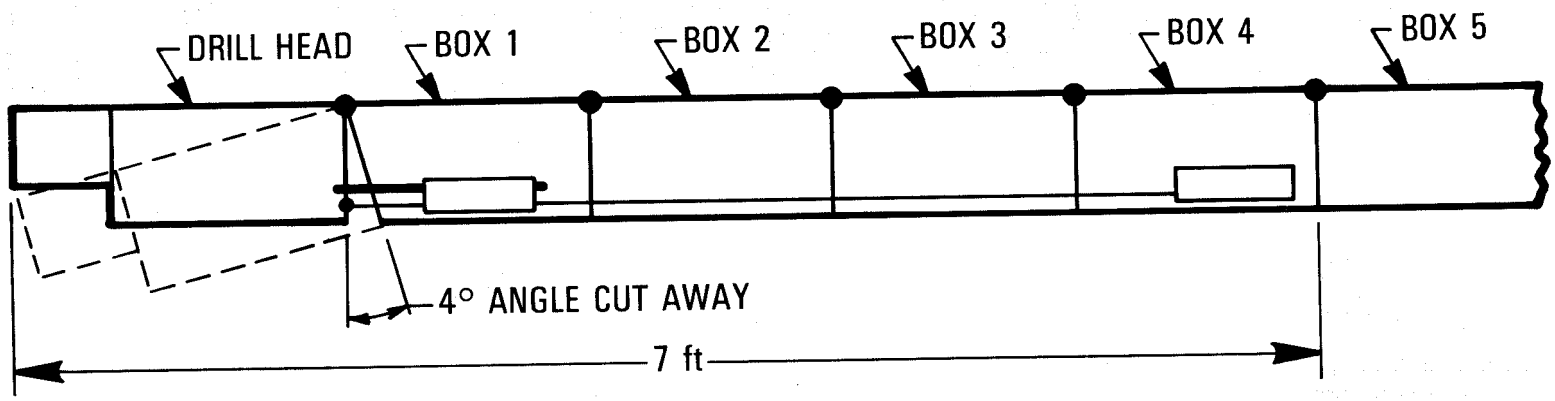

FIGURE 7

Drill String Stiffening Detail

The leading end of Box 1 is cut away so that when the stiffener cylinder is pressurized, the cable rotates the head down until its axis is 4 degrees below the drill string axis (Figure 7). The purpose of this feature is to permit drilling direction changes if the hole is rising in the coal seam or the seam is dipping downward. Another cylinder fixed in Box 1 and bearing on the head overcomes the force of the stiffener when it is pressurized, and rotates the head up to alignment with the drill string. The laboratory tests during the summer of 1982 at Albuquerque demonstrated the need for a larger cylinder in Box 1 for better drill string control.

Field tests indicated that the drill had a tendency to rise when drilling. One possible cause was the presence of chips which wash under the drill head and drill string and caused them to ride up. In those tests, drill head pitch angles of +2, 0, and -2 degrees relative to the string were available. Because of the continental tendency of the drill to rise, the +2-degree position was unnecessary. That is while drilling 100 feet with the drill head pitched down at -2 degrees the hole rose 34 inches. The available pitch angle was increased to -4 degrees to provide a greater angle of attack between jets and the coal bedding plane (Figure 7).

B. Chip Removal

The chips produced by the jet drilling action must be washed into the sump (Figure 3). Early tests showed that the 20 to 25 gpm pumped through the high-pressure nozzles was not sufficient to remove the chips. A low-pressure hose was subsequently added to the drill string which conducts 30 to 40 gpm at 300 psi from a pump on the surface to a tee and two large nozzles through the side walls of Box 1. The nozzles (aimed uphole) direct this "flushing" water uphole between the string and the walls of the hole to assist in chip removal.

It should be noted here that hole diameter affects chip flushing efficiency. If the hole is much larger than 8 inches in diameter, the water flow velocity is too low to move the chips. If the hole is too small, large chips tend to wedge between the drill string and hole wall. For these and other causes, the field test drilling procedure generally included periodic backing of the drill string to wash the hole clear of partial chip dams. The presence of the dams was detected by the reduction in effluent. In actual down-the-hole and round-the-corner drilling this loss of flow into the sump will be more difficult to detect.

C. High-Pressure Hose

The high-pressure hose possesses two characteristics that warrant special attention. First, because it is manufactured on mandrels to facilitate braiding the four wire sheathes and those mandrels are at most 100 feet long, the hose cannot be obtained in sections longer than 100 feet. Connections between sections are rigid and about 7 inches long. In drill strings longer than 100 feet, those connections must be fixed between hinges to permit string articulation in the rotation and advance assembly.

Locating the connections in the string is complicated by the second special hose characteristic. When the hose is pressurized, its length can change from +2 to -4 percent. Hence, 12 feet of an unsupported 300-foot high-pressure hose could disappear downhole when the hose is pressurized. Special winding at the factory or use of a synthetic material may reduce the percentage of length change. It may also be necessary to locate a manufacturer that can fabricate larger lengths of hose.

D. Other Drill String Components

The pitch control hydraulic cylinder, the stiffener cable, the flush water hose, the high-pressure hose, and the tee in Box 1 have been mentioned. In addition to these, two electric cables pass through the drill string boxes. Box 2 contains the guidance sensor package (Figure 8). It houses two accelerometers which measure drill string pitch and a three-axis magnetometer which measures drill string azimuth. Box 3 contains the Digital/Analog Serial (DAS) Converter Module. This device receives all data signals from the instruments in the drill head and Box 2, processes and transmits them to the computer on the surface. The stiffener cylinder is bolted to the wall of Box 4 (Figure 7). Boxes 5 and up (Figure 7) contain the following hoses and cables:

- High-pressure hose.
- Flush-water hose.
- Pitch-control cylinder hose.
- Stiffener cylinder hose.
- Data cable (from the DAS module).
- Coupling motor power cable (from the head).

The laboratory testing on the simulated coal block in Albuquerque (1982) demonstrated the need for a modification in the high-pressure and flush-water hoses because the flux gate magnetometer was not operating reliably due to the steel wire braiding in the hoses near the magnetometer. Hence, a portion of these two hoses was replaced with synthetic hose before the testing began at Gallup, New Mexico. This resulted in an ability to read azimuth with less than a 1-degree error through a 15-degree roll and a 20-degree pitch.

E. String Modifications

Another phenomenon observed during the field tests was the packing of coal fines in the drill string. A large part of the chips were very fine particles and were washed into the drill string boxes through the joints and drive gear pin holes (Figure 6). Water flow within the string was not enough to carry the fines uphole, so they settled out and packed tightly around the hoses.

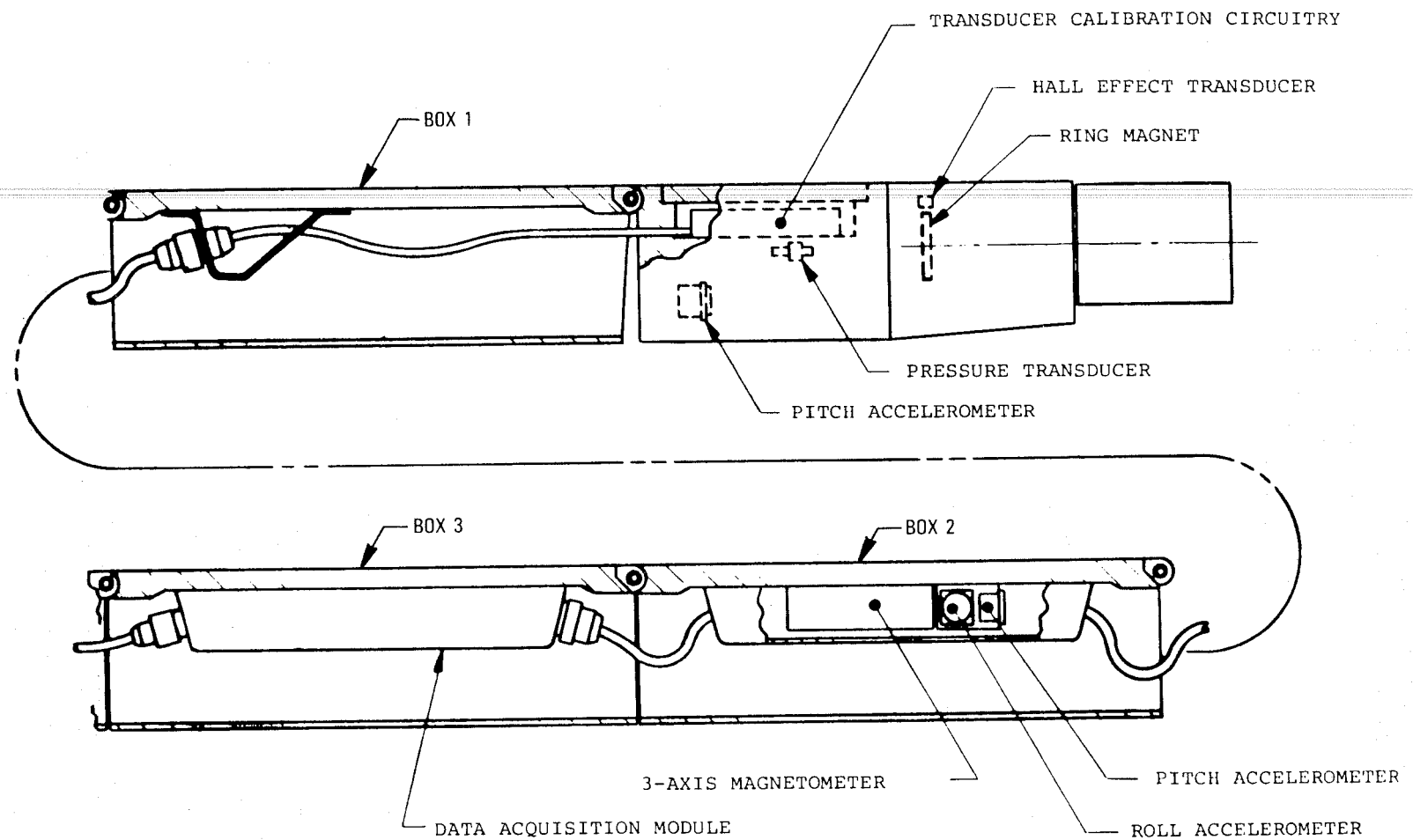

FIGURE 8

Drill String Instrumentation Diagram

Fines filled Boxes 1 through 30 in the 100-foot hole drilling test. The material may have interfered with the hose/box translation required for drill string articulation through the rotation and advance assembly.

Three drill string modifications were performed to alleviate the problem. First, the drive gear pin holes in Boxes 1 to 4 were closed to reduce entry paths for the fines. Second, a portion of the flush water was released at the tee into Box 1 to aid in washing the fines up and out of the string. Third, a sponge-rubber gasket was added to the aft end of the drill head to close the gap between the head and Box 1. Neither the testing at the laboratory in Albuquerque nor in the field in a coal mine near Gallup, New Mexico, have demonstrated the usefulness of these new features. (The distance drilled in all cases was too short, 20 feet and 12 feet, respectively).

The drive gear pin holes essentially function as a rack to the drive gear's pinion. The horizontal force is applied to the string through the pin holes in order to push the string into the hole and pull it out. The pin and hole arrangement and the hinge design leave the top of the boxes smooth. Thus, they can pass the rotation and advance assembly rollers easily when the drill string is tripping out (Figure 3). The axial spacing of the pin holes is the smallest spacing which straddles the hinge. Lateral spacing is that required to clear the drill head cylinder.

The drive gear/box pin hole function was tested in the field and performed without problems. The drive gear even crushed coal chips that rode out on top of the boxes, a feature which improved the confidence in proper rotation and advance assembly performance.

Finally, a note about the drill string in surface operations: in considering the problem of adding sections of drill string while drilling, it was decided that minimizing the number of connections in the hoses and cables was an important objective. As mentioned earlier, the high-pressure hose was obtained in 100-foot pieces and the cables and hydraulic hoses were available in lengths of 250 or 500 feet. Ten-foot sections of drill string (7 boxes) weighed 100 pounds, a convenient length and weight for handling. The drill string adding procedure adopted was to thread 250-foot sections of hose and cable (100-foot sections for high-pressure hose) through 10-foot sections of drill string on the drill string rack prior to commencement of drilling. A drill string section was picked up by the tool hoist as needed, slipped along the hoses and cables, and pinned into place at the end of the downhole drill string.

Additional discussion of surface operations is included in the section below on Surface Equipment.

III. Instrumentation and Control

The primary functions of the instrumentation system are to provide operational and drill guidance data to the driller and to provide a record of hole location for the coal miner. The control system is used by the drilling crew to operate the equipment in producing the desired

horizontal holes. The instrumentation control system is depicted in Figure 9 and some of the more important aspects of the instrumentation and control equipment are reviewed below.

A. Guidance and Mapping

Data for these functions are gathered by the accelerometer in the drilling head, the accelerometers and magnetometer in Box 2 of the drill string, and by the data system operator at the computer keyboard. The information from downhole is wired directly into the computer.

The computer processes the raw data and calculated head displacement on three axes. The operator enters the number of the drill string box which is at a reference point on the wellhead, the computer updates the azimuth and pitch meter readings at the driller's control station (DCS) and the printer prints out total drill penetration (TL), change in penetration (DL), azimuth (AZ), drill string pitch (PS), drill head pitch minus drill string pitch ($P_H - P_S$)*, and change in axial (DX), lateral (DY), and vertical (DZ) displacement of the drilling head. Coupling pressure, coupling rotary speed, and water supply pressure are displayed continuously at the DCS.

It was determined that the pulses in the high-pressure line produced by the triplex pump seriously affected the accelerometers. During the Fall 1980, Illinois field tests (5), the drill was stopped and the pump shut down at every fifth box to obtain rational pitch readings. This method of operation gave reasonably credible instrumentation readings. The $P_H - P_S$ readings were of doubtful quality, but the P_S and DZ data readings were credible. In fact, the vertical displacement data indicated that the hole was sloping upward and rose a total of 4 feet in 102 feet. A post-test survey showed the actual rise was 34 inches.

Modification to the data processing equipment included the addition of filters to reduce the pump pulse effects in the accelerometer circuits. New seals and general ruggedization of the instruments in the drill head and drill string should improve the data gathering reliability and mapping accuracy.

The rotary coupling speed and coupling pressure sensors performed satisfactorily in the field tests. (See the Drilling Head Section for additional comments on these items.) It was determined, for example, that the pressure drop through 100 feet of the 1/2-inch ID high-pressure hose was about 500 psi and 800 psi through 200 feet.

Finally, it was determined early on that to enable the driller to keep the drill in a thin gassy coal seam, the proximity of the drill head to the roof or floor of the seam must be known as drilling proceeds. Specifications were written for a coal seam boundary

---

* This is the angle between the head and the drill string. It should read -4 degrees when the pitch control cylinder in Box ± is depressurized.

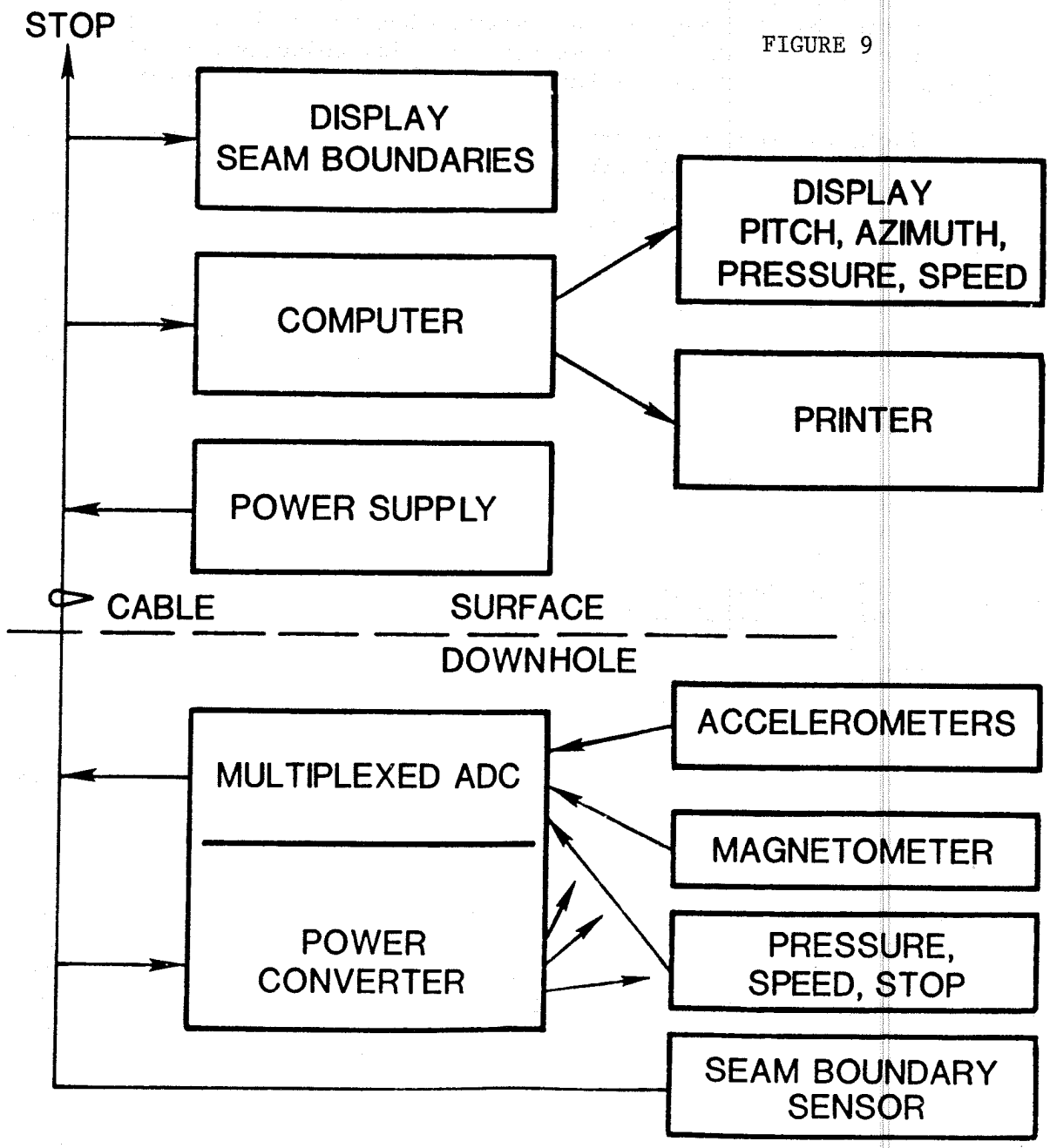

FIGURE 9

Water Jet Drill Instrumentation Control System

sensor to be located in Box 1 of the drill string and a data display unit from which the driller could determine the position of the drill head relative to those boundaries. No acceptable responses to the request for quote (RFQ) were received. The specification was rewritten but the RFQ was not reissued because of budget and time constraints and the fact that the essential objectives of the project can be achieved without a coal seam boundary sensor.

In fact, the technology for sensing seam boundaries is available in forms adaptable to this application. One of two techniques is generally used. Because the shale that commonly lies above and below coal seams is an emitter of gamma rays and coal is not, gamma detectors can be used to sense the proximity of the interface. Among the companies that are developing this technique are CONOCO and Foster-Miller Associates. The other scheme places antennas in the drill string and uses radar to detect the interface. ENSCO and Southwest Research Institute are performing research on this method.

B. Control

There are three primary control functions in the drilling system and several secondary ones. The primary functions are those considered essential to the immediate operation of the drill.

The first primary control function is hoist and drive gear speed control. The hoist controls the speed of the drill string in and out of the hole and the drive gear applies a force to the drill string which is nearly independent of drill string speed. Power to both hydraulic motors is supplied through a single four-way valve at the driller's control station. Flow control valves are used to adjust the speed of the hoist motor and pressure-reducing valves control the torque produced by the drive gear motor. The system is designed to provide line speeds from 1 to 10 ft/min and a maximum hoist capacity of 10,000 lbs.

The second primary control function is drill head pitch control for directional drilling guidance. The driller has the drill head and drill string pitch data available in the control station, and the pitch control valves which cause the drill head to change its pitch angle with respect to the drill string are two steps away (Figure 10). These enable the driller to monitor and control drilling direction in the vertical plane.

The third primary control function concerns equipment safety. It is not good practice to operate the pumps with insufficient inlet pressure. Therefore, the water supply pressure is displayed at the driller's control station. When the driller observes the pressure falling down below the low limit, corrective action is taken.

IV. Rotation and Advance Assembly

The rotation and advance assembly (R&A) that reduces to practice the operation made feasible by the water jet drill. It receives the drilling head and drill string at the bottom of the vertical wellbore,

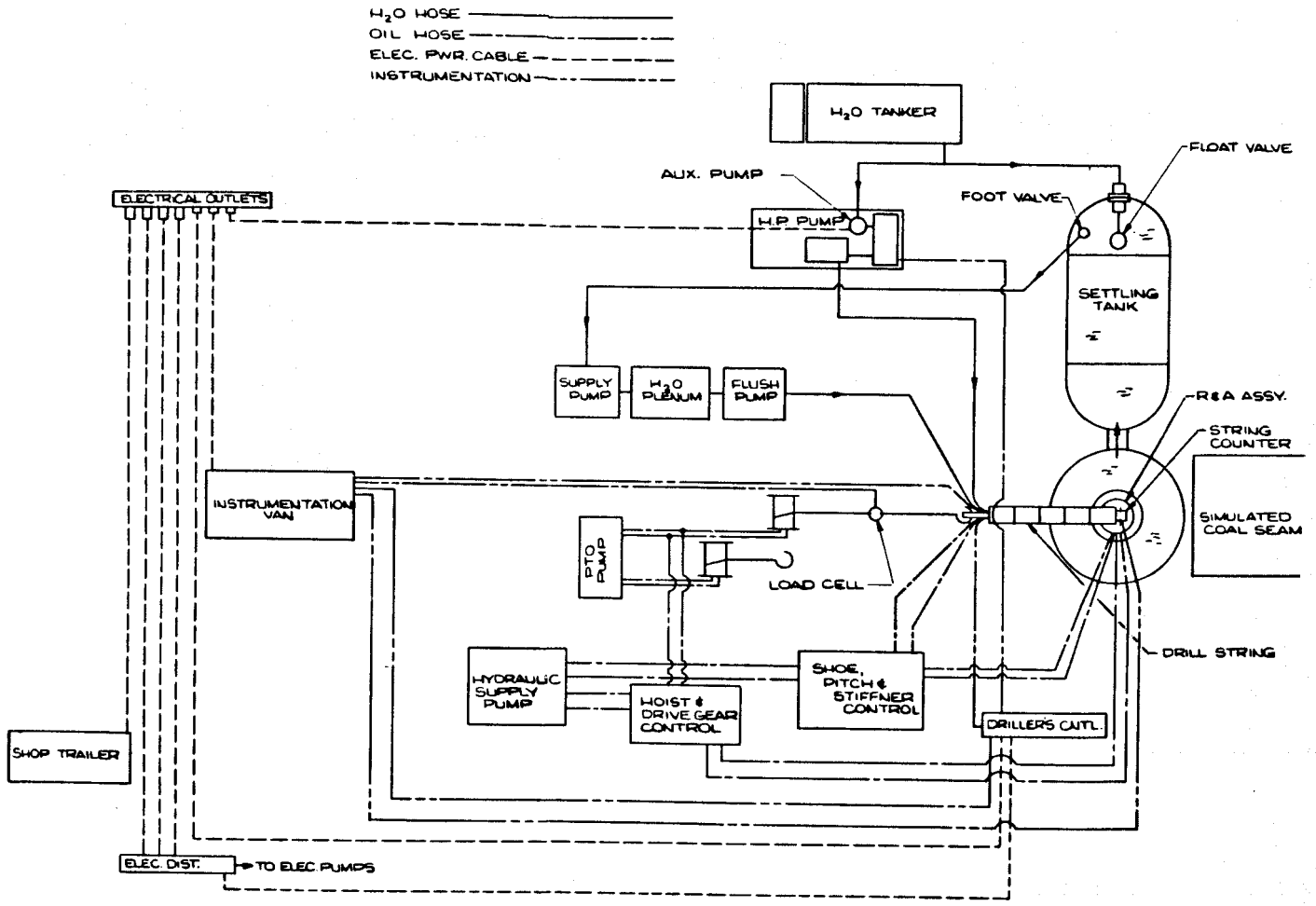

FIGURE 10

Water Jet Drill Equipment/Functional Diagram

rotates them to horizontal, and advances them into the coal seam as drilling proceeds (Figure 3). The R&A also includes the inlet to the pump which lifts water and coal cuttings to the surface. Components of the rotation and advance assembly or mechanism are discussed below. Most of the development to date has centered around a quarter-scale model built and studied at Sandia.

A. Cam

The rotation process is accomplished by a cam against which the bottom, or outboard, surfaces of the string boxes bear as the drill passes downhole (Figure 11). During withdrawal of the drill, the top, inboard surface of the boxes bear on rollers fixed to the rotation and advance assembly frame. The cam surface is a compound curve with radii of 9 inches at the inlet and outlet and a 24-inch radius between them. These dimensions, based upon a kinematic analysis by C. R. Barker at UMR, produce a 1:1 ratio of inlet to outlet drill string velocities. A single radius cam would produce a significant variation in horizontal drill string velocity with constant vertical drill string velocity because of the irregular action of the series of hinged boxes against the cam surface. Variation in horizontal velocity of the drilling head was unacceptable because of the effect on hole diameter. All other parameters remaining constant, the diameter of the hole cut by the jets is an inverse function of the drill head advance velocity.

B. Shoe

The cam is in two parts, one fixed to the rotation and advance assembly and one in the shoe (Figure 11). The shoe is pinned to the frame such that it can be rotated from the vertical to the horizontal position after the rotation and advance assembly is positioned in the maneuvering space (Figure 3). The diameter of the space is that required to provide clearance for the rotating shoe; a 5- to 6-foot sphere is sufficient. The shoe is rotated by a hydraulic cylinder pressurized through valves on the surface. Accelerometers are mounted on the shoe to align the cam and shoe surfaces. This allows the rotation and advance assembly to be aligned without visual inspection, which will be required for downhole operation.

The lateral force to "bend" the drill string is that required to overcome the stiffness of the hoses and cables within it. For initial passage of the drill head around the corner, the weight (15 lbs/ft) of the vertical drill string provides the force. After the head meshes with the drive gear, the gear supplements the weight effect.

C. Drive Gear

The drive gear is located at the exit end of the shoe (Figure 11). It is powered through a set of roller chains and a speed reducer by a hydraulic motor in the upper level of the rotation and advance

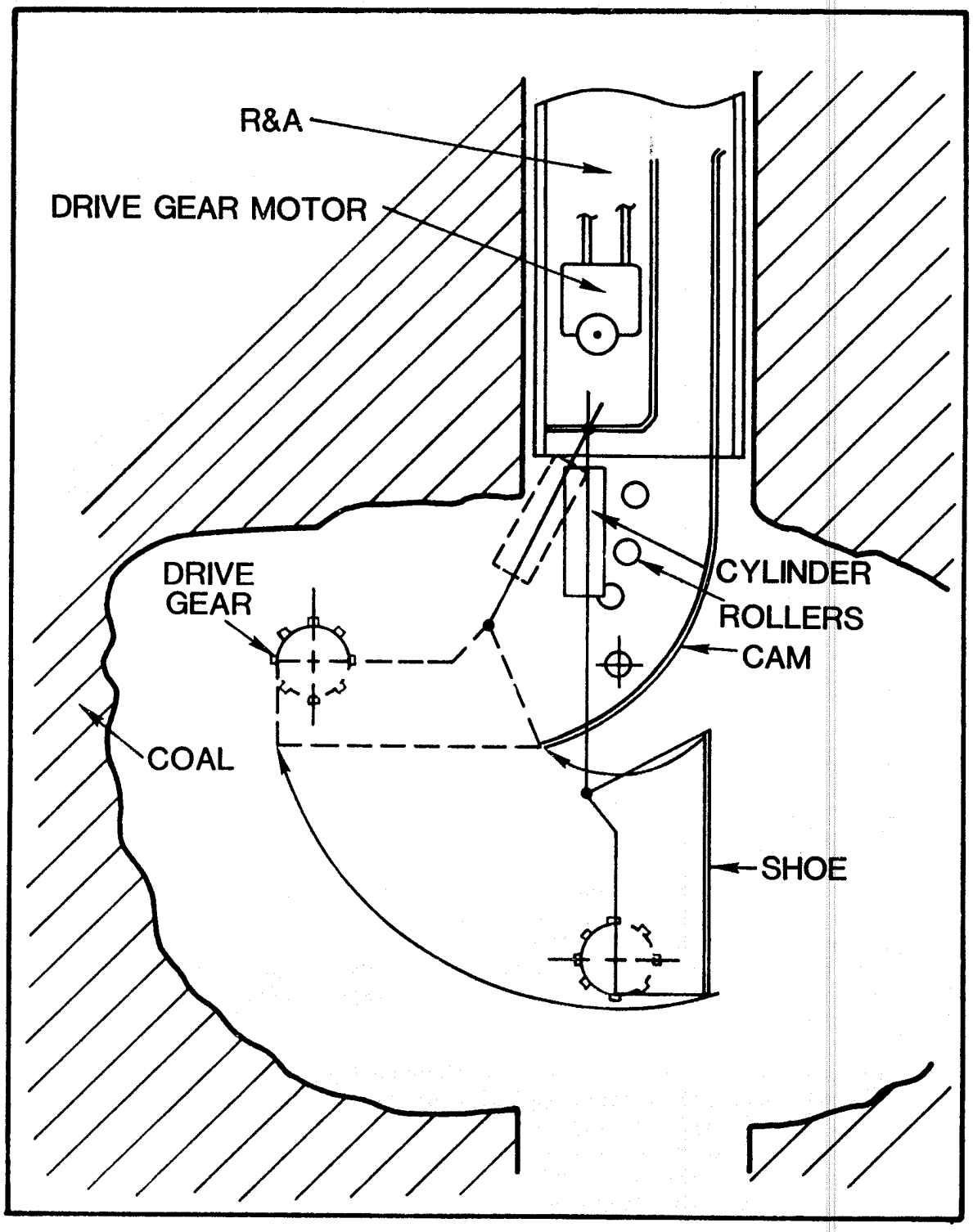

FIGURE 11

The Rotation and Advance Assembly

assembly. Control of the torque and drive gear/box action is discussed in the sections on Control and the Drill String.

Engaging the drive gear and drill head requires some careful maneuvering. The arrival of the drill head at the rotation and advance assembly and its rotation around the cam can be observed on the $P_H - P_S$ pitch meter. As the drill head slowly approaches the rotating drive gear, one pair of pins strikes a sync bar machined into the top of the drill head. The bar forces the drive gear to assume the speed of the drill head and to place the next set of pins in the first set of spaced pin pockets. Proper engagement is confirmed on both the $P_H - P_S$ meter and on the drive gear pump pressure gage.

D. Sump Pump

The sump pump inlet is an appendage of the rotation and advance assembly (Figure 3). It is supported on two 1/2-inch pipes which pass through the rotation and advance assembly and pumps water and chips from the sump to the surface. It employs a jet pump which can take in solids up to 1-inch cube. Larger particles washed into the sump are reduced in size by a crusher which is part of the pump. The technology for removing slurry from holes has been developed by Flow Industries in Kent, Washington, as a part of their borehole mining research.

E. Failure Analysis

It is important to consider the possible failure modes of the drive gear and shoe functions. If the drive gear locks up when its power train fails, neither the drill string nor the rotation and advance assembly can be removed from the hole. To avoid loss of equipment the key between the drive gear shaft and the sprocket is designed to shear before other drive train elements fail. The hydraulic power circuit for the shoe rotation cylinder is designed with a large safety margin to prevent loss of shoe control. Also, if an accumulation of chips in the sump prevents rotation of the shoe down to vertical for complete water jet drill system removal, the rotation and advance assembly can be raised sufficiently to clear the shoe of the interference.

Hoisting the drill string uphole through the rotation and advance assembly presents another set of problems. For example, the reactions between rollers (see Figure 11) and boxes are such that at certain positions in transit a hoisting force of 3 lbs is required to produce a force of 2 lbs on the horizontal section of the drill string. Also, the loads on the hinges can be 1 1/2-times the hoisting load. The hinge load is a function of roller location. The rollers are positioned to contact the boxes as far as possible from the hinges in order to minimize that force.

The design analysis shows that the rotation and advance assembly can safely support a 6,700-lb hoisting force. That force can

generate as much as 17,000 lbs against a roller and as little as 4,300 lbs on the horizontal drill string. Recall that the drive gear can add at least 1,500 lbs to that "extraction" force. Therefore, the driller has 6,000 lbs of force with which to extract a drilling head locked in place by a cave-in or lost circulation.

During the field tests of the drill, no cave-ins were experienced. However, loss of circulation was simulated by shutting off the high-pressure and flush-water flows. The drill string was in a 40-foot hole and could not be moved with the drive gear. The conclusion was that loss of circulation, which permits the fine coal particles to pack around the drill string, is a serious problem for the drill.

V. Surface Equipment

The surface equipment shown in Figure 12 provides all the power, control, and data and material handling facilities necessary to operate the drill. Not shown are the fuel, water, manpower, and underreamer.

A. Underreamer

Discussion of the surface equipment components will begin with the underreamer, as underreaming, is the first operation at the drill site after the vertical hole is drilled and cased by conventional methods. The objective of the underreaming task is to mill out a 5- to 6-foot diameter maneuvering space for the rotation and advance assembly shoe. The underreamer, developed by Flow Industries, is essentially a tee on a pipe which rotates, translates axially, and directs high-pressure jets against the walls of the vertical hole, carving out the desired cavity (7). The slurry is pumped to the surface by a sump pump similar to the one on the R&A assembly. Water power for the underreamer and its sump pump will be supplied by the two water jet drill high-pressure pumps.

B. Wellhead Hardware

The vertical drilling operation should leave a flanged 16-inch casing at the wellhead. The water jet drill equipment includes all the hardware required to lower the rotation and advance assembly into place, slips to hold the sump pump pipes, and slips to lock the drill string while sections are being added or removed. Figure 13 identifies the components. One feature not shown, but which can be added, is a vent connection in case methane gas concentrations become a problem during drilling.

C. Drilling Truck

The drilling truck can be a standard vehicle with a 30-foot mast capable of holding 5 tons, a 1-ton hoist, and deck space for the cornering water jet drill system equipment, which includes the driller's control station, the shoe and pitch control unit, the light pumps, the drive gear power unit, and the drill hoist.

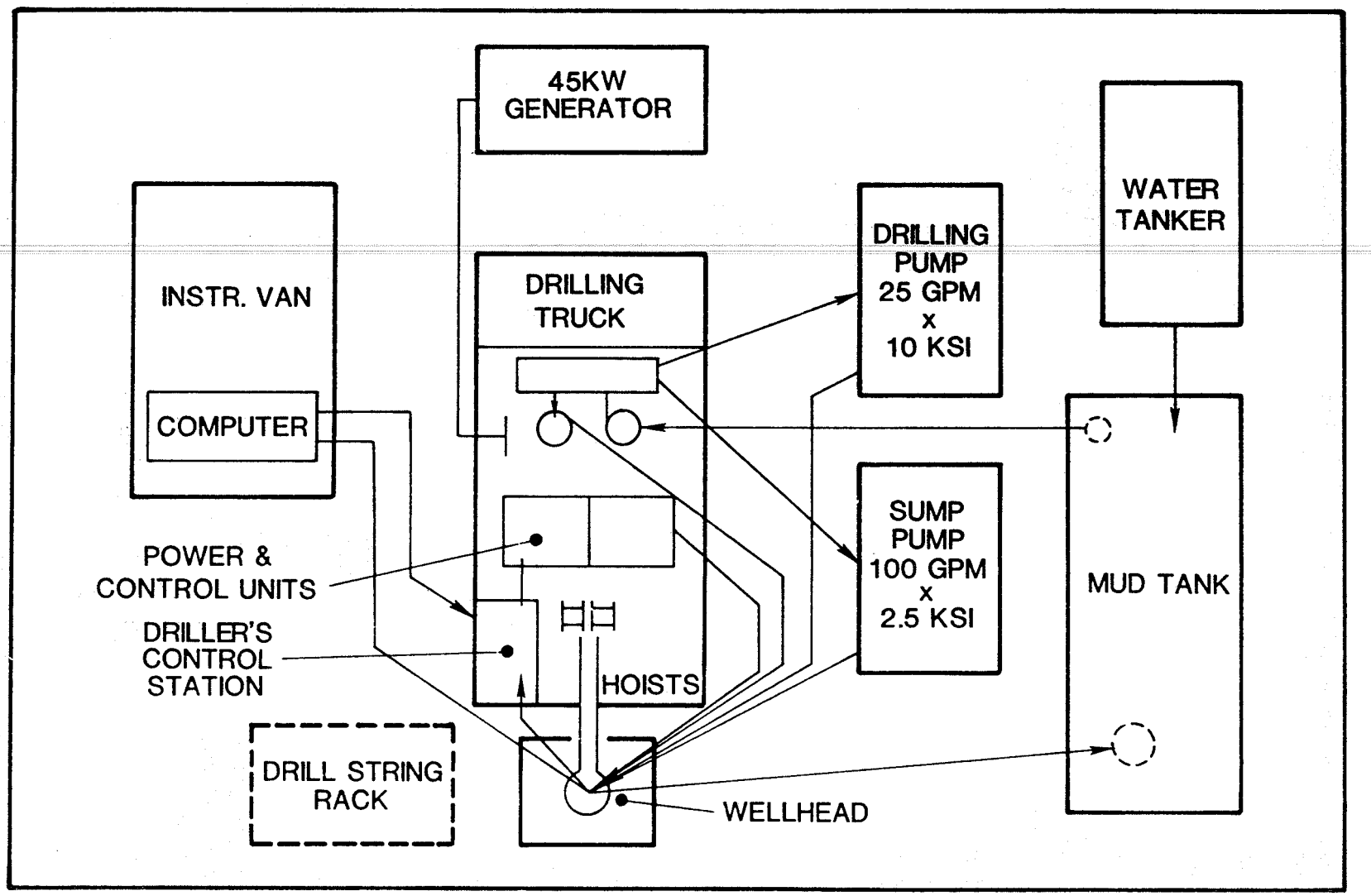

FIGURE 12

Water Jet Drill Surface Equipment

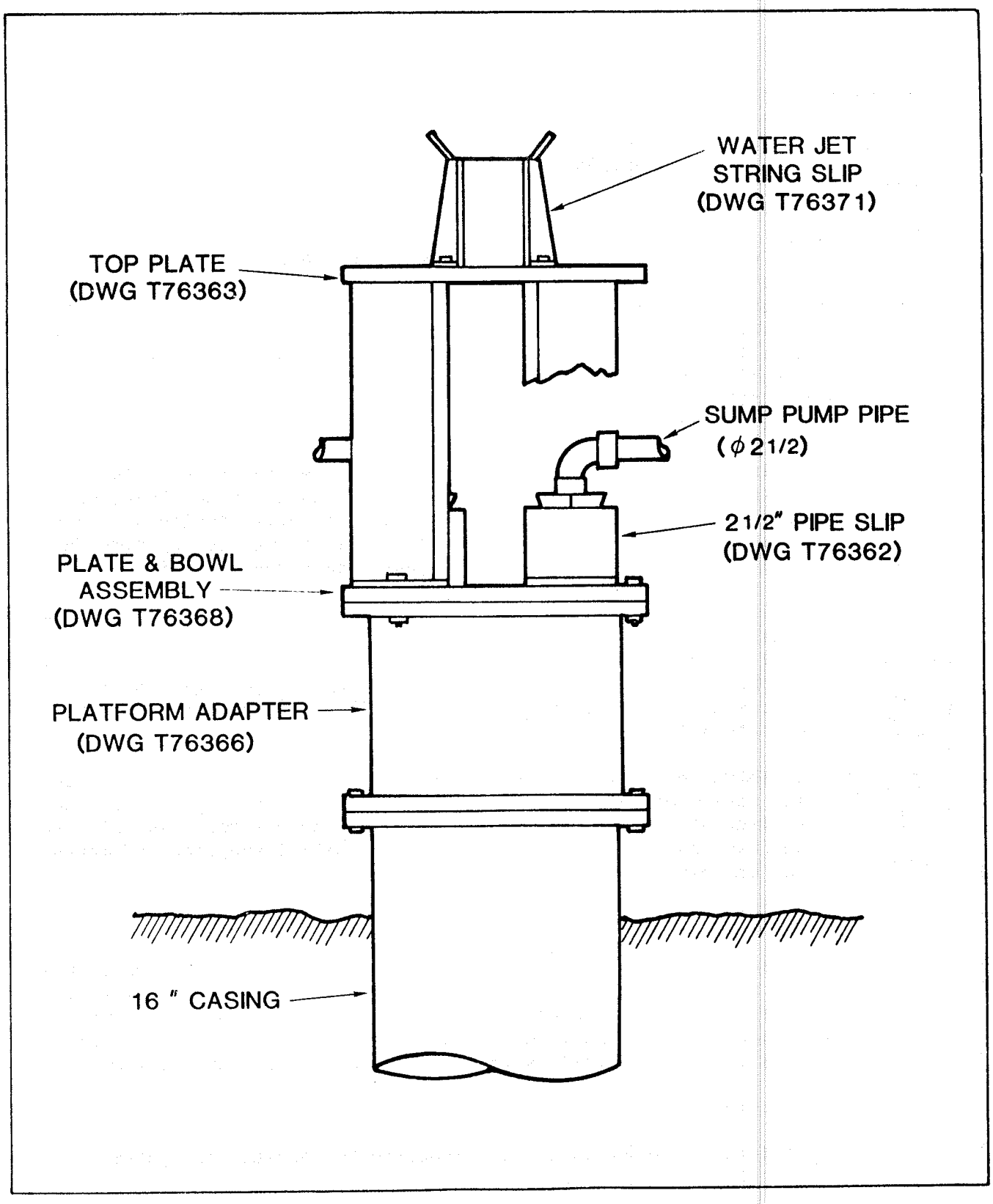

FIGURE 13

Water Jet Drill Wellhead Hardware

The drill hoist, it should be noted, is not a standard model. Special power and control features were required to permit operation at very slow and variable line speeds. The coordination of drill hoist and drive gear controls were discussed in the Rotation and Advance Assembly Section.

D. High-Pressure Pumps

The drilling head requires 25 gpm at 10,000 psi. The water is supplied by a triplex pump like the National Liquid Blasting Model 10150, which includes pump, engine, transmission, and relief valve. The sump pump requires an estimated 100 gpm at 2,500 psi to pump the slurry out of a 300-foot hole. This, too, will be supplied by diesel-driven pump or pumps.

E. Water Supply

During drilling, water is pumped downhole at the rate of 165 gpm. If that the hole is made at 1 ft/min, it is estimated that, on a good day, one can drill 20 minutes and add drill string 40 minutes of each hour. However, during the drill string adding time the sump (100 gpm) and the flush (40 gpm) pumps would continue to operate to keep the chips moving uphole. The sump pump inflow will be returned almost immediately to the surface and delivered to the mud tank. It is expected that part of the jet and flush water will be lost. Therefore, will be a maximum of 9,000 gallons of water pumped downhole in an hour and an minimum return of 8,000 gallons (all the sump and 2/3 of the flush and jet). This does not appear to be an unreasonable logistic burden.

As shown in Figure 12, the water from downhole is dumped into the mud tank where the chips settle out. The water supply pump then recirculates the water from the tank, through screens and filters, and back into the drilling circuits. Initial supplies and makeup can be delivered by tanker.

F. Power

In addition to the diesel engines on the high-pressure pumps, power for the drill is supplied by a 45-kW diesel electric generator. Power for the instrumentation is supplied by a 115 VAC generator attached to the instrumentation vehicle. Commercial power, if available at the drill site, can be plugged into the system.

G. Manpower

At least three operators are required to operate the system:

- The driller.
- The data technician.
- The high-pressure pump and power person.

The driller is in charge. He operates at the driller's control station and decides when to drill and when to stop.

The data technician operates the computer in the instrumentation vehicle. He enters string box numbers as drilling proceeds, determines that appropriate data is being displayed, and advises the drilled on instrumentation readiness.

The high-pressure pump and power person attends the high-pressure pumps during drilling and monitors other pumps, pressure gages, and the generators. He advises the driller on power readiness and is prepared to shut down the high-pressure pumps in case of emergency.

H. Safety

The water jet drill system presents three notable hazards in operating personnel. Two are obvious and one is not so obvious.

The first hazard is high-pressure. The main danger is not from broken hoses which quickly dump the stored energy but from small leaks which can produce lethal jets. In field operations, positive measures will be taken to protect high-pressure equipment from damage and personnel from high-pressure equipment.

The second hazard is electrical shock. Electricity and water can be a dangerous mixture in field operations. Proper grounding of all equipment is essential.

The drill string warrants special attention as the third hazard. The hinged joint between boxes can function as very powerful shears. It can do to the fingers of unwary drill string handlers what it has done to data cables.

Finally, the potential problem with methane has been mentioned earlier. Methane is flammable and certain air/methane mixtures are explosive. During any operation involving communication with underground coal, a methane detector will be used to ascertain that no hazard is present.

SUMMARY AND CONCLUSIONS

As of this report, work on the water jet drilling project has produced a complete set of drawings and specifications of a system that should meet the project objectives. The major components of the system have been tested in the field or modeled in the lab. The next step is to assemble and field test the components as a system. That operation will confirm or alter the certain conclusions made now about the capabilities and limitations of the water jet drill.

I. Capabilities

Based on the laboratory and field test results, the drilling head and string, as presently configured, can make holes 6 to 8 inches in diameter 100 feet horizontally in moderately clean coal at a rate of 2 ft/min. If the hole is level or slopes upward slightly, the chip flushing system will remove the chips from the hole. The instrumentation system will provide directional guidance information to the driller and a record of hole location. And finally, the string drive mechanism can move the drill string in and out of a 100-foot horizontal hole.

Based on laboratory experiments, it is believed that the drill head can drill in a down-sloping hole, i.e., under water, but at a reduced advance rate. The rotation and advance assembly model demonstrates that passing the drill string around the corner from vertical to horizontal is feasible. The rotation and advance assembly has operated successfully in the laboratory tests at Albuquerque and the ability to drill truly horizontal holes has also improved (hole deviation upward was reduced to approximately 1.5 percent). However, the critical tests will be in the planned field experiments during the spring and summer of 1983, near Gallup, New Mexico. These tests are planned to demonstrate the ability of the system to drill into a high wall and from a vertical wellbore.

When these capabilities have been demonstrated, it is believed that the water jet drill system described herein can be utilized to link vertical wells for underground coal gasification. The next step is to overcome the problems associated with the deeper coals in methane drainage.

II. Limitations

There are circumstances which may produce limitations for the water jet drill.

The most obvious is hole collapse or cave in. If the force required to pull the drill head through the collapsed area exceeds the force available at the rotation and advance assembly, the drill string and rotation and advance assembly will be lost in the hole. There are few reports of hole collapse during horizontal drilling in coal with conventional rotary bits described in the literature. However, hole collapse is not as serious in rotary drilling as it is for the water jet drill system and not all cases may have been noted. Therefore, no verifiable estimate of collapse probability can be made.

Loss of circulation may also be a terminal event. It is possible, however, that circulation could be restored by pumping lost circulation down the flush water line as rotary drillers do.

There is also a practical limitation in jet cutting efficiency. Jets cut coal easily, but they cut shale and pyrite balls more slowly. The nozzle arrangement on the present drill can undoubtedly be rearranged to improve its ability to cut the impurities commonly found in coal but extensive deposits of hard material will always create problems for the drill.

There is a limit beyond which one cannot push even the stiffest rope. We know that limit to be more than 100 feet for the water jet drill string but additional work is needed to determine what it is. At some point the drill string will bend or buckle against the wall of the horizontal hole, greatly increasing the force required to advance it. This limitation suggests the need for a downhole wall-reacting motive device if long holes, such as those required for methane drainage, are desired.

III. Uncertainties

Inbetween the capabilities and the limitations, there are some unknown but accessable characteristics of the system. Answers to these questions should be pursued in future work:

- Can the chips be removed from a down-sloping hole?
- What is the effect of formation pressures on drilling efficiency and hole stability?
- Can the drill be made to change downward direction?
- Is the directional control available in the drill sufficient to cope with pitching seams?

From these limitations and uncertainties, it may be concluded that substantial additional development work is required to qualify the drill for long holes in deep coal.

REFERENCES

1 Byrer, C. W., R. E. Malone, and A. E. Hunt, Preliminary Resource Assessment of Coalbed Methane in the United States, U.S. Department of Energy, SPE/DOE 10799 (1982).

2 Breitstein, L., Status of Water Jet Drilling Research and Development Prepared for Oil, Gas, and Shale Technology, U.S. Department of Energy, by Boorz, Allen, and Hamilton, Contract No. ET-78-C-01-2628, 82 pp. (1980).

3 Summers, D. A., and T. F. Lehnhoff, The Design of a Water Jet Drill for Development of Geothermal Resources, DOE Contract No. EY-76-SO2-2677.M003, 57 pp. (1978).

4 Summers, D. A., C. R. Barker, and H. D. Keith, Water Jet Drilling for In Situ Gasification of Coal, Final Report to Sandia Labs, Contract No. 13-0214, 54 pp (1978).

5 Keith, H. D., and C. R. Barker, Design and Development of a Mechanical Drive System for Drilling Horizontal Holes in Coal from a Vertical Borehole, Presented at the Sixth Annual Applied Mechanisms Conference, October 1-3, in Denver, CO, 6 pp. (1979).

6 Shoemaker, H. D., and K. M. Timmerman, Drilling Right-Angle Drainage Holes in Coal Utilizing Water Jets, Presented at the ASME Petroleum Division Meeting, March 7-10, in New Orleans, LA, Preprint 82-PET-14, 6 pp. (1982).

7 Cheung, J. B., et al., Application of a Hydraulic Borehole Mining Apparatus to the Remote Extraction of Coal, Interim Report, September 1976 to August 1978, Flow Industries, Inc., Report No. 121 (1978).

☆U.S. GOVERNMENT PRINTING OFFICE: 1983-646-069/788