Report of Investigations 7673

Performance Characteristics of Coal-Washing Equipment: Dense-Medium Cyclones

By A. W. Deurbrouck and J. Hudy, Jr.
Pittsburgh Energy Research Center, Pittsburgh, Pa.

UNITED STATES DEPARTMENT OF THE INTERIOR
Rogers C. B. Morton, Secretary

BUREAU OF MINES
Elburt F. Osborn, Director

This publication has been cataloged as follows:

Deurbrouck, Albert W

Performance characteristics of coal-washing equipment: dense-medium cyclones, by A. W. Deurbrouck and J. Hudy, Jr. [Washington] U.S. Dept. of the Interior, Bureau of Mines [1972]

34 p. illus., tables. (U.S. Bureau of Mines. Report of investigations 7673)

1. Coal washing. I. Hudy, John, jt. auth. II. Title. (Series)

TN23.U7 no. 7673 622.06173

U.S. Dept. of the Int. Library

CONTENTS

	Page
Abstract	1
Introduction	1
Acknowledgments	2
Dense-medium cyclone	2
Flowsheet	3
Sampling and test procedure	4
Dense-medium cyclone feeds	5
Plant A	5
Plant B	5
Plant C	5
Plant D	5
Plant E	5
Plant F	5
Plant G	6
Operating conditions	6
Performance criteria	8
Dependent criteria	8
Independent criteria	8
Dense-medium cyclone performance	9
Conclusions	12
Appendix--Summary tables	14

ILLUSTRATIONS

1.	Simplified typical dense-medium cyclone flowsheet	3
2.	Range of probable error, error area, and imperfection factor by mean particle size for dense-medium cyclone separations	12
3.	Average distribution curves for dense-medium cyclone washers (operating plants and laboratory pilot plant)	13

TABLES

1.	Summary of operating conditions for dense-medium cyclone plants sampled	7
2.	Summary of performance data for the composite plus 28-mesh feeds to dense-medium cyclone units	10
3.	Distribution data by specific gravity difference for cleaning trials of dense-medium cyclone washers (operating plants and laboratory tests)	11
A-1.	Specific gravity analysis of the size fractions and composite feed to the dense-medium cyclone, plant A	14
A-2.	Specific gravity analysis of the size fractions and composite feed to the dense-medium cyclone, plant B	15
A-3.	Specific gravity analysis of the size fractions and composite feed to the dense-medium cyclone, plant C	17
A-4.	Specific gravity analysis of the size fractions and composite feed to the dense-medium cyclone, plant D	18

TABLES--Continued

Page

A-5. Specific gravity analysis of the size fractions and composite feed to the dense-medium cyclone, plant E..... 20
A-6. Specific gravity analysis of the size fractions and composite feed to the primary dense-medium cyclone, plant F..... 21
A-7. Specific gravity analysis of the size fractions and composite feed to the secondary dense-medium cyclone, plant F..... 23
A-8. Specific gravity analysis of the size fractions and composite feed to the dense-medium cyclone, plant G..... 25
A-9. Summary of the performance characteristics of the dense-medium cyclone washer, plant A..... 27
A-10. Summary of the performance characteristics of the dense-medium cyclone washer, plant B..... 28
A-11. Summary of the performance characteristics of the dense-medium cyclone washer, plant C..... 29
A-12. Summary of the performance characteristics of the dense-medium cyclone washer, plant D..... 30
A-13. Summary of the performance characteristics of the dense-medium cyclone washer, plant E..... 31
A-14. Summary of the performance characteristics of the primary dense-medium cyclone washer, plant F..... 32
A-15. Summary of the performance characteristics of the secondary dense-medium cyclone washer, plant F..... 33
A-16. Summary of the performance characteristics of the dense-medium cyclone washer, plant G..... 34

PERFORMANCE CHARACTERISTICS OF COAL-WASHING EQUIPMENT: DENSE-MEDIUM CYCLONES

by

A. W. Deurbrouck[1] and J. Hudy, Jr.[2]

ABSTRACT

The separations achieved by eight conventional cyclone washers have been evaluated to determine their performance when processing intermediate size coal of 28 mesh bottom size.

The dense-medium cyclones provided efficient, sharp separations in treating feeds of up to 44 percent of near-gravity material at separating specific gravities ranging from 1.42 to 1.55 (one separation of a secondary feed was made at 1.63).

Complete washability analyses are shown by sizes of the composite feed to these cyclones. The magnetite losses per ton of coal processed ranged from 0.6 to 2.0 pounds; however, of the eight plants reporting losses, seven indicated magnetite losses were 1.1 pounds or less per ton of coal processed.

INTRODUCTION

The profitable operation of a coal preparation plant under today's stringent product standards and ever-rising labor and equipment costs requires that the preparation engineer continually strive for maximum recovery of salable coal. Good performance data are a prerequisite to the design of a new plant or to the expansion of existing facilities, and they serve as a yardstick with which the engineer may measure the performance of his plant. Having such data and a washability analysis of the raw coal enables the preparation engineer to make a rational choice of washing equipment.

This report is the fourth Bureau of Mines study in a series that will provide performance data on the principal types of coal-washing equipment.

---

[1]Research supervisor.
[2]Mining engineer (now with Health and Safety, Pittsburgh Technical Support Center).

Reports have been published on studies of wet concentrating tables,[3] sand cones,[4] and dense-medium vessels.[5]

The dense-medium cyclone coal-washing device was developed in the Netherlands and first described by Driessen[6] in 1945. Although it gained quick acceptance in Europe, the first installation made in the United States did not take place until 1958 at the Jeddo Highland Coal Co. As of July 1969, however, over 10,000 tons per hour of feed were treated in dense-medium cyclones in the United States. Dense-medium cyclones are said to provide sharp separations and exceptional operating flexibility.

ACKNOWLEDGMENTS

The authors appreciate the cooperation of the coal mine operators who granted permission to sample their preparation plants and to publish the tests results. The continuing encouragement, support, and cooperation of the members of the Preparation Subcommittee of the American Mining Congress is gratefully acknowledged.

DENSE-MEDIUM CYCLONE

The cyclone coal-washer is a cylindroconical unit with an included angle of approximately 20°. The raw feed and medium are introduced tangentially into the cylindrical section of the unit where a vortex is created with a central air-core due to the rotational force induced. Heavy impurities move down the conical section wall and out the cyclone apex. The low-density material moves to the central air core and out the top of the cyclone through the vortex finder.

The cyclone is usually mounted about 10° from the horizontal to allow for medium drainage when the vessel is not in operation.

The dense-medium cyclone utilizes a mixture of finely ground magnetite suspended in water as a medium to effect a separation between coal and its associated impurities in a centrifugal field. There has been some interest in using other suspended solids as medium, but in the United States magnetite is used exclusively.

Because of the difficulty of reclaiming magnetite from very fine size coal, the bottom size treated in dense-medium cyclones is about 35 mesh

---

[3]Deurbrouck, A. W., and E. R. Palowitch. Performance Characteristics of Coal-Washing Equipment: Concentrating Tables. BuMines Rept. of Inv. 6239, 1963, 26 pp.

[4]Deurbrouck, A. W., and J. Hudy, Jr. Performance Characteristics of Coal-Washing Equipment: Sand Cones. BuMines Rept. of Inv. 6606, 1965, 26 pp.

[5]Hudy, J.,Jr. Performance Characteristics of Coal-Washing Equipment: Dense-Medium Coarse-Coal Vessels. BuMines Rept. of Inv. 7154, July 1968, 29 pp.

[6]Driessen, M. G. The Use of Centrifugal Force for Cleaning Fine Coal and Heavy Liquids and Suspensions With Special Reference to the Cyclone Washer. J. Inst. Fuel, v. 19, 1945, pp. 33-45.

(1/2 mm). If magnetite losses could be reduced, the inherent attractiveness of extending the bottom size range of dense-medium cyclone feed to 65 mesh (1/4 mm) or even 100 mesh (150μ) could be realized.

Flowsheet

In a typical dense-medium cyclone circuit (fig. 1) the top size of coal fed to the cyclone may be as coarse as 1-1/2 inches, but more commonly is approximately 1/2 to 1/4 inch. The bottom size of approximately 35 mesh (1/2 mm) is obtained by screening on a sieve bend, followed by a vibrating screen. The sized feed is now mixed in a head tank with a medium of the

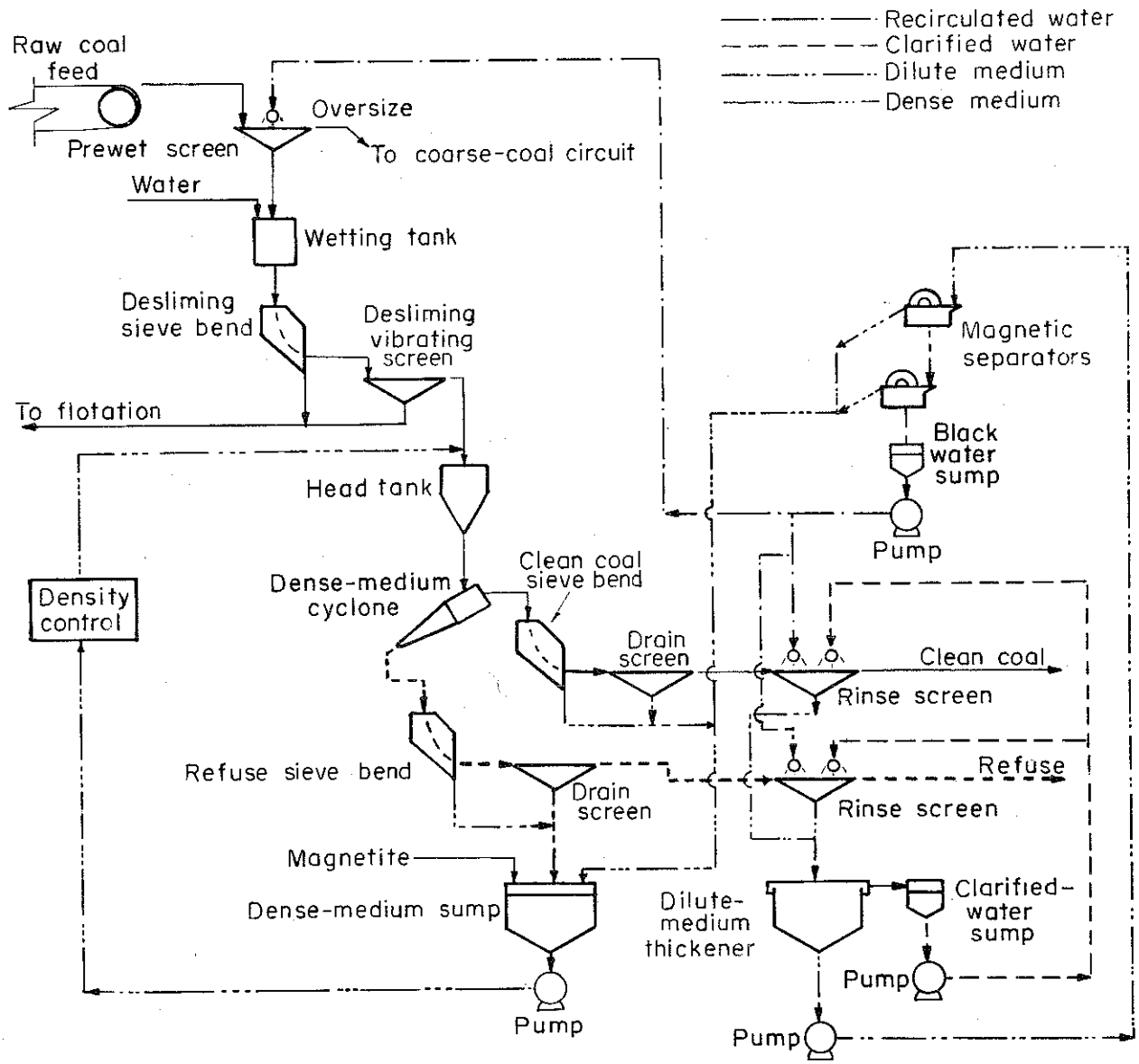

FIGURE 1. - Simplified Typical Dense-Medium Cyclone Flowsheet.

desired density. The raw coal and magnetite feed slurry now flow by gravity to the cyclone where two products are made, an overflow (or clean coal product) and an underflow (or refuse product). When a middlings product is desired, the cyclone underflow is re-treated in a secondary cyclone, or some other suitable washer. The cyclone products flow from the washer onto sieve bends and drain-and-rinse screens. The dense-medium drains directly from the sieve bends and the first portion of the drain-and-rinse screens into the magnetite sump. The products are rinsed on the second portion of the drain-and-rinse screens to reclaim any magnetite remaining with the coal or refuse. This dilute medium, rinsed through the screen, usually contains a large portion of nonmagnetic material. This material flows to a magnetic separator where the magnetic material is recovered, concentrated, and then circulated to the medium sump; the magnetic separator rejects the nonmagnetic material as a tailing product. An excessive buildup of nonmagnetic particles in the circulating medium will lead to an increase in medium viscosity and will result in operating difficulties and impaired washing performance. Many variations of this basic circuit have been installed in commercial plants.

Magnetite losses are a direct cost against coal washing. If the finer sizes of the magnetite are preferentially lost from the medium, the sharpness-of-separation attainable using the cyclone deteriorates. Generally, magnetite losses can be minimized by eliminating fine-size material (minus 35 mesh) from the cyclone feed.

SAMPLING AND TEST PROCEDURE

Samples of the cyclone washer feeds and products were collected in commercial plants. The sample top sizes ranged from 3/4 to 1/4 inch; the bottom size was always 35 mesh. Only well operated plants with adequate sizing screens and drain-and-rinse screens were selected.

The gross samples of each product weighed at least 600 pounds and were made up of 60 incremental samples of 10 pounds or more. The samples were collected over a 4- to 6-hour period of normal plant operation, placed in plastic-lined 55-gallon steel drums, and shipped to the laboratory for processing.

In the laboratory the samples were air-dried, weighed, and then sized at 1/2, 3/8, and 1/4 inch and 8, 14, and 28 Tyler-mesh. The 28-mesh bottom size was selected so that the performance data generated would be consistent with previously completed equipment studies.

After sizing, the clean coal and refuse products were float-sink tested in organic liquids of various specific gravities ranging from 1.28 to 1.80, depending upon the assumed specific gravity of separation of the sample.

The size fractions of the feed product, the incremental float-sink fractions of the clean coal and refuse products, plus the minus 28-mesh fractions of the feed, clean coal, and refuse products were sent to the analytical laboratory for chemical analyses.

DENSE-MEDIUM CYCLONE FEEDS

The specific gravity compositions and ash contents of the size fractions of the various feed samples were quite constant for four of the seven raw coals.

Plant A

Plant A, located in north central West Virginia, washes approximately 150 tons per hour of Redstone bed coal. The specific gravity analysis of the cyclone feed is given in table A-1.

Plant B

Plant B, located in eastern Kentucky, washes approximately 450 tons per hour of Elkhorn bed coal. The specific gravity analysis of the cyclone feed is given in table A-2.

Plant C

Plant C, located in western Pennsylvania, washes approximately 320 tons per hour of Lower Kittanning bed coal. The specific gravity analysis of the cyclone feed is given in table A-3.

Plant D

Plant D, located in southern Illinois, washes approximately 1,000 tons per hour of Illinois No. 6 bed coal. The specific gravity analysis of the cyclone feed is given in table A-4.

Plant E

Plant E, located in southern West Virginia, washes approximately 375 tons per hour of Sewell bed coal. The specific gravity analysis of the cyclone feed is given in table A-5. There is a significant increase in the lightest specific gravity material in the finer size fractions accompanied by a decrease in the sink 1.80-specific-gravity material, indicating that the coal is more friable than the associated impurities.

Plant F

Plant F, located in southern West Virginia, washes approximately 360 tons per hour of Pocahontas No. 3 bed coal.

The feed to the primary cyclone is 3/4-inch by 28-mesh size coal. As shown in table A-6, the ash and specific gravity analysis vary considerably by size fraction. The ash content decreases, and the float 1.35-specific-gravity material increases as the size consist decreases.

The feed to the secondary cyclone (table A-7) is the underflow product from the primary cyclones.

Plant G

Plant G, located in southern West Virginia, washes approximately 400 tons per hour of Pocahontas No. 3 bed coal. The feed to the dense-medium cyclone is air-table-reject. This accounts for the small percentage of float 1.35-specific-gravity material in the washer feed and the disproportionately high percentage of sink 1.80-specific-gravity material as shown in table A-8.

OPERATING CONDITIONS

The operating conditions for the various dense-medium cyclones sampled during this study are summarized in table 1. The unit feed rates (in tons per hour) show great variations for both the 20- and 24-inch cyclones; however, the effect of these variations on cyclone performance is not discernible. In a laboratory performance study of dense-medium cyclones Geer[7] noted the feed rate to cyclones was not critical to performance. Although a medium-to-coal ratio of 5 to 1, or less, is normal, a 10-to-1 ratio did not produce noticeably different results.

There were also wide variations in feed, underflow, and overflow orifice sizes. Generally orifices were larger than recommendations, which are as follows:

Cylinder diameter	=	D
Feed.....	=	0.20 D
Underflow.....	=	.32 D
Overflow.....	=	.40 D

The variations from the recommended orifice sizes did not appear to affect the cyclone performance.

The magnetite losses were generally quite low; only one plant reported magnetite losses greater than 1.1 pounds per ton of cyclone feed. The low magnetite losses are the result of good preparation practices, including minimizing undersize coal in the cyclone feed, use of adequate drain-and-rinse facilities, and a well-designed magnetite-reclaiming circuit.

Four of the seven operators used magnetite ground to 90 percent minus 325 mesh for dense-medium cycloning; the remaining three used finer ground magnetite containing 96 to 99 percent minus 325 mesh. When the finer ground magnetite was used, the losses per ton of feed were generally somewhat higher. This would be expected since the difficulty of reclaiming magnetite, all other things being equal, will increase with a decrease in magnetite size consist.

---

[7] Geer, M. R., Michael Sokaski, P. Stanley Jacobsen, and H. F. Yancey. Performance of Dense-Medium Cyclone in Cleaning Fine Coal. BuMines Rept. of Inv. 5732, 1961, 22 pp.

TABLE 1. - Summary of operating conditions for dense-medium cyclone plants sampled

	Cyclone washer							
	Plant A	Plant B	Plant C	Plant D	Plant E	Plant G	Plant F	
Coalbed.....	Redstone	Elkhorn	Lower Kittanning	Illinois No. 6	Sewell	Pocahontas No. 3	Pocahontas No. 3	
Separation.....	Primary	Primary	Primary	Primary	Primary	Primary	Primary	Secondary
Size, inches:								
Cyclone diameter.....	20	24	20	24	20	20	24	24
Feed orifice.....	6	8	4	10	6	8	6	6
Underflow orifice.....	7-1/4	8-1/4	6-1/2	6	6-3/4	9-3/4	8-1/2	8-1/2
Overflow orifice.....	9	10	8	10	8	11	10	10
Feed rate per unit, tons per hour.....	37.5	38	38	75	55	66	55	43
Feed inlet pressure, pounds per square inch..	([1])	6	10	([1])	8	12	7	5
Specific gravity of circulating medium.....	1.38	1.32	1.42	1.27	1.32	1.35	1.34	1.52
Magnetite:								
Supplier.....	Foote	Foote	Mineral Mills	Foote	Viking	Foote	Foote	Foote
Grade.....	B	E	No. 1 Superfine	E	965;989	B	B	B
Estimated magnetite losses in pounds per ton of feed.....	0.6	0.9	0.8	1.0	2.0	1.1	0.7	0.7

[1]Gage pressure not available.

PERFORMANCE CRITERIA

The performance criteria used in this report are those in common usage; hence, only summary definitions are given. More complete definitions may be found in a publication by Yancey and Geer.[8] All performance criteria values are generally considered to be constant only for a given size consist, feed rate, and quality of operation.

Dependent Criteria

Performance criteria that depend both on the washing characteristics of the coal being treated and on the sharpness of the separation achieved by the washer are usually called dependent criteria, and include recovery efficiency, misplaced material, and ash error.

Recovery efficiency is defined as the ratio, expressed in percentage, of the yield of washed coal to the yield of float coal of the same ash content shown to be present in the feed by the specific gravity analysis.[9]

Total misplaced material is that percentage of the feed which reported to the wrong product. For sharp separations, the misplaced material is generally that material having specific gravity values close to the specific gravity of separation, and it thus correlates with the amount of near-gravity material.[10]

Near-gravity material is the percentage of material in the feed within ±0.10 specific gravity units from the specific gravity of the separation.

Ash error is closely related to recovery efficiency and is of practical importance because it indicates the difference between the ash content of the clean coal product and the theoretical ash from the washability data at the same yield.

Independent Criteria

Performance criteria that are characteristic of the washing unit and are substantially unaffected by the specific gravity composition of the raw coal are probable error, error area, and imperfection factor. They are commonly referred to as the sharpness-of-separation criteria.

Probable error is measured directly from the distribution curve. It is the slope of the distribution curve, and it equals one-half the specific gravity difference between the 25- and 75-percent ordinate values on the curve.

---

[8] Yancey, H. F., and M. R. Geer. Efficiency and Sharpness-of-Separation in Evaluating Coal-Washery Performance. Trans. AIME, v. 190, 1951, pp. 507-517.

[9] Yancey, H. F., and M. R. Geer. Performance of a Baum-Type Coal-Washing Jig. BuMines Rept. of Inv. 3371, 1938, 18 pp.

[10] Lyons, O. R. Comparative Effectiveness of Coal Cleaning Equipment. Trans. AIME, v. 193, 1952, pp. 895-902.

Error area, the area between the actual distribution curve and the theoretically perfect distribution curve, is a measure of the sharpness of the separation between clean coal and refuse. For a theoretically perfect separation, the error area is zero.

The sharpness-of-separation for most cleaning devices deteriorates with increasing specific gravity of separation. Recognizing this, Cerchar[11] (Centre d'Etudes et Recherches des Charbonnages de France) developed the imperfection factor, which, for jigs, tables, and other equipment using water as the separating medium, is equal to the probable error divided by the specific gravity of separation (from the distribution curve), minus the specific gravity of the separating medium. Later studies of the imperfection factor, as related to dense-medium vessels, indicate that a more constant imperfection-factor value may be obtained by dividing the probable error by the specific gravity of separation only. Imperfection factor thus, supposedly, corrects for the increase in probable error and results in a numerical figure that characterizes a particular cleaning device regardless of the separating density.

DENSE-MEDIUM CYCLONE PERFORMANCE

Eight dense-medium cyclone samples were collected in seven preparation plants. A summary of the performance data for the composite plus 28-mesh feeds to these cyclones is given in table 2.

The primary dense-medium cyclone separations were all quite sharp. The sharpness of the separation was equally good in the secondary dense-medium cyclone from plant F, where the cyclone feed was the reject product from the primary cyclone separation from plant F. The error area values for all the dense-medium cyclone tests ranged between 16 and 25, and the probable error values ranged between 0.023 and 0.034.

The near-gravity material in the cyclone feeds ranged from 2.7 to 43.6 percent, although five of the cyclones received a feed containing less than 10 percent of near-gravity material. The primary separation of plant F was made in the presence of 43.6 percent of the near-gravity material, yet the probable error was 0.023, the lowest of all tests. The total misplaced material was rather high, but this is the mathematical result of washing a coal containing a high percentage of near-separating-gravity material.

It is apparent the cyclone will provide a sharp separation even in the presence of large percentages of near-gravity material.

The complete performance data by size fractions are presented, for the eight cyclones sampled, in tables A-9 through A-16.

---

[11] Cheradame, R. J., P. L. R. Saint-Guilhem, and P. Belugou. Evaluating Preparation Results. Coal Age, v. 50, April 1950, pp. 80-83.

TABLE 2. - Summary of performance data for the composite plus 28-mesh feeds to dense-medium cyclone units

Plant	A	B	C	D	E	F		G
						Primary	Secondary	
Ash content, percent:								
Feed	13.2	10.8	19.2	17.1	13.9	18.0	60.1	25.5
Clean coal	5.8	4.5	6.0	5.6	3.5	4.1	16.0	3.8
Refuse	70.5	63.6	55.0	61.6	59.3	60.5	83.6	68.6
Actual recovery.....percent	88.6	89.4	73.0	79.5	81.3	75.3	34.7	66.5
Theoretical recovery.....do	88.8	89.4	73.2	80.7	81.7	76.2	34.9	68.6
Efficiency.....do	99.8	100.0	99.7	98.5	99.5	98.8	99.4	96.9
Ash error.....do	0.0	0.0	0.1	0.1	0.2	0.0	0.0	0.3
Float in refuse..percent of product	4.3	6.4	4.1	11.9	5.1	11.8	1.4	8.0
Sink in clean coal percent of product	0.4	0.6	1.6	1.6	0.8	2.0	3.6	1.4
Total misplaced material percent of feed	0.8	1.2	2.2	3.7	1.6	4.4	2.2	3.6
Near-gravity ±0.10 material percent of feed	2.7	6.8	8.7	31.2	8.3	43.6	8.6	12.6
Specific gravity of separation	1.55	1.51	1.53	1.42	1.48	1.42	1.63	1.45
Probable error, specific gravity	0.028	0.034	0.030	0.029	0.031	0.023	0.026	0.029
Imperfection	0.018	0.022	0.020	0.020	0.021	0.016	0.016	0.020
Error area	22	23	18	21	20	16	21	25

Generally, the cyclone separates the coarser size material in the feed more sharply and at a higher efficiency than the finer size material. The data also show that the coarser size material is separated at a lower specific gravity than the finer size material. The increase of the specific gravity of separation from coarse to fine size material is not as great as with water-only type washers (for example, tables, jigs, hydrocyclones); because the increase in separating specific gravity is small, there is not the usual increase in ash content of the clean coal with decrease in size, but rather a decrease in the ash content of the clean coal product. For the cyclones sampled, the 1/4-inch by 8-mesh size fraction typically represented the largest fraction by weight and generally, when analyzed, most closely resembled the total product in product quality and yield. The coarser material usually separated at a lower density, and although providing a higher ash product the recovery efficiencies were higher and the separations were sharper. Conversely, the material finer than 8 mesh separated less efficiently, less sharply, and at slightly higher densities.

Figure 2 shows the range of probable error, error area, and imperfection factor by mean particle size for the dense-medium cyclone separations. The figure shows that sharpness-of-separation criteria were nearly constant down to an average particle size of 0.171 inch. Below this average particle size, the tendency of performance to deteriorate was clearly indicated.

Shown in figure 3 are the dense-medium cyclone performance data collected in this study, compared with previously published Bureau of Mines dense-medium cyclone laboratory data;[12] the data are presented in tabular form in table 3. These laboratory data were collected under operating conditions that are approached

[12]Work cited in footnote 7.

but not equaled in actual plant operation; therefore, the laboratory data can be used as a yardstick with which to compare the results from industrial plants.

TABLE 3. - Distribution data by specific gravity difference for cleaning trials of dense-medium cyclone washers (operating plants and laboratory tests)

Specific gravity difference[1]	Dense-medium cyclone			
	Operating plant tests[2] (error area--21)		Laboratory tests[3] (error area--16)	
	Average	Standard deviation	Average	Standard deviation
-0.50	100.0	0.0	100.0	0.0
-.45	100.0	.0	100.0	.0
-.40	99.9	.4	100.0	.0
-.35	99.8	.5	100.0	.0
-.30	99.7	.5	100.0	.0
-.25	99.6	.6	100.0	.0
-.20	99.4	.6	100.0	.0
-.15	99.1	.7	99.8	.2
-.10	98.4	.7	99.1	.3
-.05	90.3	3.6	91.7	3.7
.00	50.0	-	50.0	-
+.05	13.9	3.8	7.4	4.1
+.10	6.0	1.3	1.7	1.1
+.15	2.8	.8	.6	.7
+.20	1.5	.8	.2	.4
+.25	.9	.7	.1	.3
+.30	.7	.6	.1	.2
+.35	.5	.5	.1	.2
+.40	.4	.4	.0	.0
+.45	.2	.3	.0	.0
+.50	.1	.2	.0	.0

[1]Difference between average specific gravity of fraction and specific gravity of separation.
[2]Specific gravity of separations ranged from 1.42 to 1.63; 8 tests.
[3]Specific gravity of separations ranged from 1.35 to 1.58; 14 tests.

The dense-medium-cyclone results from operating plants compare quite closely to the laboratory results. The recovery of float material and rejection of heavy impurity at the extremes was slightly impaired, as compared with the laboratory results. Overall, the plant separations were inferior as indicated by an average error area of 21, as compared to an error area of 16 for the laboratory separations. However, the closeness of the plant results to the laboratory results indicates the excellence of the present dense-medium cyclone results.

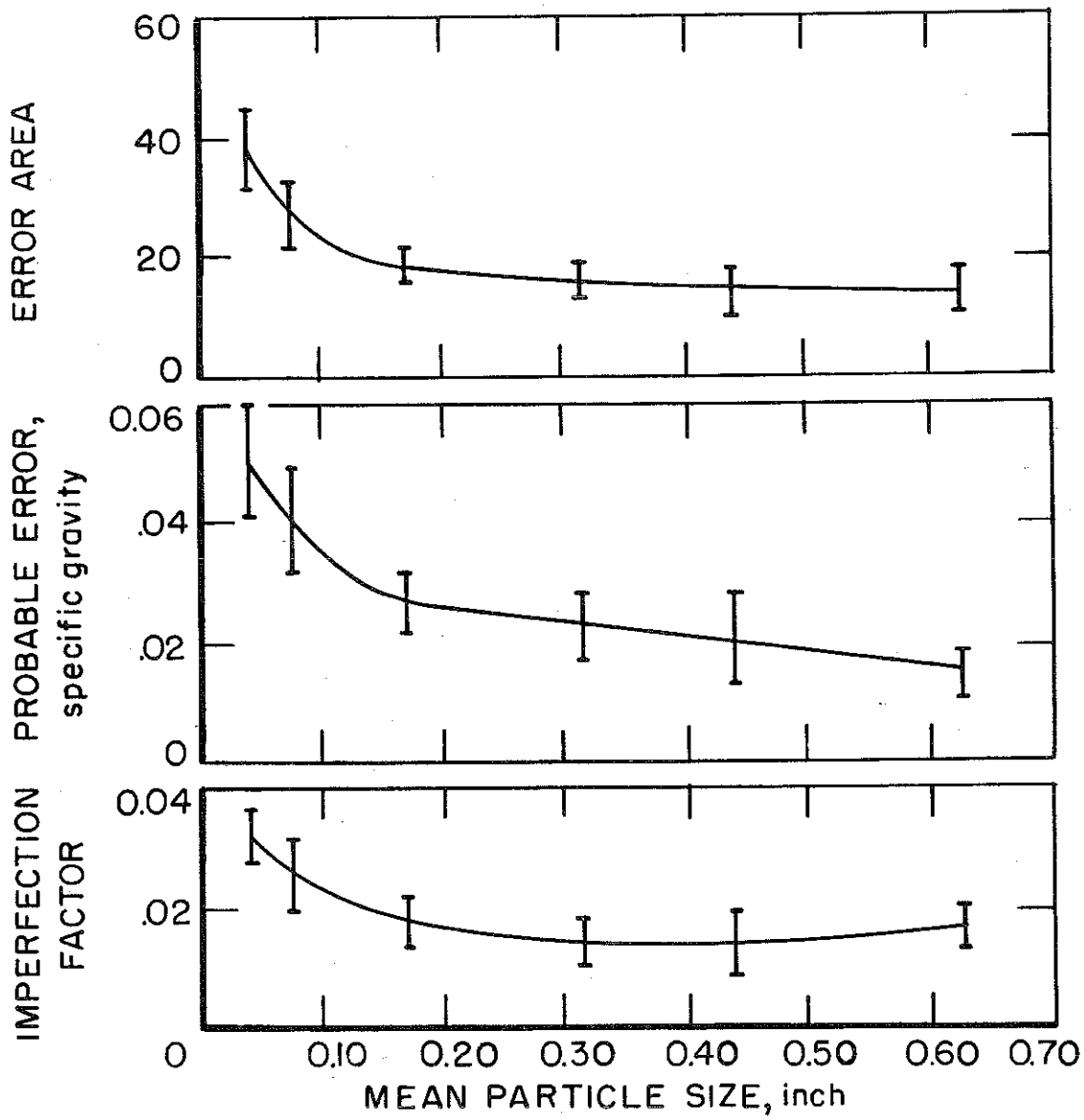

FIGURE 2. - Range of Probable Error, Error Area, and Imperfection Factor by Mean Particle Size for Dense-Medium Cyclone Separations.

CONCLUSIONS

The dense-medium cyclone has been shown to be an effective device for washing coal from 3/4 inch top size to 28 mesh bottom size. In this study the units sampled provided very sharp separations, typified by error area values ranging from 16 to 25 and probable error values ranging from 0.023 to 0.034. The sharpness of the separations was not affected by the percentage of near-gravity material present; however, the maximum percentage of near-gravity material present was only 44 percent. The feed rate to 20-inch cyclones ranged from 37 to 66 tons per hour with no noticeable affect on unit performance.

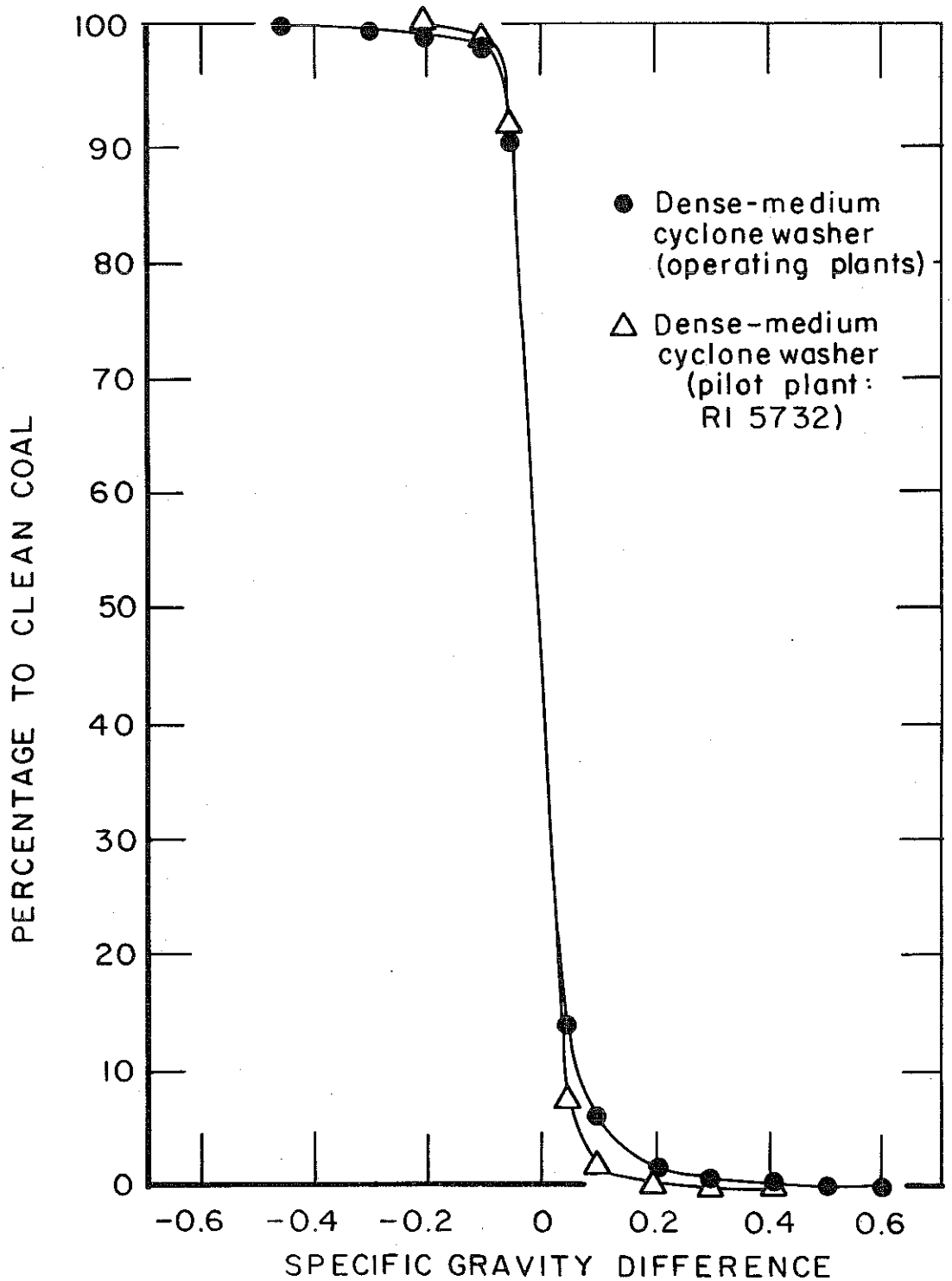

FIGURE 3. - Average Distribution Curves for Dense-Medium Cyclone Washers (Operating Plants and Laboratory Pilot Plant).

APPENDIX--SUMMARY TABLES

TABLE A-1. - Specific gravity analysis of the size fractions and composite feed to the dense-medium cyclone, plant A[1]

Size fraction and weight	Specific gravity	Direct, percent		Cumulative, percent	
		Weight	Ash	Weight	Ash
1/2 by 3/8 inch: 5.3 percent.....	Float-1.30	50.4	3.8	50.4	3.8
	1.30-1.35	25.3	7.7	75.7	5.1
	1.35-1.40	5.9	12.7	81.6	5.6
	1.40-1.45	2.2	16.8	83.8	5.9
	1.45-1.50	.9	20.9	84.7	6.1
	1.50-1.60	1.0	27.9	85.7	6.4
	1.60-1.70	.7	37.1	86.4	6.6
	1.70-1.80	.7	42.6	87.1	6.9
	1.80-Sink	12.9	81.9	100.0	16.6
3/8 by 1/4 inch: 25.1 percent.....	Float-1.30	49.3	3.5	49.3	3.5
	1.30-1.35	29.6	7.1	78.9	4.8
	1.35-1.40	6.4	12.1	85.3	5.4
	1.40-1.45	2.3	16.5	87.6	5.7
	1.45-1.50	1.2	20.1	88.8	5.9
	1.50-1.60	1.1	26.1	89.9	6.1
	1.60-1.70	.7	33.9	90.6	6.3
	1.70-1.80	.6	40.3	91.2	6.6
	1.80-Sink	8.8	80.7	100.0	13.1
1/4 inch by 8 mesh: 47.3 percent...	Float-1.30	53.7	3.5	53.7	3.5
	1.30-1.35	23.3	7.1	77.0	4.6
	1.35-1.40	8.3	11.1	85.3	5.2
	1.40-1.45	2.3	16.0	87.6	5.5
	1.45-1.50	1.2	20.0	88.8	5.7
	1.50-1.60	1.1	26.2	89.9	6.0
	1.60-1.70	.8	33.7	90.7	6.2
	1.70-1.80	.6	39.5	91.3	6.4
	1.80-Sink	8.7	78.9	100.0	12.7
8 by 14 mesh: 18.9 percent.....	Float-1.30	48.0	3.0	48.0	3.0
	1.30-1.35	25.8	6.4	73.8	4.2
	1.35-1.40	9.7	10.5	83.5	4.9
	1.40-1.45	2.5	15.7	86.0	5.2
	1.45-1.50	1.1	19.7	87.1	5.4
	1.50-1.60	1.2	25.1	88.3	5.7
	1.60-1.70	.9	33.0	89.2	6.0
	1.70-1.80	.6	38.8	89.8	6.2
	1.80-Sink	10.2	77.3	100.0	13.4

See footnote at end of table.

TABLE A-1.- Specific gravity analysis of the size fractions and composite feed to the dense-medium cyclone, plant A[1]--Continued

Size fraction and weight	Specific gravity	Direct, percent		Cumulative, percent	
		Weight	Ash	Weight	Ash
14 by 28 mesh: 3.4 percent.....	Float-1.30	53.6	2.9	53.6	2.9
	1.30-1.35	21.8	7.0	75.4	4.1
	1.35-1.40	6.3	11.7	81.7	4.7
	1.40-1.45	2.6	15.8	84.3	5.0
	1.45-1.50	1.3	19.2	85.6	5.2
	1.50-1.60	1.3	24.1	86.9	5.5
	1.60-1.70	.8	31.5	87.7	5.8
	1.70-1.80	.5	38.3	88.2	5.9
	1.80-Sink	11.8	79.1	100.0	14.6
Composite, 1/2 inch by 28 mesh: 100.0 percent.	Float-1.30	51.4	3.4	51.4	3.4
	1.30-1.35	25.4	7.0	76.8	4.6
	1.35-1.40	7.9	11.2	84.7	5.2
	1.40-1.45	2.3	16.1	87.0	5.5
	1.45-1.50	1.2	20.0	88.2	5.7
	1.50-1.60	1.1	25.9	89.3	5.9
	1.60-1.70	.8	33.8	90.1	6.2
	1.70-1.80	.6	39.8	90.7	6.4
	1.80-Sink	9.3	79.3	100.0	13.2

[1]3.0 percent of the cyclone feed was minus 28-mesh material containing 14.8 percent ash.

TABLE A-2. - Specific gravity analysis of the size fractions and composite feed to the dense-medium cyclone, plant B[1]

Size fraction and weight	Specific gravity	Direct, percent		Cumulative, percent	
		Weight	Ash	Weight	Ash
1/2 by 3/8 inch: 4.3 percent.....	Float-1.28	38.8	1.5	38.8	1.5
	1.28-1.30	15.6	3.4	54.4	2.0
	1.30-1.35	23.2	7.2	77.6	3.6
	1.35-1.40	5.9	14.2	83.5	4.3
	1.40-1.45	3.4	19.0	86.9	4.9
	1.45-1.50	2.3	24.5	89.2	5.4
	1.50-1.60	3.3	32.3	92.5	6.4
	1.60-1.70	1.7	40.8	94.2	7.0
	1.70-1.80	.7	48.0	94.9	7.3
	1.80-Sink	5.1	83.7	100.0	11.2
3/8 by 1/4 inch: 17.8 percent.....	Float-1.28	28.8	1.2	28.8	1.2
	1.28-1.30	31.3	2.9	60.1	2.1
	1.30-1.35	17.5	7.1	77.6	3.2
	1.35-1.40	6.9	13.0	84.5	4.0
	1.40-1.45	3.2	18.2	87.7	4.5
	1.45-1.50	2.0	24.2	89.7	5.0
	1.50-1.60	2.5	31.8	92.2	5.7
	1.60-1.70	1.4	40.6	93.6	6.2
	1.70-1.80	.8	47.8	94.4	6.6
	1.80-Sink	5.6	83.4	100.0	10.9

See footnote at end of table.

TABLE A-2. - Specific gravity analysis of the size fractions and composite feed to the dense-medium cyclone, plant B[1]--Continued

Size fraction and weight	Specific gravity	Direct, percent		Cumulative, percent	
		Weight	Ash	Weight	Ash
1/4 inch by 8 mesh: 47.6 percent..	Float-1.28	33.2	1.2	33.2	1.2
	1.28-1.30	27.5	2.7	60.7	1.9
	1.30-1.35	19.4	6.4	80.1	3.0
	1.35-1.40	5.9	12.4	86.0	3.6
	1.40-1.45	2.9	17.3	88.9	4.1
	1.45-1.50	1.7	22.7	90.6	4.4
	1.50-1.60	2.1	30.2	92.7	5.0
	1.60-1.70	1.1	40.2	93.8	5.4
	1.70-1.80	.6	47.4	94.4	5.7
	1.80-Sink	5.6	83.4	100.0	10.0
8 by 14 mesh: 22.5 percent.....	Float-1.28	29.5	1.1	29.5	1.1
	1.28-1.30	32.2	2.2	61.7	1.7
	1.30-1.35	15.6	6.1	77.3	2.6
	1.35-1.40	6.0	11.2	83.3	3.2
	1.40-1.45	3.1	15.7	86.4	3.6
	1.45-1.50	1.9	20.5	88.3	4.0
	1.50-1.60	2.2	28.8	90.5	4.6
	1.60-1.70	1.3	38.6	91.8	5.1
	1.70-1.80	.8	45.7	92.6	5.4
	1.80-Sink	7.4	82.4	100.0	11.1
14 by 28 mesh: 7.8 percent.....	Float-1.28	23.9	1.1	23.9	1.1
	1.28-1.30	33.8	1.9	57.7	1.6
	1.30-1.35	14.8	6.3	72.5	2.5
	1.35-1.40	5.1	11.5	77.6	3.1
	1.40-1.45	4.7	16.3	82.3	3.9
	1.45-1.50	2.1	21.1	84.4	4.3
	1.50-1.60	2.8	29.0	87.2	5.1
	1.60-1.70	2.0	38.4	89.2	5.8
	1.70-1.80	1.2	46.1	90.4	6.4
	1.80-Sink	9.6	81.5	100.0	13.6
Composite, 1/2 inch by 28 mesh: 100.0 percent.	Float-1.28	31.1	1.2	31.1	1.2
	1.28-1.30	29.2	2.6	60.3	1.9
	1.30-1.35	18.0	6.5	78.3	2.9
	1.35-1.40	6.0	12.3	84.3	3.6
	1.40-1.45	3.1	17.1	87.4	4.1
	1.45-1.50	1.9	22.4	89.3	4.5
	1.50-1.60	2.3	30.3	91.6	5.1
	1.60-1.70	1.3	39.8	92.9	5.6
	1.70-1.80	.8	47.0	93.7	6.0
	1.80-Sink	6.3	83.0	100.0	10.8

[1]10.2 percent of the cyclone feed was minus 28-mesh material containing 13.3 percent ash.

TABLE A-3. - Specific gravity analysis of the size fractions and composite feed to the dense-medium cyclone, plant C[1]

Size fraction and weight	Specific gravity	Direct, percent		Cumulative, percent	
		Weight	Ash	Weight	Ash
3/8 by 1/4 inch: 22.2 percent.....	Float-1.30	45.0	3.7	45.0	3.7
	1.30-1.35	12.0	8.1	57.0	4.6
	1.35-1.40	4.0	12.8	61.0	5.2
	1.40-1.45	3.0	17.5	64.0	5.7
	1.45-1.50	2.5	23.8	66.5	6.4
	1.50-1.60	5.7	32.0	72.2	8.4
	1.60-1.70	7.0	40.6	79.2	11.3
	1.70-1.80	5.4	47.8	84.6	13.6
	1.80-Sink	15.4	66.9	100.0	21.8
1/4 inch by 8 mesh: 58.8 percent..	Float-1.30	49.9	3.1	49.9	3.1
	1.30-1.35	15.3	7.4	65.2	4.1
	1.35-1.40	4.2	11.9	69.4	4.6
	1.40-1.45	2.3	17.4	71.7	5.0
	1.45-1.50	2.0	23.1	73.7	5.5
	1.50-1.60	4.1	31.4	77.8	6.8
	1.60-1.70	4.7	40.1	82.5	8.7
	1.70-1.80	3.7	47.2	86.2	10.4
	1.80-Sink	13.8	65.9	100.0	18.0
8 by 14 mesh: 16.6 percent.....	Float-1.30	52.4	2.8	52.4	2.8
	1.30-1.35	13.8	6.7	66.2	3.6
	1.35-1.40	2.3	11.2	68.5	3.9
	1.40-1.45	1.5	16.1	70.0	4.1
	1.45-1.50	1.6	20.9	71.6	4.5
	1.50-1.60	2.8	30.0	74.4	5.5
	1.60-1.70	3.6	39.8	78.0	7.0
	1.70-1.80	3.6	47.7	81.6	8.8
	1.80-Sink	18.4	67.9	100.0	19.7
14 by 28 mesh: 2.4 percent.....	Float-1.30	55.3	2.6	55.3	2.6
	1.30-1.35	9.7	7.7	65.0	3.4
	1.35-1.40	2.6	12.4	67.6	3.7
	1.40-1.45	1.5	15.5	69.1	4.0
	1.45-1.50	1.0	21.6	70.1	4.2
	1.50-1.60	1.9	28.1	72.0	4.8
	1.60-1.70	2.2	37.6	74.2	5.8
	1.70-1.80	2.0	45.7	76.2	6.9
	1.80-Sink	23.8	66.1	100.0	21.0
Composite, 3/8 inch by 28 mesh: 100.0 percent.	Float-1.30	49.3	3.2	49.3	3.2
	1.30-1.35	14.2	7.4	63.5	4.1
	1.35-1.40	3.8	12.0	67.3	4.6
	1.40-1.45	2.3	17.3	69.6	5.0
	1.45-1.50	2.0	22.9	71.6	5.5
	1.50-1.60	4.2	31.4	75.8	6.9
	1.60-1.70	5.0	39.5	80.8	9.0
	1.70-1.80	4.1	47.4	84.9	10.8
	1.80-Sink	15.1	66.3	100.0	19.2

[1]6.3 percent of the cyclone feed was minus 28-mesh material containing 11.2 percent ash.

TABLE A-4. - Specific gravity analysis of the size fractions and composite feed to the dense-medium cyclone, plant D[1]

Size fraction and weight	Specific gravity	Direct, percent		Cumulative, percent	
		Weight	Ash	Weight	Ash
5/8 by 1/2 inch: 3.9 percent.....	Float-1.28	7.1	2.2	7.1	2.2
	1.28-1.30	27.1	3.8	34.2	3.5
	1.30-1.35	31.0	7.7	65.2	5.5
	1.35-1.40	8.9	13.7	74.1	6.5
	1.40-1.45	3.8	19.1	77.9	7.1
	1.45-1.50	1.4	24.2	79.3	7.4
	1.50-1.60	1.9	31.0	81.2	7.9
	1.60-1.70	1.2	39.3	82.4	8.4
	1.70-1.80	1.0	45.5	83.4	8.8
	1.80-Sink	16.6	84.5	100.0	21.4
1/2 by 3/8 inch: 15.2 percent.....	Float-1.28	5.9	1.8	5.9	1.8
	1.28-1.30	30.8	3.5	36.7	3.2
	1.30-1.35	32.1	7.6	68.8	5.3
	1.35-1.40	8.5	13.5	77.3	6.2
	1.40-1.45	3.3	18.9	80.6	6.7
	1.45-1.50	1.4	24.1	82.0	7.0
	1.50-1.60	1.6	30.4	83.6	7.4
	1.60-1.70	.9	38.9	84.5	7.8
	1.70-1.80	.8	45.1	85.3	8.1
	1.80-Sink	14.7	84.9	100.0	19.4
3/8 by 1/4 inch: 28.6 percent.....	Float-1.28	3.3	1.7	3.3	1.7
	1.28-1.30	36.8	3.3	40.1	3.2
	1.30-1.35	30.8	7.3	70.9	5.0
	1.35-1.40	8.7	13.0	79.6	5.8
	1.40-1.45	3.1	18.2	82.7	6.3
	1.45-1.50	1.3	22.5	84.0	6.6
	1.50-1.60	1.5	29.8	85.5	7.0
	1.60-1.70	.8	37.8	86.3	7.2
	1.70-1.80	.6	44.5	86.9	7.5
	1.80-Sink	13.1	84.9	100.0	17.6
1/4 inch by 8 mesh: 41.3 percent...	Float-1.28	11.1	1.3	11.1	1.3
	1.28-1.30	33.0	2.8	44.1	2.4
	1.30-1.35	27.6	6.8	71.7	4.1
	1.35-1.40	9.0	12.2	80.7	5.0
	1.40-1.45	3.6	17.3	84.3	5.5
	1.45-1.50	1.2	22.0	85.5	5.8
	1.50-1.60	1.5	28.3	87.0	6.2
	1.60-1.70	.8	37.1	87.8	6.4
	1.70-1.80	.6	42.0	88.4	6.7
	1.80-Sink	11.6	83.7	100.0	15.6

See footnote at end of table.

TABLE A-4. - Specific gravity analysis of the size fractions and composite feed to the dense-medium cyclone, plant D[1]--Continued

Size fraction and weight	Specific gravity	Direct, percent		Cumulative, percent	
		Weight	Ash	Weight	Ash
8 by 14 mesh: 9.8 percent.....	Float-1.28	19.9	1.4	19.9	1.4
	1.28-1.30	26.3	2.9	46.2	2.3
	1.30-1.35	21.5	6.6	67.7	3.6
	1.35-1.40	9.3	11.6	77.0	4.6
	1.40-1.45	4.1	16.4	81.1	5.2
	1.45-1.50	3.0	19.8	84.1	5.7
	1.50-1.60	1.5	26.8	85.6	6.1
	1.60-1.70	.9	35.0	86.5	6.4
	1.70-1.80	.6	42.9	87.1	6.6
	1.80-Sink	12.9	81.6	100.0	16.3
14 by 28 mesh: 1.2 percent.....	Float-1.28	3.3	1.2	3.3	1.2
	1.28-1.30	40.1	1.7	43.4	1.7
	1.30-1.35	24.3	5.7	67.7	3.1
	1.35-1.40	8.3	11.3	76.0	4.0
	1.40-1.45	4.2	15.7	80.2	4.6
	1.45-1.50	1.8	19.5	82.0	4.9
	1.50-1.60	1.9	25.2	83.9	5.4
	1.60-1.70	.9	34.3	84.8	5.7
	1.70-1.80	.5	39.1	85.3	5.9
	1.80-Sink	14.7	82.3	100.0	17.1
Composite, 5/8 inch by 28 mesh: 100.0 percent.	Float-1.28	8.7	1.5	8.7	1.5
	1.28-1.30	33.0	3.1	41.7	2.8
	1.30-1.35	28.8	7.1	70.5	4.5
	1.35-1.40	8.8	12.6	79.3	5.4
	1.40-1.45	3.5	17.6	82.8	5.9
	1.45-1.50	1.3	22.5	84.1	6.2
	1.50-1.60	1.6	28.9	85.7	6.6
	1.60-1.70	.8	37.4	86.5	6.9
	1.70-1.80	.6	43.4	87.1	7.2
	1.80-Sink	12.9	84.0	100.0	17.1

[1] 2.1 percent of the cyclone feed was minus 28-mesh material containing 26.8 percent ash.

TABLE A-5. - Specific gravity analysis of the size fractions and composite feed to the dense-medium cyclone, plant E[1]

Size fraction and weight	Specific gravity	Direct, percent		Cumulative, percent	
		Weight	Ash	Weight	Ash
1/2 by 3/8 inch: 3.1 percent.....	Float-1.28	19.7	2.1	19.7	2.1
	1.28-1.30	23.3	2.4	43.0	2.3
	1.30-1.35	8.7	5.8	51.7	2.8
	1.35-1.40	3.2	10.8	54.9	3.3
	1.40-1.45	2.7	17.4	57.6	4.0
	1.45-1.50	1.9	23.4	59.5	4.6
	1.50-1.60	3.2	30.5	62.7	5.9
	1.60-1.70	3.2	38.0	65.9	7.5
	1.70-1.80	2.6	46.0	68.5	8.9
	1.80-Sink	31.5	75.1	100.0	29.8
3/8 by 1/4 inch: 13.1 percent.....	Float-1.28	29.9	1.7	29.9	1.7
	1.28-1.30	26.5	2.6	56.4	2.1
	1.30-1.35	8.8	5.7	65.2	2.6
	1.35-1.40	4.5	10.5	69.7	3.1
	1.40-1.45	2.9	16.7	72.6	3.6
	1.45-1.50	1.9	23.3	74.5	4.2
	1.50-1.60	3.2	31.0	77.7	5.3
	1.60-1.70	2.7	39.6	80.4	6.4
	1.70-1.80	2.1	46.6	82.5	7.4
	1.80-Sink	17.5	75.7	100.0	19.4
1/4 inch by 8 mesh: 49.5 percent...	Float-1.28	46.1	1.6	46.1	1.6
	1.28-1.30	17.4	2.7	63.5	1.9
	1.30-1.35	10.7	5.3	74.2	2.4
	1.35-1.40	5.7	9.6	79.9	2.9
	1.40-1.45	2.5	15.9	82.4	3.3
	1.45-1.50	1.6	22.5	84.0	3.7
	1.50-1.60	2.4	30.0	86.4	4.4
	1.60-1.70	1.8	39.1	88.2	5.1
	1.70-1.80	1.4	47.0	89.6	5.8
	1.80-Sink	10.4	74.3	100.0	12.9
8 by 14 mesh: 26.8 percent.....	Float-1.28	43.4	1.3	43.4	1.3
	1.28-1.30	21.5	2.2	64.9	1.6
	1.30-1.35	11.1	5.4	76.0	2.2
	1.35-1.40	4.7	9.5	80.7	2.6
	1.40-1.45	2.6	14.0	83.3	2.9
	1.45-1.50	1.7	20.2	85.0	3.3
	1.50-1.60	2.2	29.1	87.2	3.9
	1.60-1.70	1.6	38.0	88.8	4.5
	1.70-1.80	1.4	45.0	90.2	5.2
	1.80-Sink	9.8	72.4	100.0	11.8

See footnote at end of table.

TABLE A-5. - Specific gravity analysis of the size fractions and composite feed to the dense-medium cyclone, plant E[1]--Continued

Size fraction and weight	Specific gravity	Direct, percent		Cumulative, percent	
		Weight	Ash	Weight	Ash
14 by 28 mesh: 7.5 percent.....	Float-1.28	36.1	1.2	36.1	1.2
	1.28-1.30	29.1	1.6	65.2	1.4
	1.30-1.35	10.7	5.3	75.9	1.9
	1.35-1.40	4.3	9.4	80.2	2.3
	1.40-1.45	2.4	13.6	82.6	2.6
	1.45-1.50	1.7	19.3	84.3	3.0
	1.50-1.60	2.3	27.7	86.6	3.6
	1.60-1.70	1.8	37.2	88.4	4.3
	1.70-1.80	1.3	45.6	89.7	4.9
	1.80-Sink	10.3	73.3	100.0	12.0
Composite, 1/2 inch by 28 mesh: 100.0 percent.	Float-1.28	41.7	1.5	41.7	1.5
	1.28-1.30	20.7	2.4	62.4	1.8
	1.30-1.35	10.5	5.4	72.9	2.3
	1.35-1.40	5.1	9.7	78.0	2.8
	1.40-1.45	2.6	15.4	80.6	3.2
	1.45-1.50	1.7	21.8	82.3	3.6
	1.50-1.60	2.5	29.9	84.8	4.4
	1.60-1.70	1.9	38.8	86.7	5.1
	1.70-1.80	1.5	46.3	88.2	5.8
	1.80-Sink	11.8	74.2	100.0	13.9

[1]5.5 percent of the cyclone feed was minus 28-mesh material containing 10.0 percent ash.

TABLE A-6. - Specific gravity analysis of the size fractions and composite feed to the primary dense-medium cyclone, plant F[1]

Size fraction and weight	Specific gravity	Direct, percent		Cumulative, percent	
		Weight	Ash	Weight	Ash
3/4 by 1/2 inch: 17.7 percent.....	Float-1.30	5.9	2.6	5.9	2.6
	1.30-1.35	24.3	4.2	30.2	3.9
	1.35 1.40	31.2	6.3	61.4	5.1
	1.40-1.45	6.4	12.8	67.8	5.8
	1.45-1.50	2.2	18.6	70.0	6.2
	1.50-1.60	1.7	27.2	71.7	6.7
	1.60-1.70	1.2	37.0	72.9	7.2
	1.70-1.80	1.1	44.3	74.0	7.8
	1.80-Sink	26.0	86.3	100.0	28.2

See footnote at end of table.

TABLE A-6. - Specific gravity analysis of the size fractions and composite feed to the primary dense-medium cyclone, plant F[1]--Continued

Size fraction and weight	Specific gravity	Direct, percent		Cumulative, percent	
		Weight	Ash	Weight	Ash
1/2 by 3/8 inch: 9.8 percent.....	Float-1.30	8.6	2.3	8.6	2.3
	1.30-1.35	7.1	4.2	15.7	3.2
	1.35-1.40	49.7	5.2	65.4	4.7
	1.40-1.45	5.8	12.4	71.2	5.3
	1.45-1.50	1.9	18.6	73.1	5.7
	1.50-1.60	1.9	26.9	75.0	6.2
	1.60-1.70	1.1	36.4	76.1	6.6
	1.70-1.80	1.0	44.8	77.1	7.1
	1.80-Sink	22.9	86.4	100.0	25.3
3/8 by 1/4 inch: 14.8 percent.....	Float-1.30	9.9	1.9	9.9	1.9
	1.30-1.35	46.6	4.0	56.5	3.6
	1.35-1.40	13.4	7.9	69.9	4.4
	1.40-1.45	5.9	12.1	75.8	5.0
	1.45-1.50	1.9	17.7	77.7	5.4
	1.50-1.60	1.7	25.8	79.4	5.8
	1.60-1.70	1.0	36.0	80.4	6.2
	1.70-1.80	.7	44.1	81.1	6.5
	1.80-Sink	18.9	86.3	100.0	21.6
1/4 inch by 8 mesh: 26.3 percent...	Float-1.30	19.3	1.7	19.3	1.7
	1.30-1.35	47.2	3.8	66.5	3.2
	1.35-1.40	11.5	7.9	78.0	3.9
	1.40-1.45	5.0	11.9	83.0	4.4
	1.45-1.50	2.0	16.3	85.0	4.6
	1.50-1.60	1.6	23.6	86.6	5.0
	1.60-1.70	.8	34.7	87.4	5.3
	1.70-1.80	.5	42.7	87.9	5.5
	1.80-Sink	12.1	86.8	100.0	15.3
8 by 14 mesh: 24.8 percent.....	Float-1.30	29.1	1.1	29.1	1.1
	1.30-1.35	46.0	3.7	75.1	2.7
	1.35-1.40	9.5	7.7	84.6	3.2
	1.40-1.45	3.9	11.9	88.5	3.6
	1.45-1.50	1.5	16.0	90.0	3.8
	1.50-1.60	1.3	22.8	91.3	4.1
	1.60-1.70	.6	33.3	91.9	4.3
	1.70-1.80	.3	41.0	92.2	4.4
	1.80-Sink	7.8	86.1	100.0	10.8

See footnote at end of table.

TABLE A-6. - Specific gravity analysis of the size fractions and composite feed to the primary dense-medium cyclone, plant F[1]--Continued

Size fraction and weight	Specific gravity	Direct, percent		Cumulative, percent	
		Weight	Ash	Weight	Ash
14 by 28 mesh: 6.6 percent.....	Float-1.30	36.8	1.4	36.8	1.4
	1.30-1.35	40.6	2.8	77.4	2.1
	1.35-1.40	7.1	8.6	84.5	2.7
	1.40-1.45	4.0	12.4	88.5	3.1
	1.45-1.50	1.8	16.6	90.3	3.4
	1.50-1.60	1.5	23.0	91.8	3.7
	1.60-1.70	.7	32.5	92.5	3.9
	1.70-1.80	.4	42.3	92.9	4.1
	1.80-Sink	7.1	86.7	100.0	10.0
Composite, 3/4 inch by 28 mesh: 100.0 percent.....	Float-1.30	18.0	1.5	18.0	1.5
	1.30-1.35	38.6	3.8	56.6	3.1
	1.35-1.40	18.1	6.6	75.7	3.9
	1.40-1.45	5.1	12.2	79.8	4.4
	1.45-1.50	1.9	17.2	81.7	4.7
	1.50-1.60	1.6	24.7	83.3	5.1
	1.60-1.70	.9	35.4	84.2	5.4
	1.70-1.80	.6	43.5	84.8	5.7
	1.80-Sink	15.2	86.4	100.0	18.0

[1]4.2 percent of the cyclone feed was minus 28-mesh material containing 12.2 percent ash.

TABLE A-7. - Specific gravity analysis of the size fractions and composite feed to the secondary dense-medium cyclone, plant F[1]

Size fraction and weight	Specific gravity	Direct, percent		Cumulative, percent	
		Weight	Ash	Weight	Ash
3/4 by 1/2 inch: 23.9 percent.....	Float-1.30	-	-	-	-
	1.30-1.35	0.1	7.8	0.1	7.8
	1.35-1.40	2.0	10.3	2.1	10.2
	1.40-1.45	11.5	13.6	13.6	13.1
	1.45-1.50	6.5	19.3	20.1	15.1
	1.50-1.60	5.3	26.9	25.4	17.6
	1.60-1.70	3.2	37.1	28.6	19.7
	1.70-1.80	2.5	46.2	31.1	21.9
	1.80-Sink	68.9	86.4	100.0	66.3

See footnote at end of table.

TABLE A-7. - Specific gravity analysis of the size fractions and composite feed to the secondary dense-medium cyclone, plant F[1]--Continued

Size fraction and weight	Specific gravity	Direct, percent		Cumulative, percent	
		Weight	Ash	Weight	Ash
1/2 by 3/8 inch: 13.6 percent.....	Float-1.30	-	-	-	-
	1.30-1.35	0.4	6.8	0.4	6.8
	1.35-1.40	3.6	10.2	4.0	9.9
	1.40-1.45	12.4	13.2	16.4	12.4
	1.45-1.50	5.8	18.9	22.2	14.1
	1.50-1.60	5.6	27.3	27.8	16.7
	1.60-1.70	3.7	38.3	31.5	19.3
	1.70-1.80	3.0	46.8	34.5	21.7
	1.80-Sink	65.5	87.5	100.0	64.8
3/8 by 1/4 inch: 17.9 percent.....	Float-1.30	.1	6.8	.1	6.8
	1.30-1.35	.7	6.1	.8	6.2
	1.35-1.40	3.7	9.8	4.5	9.2
	1.40-1.45	13.8	13.2	18.3	12.2
	1.45-1.50	7.4	22.0	25.7	15.0
	1.50-1.60	5.0	21.9	30.7	16.1
	1.60-1.70	3.3	37.6	34.0	18.2
	1.70-1.80	2.9	46.0	36.9	20.4
	1.80-Sink	63.1	86.7	100.0	62.2
1/4 inch by 8 mesh: 23.3 percent...	Float-1.30	.4	2.6	.4	2.6
	1.30-1.35	2.2	4.9	2.6	4.5
	1.35-1.40	4.5	9.0	7.1	7.4
	1.40-1.45	16.4	13.0	23.5	11.3
	1.45-1.50	8.2	17.3	31.7	12.9
	1.50-1.60	6.9	25.2	38.6	15.1
	1.60-1.70	3.7	36.3	42.3	16.9
	1.70-1.80	2.6	46.0	44.9	18.6
	1.80-Sink	55.1	87.2	100.0	56.4
8 by 14 mesh: 17.0 percent.....	Float-1.30	3.2	2.0	3.2	2.0
	1.30-1.35	6.0	4.5	9.2	3.6
	1.35-1.40	5.8	9.1	15.0	5.7
	1.40-1.45	12.6	13.3	27.6	9.2
	1.45-1.50	7.6	17.8	35.2	11.0
	1.50-1.60	6.7	24.3	41.9	13.2
	1.60-1.70	3.9	34.0	45.8	14.9
	1.70-1.80	2.7	44.6	48.5	16.6
	1.80-Sink	51.5	87.3	100.0	53.0

See footnote at end of table.

TABLE A-7. - Specific gravity analysis of the size fractions and composite feed to the secondary dense-medium cyclone, plant F[1]--Continued

Size fraction and weight	Specific gravity	Direct, percent		Cumulative, percent	
		Weight	Ash	Weight	Ash
14 by 28 mesh: 4.3 percent.....	Float-1.30	8.0	1.3	8.0	1.3
	1.30-1.35	9.8	4.3	17.8	3.0
	1.35-1.40	5.2	8.9	23.0	4.3
	1.40-1.45	7.0	13.0	30.0	6.3
	1.45-1.50	6.0	17.6	36.0	8.2
	1.50-1.60	7.3	23.7	43.3	10.8
	1.60-1.70	3.9	33.0	47.2	12.6
	1.70-1.80	2.9	42.9	50.1	14.4
	1.80-Sink	49.9	86.5	100.0	50.4
Composite, 3/4 inch by 28 mesh: 100.0 percent.	Float-1.30	1.0	2.0	1.0	2.0
	1.30-1.35	2.1	4.8	3.1	3.9
	1.35-1.40	3.9	9.5	7.0	7.0
	1.40-1.45	13.2	13.2	20.2	11.0
	1.45-1.50	7.1	18.9	27.3	13.1
	1.50-1.60	6.0	25.1	33.3	15.3
	1.60-1.70	3.6	36.3	36.9	17.3
	1.70-1.80	2.7	45.8	39.6	19.2
	1.80-Sink	60.4	86.9	100.0	60.1

[1]19.0 percent of the feed was minus 28-mesh material. The 28- by 200-mesh fraction contained 31.5 percent ash and represented 50.4 percent by weight. The minus 200-mesh material, 49.6 percent by weight, was 75.8 percent magnetic.

TABLE A-8. - Specific gravity analysis of the size fractions and composite feed to the dense-medium cyclone, plant G[1]

Size fraction and weight	Specific gravity	Direct, percent		Cumulative, percent	
		Weight	Ash	Weight	Ash
5/16 by 1/4 inch: 2.8 percent.....	Float-1.30	16.1	2.8	16.1	2.8
	1.30-1.35	19.4	4.7	35.5	3.8
	1.35-1.40	6.8	8.6	42.3	4.6
	1.40-1.45	4.1	13.0	46.4	5.3
	1.45-1.50	3.3	17.9	49.7	6.2
	1.50-1.60	4.3	25.0	54.0	7.7
	1.60-1.70	3.1	33.3	57.1	9.1
	1.70-1.80	2.2	40.4	59.3	10.2
	1.80-Sink	40.7	85.4	100.0	40.8

See footnote at end of table.

TABLE A-8. - Specific gravity analysis of the size fractions and composite feed to the dense-medium cyclone, plant G[1]--Continued

Size fraction and weight	Specific gravity	Direct, percent		Cumulative, percent	
		Weight	Ash	Weight	Ash
1/4 inch by 8 mesh: 67.9 percent...	Float-1.30	33.2	1.8	33.2	1.8
	1.30-1.35	28.8	4.1	62.0	2.9
	1.35-1.40	6.4	8.6	68.4	3.4
	1.40-1.45	3.6	12.5	72.0	3.8
	1.45-1.50	2.1	17.2	74.1	4.2
	1.50-1.60	2.4	25.0	76.5	4.9
	1.60-1.70	1.7	32.9	78.2	5.5
	1.70-1.80	1.1	40.7	79.3	6.0
	1.80-Sink	20.7	87.7	100.0	22.9
8 by 14 mesh: 24.8 percent.....	Float-1.30	35.7	1.5	35.7	1.5
	1.30-1.35	20.9	3.9	56.6	2.4
	1.35-1.40	5.1	8.2	61.7	2.9
	1.40-1.45	2.8	12.4	64.5	3.3
	1.45-1.50	1.7	17.2	66.2	3.6
	1.50-1.60	2.2	24.1	68.4	4.3
	1.60-1.70	1.4	32.4	69.8	4.8
	1.70-1.80	1.0	39.3	70.8	5.3
	1.80-Sink	29.2	82.7	100.0	27.9
14 by 28 mesh: 4.5 percent.....	Float-1.30	32.0	1.4	32.0	1.4
	1.30-1.35	12.7	4.1	44.7	2.2
	1.35-1.40	3.5	8.2	48.2	2.6
	1.40-1.45	2.2	11.6	50.4	3.0
	1.45-1.50	1.5	15.8	51.9	3.4
	1.50-1.60	2.1	22.9	54.0	4.1
	1.60-1.70	1.5	31.2	55.5	4.8
	1.70-1.80	1.1	37.4	56.6	5.5
	1.80-Sink	43.4	83.6	100.0	39.4
Composite, 5/16 inch by 28 mesh: 100.0 percent.	Float-1.30	33.5	1.7	33.5	1.7
	1.30-1.35	25.5	4.1	59.0	2.7
	1.35-1.40	5.9	8.5	64.9	3.3
	1.40-1.45	3.4	12.5	68.3	3.7
	1.45-1.50	2.0	17.2	70.3	4.1
	1.50-1.60	2.5	24.6	72.8	4.8
	1.60-1.70	1.8	32.9	74.6	5.5
	1.70-1.80	1.2	40.4	75.8	6.0
	1.80-Sink	24.2	86.3	100.0	25.5

[1]2.4 percent of the cyclone feed was minus 28-mesh material containing 35.8 percent ash.

TABLE A-9. - Summary of the performance characteristics of the dense-medium cyclone washer, plant A

Size, inches and mesh	1/2 by 3/8	3/8 by 1/4	1/4 by 8	8 by 14	14 by 28	1/2 by 28
Screen analysis, percent:						
Feed	5.3	25.1	47.3	18.9	3.4	100.0
Clean coal	4.9	24.9	48.0	18.8	3.4	100.0
Refuse	7.8	26.8	42.1	19.8	3.5	100.0
Ash, percent:						
Feed	16.6	13.1	12.7	13.4	14.6	13.2
Clean coal	6.2	6.0	5.8	5.6	5.6	5.8
Refuse	74.9	71.3	69.6	69.1	72.0	70.5
Actual recovery ... percent	84.9	89.1	89.2	87.7	86.4	88.6
Theoretical recovery ... do	84.9	89.2	89.4	88.0	87.3	88.8
Efficiency ... do	100.0	99.9	99.8	99.7	99.0	99.8
Ash error ... do	0.0	0.0	0.0	0.0	0.2	0.0
Float in refuse ... percent of product	2.0	3.5	4.6	4.6	5.7	4.3
Sink in clean coal ... do	0.3	0.3	0.4	0.4	0.4	0.4
Total misplaced material ... percent of feed	0.6	0.6	0.9	0.9	1.1	0.8
Near-gravity ±0.10 material ... do	3.0	3.0	2.7	2.5	2.1	2.7
Specific gravity of separation	1.52	1.54	1.55	1.56	1.60	1.55
Probable error, specific gravity	0.025	0.028	0.028	0.032	0.050	0.028
Imperfection	0.016	0.018	0.018	0.020	0.031	0.018
Error area	18	19	22	23	38	22
Distribution, percent to washed coal (specific gravity fraction):						
Float-1.30	99.9	99.9	99.9	99.8	99.7	99.9
1.30-1.35	99.9	99.9	99.8	99.8	99.4	99.8
1.35-1.40	99.7	99.7	99.8	99.7	98.9	99.7
1.40-1.45	99.2	99.4	99.2	98.9	97.8	99.2
1.45-1.50	92.9	95.9	95.5	95.6	95.5	95.5
1.50-1.60	30.8	43.5	49.9	59.9	77.6	50.5
1.60-1.70	0.0	0.0	5.7	8.2	26.4	5.4
1.70-1.80	0.0	0.0	0.0	0.0	8.1	0.2
1.80-Sink	0.0	0.0	0.0	0.0	1.1	0.0

TABLE A-10. - Summary of the performance characteristics of the dense-medium cyclone washer, plant B

Size, inches and mesh	1/2 by 3/8	3/8 by 1/4	1/4 by 8	8 by 14	14 by 28	1/2 by 28
Screen analysis, percent:						
Feed	4.3	17.8	47.6	22.5	7.8	100.0
Clean coal	4.1	17.4	48.1	22.8	7.6	100.0
Refuse	5.6	21.6	42.7	20.0	10.1	100.0
Ash, percent:						
Feed	11.2	10.9	10.0	11.1	13.6	10.8
Clean coal	5.2	4.8	4.4	4.2	4.8	4.5
Refuse	56.3	60.1	64.1	66.8	67.0	63.6
Actual recovery ... percent	88.2	89.0	90.5	89.0	85.9	89.4
Theoretical recovery ... do	88.4	89.0	90.6	89.1	86.2	89.4
Efficiency ... do	99.8	100.0	99.9	99.9	99.7	100.0
Ash error ... do	0.0	0.0	0.0	0.0	0.1	0.0
Float in refuse ... percent of product	6.5	6.6	6.3	6.7	8.7	6.4
Sink in clean coal ... do	0.3	0.1	0.4	0.8	0.9	0.6
Total misplaced material ... percent of feed	1.0	0.8	1.0	1.5	2.0	1.2
Near-gravity ±0.10 material ... do	9.8	7.7	6.1	5.7	5.5	6.8
Specific gravity of separation	1.49	1.50	1.51	1.53	1.57	1.51
Probable error, specific gravity	0.028	0.025	0.032	0.038	0.051	0.034
Imperfection	0.019	0.017	0.021	0.025	0.032	0.022
Error area	15	14	19	29	32	23
Distribution, percent to washed coal (specific gravity fraction):						
Float-1.28	100.0	100.0	100.0	100.0	100.0	100.0
1.28-1.30	100.0	100.0	99.9	99.8	99.7	99.9
1.30-1.35	100.0	100.0	100.0	99.9	99.6	99.9
1.35-1.40	100.0	99.9	99.9	99.7	99.3	99.8
1.40-1.45	98.1	98.5	98.5	98.9	98.9	98.6
1.45-1.50	61.5	67.3	78.4	88.3	93.8	78.1
1.50-1.60	0.0	2.5	19.3	37.8	57.6	22.1
1.60-1.70	0.0	0.0	0.0	4.8	9.0	2.1
1.70-1.80	0.0	0.0	0.0	6.3	2.9	2.0
1.80-Sink	0.0	0.0	0.0	0.0	0.4	0.1

TABLE A-11. - Summary of the performance characteristics of the dense-medium cyclone washer, plant C

Size, inches and mesh	3/8 by 1/4	1/4 by 8	8 by 14	14 by 28	3/8 by 28
Screen analysis, percent:					
Feed	22.2	58.8	16.6	2.4	100.0
Clean coal	20.1	60.5	16.9	2.5	100.0
Refuse	28.0	54.1	15.9	2.0	100.0
Ash, percent:					
Feed	21.8	18.0	19.7	21.0	19.2
Clean coal	6.8	5.9	5.2	5.2	6.0
Refuse	53.2	54.3	59.7	61.0	55.0
Actual recovery ... percent	67.6	75.1	73.4	71.8	73.0
Theoretical recovery ... do	67.8	75.1	73.6	72.9	73.2
Efficiency ... do	99.7	100.0	99.7	98.5	99.7
Ash error ... do	0.0	0.0	0.1	0.4	0.1
Float in refuse ... percent of product	3.7	4.4	4.1	6.1	4.1
Sink in clean coal ... do	1.7	1.5	1.3	1.5	1.6
Total misplaced material ... percent of feed	2.3	2.2	2.0	2.8	2.2
Near-gravity ±0.10 material ... do	11.5	8.5	6.3	4.1	8.7
Specific gravity of separation	1.52	1.53	1.57	1.62	1.53
Probable error, specific gravity	0.026	0.032	0.050	0.058	0.030
Imperfection	0.017	0.021	0.032	0.036	0.020
Error area	14	18	26	41	18
Distribution, percent to washed coal (specific gravity fraction):					
Float-1.30	100.0	99.9	99.7	99.1	99.9
1.30-1.35	100.0	99.8	99.6	97.1	99.8
1.35-1.40	100.0	99.4	98.9	94.7	99.4
1.40-1.45	98.9	98.9	98.3	96.2	98.8
1.45-1.50	90.8	93.8	96.7	91.7	93.2
1.50-1.60	21.5	33.2	60.8	80.4	33.0
1.60-1.70	1.0	1.6	8.2	39.3	2.6
1.70-1.80	0.0	0.0	0.0	3.6	0.0
1.80-Sink	0.0	0.0	0.0	1.2	0.0

TABLE A-12. - Summary of the performance characteristics of the dense-medium cyclone washer, plant D

Size, inches and mesh	5/8 by 1/2	1/2 by 3/8	3/8 by 1/4	1/4 by 8	8 by 14	14 by 28	5/8 by 28
Screen analysis, percent:							
Feed	3.9	15.2	28.6	41.3	9.8	1.2	100.0
Clean coal	3.7	14.9	28.2	42.3	9.8	1.1	100.0
Refuse	4.9	16.4	29.9	37.7	9.7	1.4	100.0
Ash, percent:							
Feed	21.4	19.4	17.6	15.6	16.3	17.1	17.1
Clean coal	6.3	6.0	5.8	5.3	5.6	5.5	5.6
Refuse	60.3	60.2	60.5	61.5	66.6	70.3	61.6
Actual recovery ... percent	72.1	75.3	78.4	81.6	82.4	82.1	79.5
Theoretical recovery ... do	73.2	76.3	79.6	82.8	83.5	83.9	80.7
Efficiency ... do	98.5	98.7	98.5	98.6	98.7	97.8	98.5
Ash error ... do	0.1	0.1	0.1	0.2	0.2	0.5	0.1
Float in refuse ... percent of product	9.3	10.1	9.6	12.5	12.3	11.0	11.9
Sink in clean coal ... do	0.8	0.6	1.0	1.3	0.4	1.3	1.6
Total misplaced material ... percent of feed	3.2	2.9	2.9	3.4	2.5	3.0	3.7
Near-gravity ±0.10 material ... do	45.2	45.2	43.9	25.3	7.8	4.2	31.2
Specific gravity of separation	1.40	1.40	1.40	1.43	1.51	1.55	1.42
Probable error, specific gravity	0.020	0.020	0.022	0.031	0.040	0.057	0.029
Imperfection	0.014	0.014	0.016	0.022	0.026	0.037	0.020
Error area	12	12	15	20	31	43	21
Distribution, percent to washed coal (specific gravity fraction):							
Float-1.28	99.9	99.8	99.1	99.4	99.8	98.8	99.5
1.28-1.30	99.6	99.5	99.5	99.4	99.4	99.4	99.4
1.30-1.35	98.4	98.1	98.2	98.5	98.9	98.7	98.4
1.35-1.40	77.8	79.8	85.0	92.1	97.0	96.9	88.6
1.40-1.45	14.1	12.8	23.9	57.1	86.5	92.7	46.4
1.45-1.50	2.0	2.2	5.5	16.6	73.1	81.7	15.4
1.50-1.60	0.0	0.0	0.0	3.2	21.2	49.1	3.9
1.60-1.70	0.0	0.0	0.0	2.1	2.7	12.9	1.2
1.70-1.80	0.0	0.0	0.0	0.0	5.1	4.7	0.5
1.80-Sink	0.0	0.0	0.0	0.0	0.0	2.9	0.0

TABLE A-13. - Summary of the performance characteristics of the dense-medium cyclone washer, plant E

Size, inches and mesh	1/2 by 3/8	3/8 by 1/4	1/4 by 8	8 by 14	14 by 28	1/2 by 28
Screen analysis, percent:						
Feed	3.1	13.1	49.5	26.8	7.5	100.0
Clean coal	2.2	11.3	50.6	27.9	8.0	100.0
Refuse	6.8	21.1	44.8	22.1	5.2	100.0
Ash, percent:						
Feed	29.8	19.4	12.9	11.8	12.0	13.9
Clean coal	4.2	3.8	3.5	3.3	3.2	3.5
Refuse	65.3	62.0	59.2	56.4	53.7	59.3
Actual recovery ... percent	58.0	73.2	83.1	84.0	82.6	81.3
Theoretical recovery ... do	58.2	73.2	83.3	84.9	85.2	81.7
Efficiency ... do	99.7	100.0	99.8	98.9	96.9	99.5
Ash error ... do	0.1	0.0	0.0	0.2	0.5	0.2
Float in refuse ... percent of product	1.0	1.3	3.2	8.9	17.2	5.1
Sink in clean coal ... do	0.9	0.7	0.8	0.6	1.1	0.8
Total misplaced material ... percent of feed	0.9	0.9	1.2	1.9	3.9	1.6
Near-gravity ±0.10 material ... do	9.2	10.2	9.2	6.5	5.8	8.3
Specific gravity of separation	1.46	1.46	1.47	1.50	1.52	1.48
Probable error, specific gravity	0.021	0.022	0.028	0.034	0.042	0.031
Imperfection	0.014	0.015	0.019	0.023	0.028	0.021
Error area	12	13	18	27	39	20
Distribution, percent to washed coal (specific gravity fraction):						
Float-1.28	100.0	100.0	100.0	99.4	98.0	99.7
1.28-1.30	100.0	100.0	99.7	99.3	97.8	99.5
1.30-1.35	100.0	100.0	99.7	98.6	96.1	99.3
1.35-1.40	99.7	99.8	99.5	97.2	94.8	98.8
1.40-1.45	94.3	96.9	95.5	92.9	90.1	94.8
1.45-1.50	33.5	31.4	49.7	68.5	74.9	53.4
1.50-1.60	0.2	1.6	8.2	12.0	30.1	9.3
1.60-1.70	0.0	0.0	0.4	5.6	8.3	2.1
1.70-1.80	0.0	0.0	0.0	1.2	3.1	0.5
1.80-Sink	0.0	0.0	0.0	0.9	1.6	0.3

TABLE A-14. - Summary of the performance characteristics of the primary dense-medium cyclone washer, plant F

Size, inches and mesh	3/4 by 1/2	1/2 by 3/8	3/8 by 1/4	1/4 by 8	8 by 14	14 by 28	3/4 by 28
Screen analysis, percent:							
Feed	17.7	9.8	14.8	26.3	24.8	6.6	100.0
Clean coal	14.6	8.4	13.8	28.1	28.0	7.1	100.0
Refuse	27.1	14.1	17.8	20.9	14.9	5.2	100.0
Ash, percent:							
Feed	28.2	25.3	21.6	15.3	10.8	10.0	18.0
Clean coal	5.2	4.8	4.5	4.0	3.5	3.1	4.1
Refuse	66.3	64.8	62.2	56.4	53.0	50.4	60.5
Actual recovery ... percent	62.4	65.8	70.4	78.4	85.2	85.5	75.3
Theoretical recovery ... do	63.0	65.9	70.5	79.0	86.5	88.4	76.2
Efficiency ... do	99.0	99.8	99.9	99.2	98.5	96.7	98.8
Ash error ... do	0.0	0.0	0.0	0.0	0.1	0.3	0.0
Float in refuse ... percent of product	4.7	5.8	7.4	10.8	20.8	29.9	11.8
Sink in clean coal ... do	2.4	1.9	2.3	2.2	1.5	1.1	2.0
Total misplaced material ... percent of feed	3.3	3.2	3.8	4.0	4.4	5.3	4.4
Near-gravity ±0.10 material ... do	59.5	63.4	51.3	45.3	24.2	11.7	43.6
Specific gravity of separation	1.41	1.41	1.41	1.41	1.43	1.46	1.42
Probable error, specific gravity	0.018	0.018	0.020	0.022	0.036	0.047	0.023
Imperfection	0.013	0.013	0.014	0.016	0.025	0.032	0.016
Error area	10	10	13	16	22	34	16
Distribution, percent to washed coal (specific gravity fraction):							
Float-1.30	100.0	100.0	100.0	99.1	98.4	97.6	98.7
1.30-1.35	99.8	98.1	99.4	99.0	98.1	96.5	98.7
1.35-1.40	97.3	98.0	91.8	90.6	91.9	89.3	94.9
1.40-1.45	28.3	25.8	31.1	37.3	57.2	73.0	38.7
1.45-1.50	2.8	3.4	7.2	7.7	21.9	43.7	11.3
1.50-1.60	0.0	0.0	0.0	4.9	6.9	17.2	3.7
1.60-1.70	0.0	0.0	0.0	0.0	0.0	11.6	0.6
1.70-1.80	0.0	0.0	0.0	0.0	0.0	0.0	0.0
1.80-Sink	0.0	0.0	0.0	0.0	0.0	0.0	0.0

TABLE A-15. - Summary of the performance characteristics of the secondary dense-medium cyclone washer, plant F

Size, inches and mesh	3/4 by 1/2	1/2 by 3/8	3/8 by 1/4	1/4 by 8	8 by 14	14 by 28	3/4 by 28
Screen analysis, percent:							
Feed	23.9	13.6	17.9	23.3	17.0	4.3	100.0
Clean coal	18.7	12.2	16.6	25.9	20.7	5.9	100.0
Refuse	26.7	14.4	18.6	21.9	15.0	3.4	100.0
Ash, percent:							
Feed	66.3	64.8	62.2	56.4	53.0	50.4	60.1
Clean coal	18.6	17.5	16.4	15.4	14.2	13.2	16.0
Refuse	84.1	84.0	83.0	83.0	83.6	83.4	83.6
Actual recovery ... percent	27.1	28.9	31.2	39.4	44.1	47.0	34.7
Theoretical recovery ... do	27.1	29.0	31.2	39.5	44.3	48.1	34.9
Efficiency ... do	100.0	99.7	100.0	99.7	99.5	97.7	99.4
Ash error ... do	0.0	0.0	0.0	0.0	0.0	0.6	0.9
Float in refuse ... percent of product	0.9	1.2	1.2	2.1	2.6	4.4	1.4
Sink in clean coal ... do	3.8	3.1	2.2	2.4	3.0	2.7	3.6
Total misplaced material ... percent of feed	1.7	1.7	1.5	2.2	2.8	3.6	2.2
Near-gravity ±0.10 material ... do	7.4	8.5	7.9	9.3	8.2	8.2	8.6
Specific gravity of separation	1.64	1.63	1.62	1.63	1.66	1.73	1.63
Probable error, specific gravity	0.032	0.013	0.017	0.023	0.036	0.060	0.026
Imperfection	0.020	0.008	0.010	0.014	0.022	0.035	0.016
Error area	18	11	15	17	31	38	21
Distribution, percent to washed coal (specific gravity fraction):							
Float-1.30	100.0	100.0	100.0	100.0	100.0	99.3	99.8
1.30-1.35	100.0	100.0	100.0	100.0	100.0	99.5	99.9
1.35-1.40	100.0	100.0	100.0	100.0	100.0	99.0	99.9
1.40-1.45	100.0	100.0	100.0	99.6	99.6	98.5	99.8
1.45-1.50	100.0	100.0	99.1	99.3	99.3	97.3	99.4
1.50-1.60	100.0	97.5	94.5	93.9	94.2	93.5	95.7
1.60-1.70	50.4	34.0	23.5	35.5	59.9	76.9	43.0
1.70-1.80	2.2	1.0	2.2	1.5	13.1	38.5	5.3
1.80-Sink	0.0	0.0	0.0	0.0	0.1	0.9	0.0

TABLE A-16. - Summary of the performance characteristics of the dense-medium cyclone washer, plant G

Size, inches and mesh	5/16 by 1/4	1/4 by 8	8 by 14	14 by 28	5/16 by 28
Screen analysis, percent:					
Feed	2.8	67.9	24.8	4.5	100.0
Clean coal	1.7	67.4	27.1	3.8	100.0
Refuse	4.9	69.0	20.2	5.9	100.0
Ash, percent:					
Feed	40.8	22.9	27.9	39.4	25.5
Clean coal	5.1	3.9	3.5	3.5	3.8
Refuse	68.5	68.7	67.9	69.1	68.6
Actual recovery ... percent	43.7	70.6	62.1	45.2	66.5
Theoretical recovery ... do	44.9	71.9	65.5	52.3	68.6
Efficiency ... do	97.3	98.2	94.8	86.4	96.9
Ash error ... do	0.3	0.2	0.6	1.2	0.3
Float in refuse ... percent of product	3.8	7.4	10.1	11.7	8.0
Sink in clean coal ... do	2.4	1.1	1.6	2.6	1.4
Total misplaced material ... percent of feed	3.2	3.0	4.8	7.6	3.6
Near-gravity ±0.10 material ... do	23.2	13.2	9.9	8.2	12.6
Specific gravity of separation	1.43	1.45	1.46	1.45	1.45
Probable error, specific gravity	0.028	0.029	0.033	0.053	0.029
Imperfection	0.020	0.020	0.023	0.037	0.020
Error area	16	21	33	45	25
Distribution, percent to washed coal (specific gravity fraction):					
Float-1.30	99.2	98.8	95.8	88.9	97.9
1.30-1.35	98.8	98.7	95.5	89.8	98.0
1.35-1.40	92.5	94.8	90.7	79.0	93.4
1.40-1.45	47.4	70.5	75.0	63.4	69.2
1.45-1.50	5.6	27.5	37.6	36.1	28.0
1.50-1.60	0.4	6.4	13.5	14.1	8.1
1.60-1.70	0.0	1.2	5.6	6.2	2.4
1.70-1.80	0.0	1.3	3.7	4.9	2.0
1.80-Sink	0.0	0.2	0.3	0.5	0.3

INT.-BU.OF MINES,PGH.,PA. 17805