SUPERCRITCAL CARBON DIOXIDE (SCO_2) INDIRECT POWER CYCLES INCORPORATING FOSSIL-FUEL HEAT SOURCES

DOE/NETL-2016/1777

2014 Pittsburgh Coal Conference
October 6 - 9, 2014

Arun Iyengar - Booz Allen Hamilton
Charles White – Noblis
Wally Shelton, Kristin Gerdes - NETL

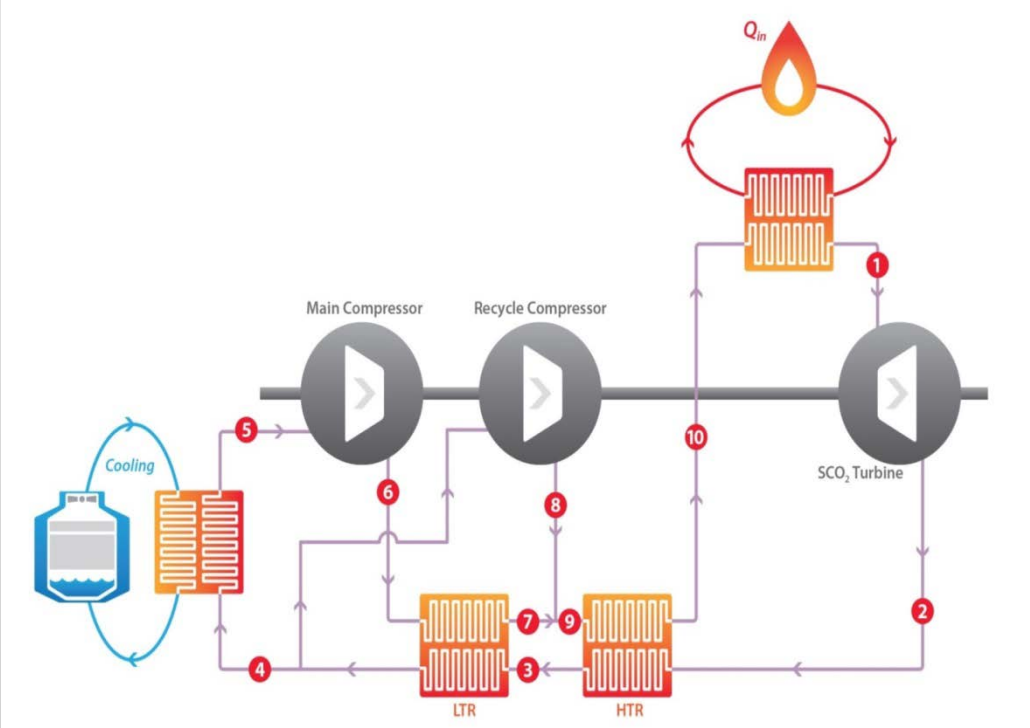

Supercritical CO_2 Cycles

- Introduction
- SCO_2 Recompression Brayton Cycle
- Screening of Fossil-based Heat Sources
- Potential Benefits for Coal-Based Indirect SCO_2 Cycles

Supercritical CO_2 Cycles

- Introduction
- SCO_2 Recompression Brayton Cycle
- Screening of Fossil-based Heat Sources
- Potential Benefits for Coal-Based Indirect SCO_2 Cycles

Why SCO_2 Cycles ?

- **Potential higher efficiency relative to traditional fossil energy cycles**
  - *SCO_2 has certain thermodynamic properties around the critical point that are beneficial (e.g. reduces recompression load)*
  - *Use of recuperators reduces cycle heat rejection*
- **Indirect cycles can be integrated with various heat sources**
  - *Nuclear, solar, geothermal, fossil (optimize at different T)*
- **Reduced turbomachinery equipment sizes due to supercritical pressures may result in reduced capital costs**
  - *Turbine at $<$ 1/10 of a steam turbine (same P and T)*
- **Single-phase working fluid**
  - *Fouling and other water quality concerns generally associated with the condensation and evaporation in a steam cycle can be avoided*
- **Low water consumption**
  - *The SCO_2 cycle can be made water-free by employing cycle temperatures that enable heat rejection through dry air-cooling*
- **CO_2 is readily available, non-toxic, non-flammable, and dry CO_2 is generally believed to be less corrosive than steam**
  - *SCO_2 may enable higher peak temperatures*
- **Synergies with material programs for advanced high temperature steam cycles**

SCO_2 Cycles – Indirect .vs. Direct

- **Indirect:**
  - CO_2 working fluid is used in a closed Brayton power cycles where heat input occurs using a heat exchanger or heat exchange surfaces
  - Cycles usually operates above the CO_2 critical point
  - Any CO_2 capture occurs outside of the indirect cycle
  - Heat sources include fossil, nuclear, solar, and geothermal

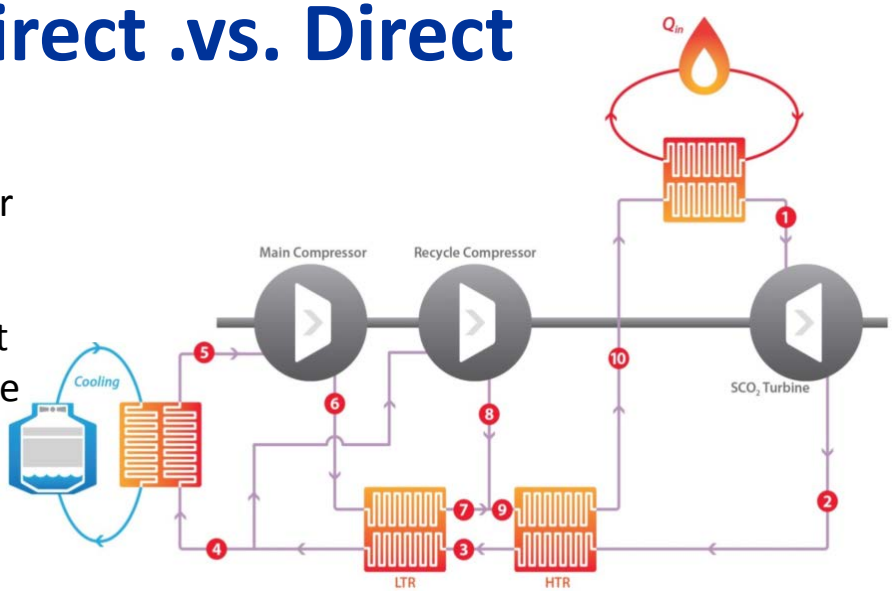

- **Direct:**
  - Recycling work fluid (primarily CO_2) gains heat by an oxy-combustion process directly with the fuel
  - Exhaust stream is sent to a turbine for power recovery
  - Recuperators/heat integration are used to transfer heat to recycling fluid
  - Requirement for removal of impurities/water from recycling fluid
  - CO_2 generated by combustion is removed for carbon capture at a high pressure as a slip stream from the recycling fluid
  - Heat sources are fossil-based

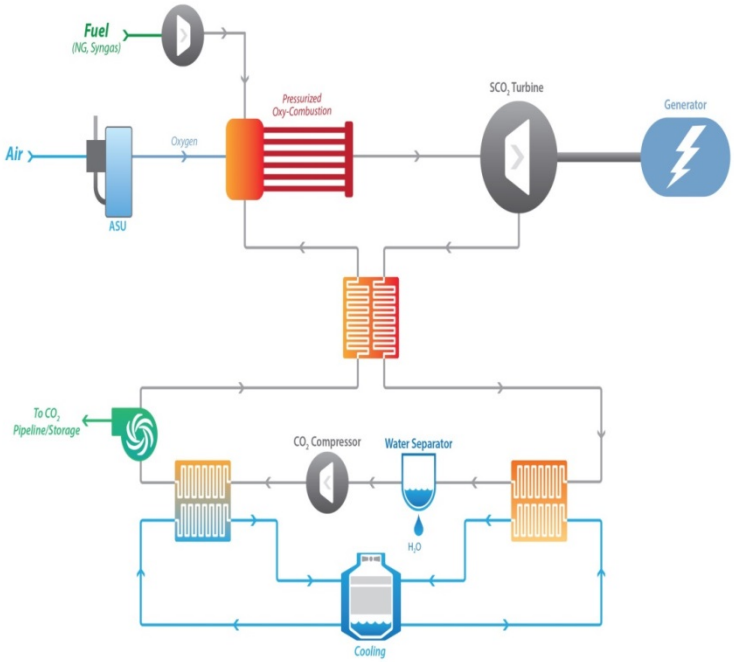

Indirect Brayton Cycles

Simple

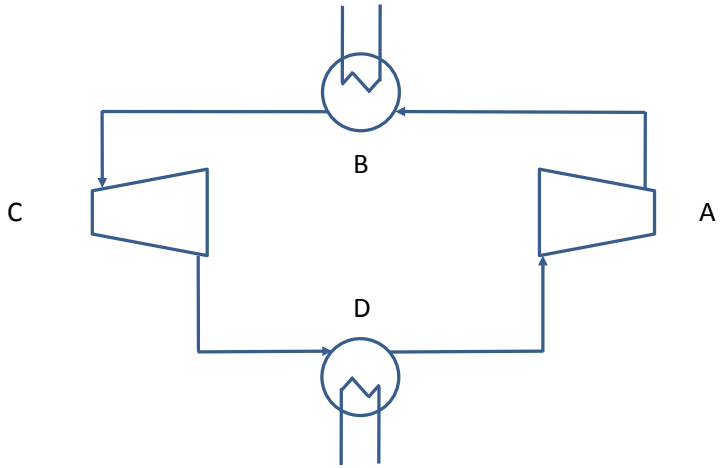

Recuperated

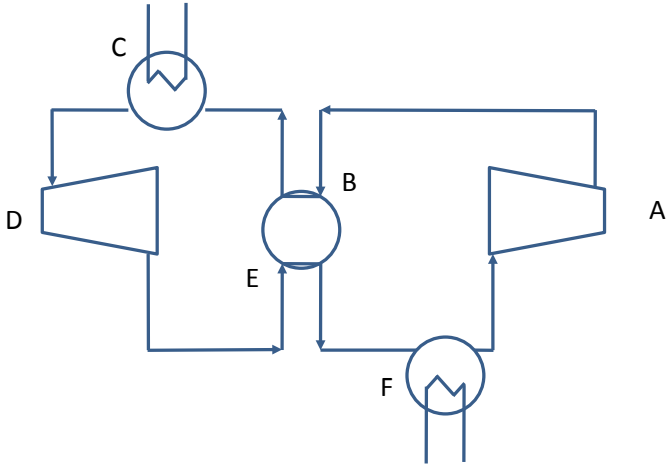

Recuperated, Recompression

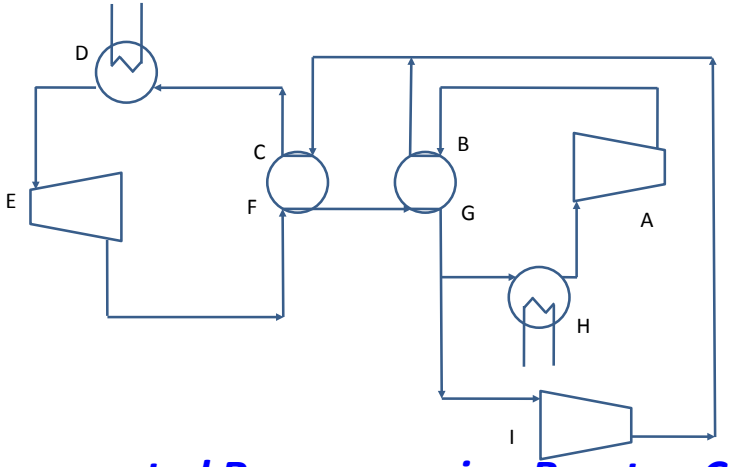

Two-Stage Recuperated, Recompression, Reheat

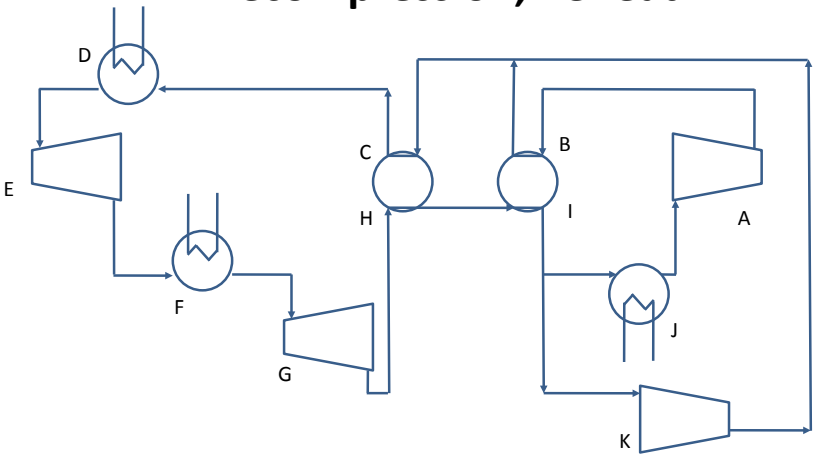

Recuperated Recompression Brayton Cycle is attractive - potential for high efficiencies at low cost

Supercritical CO_2 Cycles

- Introduction
- SCO_2 Recompression Brayton Cycle
- Screening of Fossil-based Heat Sources
- Potential Benefits for Coal-Based Indirect SCO_2 Cycles

Indirect Recompression Brayton Cycle

Baseline Cycle

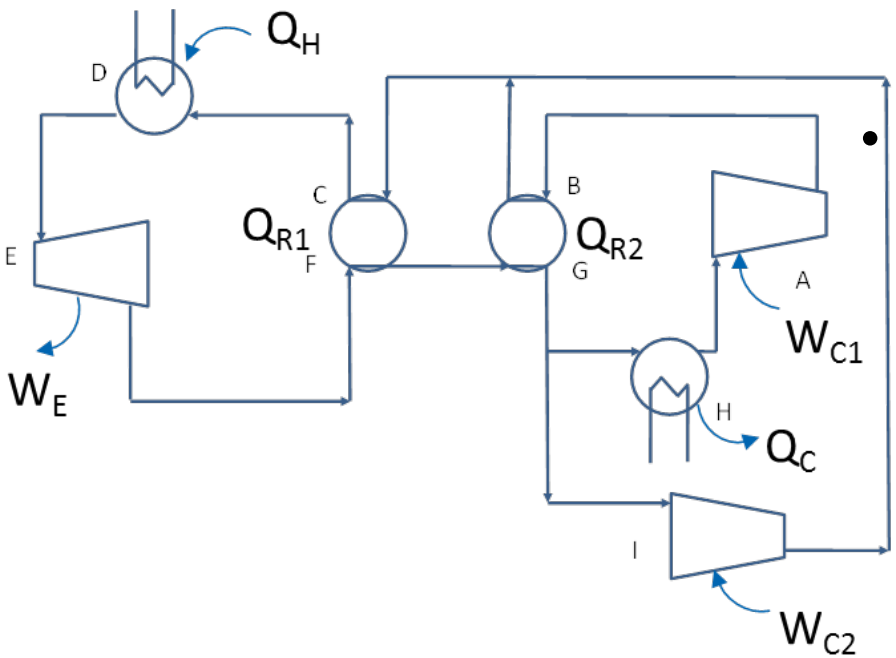

- **Cycle simulated in ASPEN PLUS**
  - Generic heat source (~64 MMBtu/hr)
- **Sensitivity of cycle efficiency to key cycle parameters was investigated to find high efficiency operating conditions that are stable and feasible**
  - Pressure ratio
  - Turbine inlet temperature (TIT)
  - Turbine isentropic efficiency ($\eta_{turbine}$)
  - Compressor isentropic efficiency (η_{comp})
  - Turbine exit pressure
  - Minimum recuperator temperature approach
  - CO_2 cooler bypass fraction
  - Cycle pressure drop
  - CO_2 cooler temperature

Indirect Recompression Brayton Cycle

Sensitivity Analysis

Parameter		Baseline	Sensitivity Ranges
Pressure ratio		3.9	1.5 - 8
Turbine inlet temperature	°C (°F)	700 (1292)	550 – 760 (1022 - 1400)
Turbine isentropic efficiency		0.927	0.75 – 1.0
Compressor isentropic efficiency		0.85	0.75 – 1.0
Turbine exit pressure	MPa (psia)	9.3 (1350)	(5.5 – 13.8) 800 – 2000
Minimum recuperator temperature approach	°C (°F)	5.6 (10)	0 – 22.2 (0 – 40)
Nominal CO_2 cooler bypass fraction		0.283	0 – 0.4
Cycle pressure drop	MPa (psia)	0.41 (60)	0 – 1.24 (0 – 180)
CO_2 cooler temperature	°C (°F)	35 (95)	32 - 45 (90 – 113)

Baseline cycle efficiency ~ 53%

Supercritical CO_2 Cycles

- Introduction
- SCO_2 Recompression Brayton Cycle
- Screening of Fossil-based Heat Sources
- Potential Benefits for Coal-Based Indirect SCO_2 Cycles

Matching Heat Sources to SCO_2 Cycle

T-Q Diagram for Conventional Coal-Based Systems and example Indirect SCO_2 Cycle

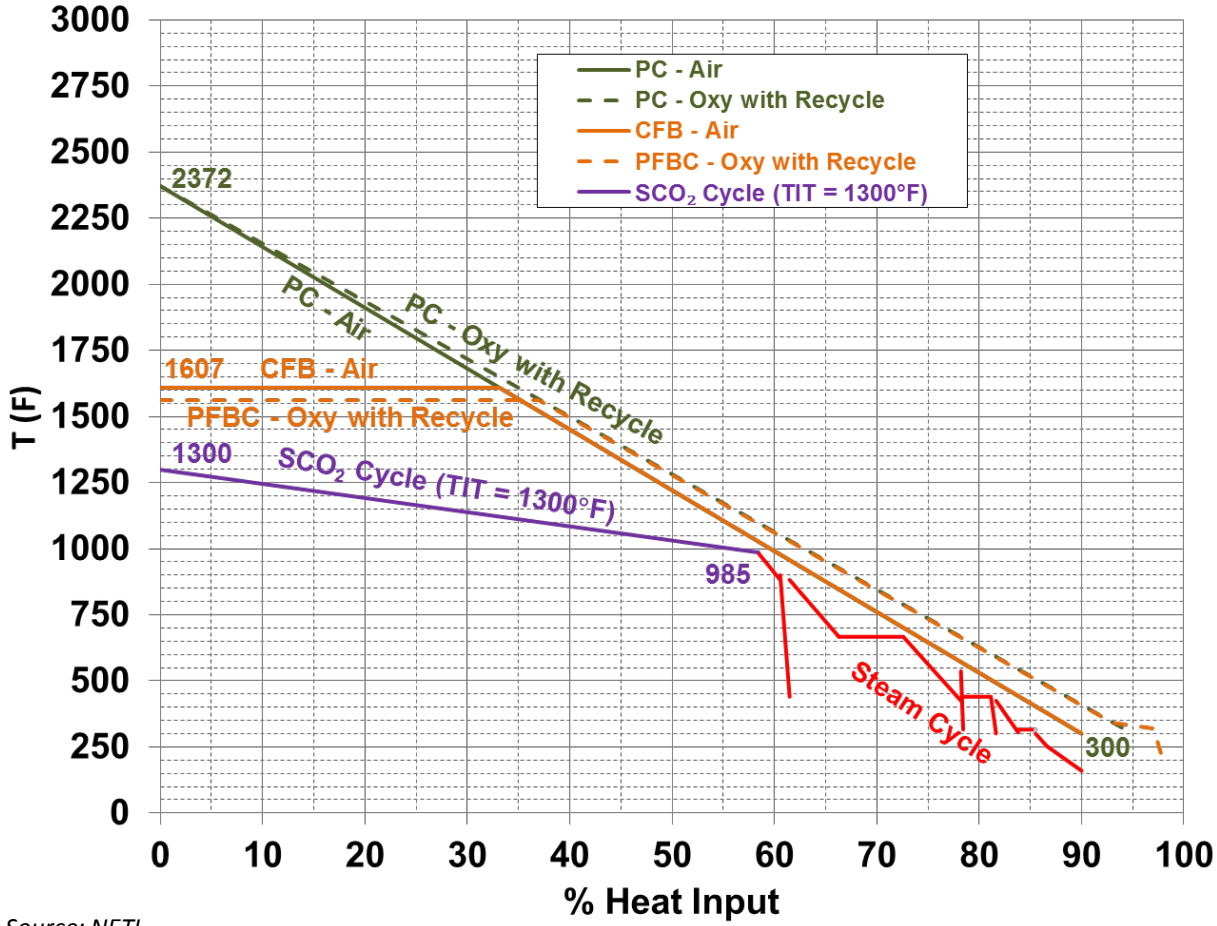

Source: NETL

- **SCO_2 cycle requires a relatively constant temperature heat source for maximum plant efficiency**
- **Conventional PC, CFB, and conventional oxy-combustion heat sources provide a heat source with a large slope of T versus Q.**
  - Steam Rankine cycles have been tuned to maximize the use of this heat source temperature profile.
- **Pairing these heat sources directly with the SCO_2 power cycle does not meet the objective of minimizing the bottoming cycle.**

Matching Heat Sources to SCO_2 Cycle

T-Q Profiles of Modified Coal-Based Systems

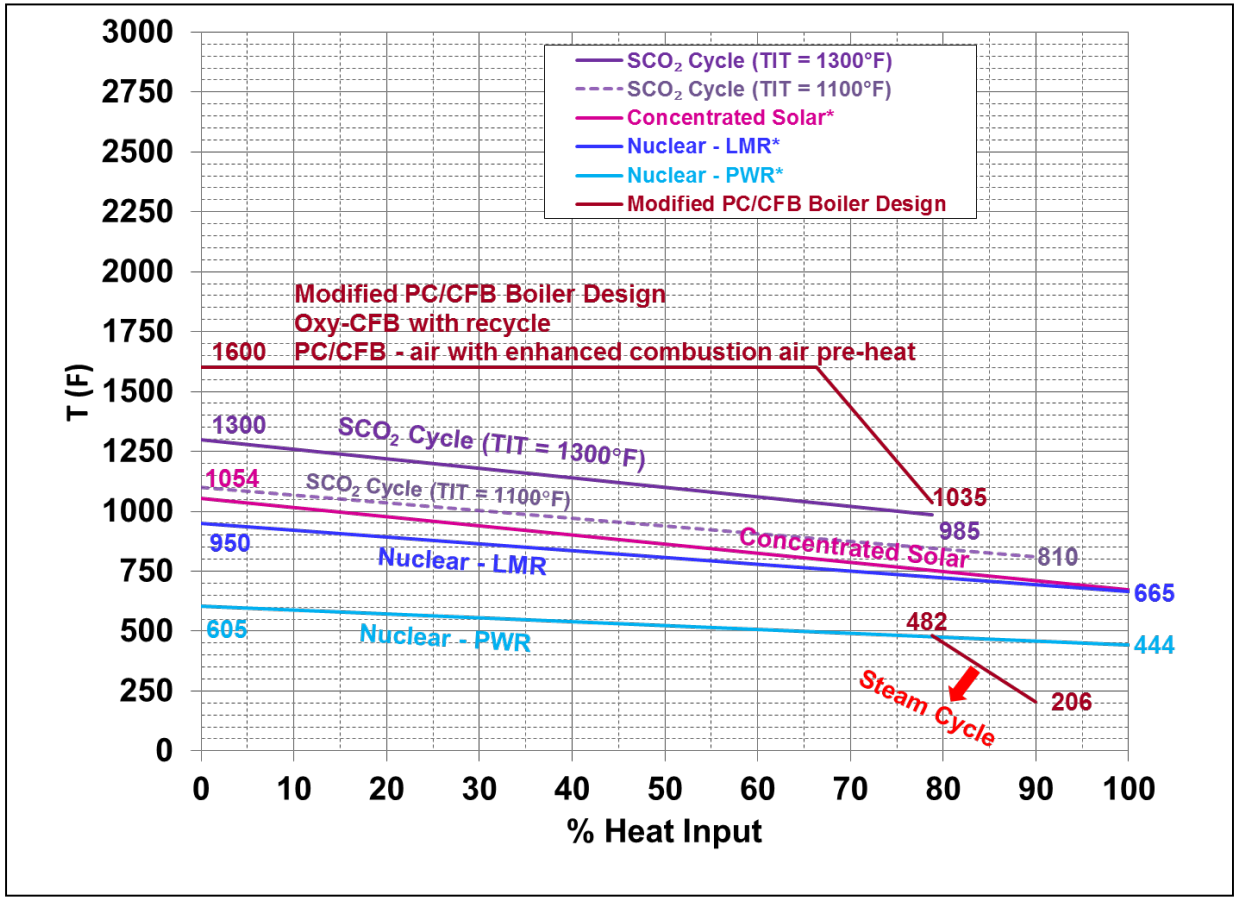

- **Adding enhanced preheat for combustion air or CO_2 recycle enables conventional PC, CFB, and PFBC air and oxy heat sources to be tailored to match the T versus Q profile required for a sCO_2 cycle.**

- **Modifications allow multiple coal-based systems (air, oxy, CFB, etc) to serve as a heat source for indirect SCO_2 power cycles while meeting the objective of minimizing the bottoming cycle.**

Supercritical CO_2 Cycles

- Introduction
- SCO_2 Recompression Brayton Cycle
- Screening of Fossil-based Heat Sources
- Potential Benefits for Coal-Based Indirect SCO_2 Cycles

Coal-Based Indirect SCO_2 Cycles

Potential Benefits

- **Applicable to multiple coal-based platforms (air and oxygen-fired, PC, CFB, PFBC)**
  - Coal combustor modifications (and associated costs) needed to match temperature-enthalpy profile of SCO_2 cycles of interest
- **Substantial efficiency improvements anticipated as shown in table below**
  - Varies based on temperature, specific cycle configuration and heat integration
- **Significant cost uncertainties associated with SCO_2 power island (eg. recuperators) and combustor modifications**
  - Requires use of sensitivity analysis to assess the impact of cost of these sub-systems
- **Result: SCO_2 cycles may provide 5-15% reduction in COE**
  - Compare to CCRP target of 20% *(consistent with $40/tonne cost of CO_2 capture)*
  - Gap to target met by advances such as 2nd Gen post-combustion capture, ASU, CO_2 purification, etc.

Power Cycle	Net Plant HHV Efficiency Improvement	COE Change Attributable to Advanced Power Cycle	
	• in coal plants with 90% capture • relative to SC steam cycle[1]	Low Cost[3]	High Cost[3]
AUSC Steam[2] 760°C (1400°F)	+3.5%pts	-7 to -8%	+1 to -0%
SCO_2 650°C (1200°F)	+3 to 5%pts	-6 to -11%	+2 to -3%
SCO_2 760°C (1400°F)	+5 to 8%pts	-10 to -16%	-2 to -9%

[1]SC = Supercritical 3500 psig/1100°F/1100°F
[2]AUSC = Advanced ultrasupercritical 5000 psig/1400°F/1400°F consistent with program targets
[3]"Low Cost" assumes combustor + power island costs same as SC steam case;
"High Cost" assumes these sub-systems cost 40% more than for SC steam

No reduction
0 to 8%
> 8%

Coal-Based Supercritical CO_2 Cycles

Cost Uncertainties

- **Minimal information available on SCO_2 power island costs**
  - Turbomachinery expected to have lower costs due to lower pressure ratios and greater power density of SCO_2 relative to steam cycles
  - Configurations achieving high efficiency requires use of recuperators with large heat transfer areas; costs for recuperators are under investigation including identifying novel technologies
    - eg. Microchannel heat exchangers that have 20-100 times greater compactness factor (heat transfer area to volume ratio) than conventional shell and tube exchangers
  - In general, achieving higher efficiencies requires additional cost (i.e. advanced materials, complex cycles with more equipment, lower temperature approaches requiring larger heat exchangers, etc.)
- **Modifications to base coal plant anticipated for most configurations which will likely increase cost of the combustor and associated heat transfer piping**
- **Cost sensitivity approach for this analysis*:**

	Adv. System Cost (Power Island + Coal Combustor) / Ref. System Cost (Power Island + Coal Combustor)
Low	100%
High	140%

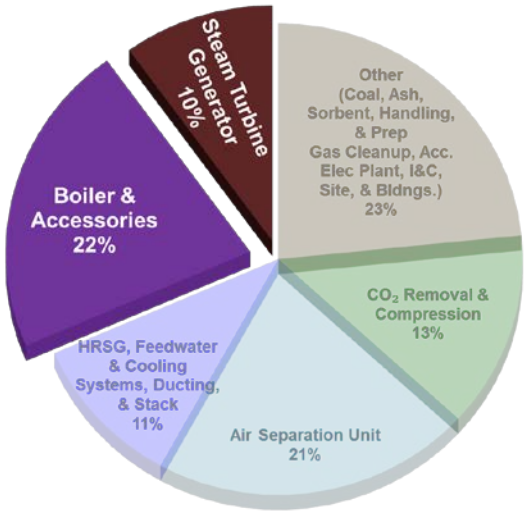

**Assumes all cost changes in total plant cost come from power island and coal combustor cost, which represent 32 % of the total plant cost of the reference SC oxycombustion system*

Cost-Efficiency Trade-off for Adv. Power Cycles

Cost of Electricity

Reference: SOA SC Oxy-combustion

$0/tonne CO_2 Revenue

550 MW

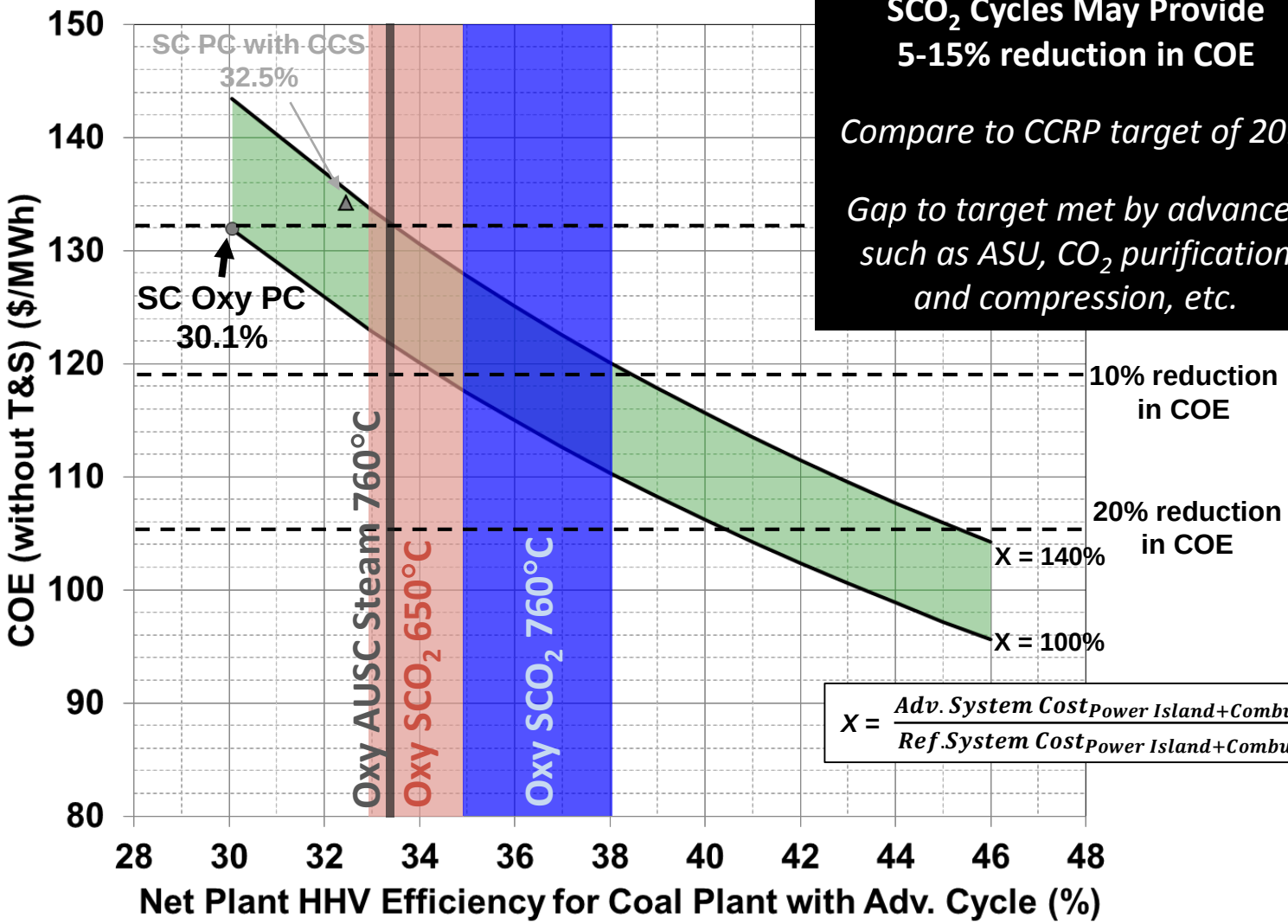

SCO_2 Cycles May Provide 5-15% reduction in COE

Compare to CCRP target of 20%

Gap to target met by advances such as ASU, CO_2 purification and compression, etc.

$$X = \frac{Adv.\ System\ Cost_{Power\ Island+Combustor}}{Ref.System\ Cost_{Power\ Island+Combustor}}$$

Source: NETL

Indirect SCO_2 Power Cycle Analyses
Conclusions

- **Indirect SCO_2 power cycles have the potential for significant efficiency gains over conventional steam cycles; key parameters include:**
  - Configuration (recuperation, etc.)
  - Temperature
- **Indirect SCO_2 power cycles are applicable to multiple coal-based platforms, but require some modifications to match the temperature-enthalpy profile**
- **Costs associated with SCO_2 cycles are uncertain and require further investigation**
- **Coal-based SCO_2 cycles have the potential to provide a 5-15% reduction in the COE**
  - Given costs between 0 and 40% greater than the conventional boiler/combustor and power island

Scope of NETL - SCO_2 Power Cycle Analyses

- **Current Analyses**
  - Fundamental, heat source-independent thermodynamic analyses (complete)
  - Screening of fossil-based heat sources for indirect SCO_2 cycles (preliminary results complete)
  - Preliminary analysis on potential benefits of coal-based indirect SCO_2 power cycles (complete)
  - Full plant thermodynamic analysis of coal-based indirect SCO_2 cycles (early stages)
  - Review of third-party studies including validation and review of simulation models (ongoing)
- **Future Analyses**
  - Cost analysis of fossil fuel-based SCO_2 cycles
  - Full plant thermodynamic analysis of direct SCO_2 cycles

Thank you for your attention!

Contact info:

Arun K.S. Iyengar
Associate, Booz Allen Hamilton
626, Cochrans Mill Road
Pittsburgh, PA 15236-0940
Ph: (412) 386-5860
Fax: (412) 386-5917
Arun.Iyengar@CONTR.NETL.DOE.GOV

Charles W. White
Research Engineer Manager, Noblis, Inc.
3150 Fairview Park Drive South, Falls Church, VA 22042-7659
Ph: (703) 610-2820
Fax: (703) 610-2000
Charles.White@noblis.org

Wally W. Shelton
Chemical Engineer, OPPB, U.S. DOE - NETL
3610 Collins Ferry Rd.,
Morgantown, WV, 26507-0880
Ph: (304) 285-4209
Fax: (304) 285-0240
Walter.Shelton@NETL.DOE.GOV

Kristin J. Gerdes
Director, OPPB, U.S. DOE - NETL
3610 Collins Ferry Rd.,
Morgantown, WV, 26507-0880
Ph: (304) 285-4894
Fax: (304) 285-0240
Kristin.Gerdes@NETL.DOE.GOV