NATIONAL ENERGY TECHNOLOGY LABORATORY

Supercritical CO_2 Power Cycles Literature Survey

Activity 341.02.04

December 12, 2012 – Project Review

U.S. DEPARTMENT OF ENERGY

Literature Survey Scope

(Stand-alone supercritical CO_2 power cycle(s) coupled with heat sources of different temperatures/scales)

- **Identify possible systems for evaluation based on the following heat sources**
  - PFBC
  - Nuclear
  - Solar Thermal
  - Waste heat
- **Outline how the heat source is currently or proposed to be used in a process**
- **Identify what information is available**

Basic Supercritical CO_2 Plant Concept

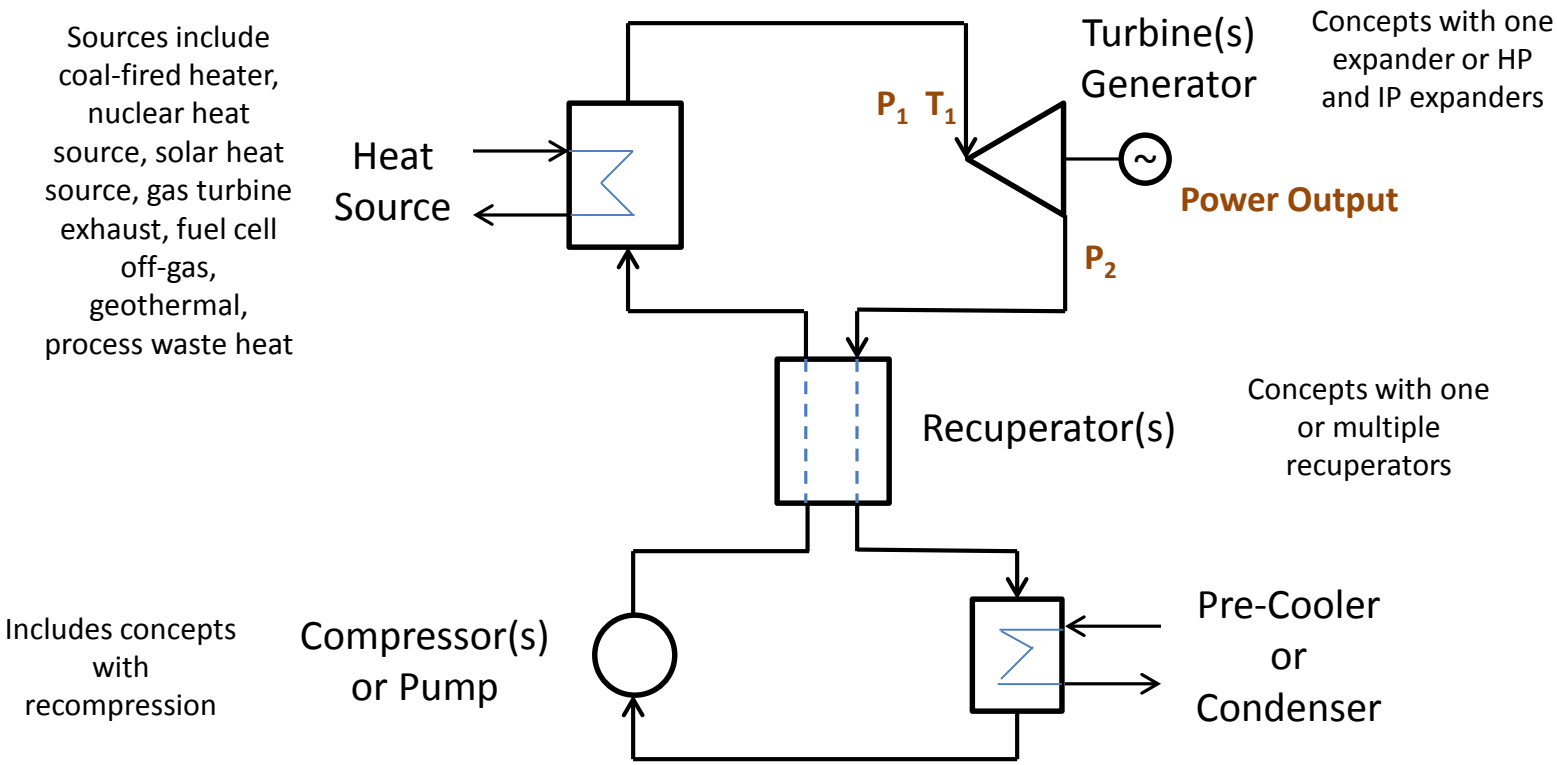

- **Multiple choices to consider for the design of a sCO_2 cycle – for example:**
  - Turbine inlet temperature, pressure
  - Turbine pressure ratio
  - Operation entirely or partly above the critical pressure
  - Intercooling, reheating, recompressing

Overview

- **Supercritical CO_2 cycles proposed in late 1940s**
- **1976 ECAS Study: important to understand assumptions since conclusions did not lead to attractive sCO_2 cycle**
- **65 recent documents reviewed**
  - Majority of work focused on nuclear or solar heat source
  - Studies find operation near critical point results in increased efficiency and reduced size turbomachinery
  - Mixed messages on use of recuperators for efficiency gain
- **Test Facilities – focused on turbine development**
  - Sandia: 240 kWe and 80 kWe
  - U.S. Naval Reactors Program: 104 kWe and planned 1-3 Mwe
  - Czech Nuclear Research Institute: constructing 500 kWt facility and planned 2-3 MWe

Results from 1976 NASA ECAS study

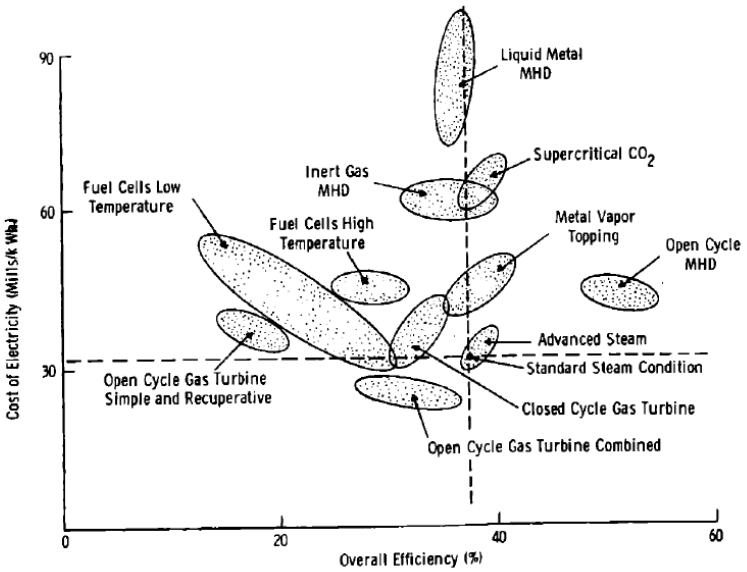

Source: NASA

Most of the Efforts Thus Far Are Designed To Utilize High-grade Heat Sources to Power the sCO_2 Cycle

Heat Source Quality	Technology Investigator	Heat Source	Turbine Inlet Temperature (˚C)	Turbine Inlet Pressure (MPa)	Pressure Ratio	SCO2 Cycle Efficiency	Net Cycle Power Output	Unique Features	Benefits
High Grade (>500˚C)	PWR	PFBC	700	20.68	2.6	49.9% (cycle) 38.3% (plant)	544 MWe		
	NREL	Solar Power Tower	700	22	2.6	38.3%	5-10 MWe	Energy Storage	
	Sandia	Gas Fast Reactor	650	20	2.7	45 – 50%	200 MWth	Utilizes natural convection	▪ Increased core life ▪ No Na-H20 reaction potential ▪ Lower core reprocessing costs
	EPRI	Coal-fired boiler	600	7.58	2 – 4	—	400 – 800 MWe		
	KAIST	Small Modular Water Cooled Reactor	550	20	2.6	40%	330 MWth		
	KAIST	Sodium Fast Reactor	550	20	2.08 – 2.64	44.02 – 46.65%	264.1 – 279.9 MWe	Comparison of mixing other gases with sCO2	

Note 1: Heat ranges are assumed based on traditional power plant configuration heat uses
Note 2: Pressure ratio is based on turbine inlet-outlet conditions

Most of the Efforts Thus Far are Designed to Utilize High-grade Heat Sources to Power the sCO_2 Cycle

Heat Source Quality	Technology Investigator	Heat Source	Turbine Inlet Temperature (˚C)	Turbine Inlet Pressure (MPa)	Pressure Ratio	SCO2 Cycle Efficiency	Net Cycle Power Output	Unique Features	Benefits
High Grade (>500˚C)	Sandia	Immersion Heaters	536	13.98	1.81	—	52.8 kWe	Operating Test Loop	
	Barber-Nichols	Unspecified	400-650	22	2	—	12.2 MWe		
Intermediate Grade (200˚C – 500˚C)	Abengola	Solar Parabolic	500	40	2.7	25% (power) 65% (thermal)	2.4 MWe	Energy Storage	
	Concepts NREC	Gas Turbine Exhaust	480	24.65	2.75	40 – 50 % (Improvement over GT 20 – 24%)	1,520 kWe	Utilizes Thermoelectric Generators	
	Kumar	Concentrated Solar Thermal	480	19.8	7.5	32.14%	5.6 kWe	Includes Ammonia Chiller	
	Univ. of Seville	MCFC	375	21.6	3	39.9%	583.6 kWe		
	Echogen	Waste Heat	200-540	—	—	—	0.25 – 50 MWe		
Low Grade (<200˚C)	Oak Ridge / Univ. S. Fla	Geothermal/ Waste Heat /Solar	120	30	5	16.5	—	Comparision of htfs for low grade applications	R32 is more efficient for low grade

Note 1: Heat ranges are assumed based on traditional power plant configuration heat uses
Note 2: Pressure ratio is based on turbine inlet-outlet conditions

Cycle Concepts: Turbine Inlet Temperatures

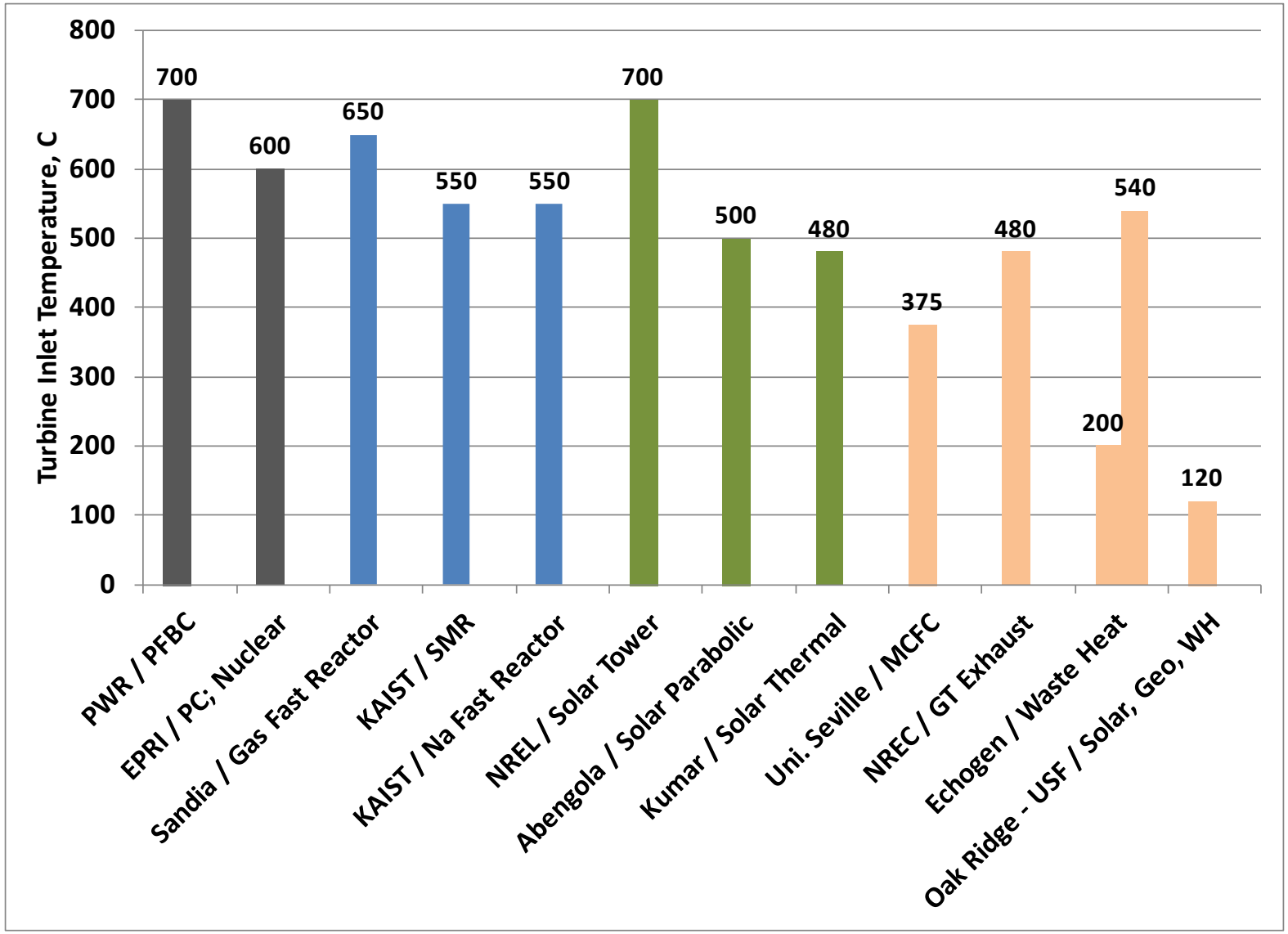

Cycle Concepts: Turbine Inlet Pressures (MPa)

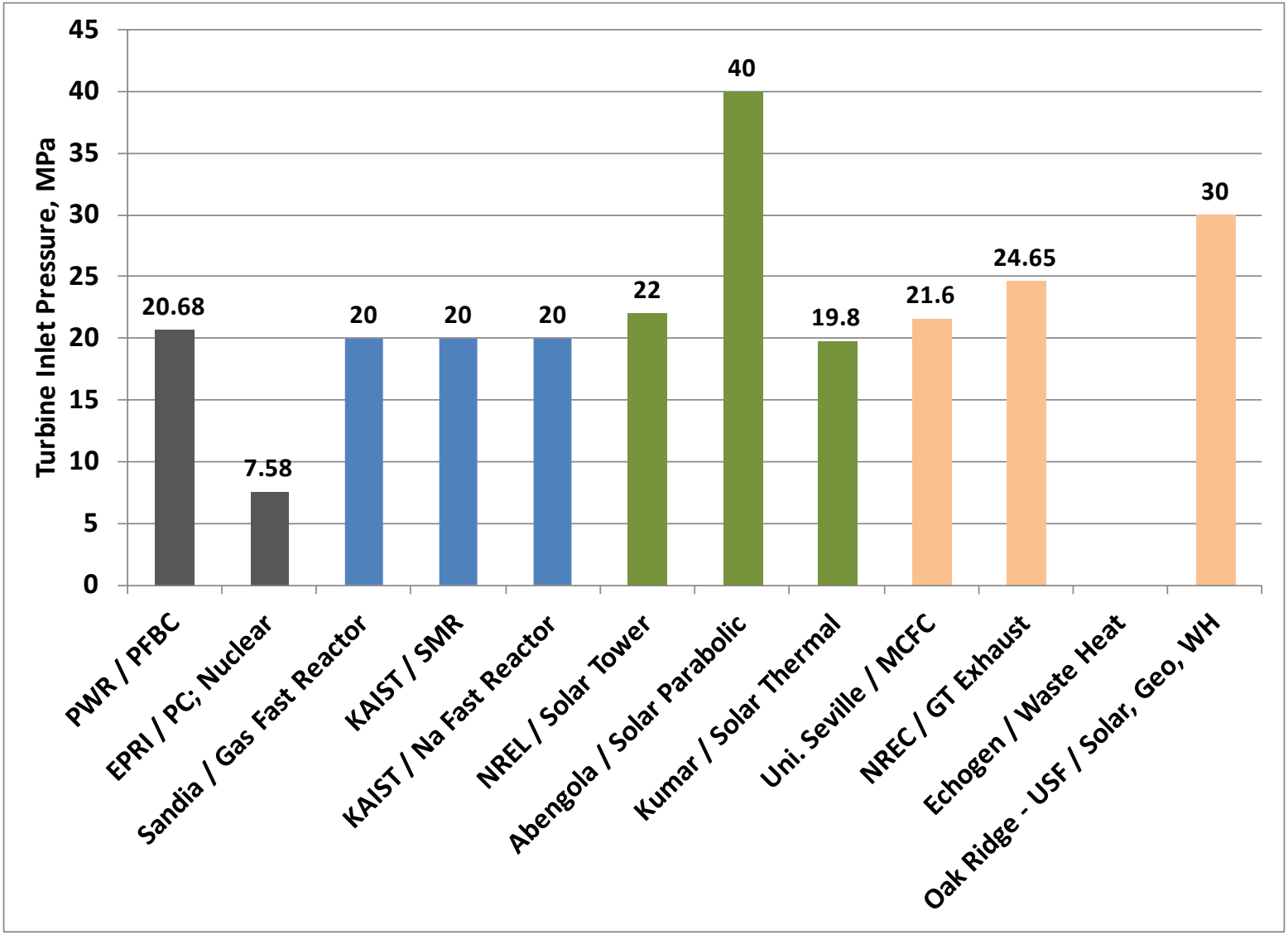

Cycle Concepts: Turbine Inlet Pressures (psi)

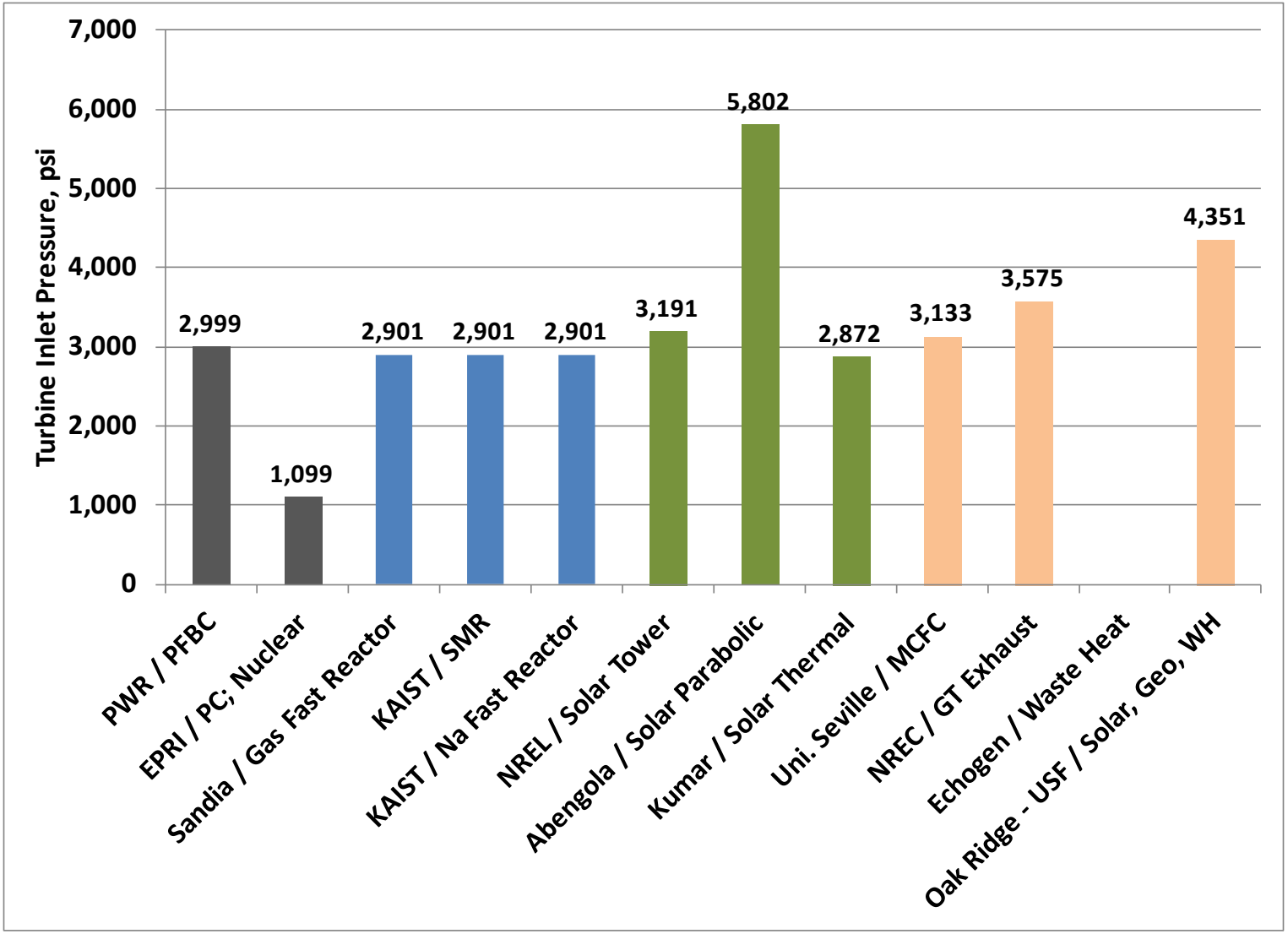

Cycle Concepts: Turbine Pressure Ratio

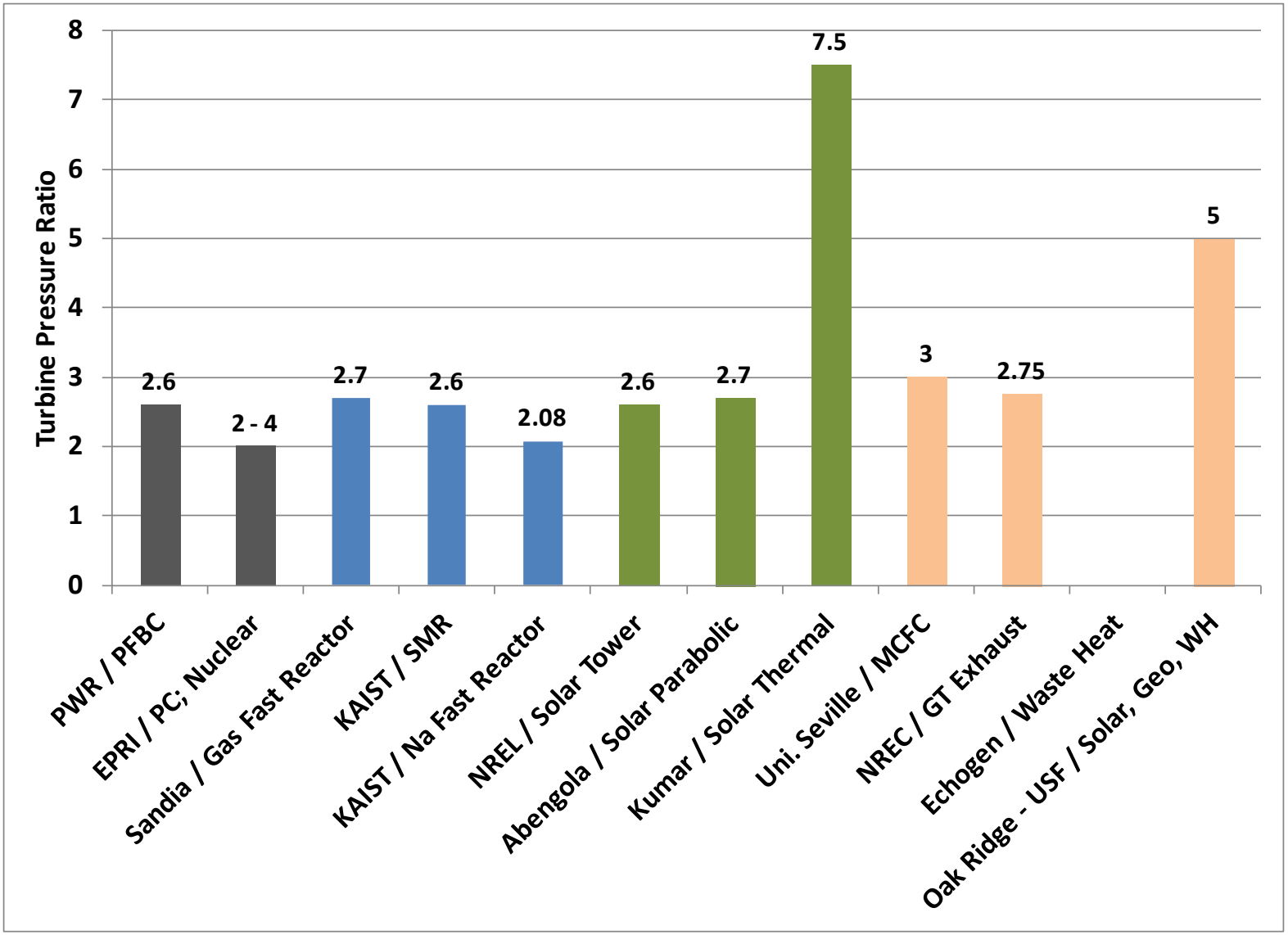

Pratt & Whitney Rocketdyne: Turbine Technology Program Phase II: sCO_2 Turbomachinery Configuration and Control Trade Study

- **Heat source: Oxy-fueled pressurized fluidized bed combustor (coal) (Zero Emission Power and Steam [ZEPS] plant)**
- **sCO_2 system designed to operate at 700 degC and 20.68 MPa with a mass flow rate of 5,724.34 kg/sec**
  - sCO_2 stream is split into two streams with 32.7% feeding the compressor turbine and the remaining 67.3% feeding the generator turbine
- **System designed for installation at a 550 MW oxy-fueled PFBC firing Illinois #6 coal at 52.39 kg/sec and limestone at 7.46 kg/sec with 98.33% purity oxygen at 107.5 kg/sec and recycled CO_2 at 317.51 kg/sec**
- **Power plant system flue gas pressurized to 15.51 MPa for sequestration**
- **Document contains many design and operational curves**
  - **System utilizes two compressors, three heat exchangers, and two recuperators**
- **Analysis indicates a potential for two-phase flow within the main compressor during start-up and shutdown unless compressor inlet temperature and pressure are held constant at 32.41 degC and 7.75 MPa**
  - Inlet pressures below 7.58 MPa have a risk of condensation in the main compressor
  - To avoid two-phase flow, PWR recommends using only 2% CO_2 flow during startup of PFBC and recuperators until bed temperature reaches safe coal-combustion temperatures
- **Document addendum expands analysis and indicates an estimated 20% LCOE reduction through use of sCO_2 system**
- **Analysis assumes:**
  - Turbine efficiency of 90% and compressor efficiency of 85%
  - Estimates sCO_2 cycle power output of 228 MW

Pratt & Whitney Rocketdyne: Turbine Technology Program Phase II: sCO_2 Turbomachinery Configuration and Control Trade Study

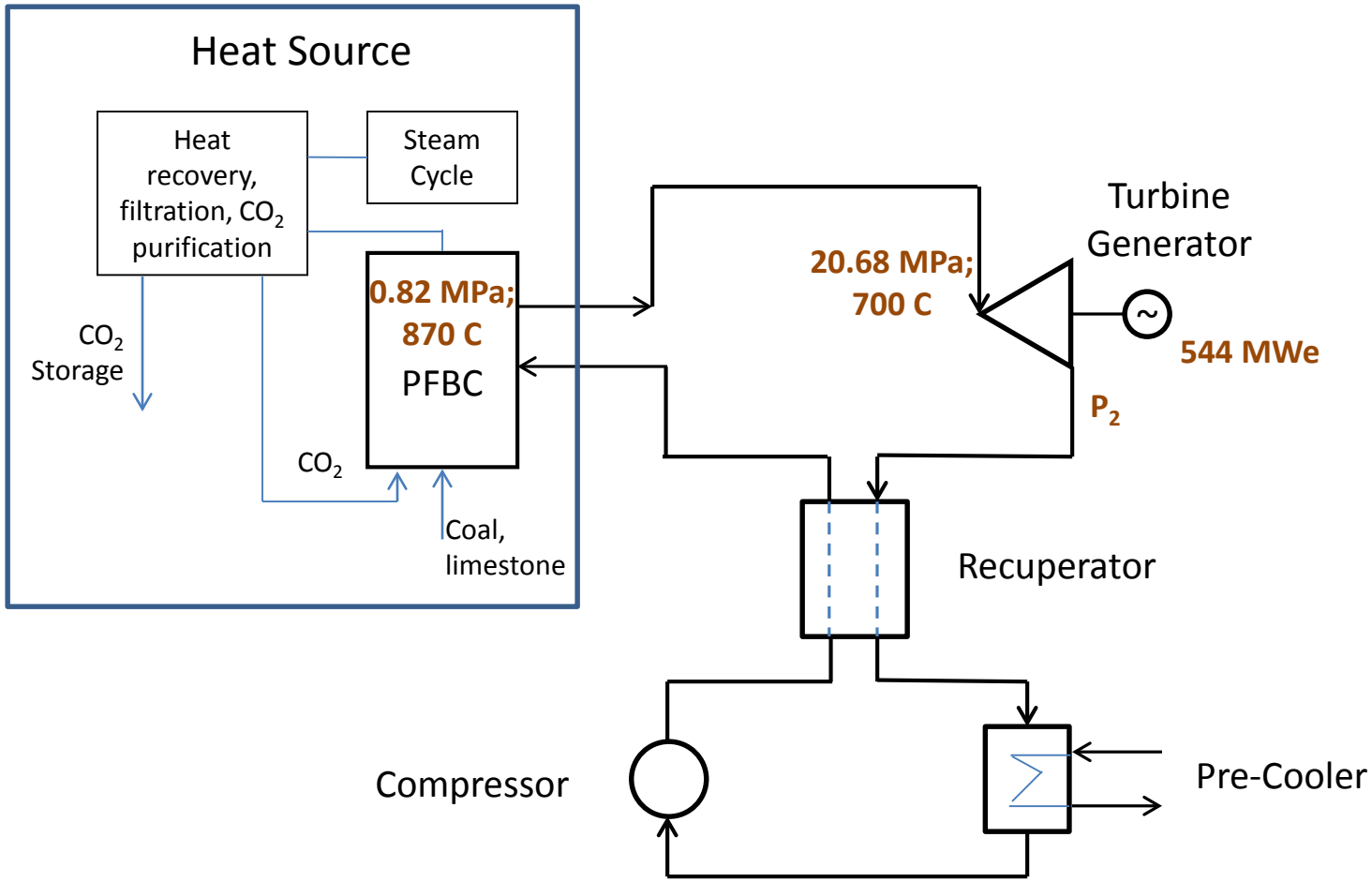

National Renewable Energy Laboratory: Supercritical CO_2 for Application in Concentrating Solar Power Systems

- **Heat source: Concentrating solar plant**
- **Proposed system utilizes a closed-loop Brayton cycle with recompression**
- **Analysis identified a recompression ratio of 2.6 as nearly ideal**
- **Using either parabolic trough or power tower to provide energy for loop operation, the turbine inlet conditions would be 20MPa at 470 degC**
  - Calculated turbine efficiency of 38.3%
- **Document contains a table comparing advantages and disadvantages of different heat transfer fluids for use in the system (next slide)**

National Renewable Energy Laboratory: Supercritical CO_2 for Application in Concentrating Solar Power Systems

Qualitative comparison of solar power heat transfer fluids

Heat Transfer Fluid	Advantages	Disadvantages
Synthetic Oil	• Proven (current state-of-the-art) •Moderate operating pressure (~15 bar)	•Expensive •Flammable •Limited to <400°C max temperature •H_2 degradation product degrades plant efficiency
Molten nitrate salt	•Ambient pressure operation •Temperature to ~600°C possible •Industrial use •Direct molten salt storage possible	•Requires elaborate freeze protection •Moderately expensive •Corrosive (especially for seals)
Direct steam generation	•Inexpensive •Nontoxic •No upper temperature limit •Direct use in Rankine cycle power block possible •Common industry use	•High pressures in field •Phase-change adds complexity to system design and control •Multi-hour storage options unproven
Supercritical CO_2	•Inexpensive •Nontoxic •No upper temperature limit •Direct use in Brayton Cycle power block possible •Brayton cycle has smaller power block mass and less complexity vs. Rankine cycle •Single phase throughout system •Can use sensible-heat thermal storage (indirect molten salt)	•High pressures in field •Unproven (under development for nuclear power industry)

Used with permission from Craig Turchi, NREL

National Renewable Energy Laboratory: Advanced Supercritical CO_2 Power Cycle Configurations for Use in Concentrating Solar Power Systems

- **Heat source: Concentrating solar plant**
- **Use of sCO_2 as heat transfer fluid removes existing temperature limits from the use of synthetic oil**
- **Integrating a molten salt thermal energy storage system allows the generator to shift power to peak hour and reduce weather impact with less energy loss than occurs using synthetic oil**

National Renewable Energy Laboratory: Advanced Supercritical CO_2 Power Cycle Configurations for Use in Concentrating Solar Power Systems

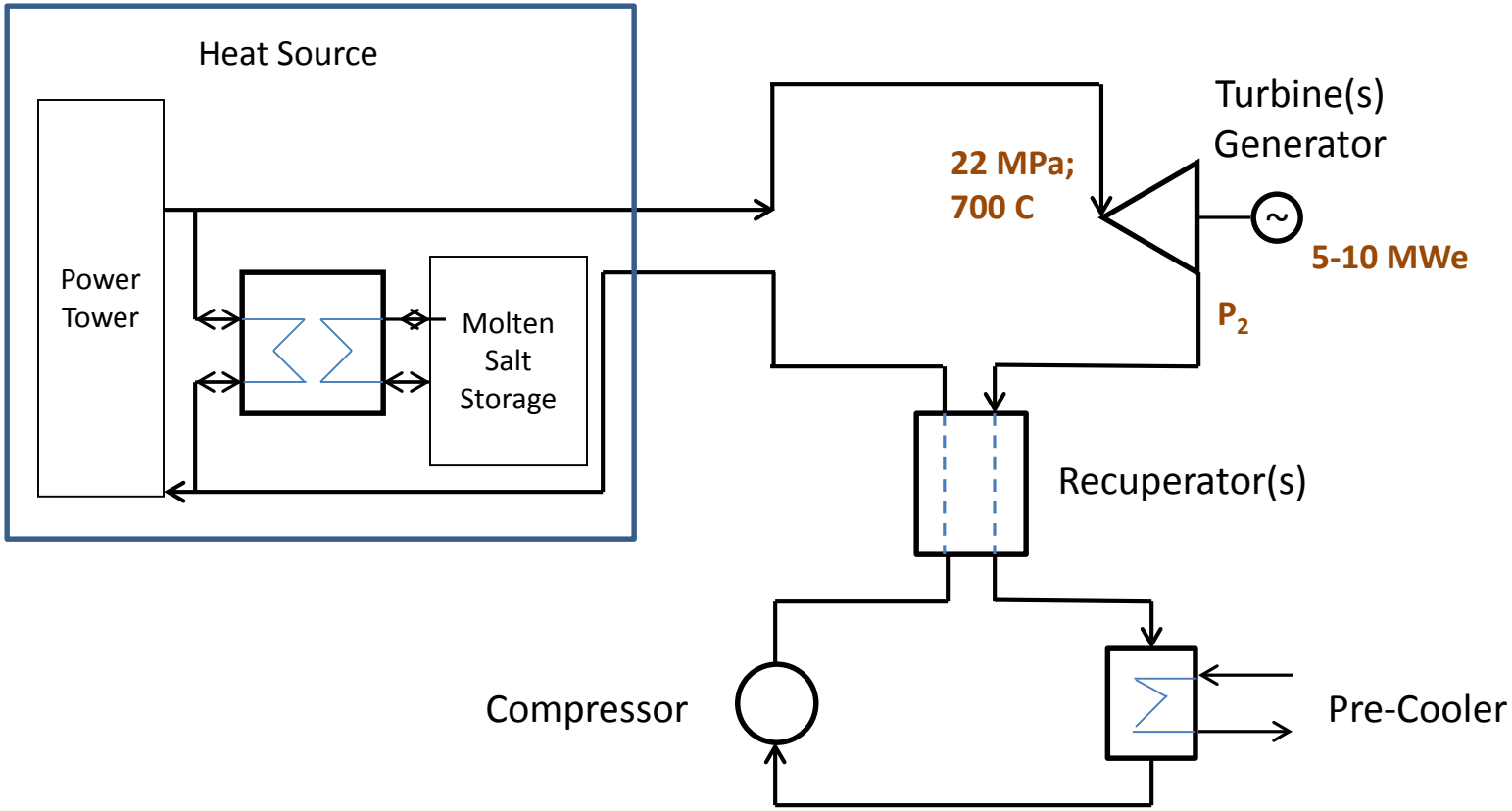

Sandia National Labs/Texas A&M/Computational Engineering Analysis: Supercritical CO_2 Direct Cycle Gas Fast Reactor (SC-GFR) Concept

- **Heat source: Gas fast reactor**
- **Study utilizes sCO_2 as the coolant in a direct cycle gas fast reactor**
  - sCO_2 flows from reactor vessel at ~650 degC into the turbine-generator
  - Cycle efficiency between 40-50% is theoretically achievable
- **Advantages of using sCO_2 as the coolant include:**
  - High thermal efficiency
  - Compact system design
  - Inexpensive, non-flammable, inert nature of CO_2
  - Natural convection heat removal
  - Removes need for intermediate heat exchangers or recirculators
  - Increases core life

Sandia National Labs/Texas A&M/Computational Engineering Analysis: Supercritical CO_2 Direct Cycle Gas Fast Reactor (SC-GFR) Concept

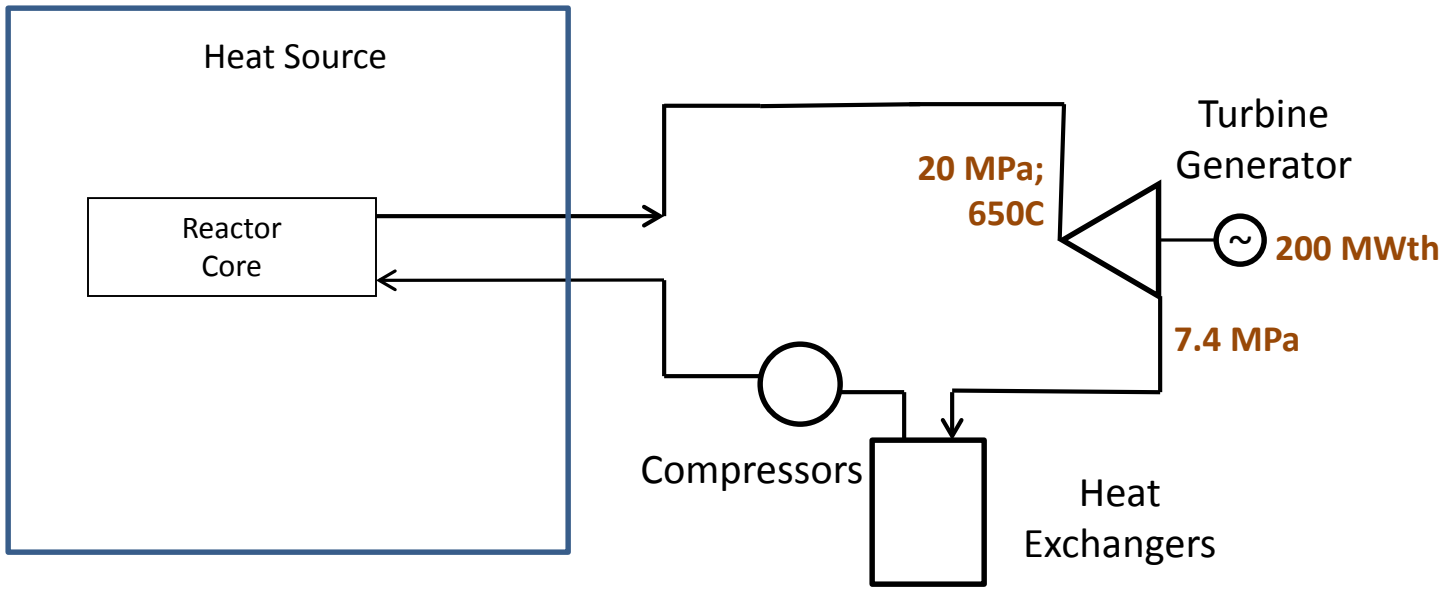

EPRI: Modified Brayton Power Cycle Using Supercritical CO_2 as the Working Fluid

- **Document is primarily an overview of previous work completed by other organizations, with the exception of a discussion on sCO_2 cycle application in coal-fired power plants**
- **Heat sources: Gen IV nuclear and coal-fired units**
- **Use of sCO_2 as reactor coolant increases power cycle efficiency due to close proximity of reactor moderating density to critical density of CO_2**
- **Theoretical analyses for application in new coal-fired power plants indicate:**
  - Increased cycle efficiency resulting in lower dispatch costs and a lower LCOE
  - Significantly lowered capital costs
  - Significantly better environmental performance due to increased cycle efficiency
- **A new coal-fired power plant with an sCO_2 Brayton power cycle would include the following component differences from a steam Rankine cycle plant:**
  - Steam boiler replaced by a coal-fired CO_2 heater
  - Steam turbine-generator replaced by an sCO_2 turbo-generator
  - Steam condenser replaced by an sCO_2 cooler
  - Feedwater heaters and pumps replaced with sCO_2 compressors
  - sCO_2 recuperators would be added
  - Boiler feedwater make-up and treatment replaced by CO_2 inventory management system
- **A repowered coal-fired power plant could be reconfigured with an sCO_2 power cycle replacing the existing topping cycle with the following changes:**
  - Steam boiler replaced by a fired sCO_2 heater
  - A topping sCO_2 turbo-compressor-generator would be added
  - Steam for existing steam turbo-generator generated by cooling turbine exhaust sCO_2

EPRI: Modified Brayton Power Cycle Using Supercritical CO_2 as the Working Fluid

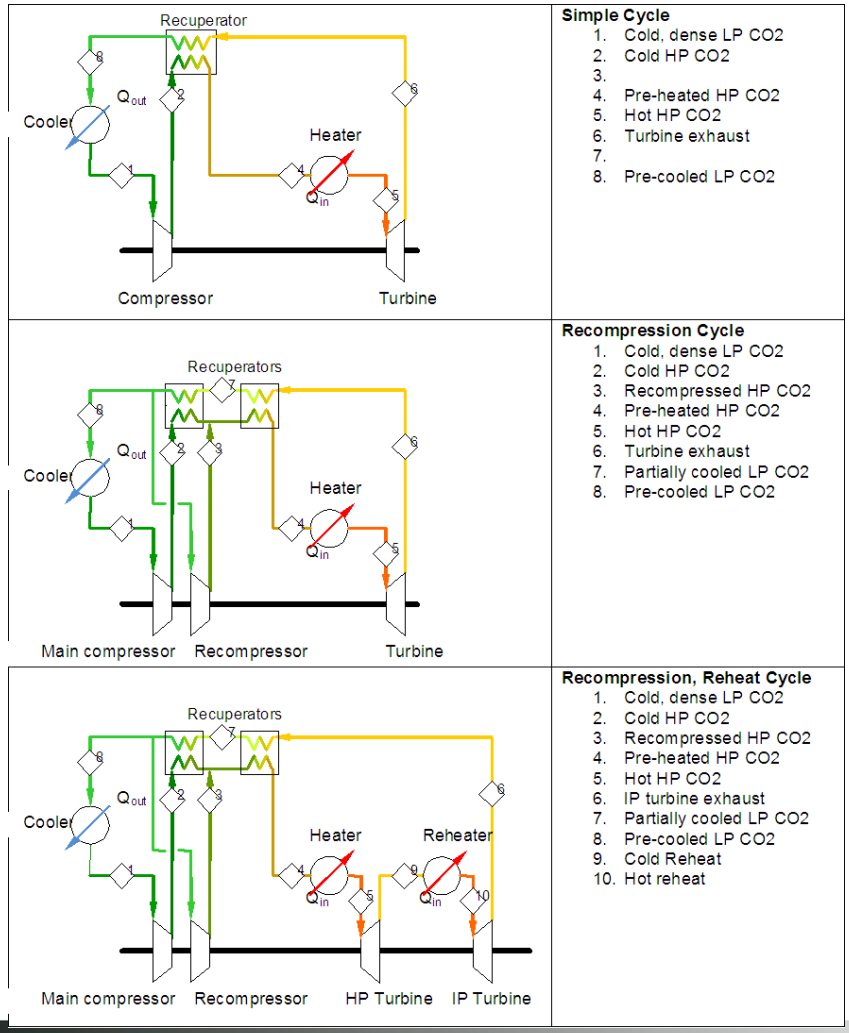

Cycle Type	Modified Brayton
Power Output, MWe	400-800
Pressure Ratio	[2,4]:1
Turbine Outlet Pressure, MPa	7.58
Turbine Inlet Temperature, °C	600<T<760
CO_2 fluid density, lb/ft^3	>35
CO_2 mass flow rate	4-5 times steam turbine with similar power output
Energy Storage Required?	No

Used with permission from the Electric Power Research Institute

Korea Advanced Institute of Science and Technology: Performance of sCO_2 Brayton Cycle with Additive Gases for SFR Application

- **Heat source: Sodium-cooled fast reactor**
- **Analysis evaluated the efficiency effects of mixing additional non-reactive gases with sCO_2 to relieve critical point sensitivities**
- **Analysis indicated that sCO_2 – Xenon gas mixture will yield higher cycle efficiencies than pure sCO_2**
  - Examination of mixtures with argon, nitrogen, and oxygen revealed significantly lowered cycle efficiencies over pure sCO_2
- **Replacing steam Rankine cycle from current designs with sCO_2 Brayton cycle eliminates the potential for sodium-water reaction, thus reducing capital costs by eliminating high cost reaction prevention measures from current designs**
  - Additional sCO_2 cycle benefits identified include:
    - Simplified layout
    - Compact turbomachinery
    - Higher cycle efficiency at SFR reactor exit temperatures (550 – 577C)
  - Use of Xenon mixer reduces potential of sCO_2 decomposition at high temperatures (>1727C)

Korea Advanced Institute of Science and Technology: Performance of sCO_2 Brayton Cycle with Additive Gases for SFR Application

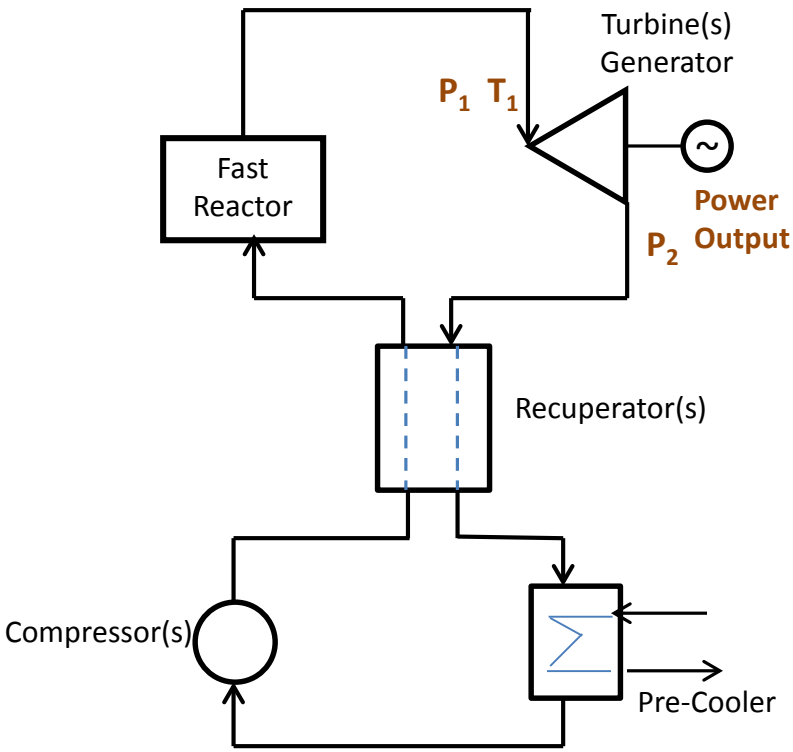

Working Fluids	CO_2	CO_2-Xe	CO_2-Ar	CO_2-N_2	CO_2-O_2
Mixture Mole Fraction	—	0.234	0.147	0.136	0.143
Cycle Efficiency, %	45.37	46.65	44.66	44.02	44.21
Turbine Inlet Temperature, ˚C	550				
Turbine Inlet Pressure, MPa	20				
Turbine Pressure Ratio	2.54	2.64	2.13	2.08	2.08
Turbine Work, MW	387.1	408.9	374.8	362.2	366.6
Main Compressor Work, MW	41.4	44.83	61.25	61.21	63.05
Recompressing Compressor Work, MW	73.47	84.15	45.62	36.84	38.27
Net Work, MW	272.2	279.9	268	264.1	265.2
High Temperature Recuperator Heat Load, MW	960.6	781	1168	1268	1265
Low Temperature Recuperator Heat Load, MW	401	401.5	400	397.3	399.7
Precooler Heat Load, MW	327.8	320.1	332	335.8	334.7
Flow Split Ratio (Recompressed Ratio)	0.39	0.4	0.26	0.23	0.23
Coolant Mass Flow Rate, kg/s	3167	4777	3667	3498	3585
Critical Pressure, MPa	7.38	6.87	9.05	9.26	9.23
Main Compressor Inlet Pressure, MPa	7.61	7.19	9.08	9.33	9.32

Table used with permission from WooSeok Jeong, KAIST

Korea Advanced Institute of Science and Technology: Preliminary Results of Optimal Pressure Ratio for Supercritical CO_2 Brayton Coupled with Small-modular Water-cooled Reactor

- **Heat source: Gen IV and small-modular water-cooled reactors**
- **Analysis identified an optimal pressure ratio of 2.6 to maximize net power output**
  - Turbine and compressor power increase with pressure ratio; however, net power output begins to decrease beyond 2.6
- **Analyzed system assumed reactor power of 330MW with a hot-leg temperature of 310 degC at 15MPa**
- **Peak efficiency was found to be approximately 40% for the sCO_2 Brayton cycle**

Korea Advanced Institute of Science and Technology: Preliminary Results of Optimal Pressure Ratio for Supercritical CO_2 Brayton Coupled with Small-modular Water-cooled Reactor

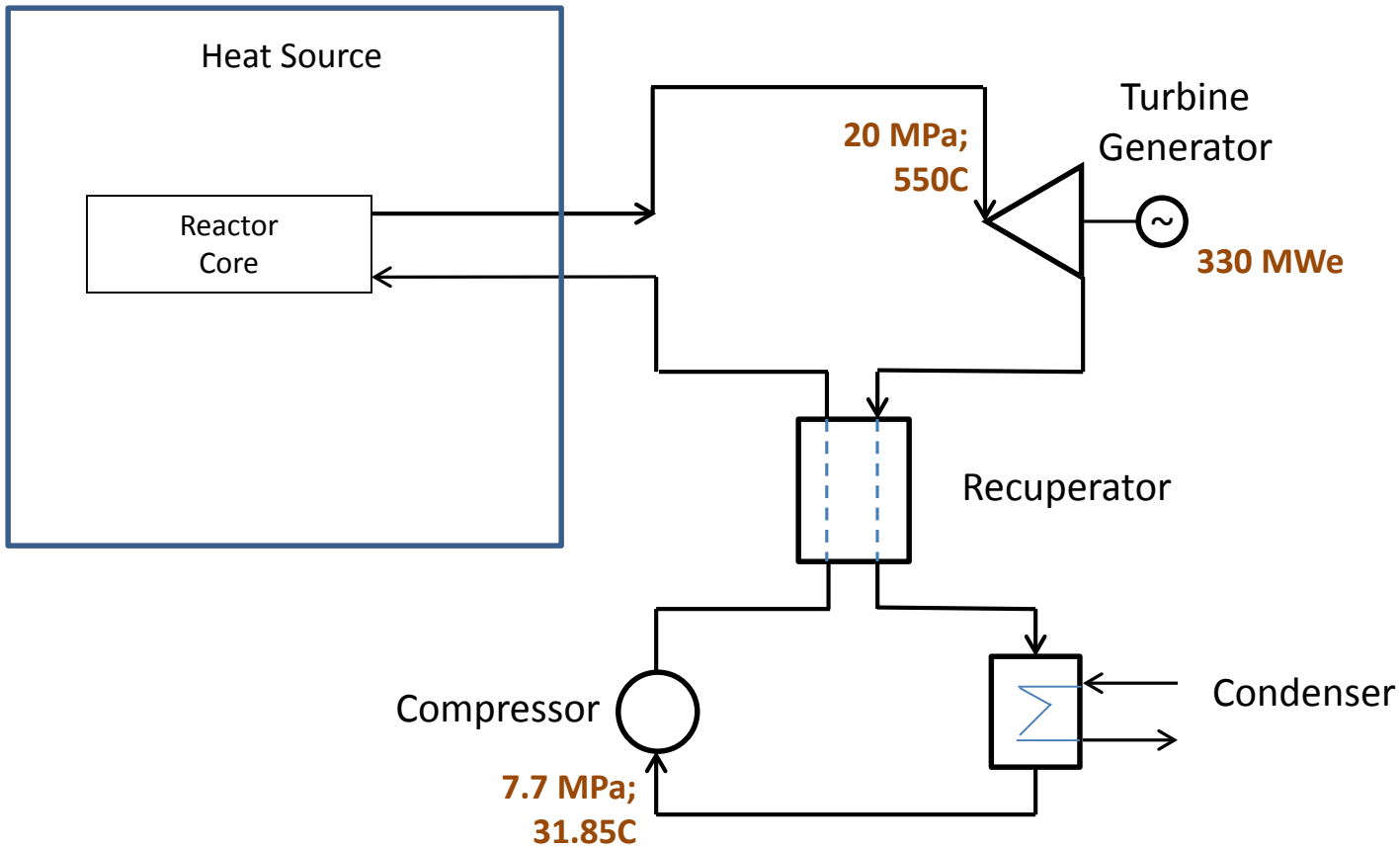

Abengoa Solar: Assessment of the Supercritical Carbon Dioxide for Use in a Solar Parabolic Trough Power Plant

- **Heat source: Solar parabolic trough**
- **sCO_2 Rankine cycle for low-temperature heat recovery yields a power efficiency of 25% and a thermal efficiency of 65%**
- **Use of sCO_2 near critical point increases compressor efficiency**
- **Disadvantage – sCO_2 requires thick-walled piping, which will increase capital expense and create thermal inefficiencies**
- **Peak temperature using an LS-3 solar parabolic trough with a 5.77 aperture and concentration ratio of 82 would be near 500 degC**

Abengoa Solar: Assessment of the Supercritical Carbon Dioxide for Use in a Solar Parabolic Trough Power Plant

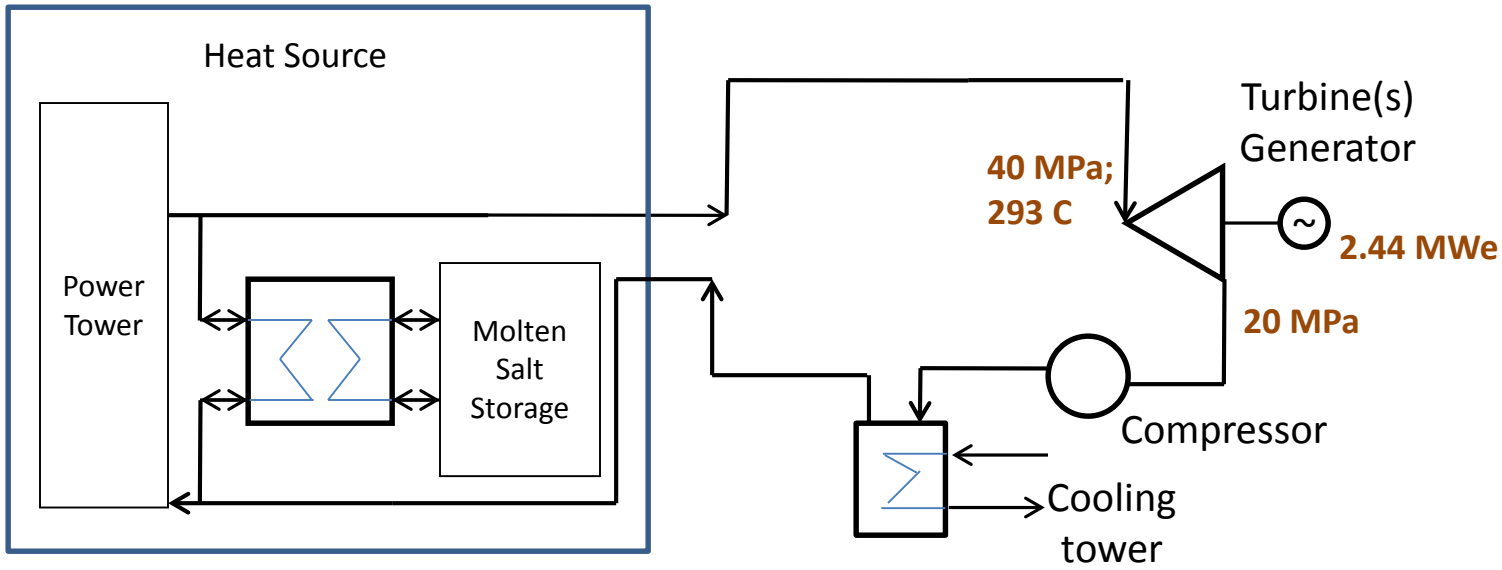

Concepts NREC: Gas Turbine Engine Exhaust Waste Heat Recovery Navy Shipboard Module Development

- **Heat source: Naval gas turbine**
- **System design increases prime mover power output by 20-24%**
- **Installation relies on waste-heat recovery from Rolls Royce MT-30 gas turbine**
  - Utilizes thermoelectric generators (TEG) within the sCO_2 bottoming cycle to increase power recovery
  - Utilizes an auxiliary combustion system to moderate the sCO_2 Brayton cycle during periods of transient demand on the gas turbine
  - To minimize footprint, the installation utilizes a single-drive shaft compressor, turbine, generator configuration

Concepts NREC: Gas Turbine Engine Exhaust Waste Heat Recovery Navy Shipboard Module Development

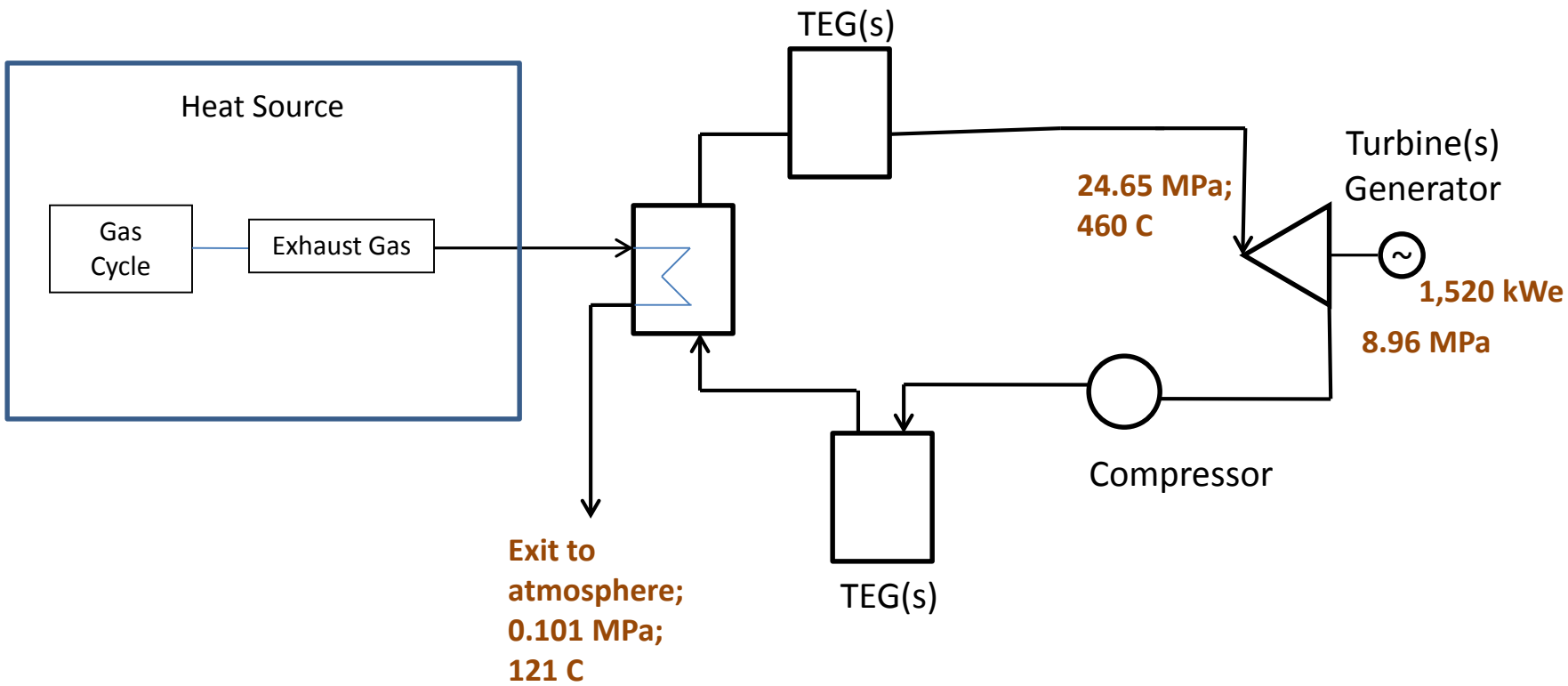

Kumar: Supercritical CO_2 Power Cycle based on Solar Thermal Energy and Ammonia Absorption Chiller

- **Heat source: Concentrated solar thermal with steam intermediate**
- **Proposed system utilizes a steam-based ammonia absorption chilling system for condensing low pressure CO_2 at -33.8 deg C at 2 MPa**
- **Document contains an energy balance for the entire process, which indicates the system is capable of generating 2.48MW for every 6.2MW of solar energy input for 40% efficiency**
- **Assumes sCO_2 main turbine exit conditions of 2.01 MPa and 290.6 deg C**

Kumar: Supercritical CO_2 Power Cycle Based on Solar Thermal Energy and Ammonia Absorption Chiller

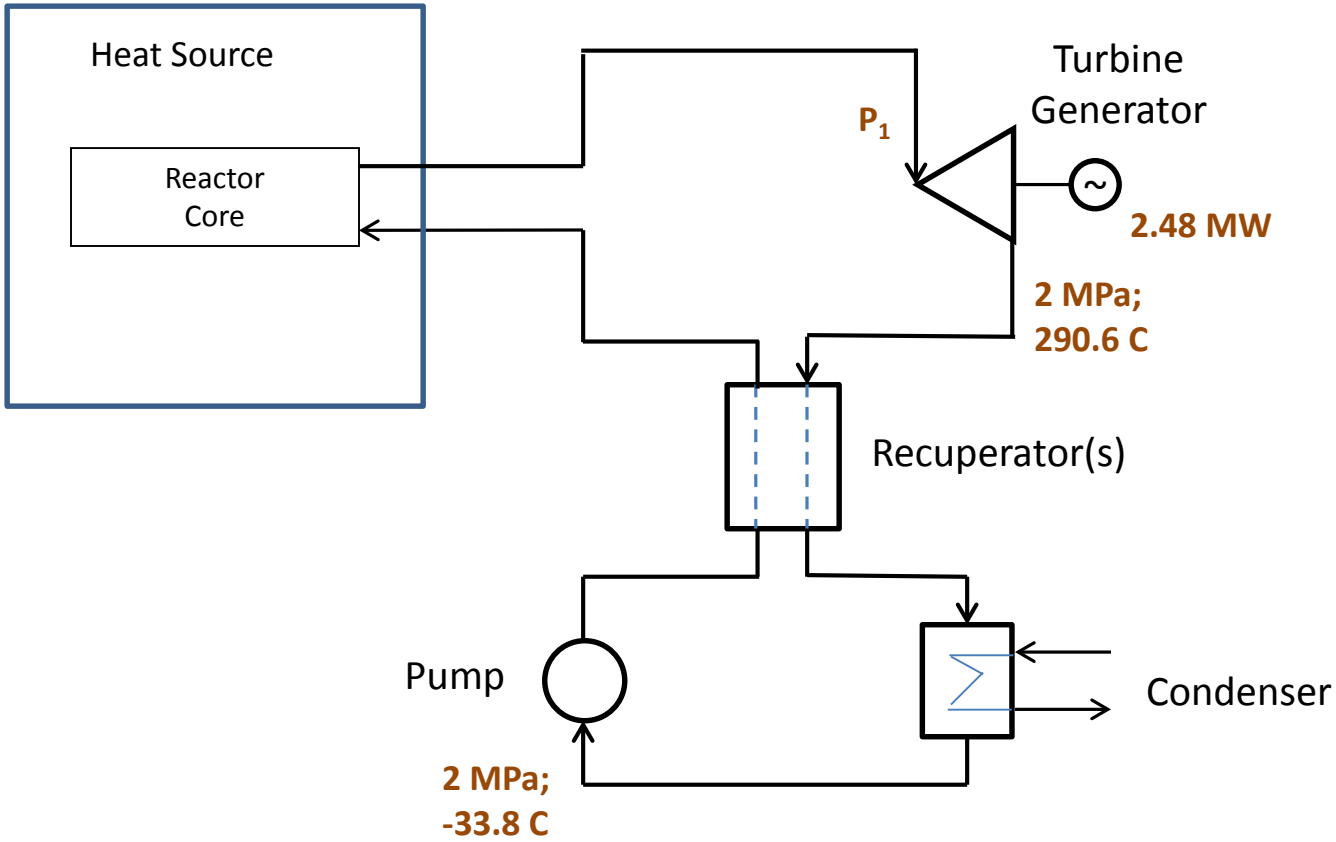

University of Seville (Spain): The Potential of the Supercritical Carbon Dioxide Cycle in High Temperature Fuel Cell Hybrid Systems

- **Heat source: Molten carbonate and solid oxide fuel cells**
- **Proposed system replaces conventional hot air turbine with sCO_2 bottoming cycle**
  - Immediate efficiency increase of ~10% is realized through this action
- **Operational problems encountered by previous studies (time constant mismatching, fuel cell channel sealing, electrode degradation, and standalone fuel cell operation) were countered by separating the fuel cell and the bottoming cycle**
  - Use of a recuperative configuration with a 3:1 pressure ratio relieves issues and allows part-load operation
- **Comparison of sCO_2 and hot air-bottoming cycles displayed an 8% net power increase using sCO_2**
- **Evaluation of sCO_2 bottoming cycle configuration at 50% part load indicated a 4% increase in cycle efficiency**

University of Seville (Spain): The Potential of the Supercritical Carbon Dioxide Cycle in High Temperature Fuel Cell Hybrid Systems

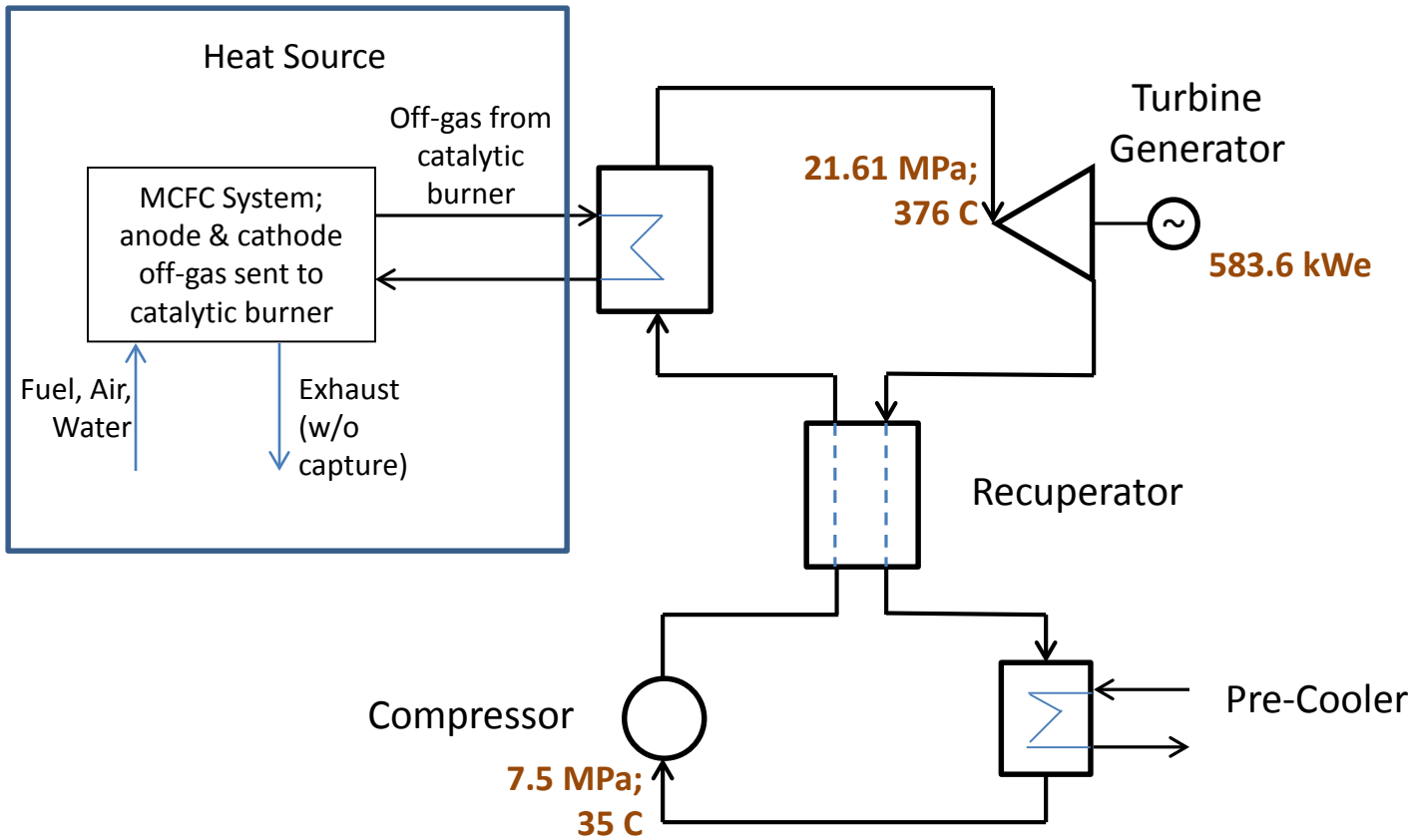

Echogen: Supercritical CO_2 Power Cycle Developments and Commercialization – Why sCO_2 can Displace Steam

- **Heat source: Waste Heat (Thermafficient heat engine)**
- **System designed to power sCO_2 cycle through installation of a heat exchanger in the exhaust stack of a heat source**
- **Efficient system operation requires turbine inlet temperatures between 200 and 540 degC**
- **Existing test installations are capable of a power output of 50kw and is scalable to 50MW, with an efficiency of ~30%**
- **Possible installation as bottoming cycle in gas turbine, stationary engine, industrial waste heat, solar thermal, geothermal, and hybrid internal combustion applications**
- **Installation of Echogen EPS100 heat engine matches performance of double pressure HRSG**
- **Document includes a cost comparison of heat recovery costs using Echogen EPS100 with steam and sCO_2 as heat transfer fluid (awaiting usage permission)**
- **Use of sCO_2 EPS100 increases power output and is predicted to decrease electricity costs by 10-20%**
- **Potential application utilizing CO_2 in sequestration fields (given as future research area)**

Echogen: Supercritical CO_2 Power Cycle Developments and Commercialization – Why sCO_2 can Displace Steam

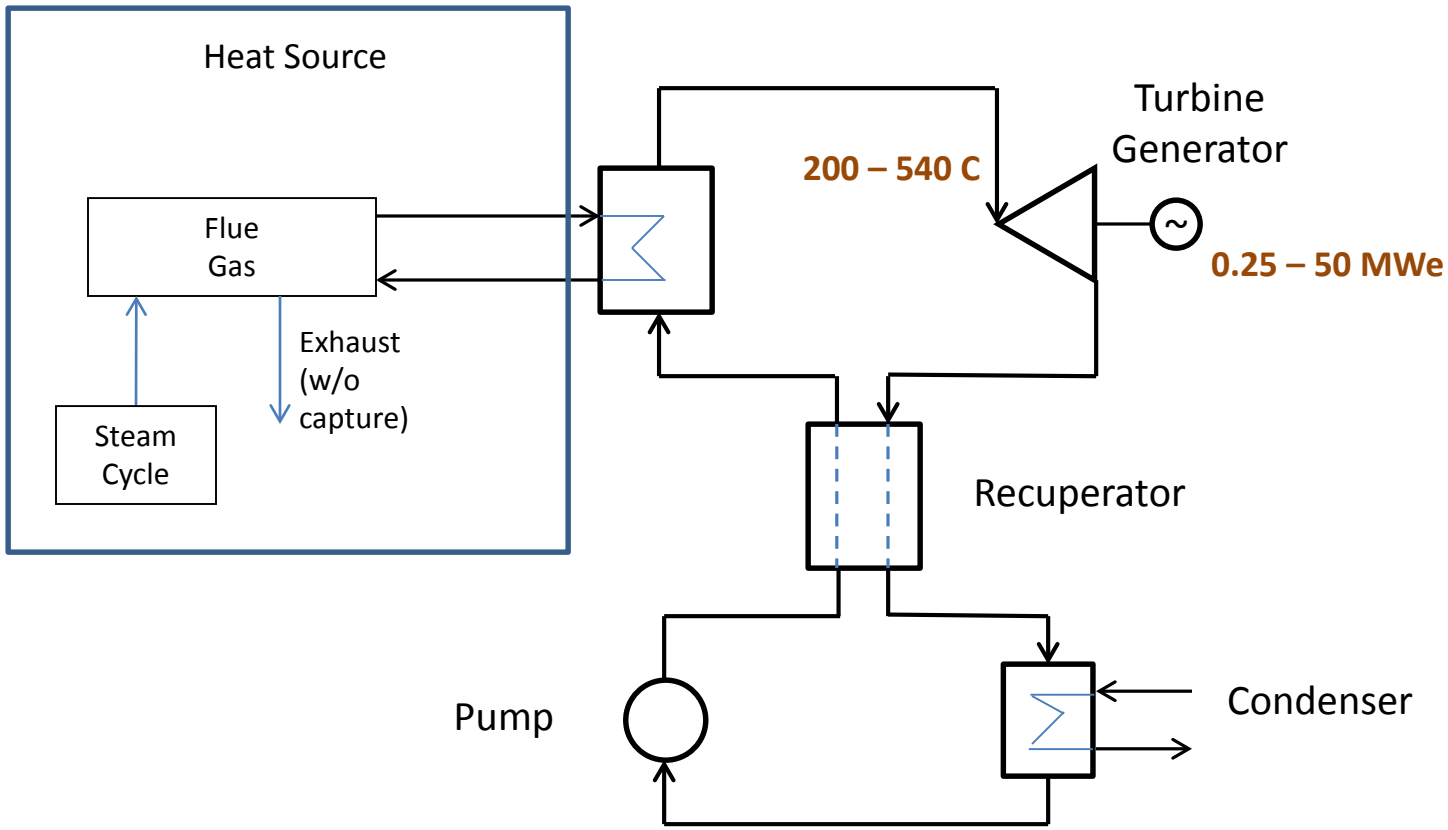

University of South Florida/Oak Ridge National Lab: Study of Supercritical Carbon Dioxide Power Cycle for Low Grade Heat Conversion

- **Heat source: Potential applications using geothermal, solar, and waste heat sources**
- **Analysis identified that sCO_2 is not as efficient as R32 as a working fluid for low-grade heat applications**
  - Efficiency of sCO_2 based cycle drops more quickly than sR32-based cycle as temperature decreases
  - Low-grade heat sources create condensation issues within sCO_2 cycle
  - sCO_2 requires higher operating pressures compared to sR32
  - sR32 requires lower mass flow than sCO_2 to produce the same amount of work at lower temperatures
  - Exergy efficiencies of sCO_2 are between 16-32% between 140-210 degC, while sR32 exergy efficiencies are between 45-55% over the same temperature range

Sandia National Laboratories: Operation and Analysis of a Supercritical CO_2 Brayton Cycle

- **Heat sources: solar, nuclear, and fossil-fuel-fired power plants**
- **Document details design and test findings from the operating sCO_2 test loop at Sandia National Laboratory**
- **Test loop power output of 150kW is sufficient to meet the power needs of loop operation**
  - Test loop is unrecuperated
  - Test loop operates at compressor inlet temperatures between 290-318K (near CO_2 critical point)
- **Test loop avoided two-phase main compressor operating condition encountered by PWR through the use of radial compressors**
- **Test loop operates at a maximum operating pressure of 2500 psi**

Sandia National Laboratories: Operation and Analysis of a Supercritical CO_2 Brayton Cycle

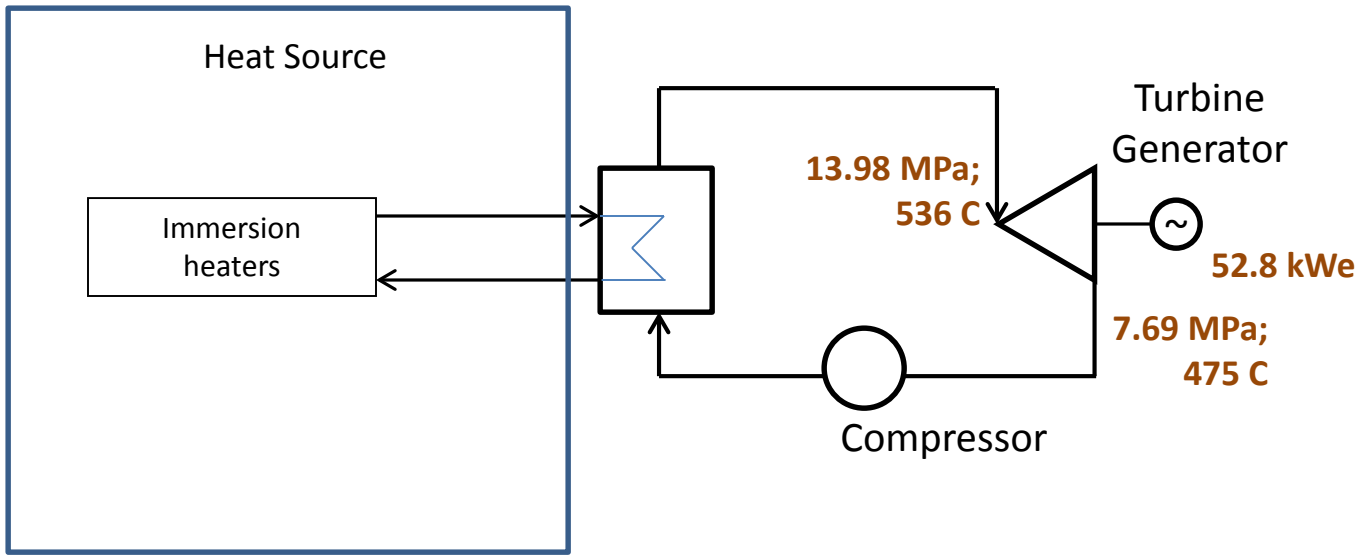

Literature Review Messages

- **Turbine inlet condition stability represents a major obstacle to the successful implementation of an sCO_2 power cycle**
  - Current research shows that applications utilizing a nuclear-heat source – driven by goal increase efficiency at reduced cost
  - Nuclear sources are capable of providing more stable cycle inlet conditions, which increase cycle power efficiency to between 40-50%
  - Other highly plausible applications include coal-fired and solar-heat sources with expected power cycle efficiencies greater than 35%; however, these applications require additional research on moderating turbine inlet conditions
- **While nuclear power sources are the prime thrust area of ongoing research, available information indicates that fossil-fuel-based heat sources are also a promising source**
  - EPRI and Pratt & Whitney/Rocketdyne are the two main investigators in this area
  - EPRI analysis estimates (but does not numerate) that sCO_2 applications in coal-fired power plants will increase plant efficiency and reduce capital expenses, emissions, and electricity costs
  - PWR analysis of sCO_2 cycle (ZEPS) application with a 550MWe PFBC power source predict a power cycle efficiency of 38.3% and a 20% LCOE decrease

Literature Review Messages

- **Solar applications are also a promising power source particularly power tower installations; energy storage being an important consideration**
  - Research indicates that solar powered sCO_2 power cycles with a recompression of ratio of 2.6 have a cycle-power efficiency of 38.3%
  - Installation of a thermal energy storage medium (molten salt) in the process has been projected to allow peak-hour power shifting and reduction in weather impacts

Literature Review Messages

Other heat sources not considered because of limited-cycle efficiencies:

- **Waste-heat application research predicts varied results dependent on the heat-source quality**
  - Low-grade heat sources, such as geothermal, are predicted to have a thermal cycle efficiency of 16.5% at 200 degC
  - Marine gas turbine engine exhaust applications are projected to increase plant efficiency of 20-24% depending on whether the system includes thermoelectric generators within the heat-engine bottoming cycle (40 – 50% cycle efficiency)
  - Applications of the EchoGen Thermafficient Heat Engine as the bottoming cycle of a simple gas turbine or in the exhaust stack from industrial process sources are projected to have a cycle efficiency up to 30%
    - Research projects that this system will result in a 10-20% LCOE decrease
- **A bottoming cycle application of sCO_2 with a 540kWe high-temperature fuel cell heat source is projected to have a 10% higher efficiency than a stand-alone fuel cell**

Reflections / Questions

- **Limited public comprehensive systems analysis studies**
  - **How are cycle efficiencies determined?**
- **Test facilities – focused on turbine testing: What are the objectives for the test programs? What are viewed as the critical path challenges? What are the range of operating conditions? What are the critical scale-up parameters?**
- **What is the current status of sCO_2 turbine design as function of operating conditions (T, P)**
- **What is the current status of heat-exchange design basis as function of operating conditions (e.g. heat-exchanger size, cost as function of operating T, P)**

Back-up slides

Reviewed References

1) Van Abel, Eric, Mark Anderson, and Michael Corradini. “Numerical Investigation of Pressure Drop and Local Heat Transfer of Supercritical CO2 in Printed Circuit Heat Exchangers.” Boulder, CO, 2011. 10. Web. 11 Dec. 2012.
2) Alpy, N., D. Haubensack, et al. “CEA Views as Regards Supercritical CO2 Cycle Development Priorities & Related R&D Approach.” Troy, NY, 2009. 20. Web. 11 Dec. 2012.
3) Alpy, N., L. Cachon, et al. “Gas Cycle Testing Opportunity with ASTRID, the French SFR Prototype.” Boulder, CO. Web. 6 Dec. 2012.
4) Anderson, Mark, Guiliume Mignot, and Michael Corradini. “Experimental Investigation of Critical Flow of Supercritical Carbon Dioxide - Supercritical CO2 Power Cycle Symposium.” 2009. 19. Web. 11 Dec. 2012.
5) Andresen, Trond, Yves Ladam, and Petter Neksa. “Simultaneous Optimization of Power Cycle & Heat Recovery Heat Exchanger Parameters.” Boulder, CO, 2011. 7. Web. 11 Dec. 2012.
6) Ashcroft, John, Kenneth Kimball, and Michael Corcoran. “Overview of Naval Reactors Program Development of the Supercritical Carbon Dioxide Brayton System.” Boulder, CO, 2009. 8. Web. 11 Dec. 2012.
7) Bae, Yoon. “Experiments on Supercritical Heat Transfer to CO2 in Tubes & Annuli.” Troy, NY, 2009. 43. Web. 11 Dec. 2012.
8) Ball, Max. “Greenhouse Gas: A Driver for Advanced Energy Systems.” Boulder, CO, 2011. 28. Web. 6 Dec. 2012.
9) Ballinger, R. G. et al. “Corrosion of Materials in Supercritical CO2 Environments.” Troy, NY, 2009. 36. Web. 11 Dec. 2012.
10) Barrett, Keith, and Steven Wright. “Data Acquisition & Control Systems for Experimental Brayton Loops.” Troy, NY, 2009. 4. Web. 11 Dec. 2012.
11) Di Bella, Francis. “Gas Turbine Engine Exhaust Waste Heat Recovery Navy Shipboard Module Development.” Boulder, CO. 8. Web. 6 Dec. 2012.
12) Bruckner, Robert, and Christopher DellaCorte. “Windage Power Loss in Gas Foil Bearings and the Rotor-Stator Clearance of High Speed Generators Operating in High Pressure Carbon Dioxide Environments.” Troy, NY, 2009. 6. Web. 11 Dec. 2012.
13) Bryant, John, Henry Saari, and Kourosh Zanganeh. “Analysis and Comparison of the Simple and Recompression Supercritical CO2 Cycles.” Boulder, CO, 2011. 8. Web. 6 Dec. 2012.
14) Cao, Guoping et al. “Corrosion of Candidate Alloys in Superciritical Carbon Dioxide.” Troy, NY, 2009. 28. Web. 11 Dec. 2012.
15) Carlson, Matthew et al. “Measurements of Heat Transfer and Pressure Drop Characteristics of Supercritical Carbon Dioxide Flowing in Zig-Zag Printed Circuit Heat Exchanger Channels.” Boulder, CO, 2011. 10. Web. 11 Dec. 2012.
16) Casella, Francesco, and Piero Colonna. “Development of a Modelica Dynamic Model of Solar Supercritical CO2 Brayton Cycle Power Plants for Control Studies.” Boulder, CO. 7. Web. 11 Dec. 2012.
17) Chapman, Daniel, and Diego Arias. “Assessment of the Supercritical Carbon Dioxide Cycle for Use in a Solar Parabolic Trough Power Plant.” Troy, NY, 2009. 5. Web. 11 Dec. 2012.
18) Chordia, Lalit. “Optimizing Equipment for Supercritical Applications.” Boulder, CO, 2011. 7. Web. 6 Dec. 2012.
19) Conboy, Tom, and Steven Wright. “Experimental Investigation of the Supercritical CO2 Condensing Cycle.” Boulder, CO, 2011. 14. Web. 11 Dec. 2012.
20) Cox, Timothy. “Preliminary Results of Heat Transfer Experiments with Supercritical Carbon Dioxide in the Small System Test Loop.” Troy, NY, 2009. 7. Web. 11 Dec. 2012.
21) “Development of an Experimental Test Facility to Measure Leakage Through Labyrinth Seals.” Boulder, CO, 2011. 7. Web. 11 Dec. 2012.
22) Dostal, Vaclav, and Jan Dostal. “Supercritical CO2 Regeneration Bypass Cycle - Comparision to Traditional Layouts.” Boulder, CO, 2011. 5. Print.
23) Dostal, Vaclav, and Martin Kulhanek. “Research on the Supercritical Carbon Dioxide Cycles in the Czech Republic.” Troy, NY, 2009. 8. Web. 11 Dec. 2012.
24) Dyreby, John et al. “Modeling Off-Design Operation of a Supercritical Carbon Dioxide Brayton Cycle.” Boulder, CO, 2011. 9. Web. 11 Dec. 2012.
25) Eisemann, Kevin, and Robert Fuller. “Supercritical CO2 Brayton Cycle Design and System Start-Up Options.” 2011. 7. Web. 11 Dec. 2012.
26) EPRI. “Section 8 Modified Brayton Power Cycle Using Supercritical CO2 as the Working Fluid.” *Coal Technologies with CO2 Capture - Status, Risks, and Markets 2011*. Palo Alto, CA, 2011. 16. Print.
27) De Escalona, Jose, Richardo Chacartegui, and David Sanchez. “Potential of the Supercritical Carbon Dioxide Cycle in High Temperature Fuel Cell Hybrid Systems.” Boulder, CO, 2011. 6. Web. 6 Dec. 2012.

Reviewed References

28) Fatima, Roma et al. “Numerical Investigation of Thermal Hydraulic Behavior of Supercritical Carbon Dioxide in Compact Heat Exchangers - Supercritical CO2 Power Cycle Symposium.” Boulder, CO, 2011. 9. Web. 11 Dec. 2012.
29) Fourspring, Patrick, and Joseph Nehrbauer. “Heat Exchanger Testing for Closed, Brayton Cycles Using Supercritical CO2 as the Working Fluid.” Boulder, CO, 2011. 10. Web. 11 Dec. 2012.
30) Fuller, Robert, and Kevin Eisemann. “Centrifugal Compressor Off-Design Performance for Supercritical CO2.” Boulder, CO, 2011. 12. Web. 11 Dec. 2012.
31) Fuller, Robert, Jeff Noall, and Jason Preuss. “Turbomachinery for Supercritical CO2 Power Cycles.” Copenhagen, Denmark, 2012. 6. Print.
32) Gallaway, Tara, Michael Podowski, and S.P. Antal. “Multidimensional Modeling of Flow & Heat Transfer to CO2 at Supercritical Pressures.” Troy, NY, 2011. 17. Web. 11 Dec. 2012.
33) Hajek, Petr. “Conversion Cycles with Supercritical Fluids for Nuclear Plants.” Boulder, CO, 2011. 6. Web. 11 Dec. 2012.
34) ---. “Thermodynamic Aspects of Cycles with Supercritical Fluids.” Troy, NY, 2009. 7. Web. 11 Dec. 2012.
35) Hemrle, Jaroslav et al. “Thermoelectric Energy Storage Based on Transcritical CO2 Cycle.” Boulder, CO, 2011. 5. Web. 11 Dec. 2012.
36) Hexemer, Michael et al. “Integrated Systems Test (IST) Supercritical CO2 Brayton Loop Transient Model Description & Initial Results.” Troy, NY, 2011. 172. Web. 11 Dec. 2012.
37) Hexemer, Michael, Kevin Rahner, and Brett Siebert. “Supercritical CO2 Brayton Cycle Integrated System Test (IST) TRACE Model and Control System Design.” Boulder, CO, 2011. 58. Web. 11 Dec. 2012.
38) Hoang, Hiep, Michael Corcoran, and John Wuthrich. “Thermodynamic Study of a Supercritical CO2 Brayton Cycle Concept.” Troy, NY, 2009. 5. Web. 11 Dec. 2012.
39) Howard, Damon. “Supercritical CO2 Brayton Cycle Integrated System Test (IST).” Troy, NY, 2009. 14. Web. 11 Dec. 2012.
40) Jeong, Woo Seok, Yong Hoon Jeong, and Jeong Ik Lee. “Performance of Supercritical CO2 Brayton Cycle with Additive Gases for SFR Application.” Boulder, CO, 2011. 5. Web. 6 Dec. 2012.
41) Johnson, Gregory, and Michael McDowell. “Issues Associated With Coupling Supercritical CO2 Power Cycles to Nuclear, Solar, & Fossil Fuel Heat Sources.” Troy, NY, 2009. 18. Web. 11 Dec. 2012.
42) ---. “Supercritical CO2 Cycle Development at Pratt & Whitney Rocketdyne.” Boulder, CO, 2011. 5. Print.
43) Kao, Shih-Ping, J. Gibbs, and P. Hejzlar. “Dynamic Simulation & Control of a Supercritical CO2 Power Conversion System for Small Light Water Reactor Applications.” Troy, NY, 2009. 25. Web. 11 Dec. 2012.
44) Kimball, Kenneth. “Overview of Naval Reactors Program Development of the Supercritical Carbon Dioxide Brayton System.” Boulder, CO, 2011. 14. Web. 11 Dec. 2012.
45) Kruizenga, Alan et al. “Supercritical Carbon Dioxide Heat Transfer Research.” Troy, NY, 2009. 22. Web. 11 Dec. 2012.
46) Kulhanek, Martin, and Vaclav Dostal. “Thermodynamic Analysis and Comparison of Supercritical Carbon Dioxide Cycles.” Boulder, CO, 2011. 7. Web. 11 Dec. 2012.
47) Kumar, Jitender. “Supercritical CO2 Power Cycle Based on Solar Thermal Energy and Ammonia Absorption Chiller.” Boulder, CO, 2011. 10. Print.
48) Ludington, A.R., P. Hejzlar, and M.J. Driscoll. “Development of Tools for Supercritical CO2 Cycle Analysis at MIT.” Troy, NY, 2009. 6. Web. 11 Dec. 2012.
49) McEligot, D.M. et al. “Advanced Computational Thermal Studies & Their Assessment for Supercritical-Pressure Reactors (SCRS).” Troy, NY, 2009. 4. Web. 11 Dec. 2012.
50) Milone, Douglas. “Computational Model and Experimental Data on the Natural Circulation of Supercritical Carbon Dioxide.” Troy, NY, 2009. 7. Web. 11 Dec. 2012.
51) Moisseytsev, Anton, and Jim Sienicki. “ANL Plant Dynamics Code & Control Strategy Development for the Supercritical Carbon Dioxide Brayton Cycle.” Troy, NY, 2009. 18. Web. 11 Dec. 2012.
52) ---. “Investigation of Alternative Layouts for the Supercritical Carbon Dioxide Brayton Cycle for a Sodium-Cooled Fast Reactor.” Troy, NY, 2009. 26. Web. 11 Dec. 2012.
53) ---. “Investigation of Plant Control Strategies for a Supercritical CO2 Brayton Cycle Coupled to a Sodium-Cooled Fast Reactor Using the ANL Plant Dynamics Code.” Boulder, CO, 2011. 8. Web. 11 Dec. 2012.
54) ---. “Validation of the ANL Plant Dynamics Code Compressor Model with SNL/BNI Compressor Test Data.” Boulder, CO, 2011. 7. Web. 11 Dec. 2012.
55) Mokry, Sarah, and Igor Pioro. “Heat Transfer Correlation for Supercritical Carbon Dioxide Flowing Upward in a Vertical Bare Tube.” Boulder, CO, 2011. 10. Web. 11 Dec. 2012.

Reviewed References

56) Mokry, Sarah, Igor Pioro, and Romney Duffey. “Experimental Heat Transfer to Supercritical CO2 Flowing Upward in a Bare Vertical Tube.” Troy, NY, 2009. 15. Web. 11 Dec. 2012.
57) Noall, Jeff, and Bill Batton. “Method for Determining the Applicability of Idealized Aerodynamic/Hydrodynamic Design Tools for High Pressure CO2 Power Systems.” Boulder, CO, 2011. 7. Web. 11 Dec. 2012.
58) Parma, Edward et al. “Supercritical CO2 Direct Gas Fast Reactor (SC-GFR) Concept.” Boulder, CO, 2011. 9. Print.
59) Persichilli, Michael et al. “Supercritical CO2 Power Cycle Developments and Commercialization: Why SCO2 Can Displace Steam.” 2011. 15. Web. 6 Dec. 2012.
60) Pickard, Paul. “U.S. Department of Energy Office of Nuclear Energy Supercritical CO2 Brayton Cycle Energy Conversion Program.” Troy, NY, 2009. 16. Web. 11 Dec. 2012.
61) La Pierres, Renaud, David Southall, and Stephen Osborne. “Impact of Mechanical Design Issues on Printed Circuit Heat Exchangers.” Boulder, CO, 2011. 7. Web. 11 Dec. 2012.
62) Podowski, Michael, and Tara Gallaway. “Hydrodynamic Effects of S-CO2 Property Variations in Nuclear Energy Systems.” Boulder, CO, 2011. 34. Web. 11 Dec. 2012.
63) Pratt & Whitney Rocketdyne. *Supercritical CO2 Turbomachinery (SCOT) Technology Development for Power Plant Applications: Technical Addendum to the Final Report*. Canoga Park, CA, 2011. Print.
64) ---. *Turbine Technology Program Phase II: SCO2 Turbomachinery Configuration and Control Trade Study: Draft*. Canoga Park, CA, 2012. Print.
65) Rahner, Kevin, and Michael Hexemer. “Application of Supercritical CO2 Brayton Cycle Integrated System Test (IST) TRACE Model to Initial Turbomachinery and Brayton Loop Testing.” Boulder, CO, 2011. 11. Web. 11 Dec. 2012.
66) Rochau, Gary. “Supercritical CO2 Brayton Cycle: The DOE Program.” Boulder, CO, 2011. 14. Web. 11 Dec. 2012.
67) Rouillard, Fabien, F. Charton, and Gervaise Moine. “Corrosion Behaviour of Different Metallic Materials in Supercritical CO2 at 550°C & 250 Bars.” Troy, NY, 2009. 27. Web. 11 Dec. 2012.
68) Rouillard, Fabien, Gervaise Moine, and Jean-Christophe Ruiz. “Corrosion Mechanism of 9Cr Steel Under CO2 at 550 C Identification of Key Environmental Parameters and Technological Impacts.” Boulder, CO, 2011. 41. Web. 11 Dec. 2012.
69) Saari, Henry et al. “Supercritical CO2 Advanced Brayton Cycle Design.” Boulder, CO, 2011. 21. Print.
70) Sabau, Adrian et al. “Investigations of Supercritical CO2 Rankine Cycles for Geothermal Power Plants.” Boulder, CO, 2011. 8. Web. 11 Dec. 2012.
71) “Scale Dependencies of Supercritical Carbon Dioxide Brayton Cycle Technologies and the Optimal Size for a Next-Step Supercritical CO2 Cycle Demonstration - Supercritical CO2 Power Cycle Symposium.” Web. 11 Dec. 2012.
72) Siebert, Brett et al. “TRACE: Modifications in Support of Supercritical CO2 Transient Modeling.” Troy, NY, 2009. 17. Web. 11 Dec. 2012.
73) Sienicki, Jim, Claude Reed, et al. “Investigation of Fundamental Phenomena Relevant to Coupling the Supercritical Carbon Dioxide Brayton Cycle to Sodium-Cooled Fast Reactors.” Boulder, CO, 2011. 6. Web. 11 Dec. 2012.
74) Sienicki, Jim, Anton Moisseytsev, Dae Cho, et al. “Recent Research & Development on the Supercritical Carbon Dioxide Brayton Cycle at Argonne National Laboratory.” Troy, NY, 2009. 21. Web. 11 Dec. 2012.
75) Sienicki, Jim, Anton Moisseytsev, Robert Fuller, et al. “Scale Dependencies of Supercritical Carbon Dioxide Brayton Cycle Technologies and the Optimal Size for a Next-Step Supercritical CO2 Cycle Demonstration.” Boulder, CO, 2011. 5. Web. 11 Dec. 2012.
76) Singh, Rajinesh, Andrew Rowlands, and Peter Jacobs. “Dynamic Characteristics & Perspectives on Control of a Supercritical-CO2 Closed Brayton-Cycle Power-Loop in a Geothermal Power Plant.” Boulder, CO, 2011. 8. Web. 11 Dec. 2012.
77) Southall, David. “Diffusion Bonding in Compact Heat Exchangers.” Troy, NY, 2009. 5. Web. 11 Dec. 2012.
78) Sridharan, Kumar, Guoping Cao, and Mark Anderson. “Corrosion Testing of Materials in High Temperature Supercritical Carbon-Dioxide Environment.” Boulder, CO, 2011. 3. Web. 11 Dec. 2012.
79) Suo-Anttila, J., and Steven Wright. “Computational Fluid Dynamics Code for Supercritical Fluids.” Boulder, CO, 2011. 8. Web. 11 Dec. 2012.
80) “Thermal-Hydraulics and Dynamics of Supercritical CO2 Reactor.” Troy, NY, 2009. 9. Web. 11 Dec. 2012.

Reviewed References

81) Tunison, Harmon. “Materials Evaluation in Supercritical CO2.” Troy, NY, 2009. 20. Web. 11 Dec. 2012.
82) Turchi, Craig. “Supercritical CO2 Application in Concentrating Solar Power Systems.” Troy, NY, 2009. 5. Print.
83) Turchi, Craig, and Zhiwen Ma. “Advanced Supercritical Carbon Dioxide Power Cycle Configurations for Use in Concentrating Solar Power Systems.” Boulder, CO. Web. 6 Dec. 2012.
84) Vidhi, Rachana et al. “Study of Supercritical Carbon Dioxide Power Cycle for Low Grade Heat Conversion.” Boulder, CO. 8. Web. 6 Dec. 2012.
85) Wright, Steven, Ross Radel, et al. *Operation and Analysis of a Supercritical CO2 Brayton Cycle*. Albuquerque, NM: Sandia National Laboratories, 2010. Print.
86) Wright, Steven, Tom Conboy, et al. “Summary of the Sandia Supercritical CO2 Development Program.” Boulder, CO, 2011. 16. Web. 11 Dec. 2012.
87) Wright, Steven, Paul Pickard, et al. “Supercritical CO2 Compression Loop Operation & Test Results.” Troy, NY, 2009. 12. Web. 11 Dec. 2012.
88) Wright, Steven, Tom Conboy, and Gary Rochau. “Break-Even Power Transients for Two Simple Recuperated S-CO2 Brayton Cycle Test Configurations.” Boulder, CO, 2011. 31. Web. 11 Dec. 2012.
89) Wright, Steven, Paul Pickard, and Robert Fuller. “Supercritical CO2 Heated Un-Recuperated Brayton Loop Operation & Test Results.” Troy, NY, 2009. 12. Web. 11 Dec. 2012.
90) Yoon, Ho Joon et al. “Preliminary Results of Optimal Pressure Ratio for Supercritical CO2 Brayton Cycle Coupled with Small Modular Water Cooled Reactor.” Boulder, CO, 2011. 7. Web. 6 Dec. 2012.

Barber-Nichols: Turbomachinery for Supercritical CO_2 Power Cycles

- **Heat source: Potential applications utilizing nuclear, solar, waste heat, coal combustion, and energy-storage heat sources**
- **Provided turbomachinery development expertise for Sandia test loop**
- **Turbomachinery has been developed that will support operation with moderate heat sources between 400 – 650 degC and power levels up to 50MW**
- **Turbine efficiencies of 85% are attainable**
- **Compressor efficiencies of 80% are attainable**
- **Existing turbines are capable of operating at sCO_2 mass flow rates of**
  - Low pressure: 166 kg/sec
  - High pressure: 100 kg/sec
- **Synchronization of sCO_2 Brayton power cycle with power grid requires a minimum two-stage compressor to maintain 60Hz operation**
- **Document contains a technology chart for sCO_2 power systems based on power output (next slide)**

Barber-Nichols: Turbomachinery for Supercritical CO_2 Power Cycles

Generalized Technology Chart for sCO_2 Power Systems

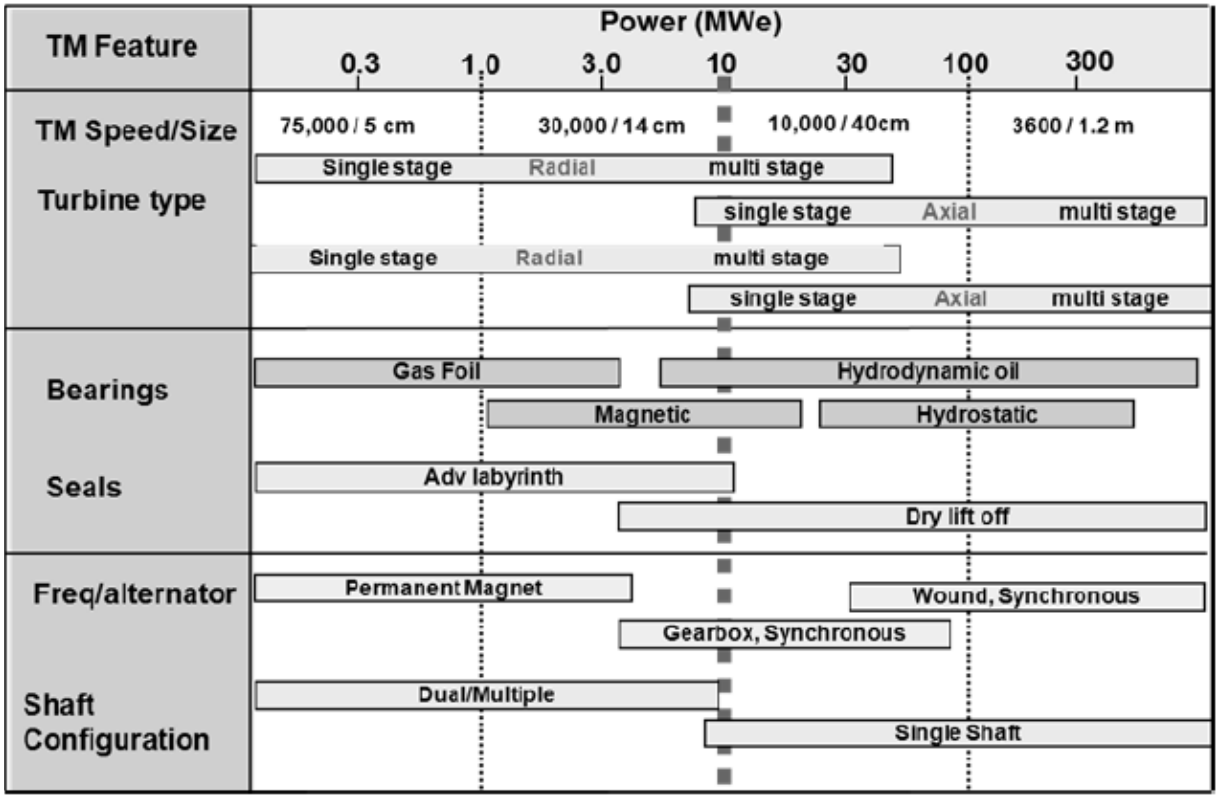

Used with permission from Robert Fuller, Barber-Nichols, Inc.
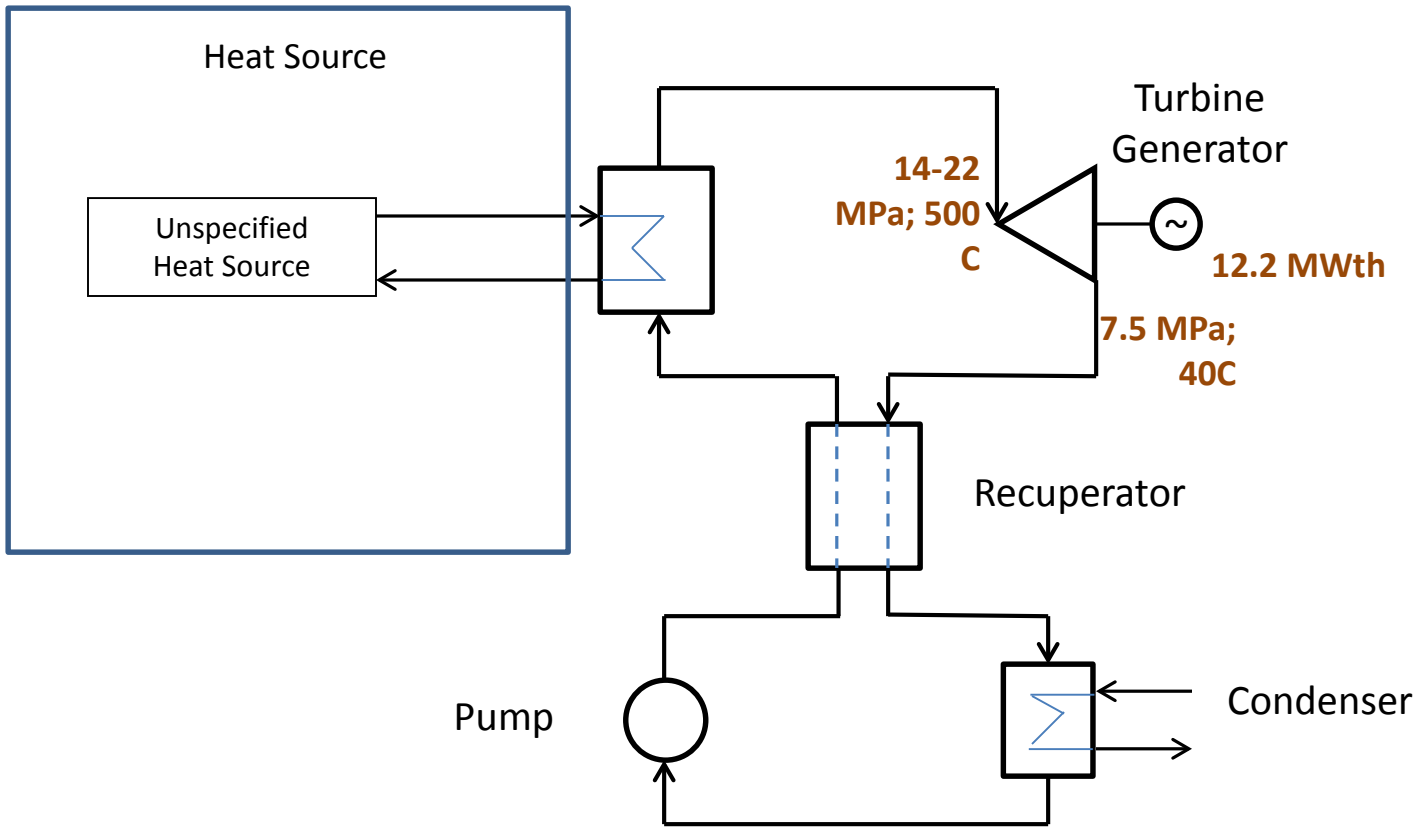
Barber-Nichols: Turbomachinery for Supercritical CO_2 Power Cycles