U.S. DEPARTMENT OF ENERGY | National Energy Technology Laboratory

OFFICE OF FOSSIL ENERGY

Analysis of Natural Gas Fuel Cell Plant Configurations – Revision 1

November 29, 2013

DOE/NETL-2013/1593

Disclaimer

This report was prepared as an account of work sponsored by an agency of the United States Government. Neither the United States Government nor any agency thereof, nor any of their employees, makes any warranty, express or implied, or assumes any legal liability or responsibility for the accuracy, completeness, or usefulness of any information, apparatus, product, or process disclosed, or represents that its use would not infringe privately owned rights. Reference therein to any specific commercial product, process, or service by trade name, trademark, manufacturer, or otherwise does not necessarily constitute or imply its endorsement, recommendation, or favoring by the United States Government or any agency thereof. The views and opinions of authors expressed therein do not necessarily state or reflect those of the United States Government or any agency thereof.

Author List:

Energy Sector Planning and Analysis (ESPA)

Richard Newby, Dale Keairns

Booz Allen Hamilton, Inc.

This report was prepared by Energy Sector Planning and Analysis (ESPA) for the United States Department of Energy (DOE), National Energy Technology Laboratory (NETL). This work was completed under DOE NETL Contract Number DE-FE0004001. This work was performed under ESPA Task 341.03.05.

The authors wish to acknowledge the excellent guidance, contributions, and cooperation of the NETL staff, particularly:

Walter Shelton, NETL Technical Project Monitor

Gregory Hackett, NETL Technical Project Monitor

Daniel Driscoll, Shailesh Vora, and Travis Shultz

DOE Contract Number DE-FE0004001

This page intentionally left blank.

Table of Contents

Executive Summary 7
1 Introduction 19
2 Pathway Study Basis 22
2.1 Site Description 22
2.2 Design Fuel 23
2.3 SOFC Power Island Characterization 23
2.3.1 Estimation of Fuel Cell Operating Voltage 24
2.3.2 SOFC Carbon Deposition Control 24
2.3.3 Estimation of Steam Bottoming Cycle Performance 24
2.4 Plant Characteristics 25
2.4.1 Plant Capacity Factor 25
2.4.2 Plant Sparing Philosophy 25
2.4.3 Plant Generating Capacity 25
2.4.4 Number of Parallel Process Trains 25
2.4.5 Natural Gas Reforming Technology 26
2.4.6 Natural Gas Desulfurization Technology 26
2.4.7 SOFC Power Island Technology 26
2.4.8 SOFC CO_2 Capture Technology 27
2.5 Environmental Requirements 27
2.5.1 NGFC Emission Perspective 27
2.5.2 CO_2 Product Specification 27
2.6 Economic Analysis 28
2.6.1 Plant Maturity 28
2.6.2 Contingency 29
2.6.3 Operating Labor 29
2.6.4 First-Year, Current-Dollar Cost of Electricity 30
2.6.5 Capital Costs 30
2.6.6 SOFC Power Island Capital Cost 31
2.6.7 Production Costs and Expenses 33
2.6.8 Owner's Costs 35
2.7 Raw Water Consumption 35
3 NGFC Plant Major Process Areas 37
3.1 Air Separation Unit 37
3.2 Natural Gas Reforming Area 37
3.3 SOFC Power Island 38
3.4 CO_2 Dehydration and Compression Area 41
3.5 Accessory Electric Plant 41
3.6 Instrumentation and Control 41
4 Pathway 1: Atmospheric-Pressure SOFC Pathway 42
4.1 Case 1-1: Baseline Plant Description 42
4.2 Case 1-1: Baseline Plant Performance 47
4.3 Case 1-1: Baseline Plant Cost Results 53
4.4 Pathway 1 Results 56
4.5 Case 1-7: Plant Description 58
4.6 Case 1-7: Plant Performance 62

4.7 Case 1-7: Plant Cost Results 68
5 Pathway 2: Pressurized-SOFC Pathway 71
5.1 Case 2-1: Baseline Plant Description 71
5.2 Case 2-1: Baseline Plant Performance 76
5.3 Case 2-1: Baseline Plant Cost Results 82
5.4 Pathway 2 Results 85
5.5 Case 2-3: Plant Description 86
5.6 Case 2-3: Plant Performance 90
5.7 Case 2-3: Plant Cost Results 96
6 Pathway 3: SOFC with Internal Reforming 99
6.1 Case 3-1: Plant Description 99
6.2 Case 3-1: Plant Performance 102
6.3 Case 3-1: Plant Cost Results 108
7 References 109

List of Exhibits

Exhibit ES-1 Pathway study matrix 8
Exhibit ES-2 Pathway efficiency results 10
Exhibit ES-3 Pathway first-year COE results (2007$) 11
Exhibit ES-4 NGFC with CCS performance and cost comparison with NGCC 12
Exhibit ES-5 NGFC without CCS performance and cost comparison with NGCC 12
Exhibit ES-6 First-Year COE comparison with other fossil-fuel power generation technologies for base natural gas price of 6.55 $/MMBtu 14
Exhibit ES-7 First-Year COE comparison with other fossil-fuel power generation technologies for natural gas price of 4.0 $/MMBtu 15
Exhibit ES-8 First-Year COE comparison with other fossil-fuel power generation technologies for natural gas price of 12.0 $/MMBtu 16
Exhibit ES-9 Influence of net capacity on NGFC plant first-year COE 17
Exhibit 1-1 Study matrix 20
Exhibit 2-1 Site ambient conditions 22
Exhibit 2-2 Site characteristics 23
Exhibit 2-3 Natural gas composition 23
Exhibit 2-4 NGFC plant configuration 26
Exhibit 2-5 CO_2 pipeline specification 28
Exhibit 2-6 Project and process contingencies 30
Exhibit 2-7 SOFC power island configuration showing section components 33
Exhibit 2-8 Catalyst and chemicals consumption and cost basis 34
Exhibit 2-9 Impact of cell degradation and cell stack replacement period 35
Exhibit 3-1 Natural gas reformer section operating conditions and assumptions 38
Exhibit 3-2 IGFC power island 39
Exhibit 3-3 Power island baseline conditions and assumptions 40
Exhibit 4-1 Case 1-1 Baseline plant block flow diagram 44
Exhibit 4-2 Case 1-1 Baseline plant stream table 45
Exhibit 4-3 Case 1-1 Baseline plant power summary (100 percent load) 48
Exhibit 4-4 Case 1-1 Baseline plant mass flow diagram 49
Exhibit 4-5 Case 1-1 Baseline plant energy flow diagram 50
Exhibit 4-6 Case 1-1 Baseline plant high-pressure steam balance 51
Exhibit 4-7 Case 1-1 Baseline plant low-pressure steam balance 51
Exhibit 4-8 Case 1-1 Baseline plant water balance 52
Exhibit 4-9 Case 1-1 Baseline plant carbon balance 52
Exhibit 4-10 Case 1-1 Baseline plant air emissions 52
Exhibit 4-11 Case 1-1 Baseline plant capital cost breakdown 54
Exhibit 4-12 Case 1-1 Baseline plant O&M cost 55
Exhibit 4-13 Case 1-1 Baseline plant cost-of-electricity breakdown 55
Exhibit 4-14 Case 1-1 Baseline plant COE sensitivity to NG price 55
Exhibit 4-15 Pathway 1 results 57
Exhibit 4-16 Case 1-7 Plant stream table 60
Exhibit 4-17 Case 1-7 Plant power summary (100 percent load) 63
Exhibit 4-18 Case 1-7 Plant mass flow diagram 64
Exhibit 4-19 Case 1-7 Plant energy flow diagram 65
Exhibit 4-20 Case 1-7 Plant high-pressure steam balance 66
Exhibit 4-21 Case 1-7 Plant low-pressure steam balance 66
Exhibit 4-22 Case 1-7 Plant water balance 66

Exhibit 4-23 Case 1-7 Plant carbon balance 67
Exhibit 4-24 Case 1-7 Plant air emissions 67
Exhibit 4-25 Case 1-7 Plant capital cost breakdown 69
Exhibit 4-26 Case 1-7 Plant O&M cost 70
Exhibit 4-27 Case 1-7 Plant cost-of-electricity breakdown 70
Exhibit 4-28 Case 1-7 Plant COE sensitivity to NG price 70
Exhibit 5-1 Case 2-1 Baseline plant block flow diagram 73
Exhibit 5-2 Case 2-1 Baseline plant stream table 74
Exhibit 5-3 Case 2-1 Baseline plant performance summary (100 percent load) 77
Exhibit 5-4 Case 2-1 Baseline plant mass flow diagram 78
Exhibit 5-5 Case 2-1 Baseline plant energy flow diagram 79
Exhibit 5-6 Case 2-1 Baseline plant high-pressure steam balance 80
Exhibit 5-7 Case 2-1 Baseline plant low-pressure steam balance 80
Exhibit 5-8 Case 2-1 Baseline plant water balance 80
Exhibit 5-9 Case 2-1 Baseline plant carbon balance 81
Exhibit 5-10 Case 2-1 Baseline plant air emissions 81
Exhibit 5-11 Case 2-1 Baseline plant capital cost breakdown 83
Exhibit 5-12 Case 2-1 Baseline plant O&M cost 84
Exhibit 5-13 Case 2-1 Baseline plant cost-of-electricity breakdown 84
Exhibit 5-14 Case 2-1 Baseline plant COE sensitivity to NG price 84
Exhibit 5-15 Pathway 2 results 85
Exhibit 5-16 Case 2-3 Plant stream table 88
Exhibit 5-17 Case 2-3 Plant performance summary (100 percent load) 91
Exhibit 5-18 Case 2-3 Plant mass flow diagram 92
Exhibit 5-19 Case 2-3 Plant energy flow diagram 93
Exhibit 5-20 Case 2-3 Plant high-pressure steam balance 94
Exhibit 5-21 Case 2-3 Plant low-pressure steam balance 94
Exhibit 5-22 Case 2-3 Plant water balance 94
Exhibit 5-23 Case 2-3 Plant carbon balance 95
Exhibit 5-24 Case 2-3 Plant air emissions 95
Exhibit 5-25 Case 2-3 Plant capital cost breakdown 97
Exhibit 5-26 Case 2-3 Plant O&M cost 98
Exhibit 5-27 Case 2-3 Plant cost-of-electricity breakdown 98
Exhibit 5-28 Case 2-3 Plant COE sensitivity to NG price 98
Exhibit 6-1 Case 3-1 Plant block flow diagram 100
Exhibit 6-2 Case 3-1 Plant stream table 101
Exhibit 6-3 Case 3-1 Plant power summary (100 percent load) 103
Exhibit 6-4 Case 3-1 Plant mass flow diagram 104
Exhibit 6-5 Case 3-1 Plant energy flow diagram 105
Exhibit 6-6 Case 3-1 Plant high-pressure steam balance 106
Exhibit 6-7 Case 3-1 Plant low-pressure steam balance 106
Exhibit 6-8 Case 3-1 Plant water balance 106
Exhibit 6-9 Case 3-1 Plant carbon balance 107
Exhibit 6-10 Case 3-1 Plant air emissions 107

Acronyms and Abbreviations

AC	Alternating current
Ac	Atomic carbon content in gas stream constituents
Ao	Atomic oxygen content in gas stream constituents
ASU	Air separation unit
ATR	Auto-thermal reformer
Btu	British thermal unit
Btu/h	British thermal unit per hour
Btu/kWh	British thermal unit per kilowatt hour
Btu/lb	British thermal unit per pound
Btu/scf	British thermal unit per standard cubic foot
C	Cost of equipment in plant section
CCS	Carbon capture and sequestration
cm	Centimeter
CO_2	Carbon dioxide
COE	Cost of electricity
Cref	Cost of equipment in reference plant area or section
CRT	Cathode ray tube
DC	Direct current
DCS	Distributed control system
DOE	Department of Energy
E	Stack inlet gas Nernst potential
EIA	Energy Information Administration
EPRI	Electric Power Research Institute
ESPA	Energy Sector Planning and Analysis
F	Capacity of study plant area or section
FCE	Fuel Cell Energy, Inc.
Fref	Capacity of reference plant area or section
ft	Foot, Feet
FY-COE	First year cost of electricity
gpm	Gallons per minute
h	Hour
H_2	Hydrogen
HHV	Higher heating value
HP	High pressure
HRSG	Heat recovery steam generator
HTX	Heat exchanger
IGCC	Integrated gasification combined cycle
IGFC	Integrated gasification fuel cell
IP	Intermediate pressure
ISO	International Standards Organization
kg/GJ	Kilogram per gigajoule
kg/h	Kilogram per hour
kJ	Kilojoules
kJ/h	Kilojoules per hour
kJ/kg	Kilojoules per kilogram
kV	Kilovolt
kW	Kilowatt
kWe	Kilowatts electric
kWh	Kilowatt-hour
lb	Pound
lb/h	Pounds per hour
lb/MWh	Pounds per megawatt hour
LCOE	Levelized cost of electricity
LHV	Lower heating value
LP	Low pressure
m	Meters
m^3/min	Cubic meter per minute
MMBtu	Million British thermal units (also shown as 10^6 Btu)
MMBtu/h	Million British thermal units (also shown as 10^6 Btu) per hour
MMkJ	Million kilojoules (also shown as 10^6 kJ)
MMkJ/h	Million kilojoules (also shown as 10^6 kJ) per hour
mol%	Composition bases on molar percentage of constituents
MPa	Megapascals
MWh	Megawatt-hour
N	Number of study plant areas or sections in parallel
Nref	Number of reference plant areas or sections in parallel
N/A	Not applicable
NETL	National Energy Technology Laboratory
NG	Natural gas
NGCC	Natural gas combined cycle
NGFC	Natural gas fuel cell plant
NOx	Oxides of nitrogen
O&M	Operation and maintenance
OP	Overpotential of cell
PC	Pulverized coal
POTW	Publicly Owned Treatment Works
ppmv	Parts per million volume
psia	Pounds per square inch absolute
psig	Pounds per square inch gage
R&D	Research and development
S	Scaling factor for plant areas or section cost
SGC	Synthesis gas cooler
SOFC	Solid Oxide Fuel Cell
SO_2	Sulfur dioxide
T	Temperature

TOC	Total overnight cost
TPC	Total plant cost
Tonne	Metric Ton (1000 kg)
T&S	Transport and storage
V	Voltage of cell
vol%	Volume percent
$/MMBtu	Dollars per million British thermal units

Executive Summary

Energy Sector Planning and Analysis (ESPA) Services, under contract to the Department Of Energy's (DOE) National Energy Technology Laboratory (NETL), has estimated the performance and costs following three development pathways for natural gas fuel cell (NGFC) plant configurations with and without carbon capture and sequestration (CCS). The fuel cell technology applied is the planar, solid oxide fuel cell (SOFC) having split anode and cathode off-gas streams.

The results quantify the performance and cost benefits for a series of projected gains made through the development of advances in the component technologies or improvements in plant operation and maintenance. The design and cost bases for this pathway study closely follows the bases applied in the NETL, 2010, Bituminous Baseline report so that direct performance and cost comparisons can be made with the conventional fossil-fuel power plant results estimated in that report. [1]

Performance and cost projections for a baseline integrated gasification combined cycle (IGCC) power plant, a baseline natural gas combined cycle (NGCC) power plant, and prior coal-based integrated gasification fuel cell (IGFC) pathways, are compared with the results for the NGFC pathways. The results represent the potential future benefits of NGFC technology development. They also provide DOE with a basis to select the most appropriate development path for NGFC, and to measure and prioritize the contribution of its R&D program to future power systems technology.

This report covers the plant pathway scenarios characterized in Exhibit ES-1. The pathway cases listed in Exhibit ES-1 were analyzed in a previous report. [2] This report presents results for these cases with two significant changes:

- A cost allocation was included in the previous report for transport and storage (T&S) of the carbon dioxide. The decision was to remove this cost from the pathway cases since the T&S cost will vary as a function of site and application.
- The constraint on the water content in the anode gas assumed in the previous report was removed. A criterion for a maximum of 50 mole-percent water vapor in the anode gas had been hypothesized based on SOFC materials corrosion concerns. [2] This uncertain limitation translates to a maximum fuel utilization of 75 percent that was used in the cases reported in the previous report. The previous report does include results for cases 1-7, 2-3, and 3-1 for 90 percent fuel utilization with the water tolerance criteria relaxed. This report eliminates the water constraint for all the pathway cases and allows for 90 percent fuel utilization for all pathway cases.

Pathway 1 represents the NGFC plant with atmospheric-pressure SOFC and using a low-pressure, external auto-thermal reformer (ATR). Case 1-1 represents the baseline case for atmospheric-pressure SOFC technology, and applies SOFC operating, performance, and cost specifications representative of the current status of the developing SOFC technology. The high cold gas efficiency of the ATR, about 90 percent, and the high methane content of its product syngas, about 30 mole-percent under dry conditions, promote attractive plant performance and cost.

The baseline in Case 1-1 represents current performance and cost expectations for the SOFC technology. This baseline case is subject to both performance and cost variations in subsequent Cases 1-2 through 1-7, representative of a pathway development scenario progressing though cumulative advances in the cell degradation, the cell overpotential, the cell cost, the inverter efficiency, and the plant availability.

Pathway 2 applies a high-pressure auto-thermal reformer, and considers a configuration for an NGFC plant using pressurized SOFC. Pressurized SOFC can be configured in two general, alternative arrangements:

1. The anode off-gas oxy-combustor is followed by hot gas expander power generation (expansion ratio about 18). This requires an advanced expander needing CO_2 or steam cooling of hot parts. A heat recovery steam generator (HRSG) produces steam for power generation, and the remaining, low-pressure, wet CO_2 stream is dehydrated and compressed (compression ratio about 149).
2. The anode off-gas oxy-combustor is followed directly by a HRSG for steam bottoming power generation. The remaining, high-pressure, wet CO_2 stream is dehydrated and compressed (compression ratio about 8.4).

Configuration 2 is expected to be the least complex and most effective approach and is utilized for this evaluation. Baseline Case 2-1 is also followed by modifications representing performance and cost pathway development steps in Cases 2-2 through 2-3.

Exhibit ES-1 Pathway study matrix

Case	Pathway Parameter	Fuel Utilization (%)	SOFC Pressure/ Overpotential	Capacity Factor (%)	Degradation (%/1000 hr)	Stack Cost ($/kW SOFC)	Inverter Eff (%)
	PATHWAY 1: ATMOSPHERIC-PRESSURE SOFC WITH EXTERNAL NG REFORMING						
1-1	**Base Case**	90	Atm/140 mV	80	1.5	296	97
1-2	Reduced Degradation	90	Atm/140 mV	80	**0.2**	296	97
1-3	Cell Performance	90	Atm/**70 mV**	80	0.2	296	97
1-4	Capacity Factor	90	Atm/70 mV	**85**	0.2	296	97
1-5	SOFC Cost Reduction	90	Atm/70 mV	85	0.2	**268**	97
1-6	Inverter Efficiency	90	Atm/70 mV	85	0.2	268	**98**
1-7	Capacity Factor	90	Atm/70 mV	**90**	0.2	268	98
	PATHWAY 2: PRESSURIZED-SOFC WITH EXTERNAL NG REFORMING						
2-1	SOFC Pressure	90	**285 psia/**70 mV	85	0.2	442	98
2-2	SOFC Cost Reduction	90	285 psia/70 mV	85	0.2	**414**	98

Case	Pathway Parameter	Fuel Utilization (%)	SOFC Pressure/ Overpotential	Capacity Factor (%)	Degradation (%/1000 hr)	Stack Cost ($/kW SOFC)	Inverter Eff (%)
2-3	Capacity Factor	90	285 psia/70 mV	**90**	0.2	414	98
	PATHWAY 3: ATMOSPHERIC-PRESSURE SOFC WITH INTERNAL REFORMING						
3-1	**Internal Reforming**	90	Atm/70 mV	85	0.2	**Parameter**	98

In Pathway 3, the plant arrangement uses natural gas reforming internal to a hypothetical, as-yet undeveloped, atmospheric-pressure fuel cell having inserted reforming catalyst surfaces. Internal SOFC reforming catalysts are assumed to function successfully in this hypothetical arrangement, and the evaluation estimates the maximum acceptable cost of this advanced SOFC cell unit with these internal reforming surfaces added. The internal reforming of natural gas provides an additional source of cell cooling that promotes further increased plant efficiency.

Exhibit ES-2 compares the plant net efficiency for the NGFC pathway cases with an advanced F-Frame NGCC with CCS [1]. Pressurization increases the plant net efficiency significantly. The NGFC pathway cases climb to efficiency greater than 65 percent for the pathway 3 scenario having advanced SOFC with internal reforming. All of the NGFC cases have efficiencies significantly above the conventional NGCC plant with or without CCS.

Exhibit ES-2 Pathway efficiency results

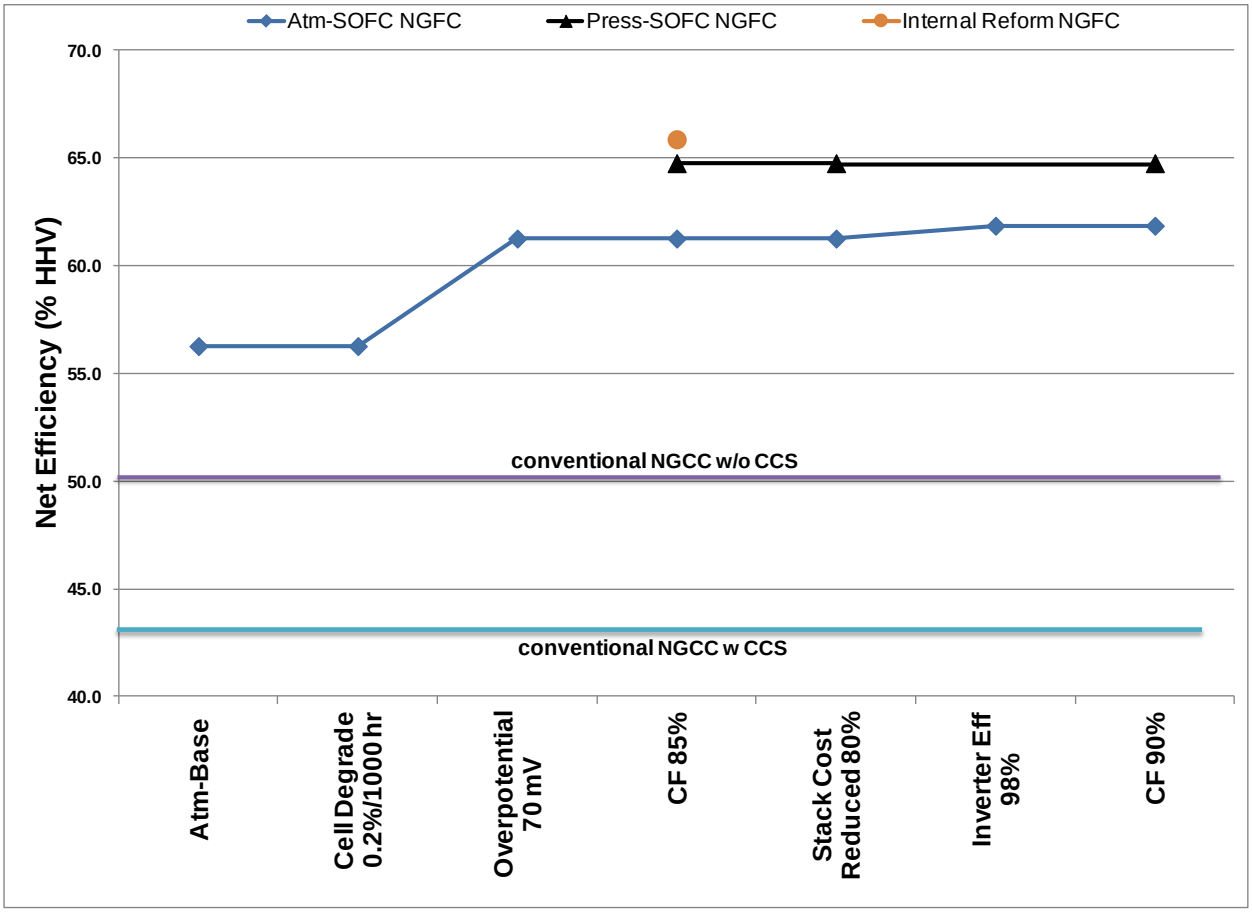

A similar pathway plot is shown in Exhibit ES-3for the first-year cost of electricity (COE), in 2007 dollars, without T&S charges. The price of natural gas is assumed to be 6.55 $/MMBtu in the plot. Here, the pathway scenario 3 COE is included, even though the cost of the fuel cell stack with internal reforming has not been projected on an engineering basis, using a range of stack costs from the base value of 268 $/kW SOFC output to 490 $/kW SOFC output, representing an increase to the stack cost of up to 194 $/kW for the internal catalyst structures. The COE for the NGFC pathway progresses to a level near the COE for conventional NGCC without CCS, and about 25 $/MWh below the COE for NGCC with CCS. The COE for pressurized-SOFC is higher than that of the atmospheric-pressure SOFC NGFC pathway cases due to the great increase in the stack enclosure cost with pressurization.

Exhibit ES-3 Pathway first-year COE results (2007$)

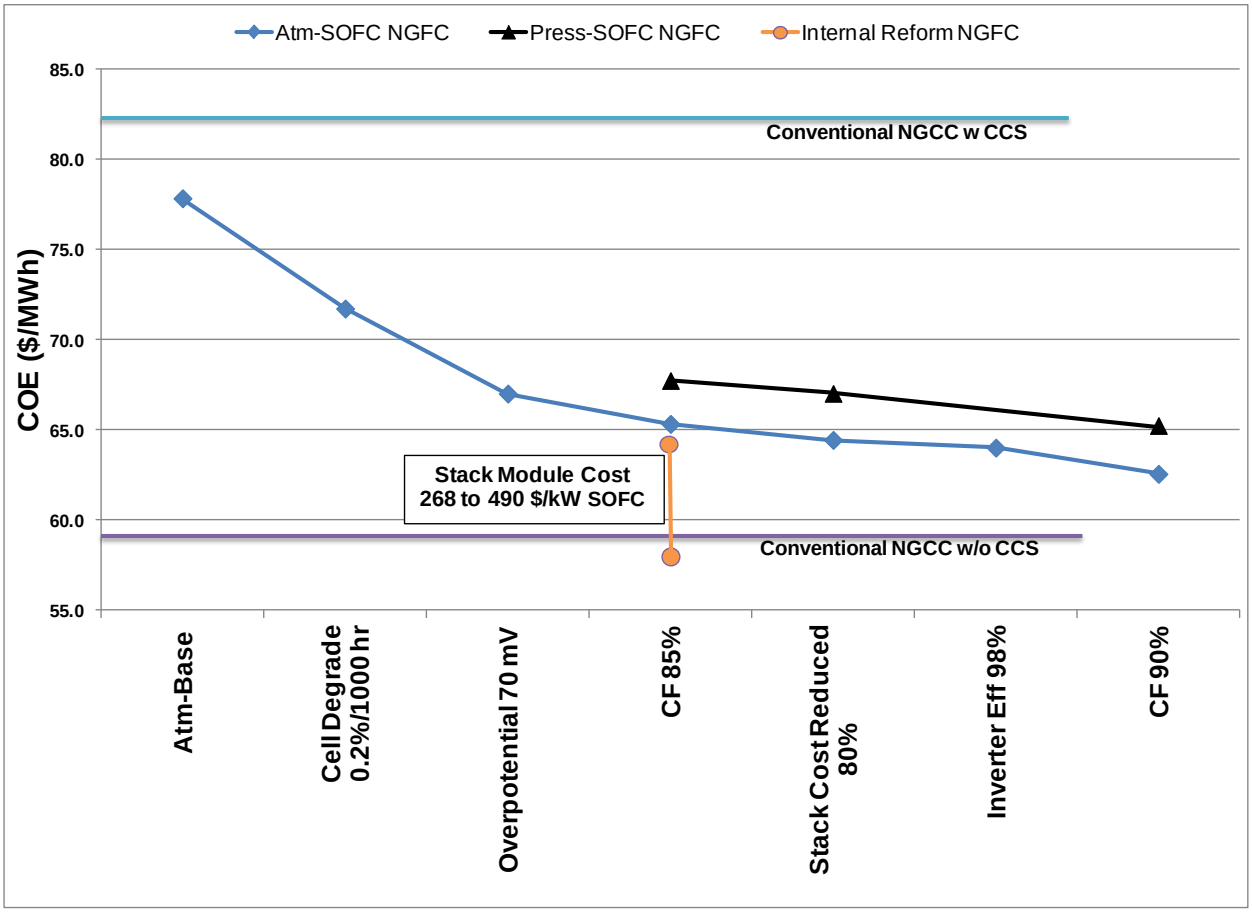

Comparison between the performance and cost of NGFC pathway cases with CCS and the conventional NGCC with CCS is made in tabulated form in Exhibit ES-4. The NGFC pathway cases consume less than half as much water as the NGCC plants and have almost zero CO_2 emission. Note that in the pressurized-SOFC cases the CO_2 emission is estimated to be higher due to water condensation from the wet CO_2 product stream when it is at elevated pressure. The Total Overnight Costs of the NGFC pathway cases are comparable to, or lower than, those of the NGCC plant.

The baseline Case 1-1 NGFC plant has COE almost 10-percent lower than the conventional NGCC plant, and the pathway advances drop the COE more than 23 $/kWh. Note that the Case 1-1 NGFC plant has a capacity factor of 80 percent versus 85 percent for the conventional NGCC plant. The avoided CO_2 cost for the baseline NGFC plant is about 30-percent lower than that of the NGCC plant, and drops significantly for the advanced pathway cases. Exhibit ES-4 applies an assumed fuel cell cost for the internal reforming configuration that represents a 46-percent increase in the fuel cell stack cost, and shows the potential for significant advantage for this NGFC configuration over NGCC.

Exhibit ES-4 NGFC with CCS performance and cost comparison with NGCC

	NGCC[1] with CCS	NGFC Case 1-1	NGFC Case 1-7	NGFC Case 2-1	NGFC Case 2-3	NGFC Case 3-1[2]
Efficiency (% HHV)	42.8	56.3	61.8	64.8	64.8	65.9
Water Consumed (gpm/MW)	6.3	1.8	1.5	1.1	1.1	1.3
CO_2 Emitted (kg/MWh)	42.6	0.3	0.3	4.4	4.4	0.3
TOC ($/kW)	1,497	1,392	1,149	1,413	1,375	1,154
COE ($/kWh) @ NG price 6.55 $/MMBtu	82.7	77.9	62.6	67.8	65.3	61.2
Avoided CO_2 Cost ($/ton)	74	42.8	8.3	20.2	14.5	5.1

1 – Uses a 7FB gas turbine and achieves 90% carbon capture
2 – An intermediate fuel cell stack cost with internal catalyst of 390 $/kW SOFC output was assumed

Comparison between the performance and cost of NGFC without CCS pathway cases and the conventional NGCC without CCS is made in tabulated form in Exhibit ES-5. Here, only the advanced NGFC technology, Case 1-7, has lower COE than the reference NGCC without CCS when applying a natural gas price of 6.55 $/MMBtu (HHV). This results from the relatively high cost of the NGFC equipment relative to the NGCC equipment without CCS. As the price of natural gas increases, the highly efficient NGFC becomes more cost competive with NGCC without CCS.

Exhibit ES-5 NGFC without CCS performance and cost comparison with NGCC

	NGCC[1] without CCS	NGFC Case 1-1	NGFC Case 1-7	NGFC Case 2-1	NGFC Case 2-3
Efficiency (% HHV)	50.2	59.2	64.6	67.9	67.9
Water Consumed (gpm/MW)	3.3	1.4	1.2	0.6	0.6
CO_2 Emitted (kg/MWh)	365	308	282	268	268
TOC ($/kW)	718	1,182	963	1,220	1,184
COE ($/kWh) @ NG price 6.55 $/MMBtu	58.9	71.4	57.7	62.4	60.0

1 – Uses a 7FB gas turbine

Exhibit ES-6 plots the first-year COE for the atmospheric-pressure SOFC pathway 1 technologies if a CO_2 emissions price is included. Also plotted are results for conventional fossil-fuel power plant technologies (supercritical PC without CCS, and NGCC with and without CCS) from the Bituminous Baseline report, [1] and results for coal-based IGFC projection reported in

the IGFC plant pathway study. [3] Included is an IGFC plant that incorporates the injection of natural gas into the coal syngas, with improved plant performance and cost resulting. The natural gas price is set at 6.55 $/MMBtu in the exhibit, the price basis applied in the Bituminous Baseline report. [1]

The curves for the NGFC cases and the IGFC cases are nearly horizontal lines due to their very nearly 100 percent carbon capture, and consequently, small CO_2 emissions. The coal-based IGFC plant pathways are comparable or lower in COE than the NGFC pathway because of the much lower price of coal than natural gas (1.65 $/MMBtu versus 6.55 $/MMBtu). All of the fuel cell cases show advantage over the NGCC with CCS, except for the Case 1-1, baseline conventional coal gasifier IGFC case. Greatest cost advantage is shown for the advanced NGFC Case 1-7, and the advanced IGFC Case 3-7 with catalytic gasifier. No pressurized-SOFC cases are included due to their generally higher COE results.

The sensitivity of the plant cost-of-electricity (COE) to variable natural gas price is also identified for all of the cases in each pathway in Exhibit ES-7 for natural gas price of 4.0 $/MMBtu, and Exhibit ES-8 for natural gas price of 12.0 $/MMBtu. Lower natural gas price improves the COE of NGFC relative to the COE of coal-based IGFC. Increased natural gas price improves the COE of NGFC relative to the COE of NGCC due to the much higher efficiency of the NGFC plant.

Exhibit ES-6 First-Year COE comparison with other fossil-fuel power generation technologies for base natural gas price of 6.55 $/MMBtu

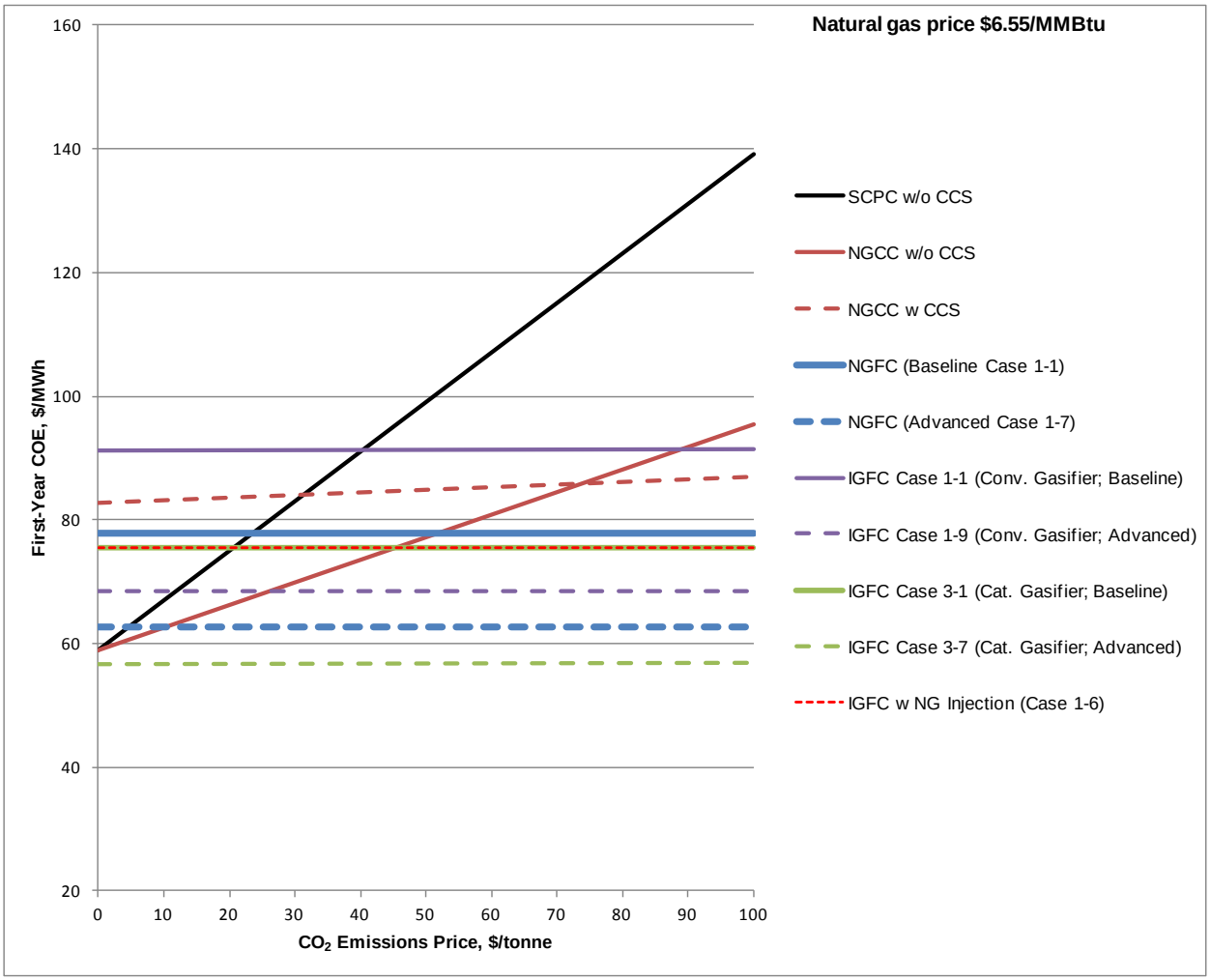

Exhibit ES-7 First-Year COE comparison with other fossil-fuel power generation technologies for natural gas price of 4.0 $/MMBtu

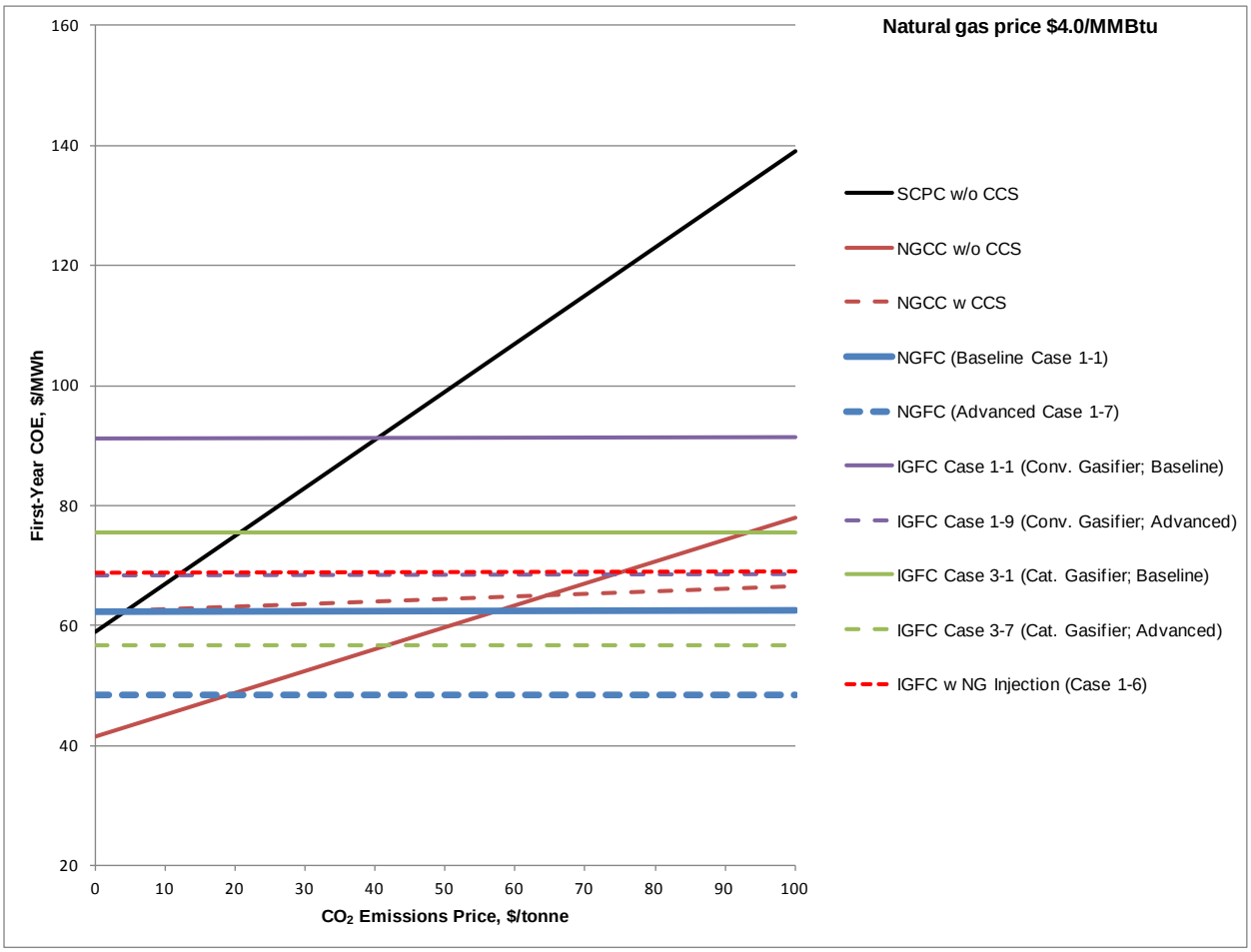

Exhibit ES-8 First-Year COE comparison with other fossil-fuel power generation technologies for natural gas price of 12.0 $/MMBtu

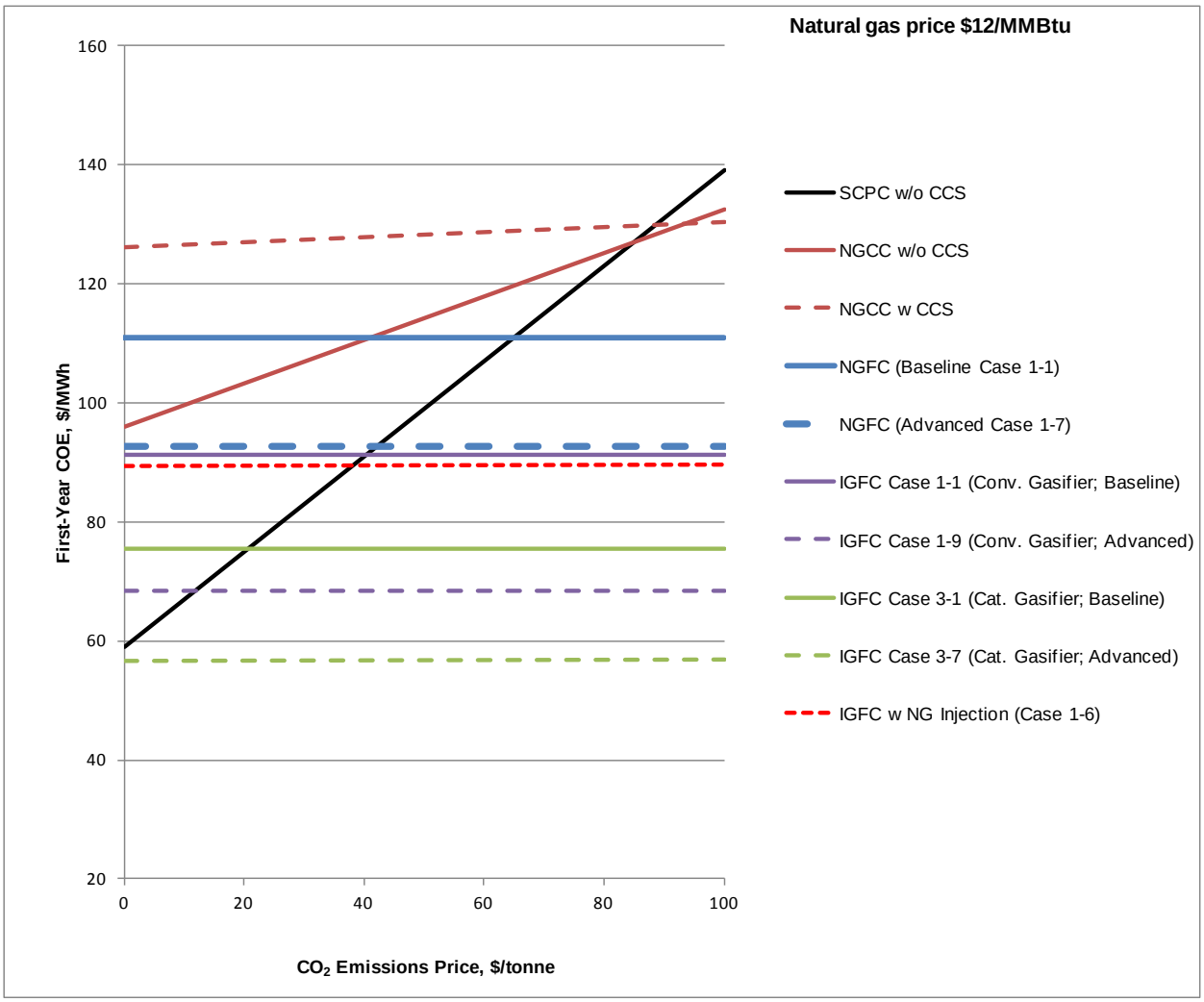

Estimates of the first-year COE as a function of the net plant generating capacity are shown in Exhibit ES-9. The SOFC module cost is assumed constant for these estimates. The decreasing COE with capacity results from the economies of scale for the balance of plant. Over the capacity range from the base value of 550 MW down to the reduced scale of 100 MW, the first-year COE roughly increases by a factor of about 50%.

Exhibit ES-9 Influence of net capacity on NGFC plant first-year COE

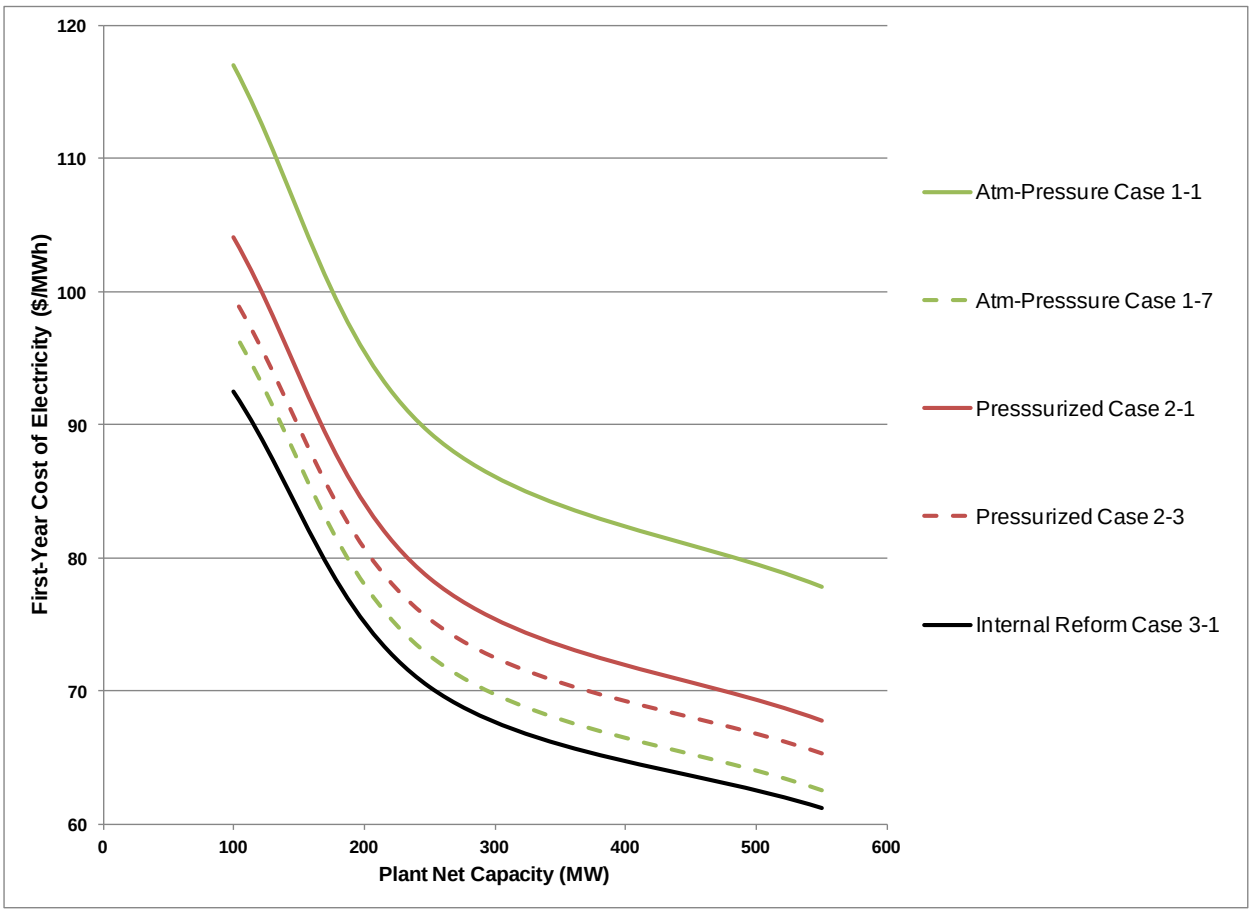

General conclusions that can be drawn are:

- Pressurized NGFC is projected to have substantially higher COE (for the reference natural gas price) than Atm-pressure NGFC due to its high capital cost, although it provides an efficiency advantage over Atm-pressure NGFC.
- The COE for the NGFC power plant is dominated by the cost of natural gas, with capital charges also being important.
- The COE for the NGFC power plant with CCS is attractive compared to the conventional NGCC with CCS, but advances in NGCC technologies will narrow this advantage.

- The NGFC power plant with internal reforming in the SOFC has the potential for very high plant efficiency and FY-COE in the low-to-mid 60 $/MWh, comparable to the catalytic IGFC plant FY-COE.
- The NGFC and the IGFC systems are fairly competitive with each other at NG prices around the middle of the range of NG prices projected in the near future ($4 - $6/MMBtu) especially considering the significant uncertainties associated with the outcomes of the R&D programs.
- The cost of the SOFC stack module with internal reforming surfaces incorporated (Case 3-1) could be as high as 1,200 $/kW SOFC AC output for the FY-COE of the NGFC plant to equal that of the reference NGCC plant with CCS (82.7 $/MWh). This is a factor of four times the estimated base SOFC stack module cost without catalyst surface.
- While the COE of the NGFC power plant with CCS is potentially significantly lower than the COE of NGCC with CCS, it will be difficult for the NGFC plant without CCS to compete with NGCC without CCS. The competitiveness of NGFC without CCS increases as the price of natural gas increases.
- It appears that only the advanced NGFC plant without CCS using SOFC internal reforming (Case 3-1) might have cost characteristics superior to the NGCC plant without CCS.
- Increased natural gas price will improve the COE of the NGFC plant relative to the COE of NGCC due to the much higher efficiency of the NGFC plant, although higher natural gas price will tend to favor the coal-based IGFC plant.
- The NGFC plant cost is sensitive to plant capacity in the 100 to 550 MW range, although is less sensitive than NGCC, with the FY-COE of NGFC power generation estimated to increase about fifty percent as the plant capacity is reduced from 550 to 100 MW. Further review is recommended to refine the labor requirements and appropriate scaling metrics for the balance of plant equipment.
- The conventional coal gasifier-based IGFC plant has COE comparable to the NGFC plant, and the catalytic coal gasifier-based IGFC plant has a significant COE advantage over the NGFC plant for natural gas prices greater than about 9 $/MMBtu.
- Lower natural gas price will improve the COE of the NGFC plant relative to the COE of coal-based IGFC and reduce the advantage of NGFC over NGCC.
- Conventional coal gasifier-based IGFC with natural gas injection is an attractive option for low cost power generation with CCS providing the natural gas prices remain at low or moderate levels.

1 Introduction

Energy Sector Planning and Analysis (ESPA) Services, under contract to the Department Of Energy's (DOE) National Energy Technology Laboratory (NETL), has estimated the performance and costs following three development pathways for natural gas fuel cell (NGFC) plant configurations with and without carbon capture and sequestration (CCS). The fuel cell technology applied is the planar, solid oxide fuel cell (SOFC) having split anode and cathode off-gas streams.

This report presents the results of a Pathway Study for natural gas fueled, fuel cell (NGFC) power systems with CCS. In parallel with this, the performance and cost of corresponding NGFC power systems without CCS are also reported. The results quantify the performance and cost benefits for a series of projected gains made through the development of advances in the component technologies or improvements in plant operation and maintenance. The design and cost bases for this pathway study closely follows the bases applied in the NETL 2010 Bituminous Baseline report so that direct performance and cost comparisons can be made with the conventional fossil-fuel power plant results estimated in that report. [1]

Performance and cost projections for a baseline integrated gasification combined cycle (IGCC) power plant, a baseline natural gas combined cycle (NGCC) power plant, and prior coal-based integrated gasification fuel cell (IGFC) pathways, are compared with the results for the NGFC pathways. The results represent the potential future benefits of NGFC technology development. They also provide DOE with a basis to select the most appropriate development path for NGFC, and to measure and prioritize the contribution of its research and development (R&D) program to future power systems technology.

This report covers the plant pathway scenarios characterized in Exhibit 1-1. Pathway 1 represents the NGFC plant with atmospheric-pressure SOFC and using a low-pressure, external auto-thermal reformer (ATR). Case 1-1 represents the baseline case for atmospheric-pressure SOFC technology, and applies SOFC operating, performance, and cost specifications representative of the current status of the developing SOFC technology. The high cold gas efficiency of the ATR, about 90 percent, and the high methane content of its product syngas, about 30 mole-percent under dry conditions, promote attractive plant performance and cost.

The baseline in Case 1-1 represents current performance and cost expectations for the SOFC technology. This baseline case is subject to both performance and cost variations in subsequent Cases 1-2 through 1-7, representative of a pathway development scenario progressing though cumulative advances in the cell degradation, the cell overpotential, cell stack cost, inverter efficiency, and plant availability.

Pathway 2 applies a high-pressure auto-thermal reformer, and considers a configuration for an NGFC plant using pressurized SOFC. Pressurized SOFC can be configured in two general, alternative arrangements:

1. The anode off-gas oxy-combustor is followed by hot gas expander power generation (expansion ratio about 18). This requires an advanced expander needing CO_2 or steam cooling of hot parts. A heat recovery steam generator (HRSG) produces steam for power generation, and the remaining, low-pressure, wet CO_2 stream is dehydrated and compressed (compression ratio about 149).

2. The anode off-gas oxy-combustor is followed directly by a HRSG for steam bottoming power generation. The remaining, high-pressure, wet CO_2 stream is dehydrated and compressed (compression ratio about 8.4).

Configuration 2 is expected to be the least complex and most effective approach and is utilized for this evaluation. Baseline Case 2-1 is also followed by modifications representing performance and cost pathway development steps in Cases 2-2 through 2-3.

Exhibit 1-1 Study matrix

Case	Pathway Parameter	Fuel Utilization (%)	SOFC Pressure/ Overpotential	Capacity Factor (%)	Degradation (%/1000 hr)	Stack Cost ($/kW SOFC)	Inverter Eff (%)
	PATHWAY 1: ATMOSPHERIC-PRESSURE SOFC WITH EXTERNAL NG REFORMING						
1-1	**Base Case**	90	Atm/140 mV	80	1.5	296	97
1-2	Reduced Degradation	90	Atm/140 mV	80	**0.2**	296	97
1-3	Cell Performance	90	Atm/**70 mV**	80	0.2	296	97
1-4	Capacity Factor	90	Atm/70 mV	**85**	0.2	296	97
1-5	SOFC Cost Reduction	90	Atm/70 mV	85	0.2	**268**	97
1-6	Inverter Efficiency	90	Atm/70 mV	85	0.2	268	**98**
1-7	Capacity Factor	90	Atm/70 mV	**90**	0.2	268	98
	PATHWAY 2: PRESSURIZED-SOFC WITH EXTERNAL NG REFORMING						
2-1	SOFC Pressure	90	**285 psia**/70 mV	85	0.2	442	98
2-2	SOFC Cost Reduction	90	285 psia/70 mV	85	0.2	**414**	98
2-3	Capacity Factor	90	285 psia/70 mV	**90**	0.2	414	98
	PATHWAY 3: ATMOSPHERIC-PRESSURE SOFC WITH INTERNAL REFORMING						
3-1	**Internal Reforming**	90	Atm/70 mV	85	0.2	**Parameter**	98

In Pathway 3, the plant arrangement uses natural gas reforming internal to a hypothetical, as-yet undeveloped, atmospheric-pressure fuel cell having inserted reforming catalyst surfaces. Internal SOFC reforming catalysts are assumed to function successfully in this hypothetical arrangement, and the evaluation estimates the maximum acceptable cost of this advanced SOFC cell unit with these internal reforming surfaces added. The internal reforming of natural gas provides an additional source of cell cooling that promotes further increased plant efficiency.

The sensitivity of the plant cost-of-electricity (COE) to variable natural gas price is also identified for all of the cases in each pathway.

The balance of this report is organized as follows:

- Section 2 provides the basis for the technical and cost evaluations.
- Section 3 described the major plant components that are applied throughout the case studies.
- Section 4 describes the Pathway 1 plant simulations and presents the results for the atmospheric-pressure SOFC, NGFC cases and their corresponding pathway parameters. NGFC with and without CCS are considered.
- Section 5 describes the Pathway 2 plant simulations and presents the results for the pressurized-SOFC, NGFC cases and their corresponding pathway parameters. NGFC with and without CCS are considered.
- Section 6 describes the Pathway 3 plant simulations and presents the results for the atmospheric-pressure SOFC, NGFC cases with internal reforming, and their corresponding pathway parameters. Only the configuration with CCS is considered here.
- Section 7 provides the reference list.

2 Pathway Study Basis

This document characterizes multiple configurations of a NGFC plant, all configurations incorporating carbon capture and sequestration, and estimates overall plant performance and cost. The SOFC simulations represent the expected operating conditions and performance capabilities of planar fuel cell technology, having split cathode and anode off-gas steams, and operating at both atmospheric-pressure and elevated-pressure conditions.

The design and cost bases for this evaluation have been largely extracted from the NETL 2010 Bituminous Baseline Report [1] so that these NGFC plant results will be able to be directly compared to the baseline results for IGCC, pulverized coal (PC), and NGCC plants presented in the Bituminous Baseline Report.

For each of the plant configurations in this study, a ChemCad process simulator (commercial process simulator by ChemStations, Houston, TX) model was developed and used to generate material and energy balances, which in turn were used as the design basis for the major equipment items. The major equipment characterizations were used to generate capital and operating cost estimates for the NGFC plants. Performance and process limits were based upon published reports, information obtained from vendors and users of the technology, performance data from design/build utility projects, and/or best engineering judgment as described in the Bituminous Baseline Report. [1]

Capital and operating costs for most of the conventional equipment items were scaled from estimates made in the Bituminous Baseline Report. A current-dollar, first-year COE was calculated for each of the cases and is reported as the revenue requirement figure-of-merit.

The balance of this section documents the design basis common to all of the study cases, as well as environmental targets and cost assumptions applied in the study.

2.1 Site Description

The plants in this study apply the site description assumptions used in the Bituminous Baseline Report. [1] The plants are fueled by natural gas, and are assumed to be located at a generic Midwestern site (Exhibit 2-2) operating at International Standards Organization (ISO) ambient conditions (Exhibit 2-1).

Exhibit 2-1 Site ambient conditions

Elevation, m (ft)	0
Barometric Pressure, MPa (psia)	0.10 (14.696)
Design Ambient Temperature, Dry Bulb, °C (°F)	15 (59)
Design Ambient Temperature, Wet Bulb, °C (°F)	11 (51.5)
Design Ambient Relative Humidity, %	60

Exhibit 2-2 Site characteristics

Location	Greenfield, Midwestern USA
Topography	Level
Size, acres	150
Transportation	Rail
Water	Municipal (50%) / Groundwater (50%)
Access	Land locked, having access by train and highway
CO_2 Storage	Compressed to 15.3 MPa (2,215 psia), transported 80 kilometers (50 miles) and sequestered in a saline formation at a depth of 1,239 meters (4,055 feet)

2.2 Design Fuel

Natural gas is a fuel that can be effectively utilized by the SOFC technology, and the design basis composition is the same as used in the Bituminous Baseline Report for NGCC plants (Exhibit 2-3). It is assumed that the natural gas has a total sulfur content of 5 ppmv and has no significant trace element content.

Exhibit 2-3 Natural gas composition

Component		Volume Percentage	
Methane	CH_4	93.1	
Ethane	C_2H_6	3.2	
Propane	C_3H_8	0.7	
n-Butane	C_4H_{10}	0.4	
Carbon Dioxide	CO_2	1.0	
Nitrogen	N_2	1.6	
	Total	100.0	
	LHV		**HHV**
kJ/kg	47,454		52,581
MJ/scm	34.71		38.46
Btu/lb	20,410		22,600
Btu/scf	932		1,032

Note: Fuel composition is normalized and heating values are calculated

2.3 SOFC Power Island Characterization

Several assumptions were applied to estimate the performance of the NGFC power island. These assumptions were obtained from SOFC test data and internal vendor reports.

2.3.1 Estimation of Fuel Cell Operating Voltage

The fuel cell operating voltage has a large impact on the total plant performance and cost. An experimental basis or detailed modeling basis for estimating the SOFC operating voltage has not yet been established. For the pathway study cases, the SOFC cell operating potential has been estimated based on the evaluation of representative stack test data, using the difference between the anode inlet Nernst potential and a calibration-based over-potential to determine the operating potential. Thus, the operating voltage, V, is estimated as

$$V = E - OP$$

where E is the stack anode-inlet Nernst potential as calculated from the anode and cathode gas compositions, and OP is the calibration-based overpotential value. The Nernst potential is a function of the anode gas molar ratio of hydrogen to water vapor, the cathode gas oxygen mole fraction, the temperature, and pressure. [4] This procedure provides operating voltages that are comparable to SOFC vendor test results.

2.3.2 SOFC Carbon Deposition Control

The SOFC stack inlet anode gas composition can induce the formation of solid carbon deposits, which can disrupt the normal performance of the stack. [4] A criterion is applied in all of the cases to ensure anode gas inlet conditions where carbon deposition should not occur. The criterion for carbon deposit-free behavior is

$$Ao / Ac > 2.0$$

where Ao is the inlet anode gas total atomic oxygen content (with the main oxygen-containing species being CO, CO_2, and H_2O), and Ac is the inlet anode gas total atomic carbon content (with the main species being CH_4, CO, and CO_2). Anode gas recirculation using hot gas blowers, or syngas jet pumps maintains the inlet anode gas composition in a safe range by recirculating sufficient water vapor to maintain this criteria.

2.3.3 Estimation of Steam Bottoming Cycle Performance

The anode off-gas stream is combusted with oxygen, providing a hot combustion gas that passes through a heat recovery steam generation system that produces high-pressure process steam, low-pressure process steam, and high-pressure steam for power generation in a steam bottoming cycle. The steam bottoming cycle is a subcritical steam cycle that varies greatly in its steam conditions and capacity in the study cases, providing a relatively small proportion of the total plant generation output. In some cases the heat recovery temperature available is relatively low and results in poor steam superheat conditions. Rather than perform detailed design for each of these unique steam bottoming cycles, a correlation method was applied that relates the steam bottoming cycle efficiency to the flue gas temperature available for steam generation. [5]

For steam cycles limited to subcritical conditions, the correlation for the bottoming cycle efficiency is

$$\text{Efficiency (\% of heat absorbed)} = -0.000048223\ T^2 + 0.100981\ T - 5.747913$$

where T is the heat recovery inlet gas temperature (°C). For inlet temperatures greater than 648 °C, the efficiency is limited to 39.45 percent of the heat absorbed.

2.4 Plant Characteristics

The basis for the selection of several key plant characteristics is discussed below.

2.4.1 Plant Capacity Factor

The capacity factor for the baseline NGFC plant is assumed to be 80 percent, identical to that of the Bituminous Baseline Report IGCC plants, with the plant operating at 100 percent of its rated capacity. Other pathway study cases consider the economic benefits of increased plant capacity factors that will be realized with improved plant availability through greater operating experience, optimized maintenance procedures, and advanced monitoring. This study assumes that the plant would be dispatched any time it is available and would be capable of generating maximum capacity when online. Therefore the capacity factor and plant availability are equal.

2.4.2 Plant Sparing Philosophy

No major equipment spares are utilized in the plant. The SOFC cell stack is designed with excess cell capacity that can be activated during operation to maintain the fuel cell output nearly constant in response to cell performance degradation.

2.4.3 Plant Generating Capacity

The plant net generating capacity for all of the study cases is 550 MWe. This capacity was selected so that the plants would be comparable to other fossil fuel plants assessed in the Bituminous Baseline Report.

2.4.4 Number of Parallel Process Trains

All of the plants consist of single train processing for the air separation unit (ASU), the natural gas reformer area, and the oxy-combustion, steam-cycle power island, as is illustrated in Exhibit 2-4. The CO_2 dehydration and compression system consists of four parallel trains. The fuel cell system, though, is highly modular, consisting of six to seven parallel SOFC trains (blowers, heat exchangers, SOFC modules) with a total of 292 to 336 stack modules contained in the SOFC modules having the ability for individual shutdown and bypass. It is expected that

- NGFC part load performance will be limited by syngas-supply component (reformer, ASU) and heat recovery component (oxy-comb, HRSG, steam cycle) turndown limitations.
- The SOFC system is highly modular and is designed for shutdown and bypass of individual stack modules, so turndown will not limited.
- Expect NGFC plant turndown capability should be comparable to IGCC with CCS.
- Load follow capability of NGFC may be limited by SOFC heat-up rate constraints.

Exhibit 2-4 NGFC plant configuration

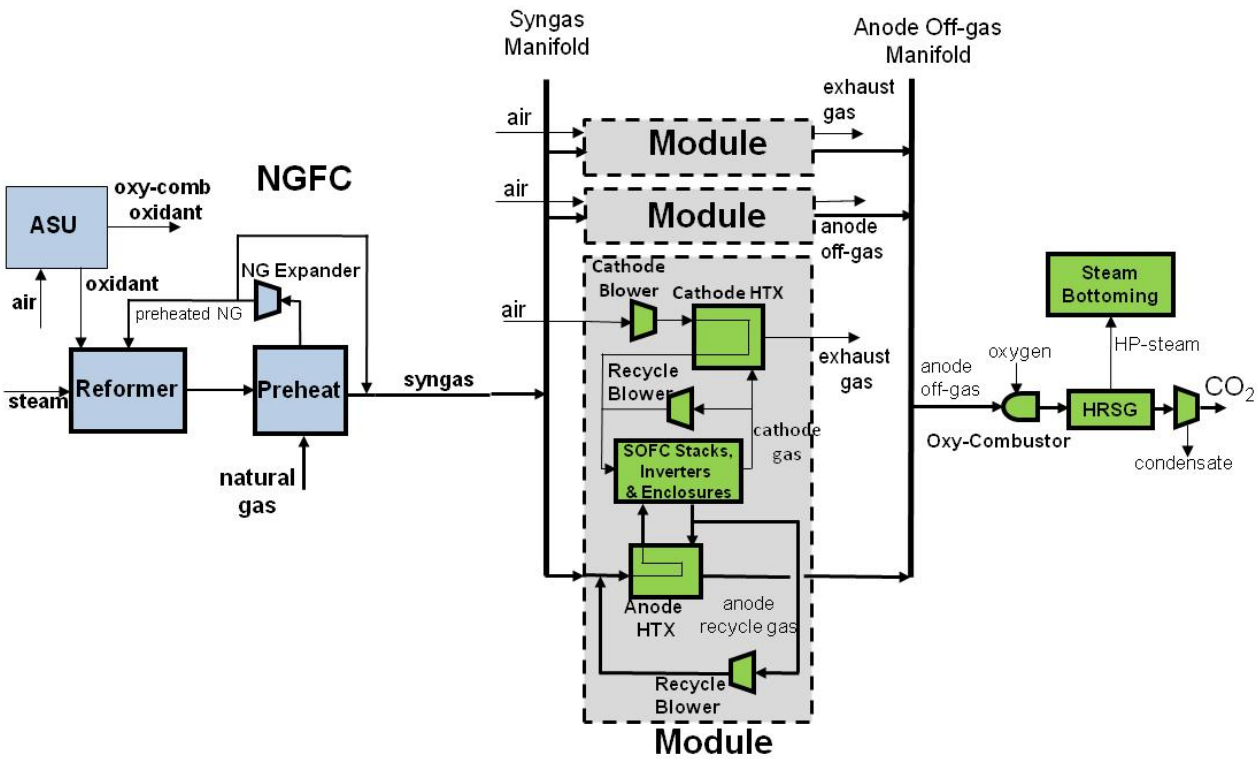

2.4.5 Natural Gas Reforming Technology

The natural gas feed stream to the plant, delivered at 500 psia, is first preheated and expanded to the reformer working pressure. A portion of the natural gas feed (40 percent) is reformed with steam and oxidant in an ATR to generate a high-heating value syngas. [6] [7] This is considered the most effective method to convert natural gas into a high-heating value syngas. This syngas is mixed with the remainder of the natural gas to yield a syngas having a methane content of about 30 mole-percent. In Pathway 3 the natural gas is reformed internally in an advanced SOFC unit having integral catalyst surfaces.

2.4.6 Natural Gas Desulfurization Technology

The natural gas is desulfurized from its assumed 5 ppmv total sulfur content reduced to 100 ppbv total sulfur using the low-temperature, TDA Research Inc. SulfaTrap™ sorbent before it is introduced to the plant. [9]

2.4.7 SOFC Power Island Technology

The SOFC power island generating components consist of a natural gas expander that expands the natural gas from its high-pressure condition down to the operating pressure of the reformer unit; a syngas expander that expands the syngas from its reformer outlet condition down to the operating pressure of the fuel cell unit; the SOFC fuel cell unit with DC-AC inverters; an anode

off-gas oxy-combustor; a heat recovery steam generator that captures heat from the combusted anode off-gas; and a steam bottoming cycle.

The SOFC unit ancillary components consist of cathode air blowers, cathode heat exchangers that recuperatively heat the cathode air up to the fuel cell inlet temperature, cathode advanced hot gas recycle blowers, anode heat exchangers that recuperatively heat the anode gas up to the fuel cell inlet temperature, and anode gas advanced hot gas recycle blowers.

The heat recovery steam generator produces low-pressure and high-pressure process steam, and high-pressure power steam for the subcritical steam bottoming cycle. The cooling water system uses a mechanical draft, wet cooling tower arrangement.

In Pathway 2, in which pressurized SOFC operation is used, the cathode air is compressed to the pressurized fuel gas inlet pressure, and no cathode gas recycle is used. The cathode off-gas is expanded to atmospheric pressure to generate power to drive the cathode air compressor. Anode gas recycle is accomplished using a syngas-driven jet pump in this pressurized case.

2.4.8 SOFC CO_2 Capture Technology

The anode off-gas is combusted using 99.5 percent oxygen in an advanced oxy-combustor with excess oxygen limited to 1 mole percent. The combusted anode gas consists of CO_2, water vapor, excess oxygen, and minor traces of contaminants (sulfur species, and NO_x). This combustion gas is dehydrated and compressed to the sequestration pressure of 2,200 psig. In its dry state it will contain 2 to 3 mole percent oxygen. It is assumed that this is acceptable, although it far exceeds the currently adopted criteria for CO_2 sequestration gas.

2.5 Environmental Requirements

The emissions estimated to result from the NGFC plant are far lower than any current environmental regulations for fossil fuel power plants. It is assumed that plant permitting requirements will be based on these capabilities.

2.5.1 NGFC Emission Perspective

The NGFC plant emissions are very limited because the total sulfur content in the natural gas must be controlled to less than 100 ppbv to protect the fuel cell materials, the oxy-combustor is a low NO_x producing combustor, and all of the remaining contaminant species are sequestered with the CO_2. The plant has nearly 100 percent removal of all environmental contaminants, including CO_2. Water usage is also estimated to be extremely low in the NGFC plants. The pipeline natural gas is assumed to contain no particulate matter or trace elements, resulting in no control requirements being needed other than natural gas desulfurization.

2.5.2 CO_2 Product Specification

Exhibit 2-5 gives the pipeline specification used for this study. [1] This specification assumes carbon steel for the pipeline material. The potential to co-sequester other contaminants with CO_2 does not occur, and the oxy-combustor off-gas will contain only very small quantities of SO_2, NO_x, and CO.

Note that in this evaluation, the dried CO_2 sequestration stream will contain 2–3 mole percent oxygen. It is assumed that this will be acceptable for the CO_2 piping system and the geological storage formation.

Exhibit 2-5 CO_2 pipeline specification

Compression Pressure (psia)	2,215
CO_2	not limited
Water	dehydration (0.015 vol%)
N_2	not limited
O_2	<100 ppmv
Ar	not limited
NH_3	not limited
CO	not limited
Hydrocarbons	<5 vol%
H_2S	<1.3 vol%
CH_4	<0.8 vol%
H_2	Uncertain
SO_2	<3 vol%
NO_x	Uncertain

2.6 Economic Analysis

Capital and production cost estimates follow the economic basis applied in the Bituminous Baseline Report. The Bituminous Baseline Report provides factored estimates developed for each plant section for conventional fossil fuel plants, and this study scales those costs for comparable plant sections that appear in the NGFC plants. Costs were factored using operating variables and scaling exponents appropriate for each system account. Costs for unique equipment in the NGFC plants were estimated using available generalized cost correlations, or using cost estimates for comparable equipment reported in other power plant studies. In the case of the SOFC stack components, the estimated capital cost were based on a current NETL technology development cost goal and SOFC vendor projections.

2.6.1 Plant Maturity

The pathway plants simulated include technologies at different commercial maturity levels, and the NGFC plants contain some advanced, immature technologies. The SOFC and oxy-combustion technologies are immature and unproven at commercial scale in power generation applications.

The developing SOFC technology performance and cost has been estimated through scaling to commercial levels by the SOFC developers. While commercial pre-combustion CO_2 removal technology could be applied in place of the oxy-combustion based CO_2 removal, the advantages

of oxy-combustion approach over pre-combustion CO_2 removal are so large that the oxy-combustion technology merits development support.

The current-dollar, first-year COE was calculated for each case using economic parameters for high-risk technologies resulting in a capital charge factor of 0.1773. The capital component of the COE was calculated using the plant Total Overnight Cost (TOC).

2.6.2 Contingency

Both the project contingency and process contingency costs represent costs that are expected to be spent in the development and execution of the project that are not yet fully reflected in the design. It is industry practice to include project contingency in the Total Plant Cost (TPC) to cover project uncertainty and the cost of any additional equipment that would result during detailed design. Likewise, the estimates include process contingency to cover the cost of any additional equipment that would be required as a result of continued technology development.

The project and process contingencies applied were taken from the Bituminous Baseline Report for comparable equipment items. The contingencies applied are listed in Exhibit 2-6.

2.6.3 Operating Labor

Operating labor cost was determined based on of the number of operators required for each specific case. The average base labor rate used to determine annual cost is $34.65/h. The associated labor burden is estimated at 30 percent of the base labor rate. Seven operators per shift are assumed in all cases except for Pathway 3, where there is no ATR system to operate and it is assumed that six operators are needed.

Exhibit 2-6 Project and process contingencies

Equipment Component	Project Contingency	Process Contingency
Natural Gas Desulfurization	0	0
Auto-thermal Reformer & Accessories		
ATR & Syngas Cooler	0	15
ASU & Oxidant Compressor	0	10
CO_2 Drying & Compression	0	20
SOFC Power Island		
NG expander/Syngas expander/Oxy-combustor expander	15	15
SOFC Reactor	0[1]	0[1]
Cathode Air Blower/Compressor	15	15
Cathode Recycle Gas Blower	15	15
Cathode Heat Exchanger	15	15
Anode Heat Exchanger	15	15
Anode Recycle Gas Blower/ Jet Pump	15	15
Oxy-Combustor	0	0
Feedwater & Misc. BOP Systems	0	23
HRSG, Ducting & Stack	0	10
Steam Power System	0	14
Cooling Water System	0	20
Accessory Electric Plant	0	19
Instrumentation & Control	0	17
Improvement to Site	0	30
Buildings & Structures	0	16

1 – No contingency is applied because the SOFC reactor cost is based on an NETL development goal

2.6.4 First-Year, Current-Dollar Cost of Electricity

The figure of merit, the first-year COE without transport and storage (T&S), was determined as specified in the NETL Quality Guidelines for Energy System Studies using a simplified model derived from the NETL Power Systems Financial Model. [9] The cost premises applied in the Bituminous Baseline Report are applied here. The NGFC plants are treated as high-risk plants to generate COE values.

The first year cost of natural gas used in this study is $6.21/MMkJ ($6.55/MMBtu) (2015 cost of natural gas in 2007 dollars). This cost was determined in the Bituminous Baseline Report.

2.6.5 Capital Costs

Following the basis in the Bituminous Baseline Report, with costs in June 2007-dollars, the capital costs at the TOC level include equipment, materials, labor, indirect construction costs, engineering, owner's costs, and contingencies. Where applicable, the cost of major plant sections in the study case plants were based on a scaled estimate from the Bituminous Baseline Report, applying the general cost-scaling equation

$$C = N * (C_{ref} / N_{ref}) * [(F / N) / (F_{ref} / N_{ref})]^S$$

Where Cost is the cost of the study case plant section,

N is the number of parallel sections in the study case plant,

C_{ref} is the cost of the reference plant section,

N_{ref} is the number of parallel sections in the reference plant,

F is the scaling capacity for the study case plant section,

F_{ref} is the scaling capacity for the reference plant section, and

S is the scaling factor characteristic of the plant section equipment (a fraction usually between 0.5 and 0.8).

In addition:

- The estimates represent nth-of-a-kind offerings for everything except the natural gas reforming system, the natural gas desulfurization system, the CO_2 compression system, and oxy-combustor system, which are considered initial commercial offerings (i.e., first of a kind).
- The estimates represent a complete power plant facility, with the exception of the exclusions listed below.
- The estimate boundary limit is defined as the total plant facility within the "fence line," and includes the water supply system, and CO_2 transport storage and monitoring. Electrical output "within the fence line" terminates at the high voltage side of the main power transformers.
- Costs are grouped according to a process/system oriented code of accounts; all reasonably allocable components of a system or process are included in the specific system account in contrast to a facility, area, or commodity account structure.

CO_2 T&S costs are not included in the study.

2.6.6 SOFC Power Island Capital Cost

The rationale used to estimate the cost of the SOFC power island for both atmospheric-pressure SOFC and pressurized SOFC applications is described here. The cost basis for the key SOFC Unit (the cell Blocks arranged as Stack Modules, their Enclosures, and the DC-AC Inverters) is identified. The major basis for the estimates made here are a DOE 2010 SOFC cost goal, and cost estimates generated by Fuel Cell Energy Inc. (FCE). [10] [11]

Exhibit 2-7 illustrates the NGFC power island configuration using FCE terminology. The NGFC power island consists of an array of factory assembled SOFC Sections, a syngas expander, an oxy-combustor, and steam bottoming components that are separately shipped and installed with the SOFC Sections at the plant site. Each SOFC Section consists of an array of Stack Modules, with the anode and cathode blowers and heat exchangers being factory assembled and shipped as complete, integrated units to the power plant. Each SOFC Unit contains, using FCE terminology:

- SOFC "Blocks" arranged as Stack Modules,
- an Enclosure for each Stack Module,

- a DC-AC Inverter for each Stack Module.

A basic "cell" has an area of 550 cm^2, and a Block contains 96 cells, or 52,800 cm^2 of active cell area. Each Stack Module holds 64 Blocks, and each Section holds 42 Stack Modules.

The DOE 2010 SOFC cost goal for the factory–assembled, atmospheric-pressure SOFC Blocks and Enclosures is 175 $ per kW of plant net power, in June 2007 dollars. This cost is interpreted as the factory-assembled cost, not including transportation to the site, and labor and materials for the site foundation, and for placing the equipment at the site. The other Section components (blowers and heat exchangers) are separately estimated as factory-installed items. The other power island components (syngas expander, oxy-combustor, and steam bottoming components) are estimated as separately shipped components installed at the plant site.

It is assumed that the atmospheric-pressure SOFC Unit will have a power density of 400 mW/cm^2 since the temperature, fuel utilization, and syngas composition will vary only over a limited range generally selected for high levels of performance. The SOFC Blocks and Enclosure cost must be converted to units of dollars per kW of SOFC power, rather than dollars per kW of net plant power, in order to be able to use the cost for general plant cost estimation. The ratio of the net plant power to the SOFC power ranges from approximately 0.94 to 1.0 for prior plant simulations performed, and a value of 0.945 from a base plant configuration is applied here to produce a cost for the integrated Blocks and Enclosures of 165 $/SOFC kW, in June 2007 dollars.

From FCE estimates, the separate Enclosures cost is about 25 $/SOFC kW, and thus the integrated Blocks cost about 140 $/SOFC kW. With the power density being 400 mW/cm^2, and assuming an Inverter efficiency of 97 percent, the integrated Blocks cost per cm^2 of active surface area is 140/1,000 * 400/1,000 * 0.97 = 0.054 $\$/cm^2$ active surface area. This value is used to estimate the pressurized SOFC Unit cost.

The Inverter cost is estimated from FCE information as 82 $/SOFC kW using NIST SiC inverter technology. This advanced technology is considerably cheaper than the more conventional Satcon technology.

The total cost of the atmospheric-pressure, integrated SOFC Units (Blocks, Enclosures, Inverters) is 165 + 82 = 247 $/SOFC kW. To this is also added the rough estimate for the cost of transport and placement of the Sections (12 $/SOFC kW) and the cost for the Section foundations at the site (37 $/SOFC kW), for a total installed cost of 296 $/kW of SOFC AC generation.

A similar configuration is assumed to apply for the pressurized SOFC Unit, where the Enclosures now require pressure capability to a 300 psia design pressure. It is assumed that the pressurized cells will have a fixed power density of 500 mW/cm^2, increased from 400 mW/cm^2 by the enhanced performance resulting from pressurization.

The integrated Block cost will then be 0.054 / (500 * 0.97) * $1x10^6$ = 111 $/SOFC kW, based on the atmospheric Blocks cost of 0.054 $\$/cm^2$. The Enclosure cost is estimated to be a factor of 10 higher than the atmospheric-pressure enclosure cost to house the Modules having dimensions of roughly 10-ft width by 15-ft length by 10-ft height. This makes the Enclosure cost 25 * 400/500 * 10 = 200 $/SOFC kW.

With the Inverter cost being the same as in the atmospheric-pressure application, the total cost of the pressurized, integrated SOFC Unit (Blocks, Enclosures, Inverters) is 111 + 200 + 82 = 393 $/SOFC kW. With transportation, placement, and foundations, the total cost is 442 $/kW of SOFC AC generation.

Exhibit 2-7 SOFC power island configuration showing section components

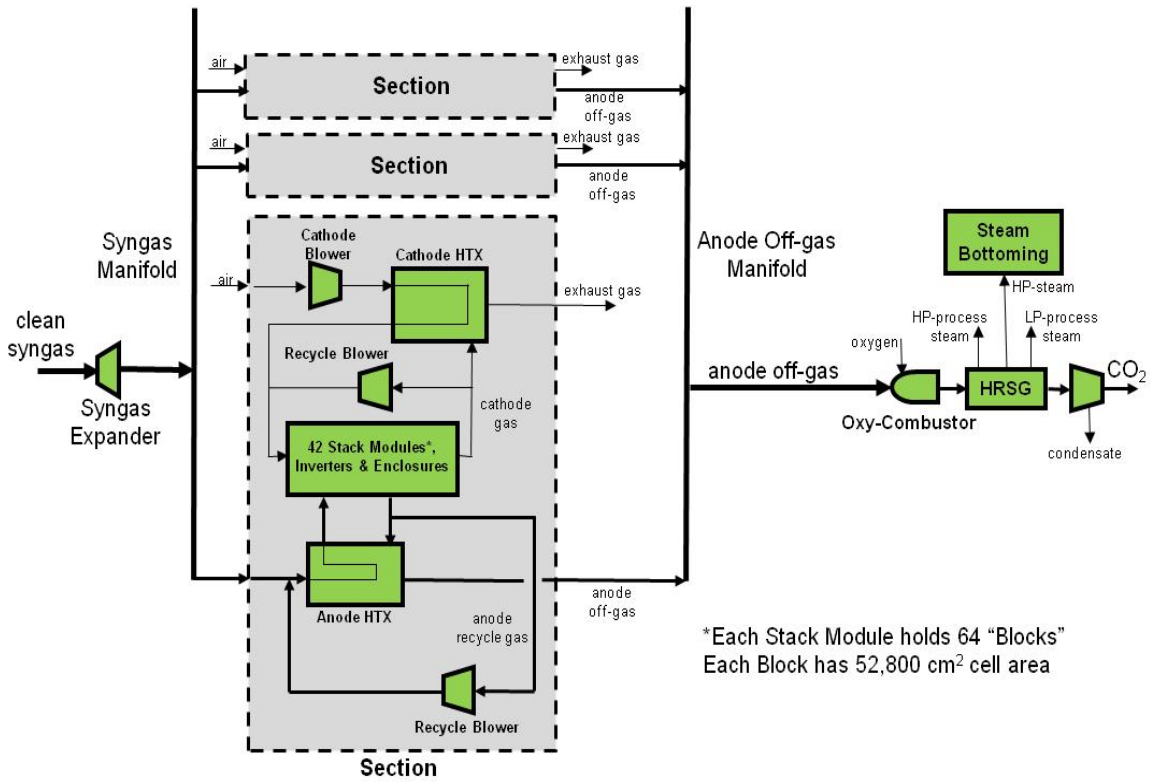

2.6.7 Production Costs and Expenses

The production, or operations and maintenance (O&M), costs described in this section pertain to charges associated with operating and maintaining the power plants. These are estimated directly from the procedures described in the Bituminous Baseline Report. Exhibit 2-8 lists the catalyst and chemicals initial fill and consumption rate, and price bases applied in the evaluation.

Exhibit 2-8 Catalyst and chemicals consumption and cost basis

Chemical/Catalyst	Initial Fill Scaling Factor	Use Rate Scaling Factor	Price Assumption	Source
MU & WT chemicals	NA	Raw water consumption	0.17 $/lb	NETL [1]
ATR catalyst	Syngas rate	Syngas rate	499 $/m^3	Engineering Estimate
TDA NG sulfur sorbent	Sulfur capture rate	Sulfur capture rate	1.5 $/lb	Vendor data

Another significant production cost is associated with cell performance degradation. Test data indicate that the cell performance degrades at less than 1 percent per 1,000 hours and levels as low as 0.05 percent per 1,000 hours can be considered. [12] The SOFC cells will operate with constant cell voltage and with decreasing cell current, resulting in degraded plant power generation with time. Spare cell capacity in the form of Blocks and Enclosures must be incorporated into the SOFC system design to be "switched on" at regular periods (1,000-hour intervals assumed) to increase the operating cell surface. This will maintain a near-constant plant power output from the SOFC cells to avoid total power plant performance degradation.

It is assumed in this evaluation that spare SOFC cell surface (Blocks and Enclosures) will be provided at a cost of 165 $/SOFC kW based on the cost considerations in Section 2.6.6, and with the spare surface based on the cell degradation rate and the selected cell replacement period. The entire cell surface would be replaced (the Blocks only) at a cost of 140 $/SOFC kW, with an assumed 10 percent discount rate after the cell has degraded the selected extent.

Exhibit 2-9 shows an illustration of the impact of the cell degradation rate and the spare cell surface initially installed in the plant on the plant first-year COE for plants having cell degradation rates of 1.5 percent per 1000 hours and 0.2 percent per 1000 hours. If too little spare cell surface is installed the COE will be high due to the need to frequently replace the stacks. Increased spare cell surface installation leads to a relatively flat COE region where the COE is little influenced by the amount of spare surface installed and the stack replacement period can be selected for best plant maintenance schedule. An optimum spare surface installed exists and this is applied in the pathway study. For 1.5 percent per 1000 hour degradation, the optimum spare surface is 58.4 percent with 5.5 year stack replacement time. For 0.2 percent per 1000 hour degradation, the optimum spare surface is 17 to 20 percent with 11 to 13 year stack replacement time.

Exhibit 2-9 Impact of cell degradation and cell stack replacement period

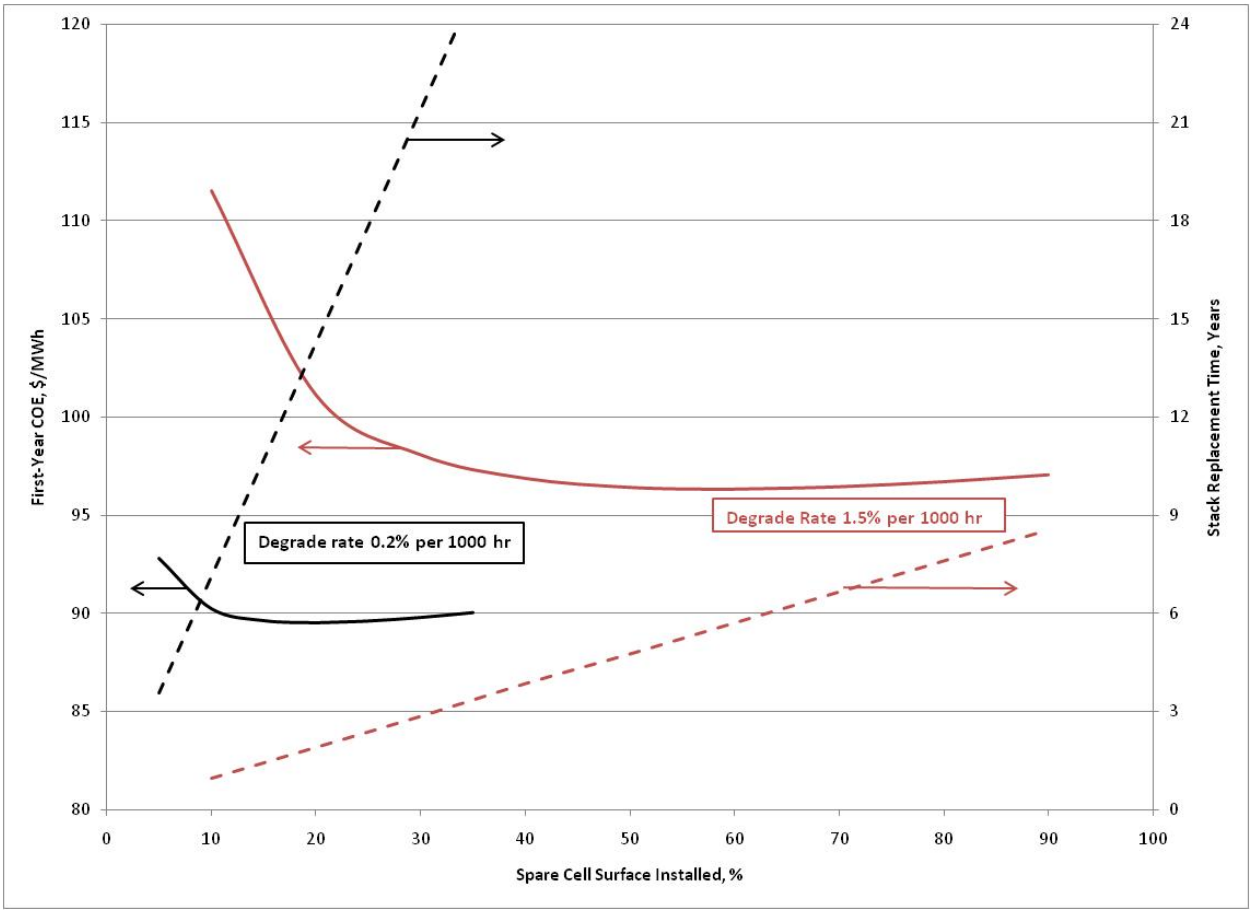

2.6.8 Owner's Costs

The owner's costs to be included in the TOC estimate were estimated following the procedures described in the Bituminous Baseline Report.

2.7 Raw Water Consumption

A water balance was performed for each case on the major water consumers in the process. The total water demand for each subsystem was determined and internal recycle water available from various sources like boiler feedwater blowdown and condensate from CO_2 gas compression was applied to offset the water demand. The difference between demand and recycle is raw water withdrawal. Raw water withdrawal is the water removed from the ground or diverted from a surface-water source for use in the plant. Raw water consumption is also accounted for as the portion of the raw water withdrawn that is evaporated, transpired, incorporated into products or otherwise not returned to the water source it was withdrawn from.

Raw water makeup was assumed to be provided 50 percent by a publicly owned treatment works (POTW) and 50 percent from groundwater. Raw water withdrawal is defined as the water metered from a raw water source and used in the plant processes for any and all purposes, such

as cooling tower makeup, or boiler feedwater makeup. The difference between withdrawal and process water returned to the source is consumption. Consumption represents the net impact of the plant on the water source.

Boiler feedwater blowdown was assumed to be treated and recycled to the cooling tower. The cooling tower blowdown was assumed to be treated and 90 percent returned to the water source with the balance sent for evaporation.

The largest consumer of raw water in all cases is cooling tower makeup. It was assumed that all cases utilized a mechanical draft, evaporative cooling tower, and all process blowdown streams were assumed to be treated and recycled to the cooling tower. A cooling water temperature of 16°C (60°F) with an approach of 5°C (8.5°F) is used. The cooling water range was assumed to be 11°C (20°F). The cooling tower makeup rate was determined using the following [13]:

- Evaporative losses of 0.8 percent of the circulating water flow rate per 10°F of range
- Drift losses of 0.001 percent of the circulating water flow rate
- Blowdown losses were calculated as follows:
    - Blowdown Losses = Evaporative Losses / (Cycles of Concentration - 1)

where cycles of concentration is a measure of water quality, and a mid-range value of 4 was chosen for this study.

The water balances presented in subsequent sections include the water demand of the major water consumers within the process, the amount of process water returned to the source, and the raw water consumption, by difference.

3 NGFC Plant Major Process Areas

The NGFC plant consists of several integrated process areas, the primary ones being the air separation unit, the reformer area, the power island, and the CO_2 dehydration and compression area. Descriptions of these areas and their selected technologies are presented in this report section. Additional case-specific performance information is presented in the relevant pathway sections.

3.1 Air Separation Unit

The air separation unit (conventional cryogenic ASU) generates oxidant for use in two sections of the NGFC plant: the natural gas auto-thermal reformer, and the anode off-gas oxy-combustor. In this study, the ASU main air compressor discharge pressure was set at 0.5 MPa (79 psia), providing oxygen product at sufficient pressure, 0.16 MPa (23 psia), to operate the oxy-combustor for the atm-pressure SOFC applications. The ASU is designed to generate 99.5 percent pure oxygen for NGFC applications to maintain the sequestered CO_2 stream with low nitrogen and argon content. There is no opportunity for ASU air-side integration in the NGFC plant like there are in IGCC plants, and there is no need or benefit from syngas nitrogen dilution in the NGFC. In this study, the ASU nitrogen product is used only for inert gas needs, with the remainder vented. The plant is designed with a single production train. The air compressor providing air to the process is powered by an electric motor.

The ASU simulation applied for this evaluation is greatly simplified, and the ASU performance is extrapolated from reported plant performance data. The Bituminous Baseline report [1] provides a detailed description of the cryogenic ASU process configuration and functions.

3.2 Natural Gas Reforming Area

Various types of natural gas reformers are commercially available to generate a syngas suitable for the NGFC power generation application. The major types include the steam-methane reformers, the partial oxidation reformer, and the ATR. Of these, the ATR is expected to be the cheapest and most reliable reformer available for the simple generation of a hydrogen, carbon monoxide syngas [7] [8] and is selected for use in this evaluation.

The ATR was first developed by Halder Topsoe in the late 1950s. It consists of a refractory-lined pressure vessel that contains two reaction zones, a combustion zone followed by a catalytic reforming zone. Steam is mixed with pressurized natural gas in proportions that prevent soot formation within the high-temperature combustion zone. This mixture is preheated and fed to a burner nozzle fired with a pressurized, preheated oxygen stream. The burner nozzle is directed into the ATR combustion zone where partial oxidation of the fuel, heating, and recirculation mixing occurs, with temperature reaching up to 1900°C. Soot is prevented from forming in this zone if sufficient steam is provided.

The partially oxidized mixture then flows uniformly through internal, refractory distribution devices, into the catalytic reaction zone where methane is reformed and the water gas shift reaction proceeds. A near equilibrium condition is reached in this Ni-based catalyst zone, with exit temperature in the range of 900 to 1100°C. The Ni-based catalyst may be in the form of a packed bed or a honeycomb-supported structure that allows greater space velocity with

acceptable pressure drop. Pressurized operation of the ATR for various synthesis applications is typical at pressures up to 60 atmospheres, but low-pressure operation is also feasible.

Exhibit 3-1 lists the operating conditions selected and the assumptions applied for the ATR in the study cases (Pathways 1 and 2) in this evaluation. In both pathways, 40 percent of the total plant natural gas is reformed. Pathway 1 uses an atmospheric-pressure SOFC application and the ATR is operated at low pressure. The ATR could have been operated at a high pressure, like that used in Pathway 2, with the SOFC fuel gas expanded to the SOFC inlet pressure.

It is assumed that there is no soot formation or carbon loss in the ATR, and equilibrium syngas composition is achieved. The reformer syngas product is mixed with the remaining, 60 percent of the natural gas feed, resulting in a high methane content in the SOFC fuel gas stream that is near the upper limit of what is expected to be currently operable in the SOFC unit.

Exhibit 3-1 Natural gas reformer section operating conditions and assumptions

	Pathway 1	Pathway 2
Natural Gas Reformer		
Technology	ATR	ATR
Number reformers in parallel	1	1
Exit temperature, ºC (ºF)	927 (1700)	982 (1800)
Exit pressure, MPa (psia)	0.14 (20)	3.10 (450)
NG reformed, % of total	40	40
NG preheat temperature, ºC (ºF)	476 (888)	477 (890)
Oxygen-to-NG mass feed ratio	0.45	0.44
Oxygen preheat temperature, ºC (ºF)	177 (350)	177 (350)
Steam-to-NG molar ratio	1.0	1.0
Steam feed temperature, ºC (ºF)	149 (300)	260 (500)
Carbon loss, % of NG carbon	0	0
Raw syngas composition basis	Equilibrium	Equilibrium
SOFC feed gas methane content, mol% (dry)	30.2	32.3
Raw Syngas Cooler		
Technology	Tube-in-shell	Tube-in-shell
Number in parallel	2	1
Outlet temperature, ºC (ºF)	149 (300)	149 (1505)

3.3 SOFC Power Island

The SOFC power island components are shown in the Exhibit 3-2 flow diagram. They consist of a natural gas expander, or a syngas expander that expands the syngas from its high-pressure condition down to the operating pressure of the fuel cell unit, the SOFC fuel cell unit with DC-AC inverters, an anode off-gas oxy-combustor, a heat recovery steam generator that captures heat from the combusted anode off-gas, and a steam bottoming cycle. The SOFC fuel cell unit ancillary components consist of cathode air blowers, cathode heat exchangers that recuperatively heat the cathode air up to the fuel cell inlet temperature, cathode hot gas recycle blowers, and

anode heat exchangers that recuperatively heat the anode gas up to the fuel cell inlet temperature, and anode hot gas recycle blowers. Hot gas blowers capable of operation at the required conditions of the anode and cathode recycle gas streams are currently under development. [14]

The heat recovery steam generator produces low-pressure and high-pressure process steam, and high-pressure power steam for the subcritical steam bottoming cycle. The cooling water system uses a mechanical draft, wet cooling tower arrangement.

In Pathway 2, in which pressurized fuel cell operation is used, the cathode air is compressed to the pressurized fuel gas inlet pressure, and no cathode gas recycle is used. The cathode off-gas is expanded to atmospheric pressure to generate power to drive the cathode gas compressor. Anode gas recycle is accomplished using a syngas-driven jet pump in this pressurized case.

Exhibit 3-2 IGFC power island

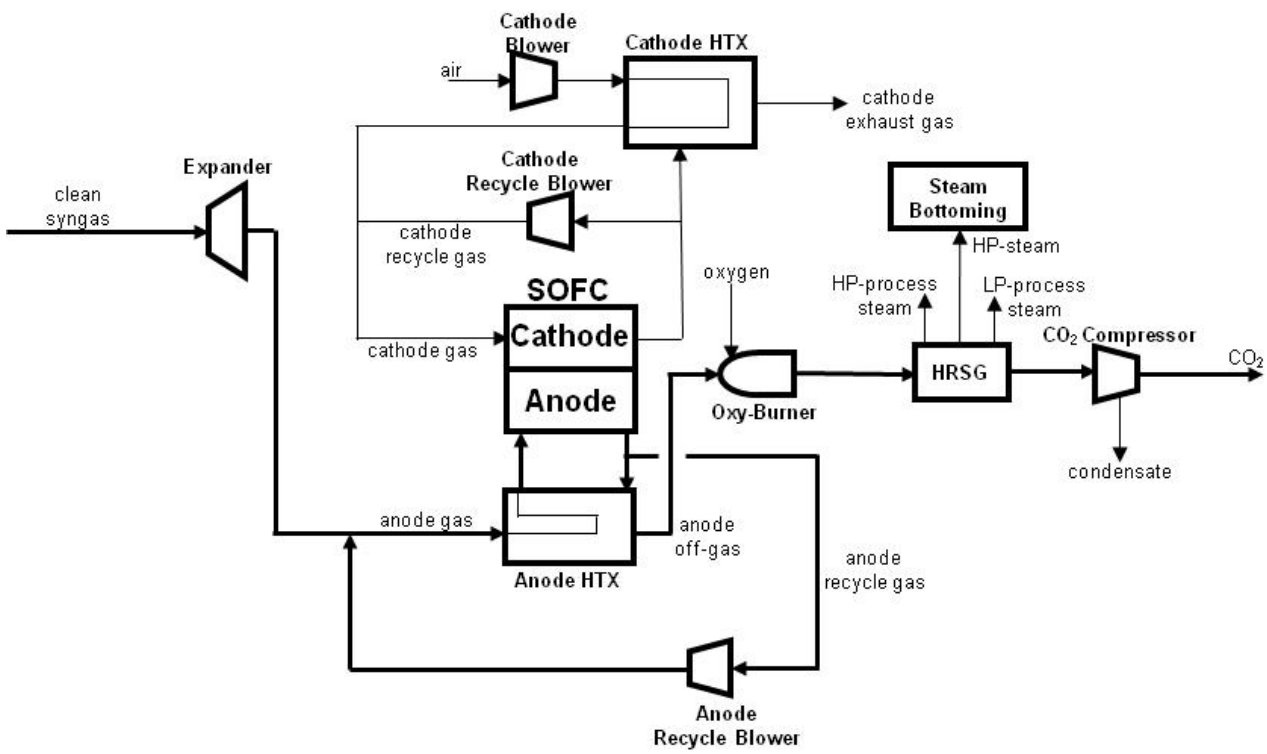

The major assumptions for the atmospheric-pressure SOFC power island are listed in Exhibit 3-3. In all of the study cases, it is assumed that the anode inlet gas to the fuel cell must have a total oxygen-to-carbon atomic ratio of at least 2.0 to avoid carbon deposition in the fuel cell. This constraint is satisfied by maintaining sufficiently high anode gas recycle; with the hot anode gas recycle increasing the water vapor content, and the associated oxygen-to-carbon atomic ratio in the anode inlet gas.

The anode off-gas is combusted using oxygen in an advanced oxy-combustor with excess oxygen limited to 1 mole percent. It is assumed that an anode off-gas oxy-combustor can be developed that can operate stably with 1 mole percent excess oxygen.

Exhibit 3-3 Power island baseline conditions and assumptions

	Pathway 1	Pathway 2
Natural Gas/Syngas Expander		
Outlet pressure, MPa (psia)	0.21 (30)	2.0 (290)
Efficiency, adiabatic %	90	90
Generator efficiency (%)	98.0	98.0
Fuel Cell System		
Cell stack inlet temperature, ºC (ºF)	650 (1202)	650 (1202)
Cell stack outlet temperature, ºC (ºF)	750 (1382)	750 (1382)
Cell stack outlet pressure, MPa (psia)	0.12 (15.6)	2.2 (285)
Fuel single-step utilization, %	80.0	80
Fuel overall utilization, %	90.0	90
Stack anode-side pressure drop, MPa (psi)	0.0014 (0.2)	0.014 (2)
Stack cathode-side pressure drop, MPa (psi)	0.0014 (0.2)	0.014 (2)
Power density, mW/cm^2	400	500
Stack over-potential, mV	140	70
Cell degradation rate (% per 1000 hours)	1.5	0.2
Cell replacement period (% degraded)	20	20
Fuel Cell System Ancillary Components		
Anode gas recycle method	Hot gas fan	Fuel gas jet pump
Anode recycle gas fan efficiency, adiabatic %	80	NA
Anode heat exchanger pressure drop, MPa (psi)	0.0014 (0.2)	0.021 (3)
Cathode gas recycle method	Hot gas fan	None
Cathode recycle gas rate, %	50	0
Cathode recycle gas fan eff., adiabatic %	80	NA
Cathode heat exchanger pressure drop, MPa	0.0014 (0.2)	0.021 (3)
Cathode blower/compressor eff., adiabatic %	90	90
Cathode gas expander efficiency, adiabatic %	NA	90
Rectifier DC-to-AC efficiency, %	97.0	98.0
Recycle blower motor drives eff., %	87.6	87.6
Other electric motor drives efficiency, %	95	95
Transformer efficiency, %	99.65	99.65

Heat Recovery Steam generator and Steam Power Cycle

The Bituminous Baseline report [1] provides a detailed description of the HRSG and steam power cycle process configuration and equipment in typical IGCC and NGCC power plants. The HRSG and steam power cycle for the NGFC cases evaluated in this report are expected to be similar in configuration and operating conditions to the comparable IGCC and NGCC systems. Only simplified simulation of the steam system was conducted in this evaluation, as described in Section 2.

3.4 CO_2 Dehydration and Compression Area

The oxy-combustion off-gas stream, after all heat recovery in completed, is compressed from its delivery pressure to a supercritical condition at 15.3 MPa (2215 psia) using four parallel multiple-stage, intercooled compressors. During compression, the CO_2 stream is dehydrated before each compression stage by water cooling and water knockout, and ultimately to a dew point of -40ºC (-40°F) with a triethylene glycol system. The CO_2 is transported to the plant fence line and is sequestration ready. In its dry state it will contain about two to three mole percent oxygen. It is assumed that this will be acceptable, although it far exceeds the currently adopted criteria for CO_2 sequestration gas.

3.5 Accessory Electric Plant

The accessory electric plant consists of switchgear and control equipment, generator equipment, station service equipment, conduit and cable trays, and wire and cable. It also includes the main power transformer, all required foundations, and standby equipment.

3.6 Instrumentation and Control

An integrated plant-wide DCS is provided. The DCS is a redundant microprocessor-based, functionally distributed control system. The control room houses an array of multiple video monitor (CRT) and keyboard units. The CRT/keyboard units are the primary interface between the generating process and operations personnel. The DCS incorporates plant monitoring and control functions for all the major plant equipment. The DCS is designed to be operational and accessible 99.5 percent of the time it is required (99.5 percent availability). The plant equipment and the DCS are designed for automatic response to load changes from minimum load to 100 percent. Startup and shutdown routines are manually implemented, with operator selection of modular automation routines available. The exception to this, and an important facet of the control system for gasification, is the critical controller system, which is a part of the license package from the gasifier supplier and is a dedicated and distinct hardware segment of the DCS.

This critical controller system is used to control the ATR process. The partial oxidation of the fuel feed and oxygen feed streams to form a syngas product is a stoichiometric, temperature- and pressure-dependent reaction. The critical controller utilizes a redundant microprocessor executing calculations and dynamic controls at 100- to 200-millisecond intervals. The enhanced execution speeds as well as evolved predictive controls allow the critical controller to mitigate process upsets and maintain the reactor operation within a stable set of operating parameters.

4 Pathway 1: Atmospheric-Pressure SOFC Pathway

The first pathway considered is that for the NGFC plant using atmospheric-pressure SOFC technology with external natural gas reforming, where Case 1-1 represents its baseline case. This baseline case is subject to both performance and cost modifications in subsequent Cases 1-2 through 1-7, representative of a pathway development scenario.

4.1 Case 1-1: Baseline Plant Description

Case 1-1 assesses the baseline NGFC plant for atmospheric-pressure SOFC technology. It uses a low-pressure, ATR for external natural gas reforming, and it applies SOFC operating, performance, and cost specifications representing the current status of the developing SOFC technology. The high, cold gas efficiency of the ATR (90 percent), and the high methane content of its product SOFC fuel gas (30 mole percent at dry condition) promotes high plant efficiency and low cost.

With reference to the Exhibit 4-1 block flow diagram and the Exhibit 4-2 stream table, the Case 1-1 baseline plant is described. Natural gas (Stream 1), delivered to the plant at 500 psia, is first preheated, recouping heat from the hot syngas stream. This natural gas stream is expanded to the ATR inlet pressure of 20 psia before it is split into two streams, a 40 percent stream to be reformed (Stream 2), and a 60 percent stream to be mixed with the reformer syngas product.

The 40 percent stream is fed to the ATR mixed with steam (Stream 4) where it is partially combusted with oxidant (Stream 5) and reacts in a catalytic reactor zone to achieve complete reformation (Stream 7). The syngas mass rate issued from the ATR is about 24 percent of the syngas rate generated in a conventional IGCC plant with CCS having the same plant net generating capacity, and a single ATR train is used.

A conventional ASU generates oxidant (99.5 percent pure) for the ATR (Stream 5) as well as for the anode off-gas oxy-combustor (Stream 6). The ASU oxidant capacity is about 54 percent of the oxidant capacity of a conventional IGCC plant with CCS having the same plant net generating capacity as the Case 1-1 plant. A single ASU train is used.

The syngas mixed with the remaining natural gas (Stream 8) comprises the SOFC fuel gas. There are six parallel SOFC sections in the plant, each containing a single cathode heat exchanger, anode heat exchanger, cathode air blower, cathode recycle gas blower, and anode gas recycle blower.

The SOFC fuel gas stream is preheated through the anode heat exchanger and is mixed with recycled anode gas to achieve the anode inlet temperature (Stream 10). Air is boosted in pressure by the cathode air blower (Stream 12), is preheated through the cathode heat exchanger, and is mixed with recycled cathode gas to achieve the cathode inlet temperature (Stream 13). The cathode inlet gas provides the oxygen needed for the SOFC oxidation reactions, and provides cooling of the cells to maintain temperatures at an acceptable distribution. The cell cooling is aided by the reforming of methane throughout the cells, reducing the required flow of cathode air.

The cathode off-gas passes through the cathode heat exchanger and is then vented. The HRSG shown following Stream 14 is not used in Case 1-1. The anode off-gas (Stream 11) is combusted across the oxy-combustor, generating a hot combustion gas (Stream 15) having 1 percent excess

oxygen content. The HRSG raises high-pressure steam for the steam bottoming cycle, 50 psia steam for the ATR, and low-pressure steam for the auxiliary processing needs.

The NGFC steam plant has a capacity of about 50 percent of the steam plant in a conventional IGCC plant with CCS having the same plant net generating capacity. The NGFC steam plant has a capacity of about 71 percent of the steam plant in a conventional NGCC plant with CCS having the same plant net generating capacity. A single train configuration of oxy-combustor, HRSG and steam power system is used in the plant.

The cooled combustion gas is dehydrated and compressed to 2215 psia to generate the plant's CO_2 product for sequestration (Stream 16). The CO_2 sequestration rate is at a capacity of about 42 percent of that of a conventional IGCC plant with CCS having the same plant net generating capacity. The NGFC plant CO_2 sequestration rate is about 90 percent of that of a conventional NGCC plant with CCS having the same plant net generating capacity. Four parallel CO_2 compression trains are used in the Case 1-1 plant.

An analogous Case 1-1 NGFC power plant without carbon capture is also evaluated, again with net capacity fixed at 550 MW. This plant eliminates the oxy-combustor and CO_2 dehydration and compression system, reducing the ASU capacity almost 50 percent. The excess fuel gas in the anode off-gas is combusted with a portion of the exhaust gas issued from the cathode, and heat recovery from this hot gas stream is used for process steam and steam cycle power generation. The natural gas reforming system and the SOFC system remain the same as in the IGFC plant with carbon capture, but operate at a lower natural gas feed rate due to the plant's higher generating efficiency.

Exhibit 4-1 Case 1-1 Baseline plant block flow diagram

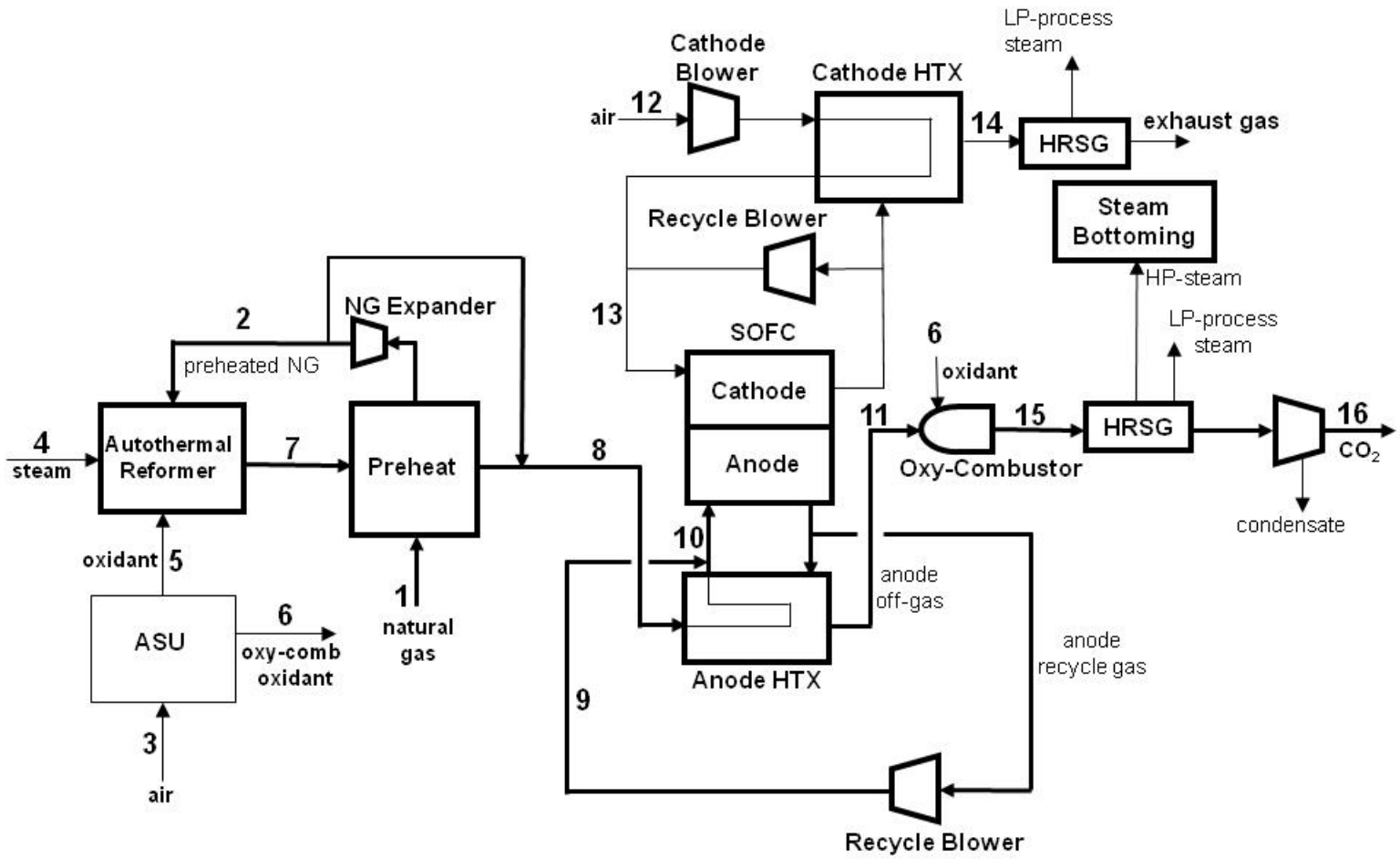

Exhibit 4-2 Case 1-1 Baseline plant stream table

	1	2	3	4	5	6	7	8	9	10	11
V-L Mole Percent											
Ar	0.00	0.00	0.94	0.00	0.31	0.31	0.05	0.03	0.02	0.03	0.02
CH_4	93.10	93.10	0.00	0.00	0.00	0.00	0.01	25.10	0.00	8.52	0.00
CO	0.00	0.00	0.00	0.00	0.00	0.00	19.42	14.18	2.67	6.57	2.67
CO_2	1.00	1.00	0.03	0.00	0.00	0.00	6.20	4.80	27.40	19.74	27.40
H_2	0.00	0.00	0.00	0.00	0.00	0.00	50.94	37.21	7.67	17.69	7.67
H_2O	0.00	0.00	1.04	100.00	0.00	0.00	22.96	16.77	61.76	46.51	61.76
N_2	1.60	1.60	77.22	0.00	0.19	0.19	0.42	0.74	0.48	0.56	0.48
Ethane	3.20	3.20	0.00	0.00	0.00	0.00	0.00	0.86	0.00	0.29	0.00
Propane	0.70	0.70	0.00	0.00	0.00	0.00	0.00	0.19	0.00	0.06	0.00
N-Butane	0.40	0.40	0.00	0.00	0.00	0.00	0.00	0.11	0.00	0.04	0.00
O_2	0.00	0.00	20.77	0.00	99.50	99.50	0.00	0.00	0.00	0.00	0.00
Total	100.00	100.00	100.00	100.00	100.00	100.00	100.00	100.00	100.00	100.00	100.00
V-L Flowrate (kg_{mol}/hr)	3,877	1,551	8,778	1,550	941	834	6,305	8,631	16,822	25,453	13,433
V-L Flowrate (kg/hr)	67,177	26,871	253,270	27,918	30,142	26,710	84,929	125,236	407,597	532,832	325,491
Solids Flowrate (kg/hr)	0	0	0	0	0	0	0	0	0	0	0
Temperature (°C)	15	476	15	149	27	27	927	280	760	650	604
Pressure (MPa, abs)	3.45	0.21	0.10	0.34	0.16	0.16	0.14	0.14	0.11	0.11	0.11
Specific Enthalpy (kJ/kg)[A]	-4,535.5	-3,184.8	-101.7	-13,227.6	1.1	1.1	-5,305.1	-5,941.7	-8,860.8	-7,812.8	-8,879.7
Density (kg/m^3)	26.9	0.6	1.2	1.8	2.0	2.0	0.2	0.4	0.3	0.3	0.3
V-L Molecular Weight	17.328	17.328	28.855	18.015	32.016	32.016	13.471	14.510	21.652	18.858	21.652
V-L Flowrate (lb_{mol}/hr)	8,547	3,419	19,351	3,416	2,076	1,839	13,899	19,028	37,085	56,113	29,615
V-L Flowrate (lb/hr)	148,100	59,240	558,365	61,548	66,452	58,885	187,237	276,097	898,597	1,174,695	717,585
Solids Flowrate (lb/hr)	0	0	0	0	0	0	0	0	0	0	0
Temperature (°F)	59	888	59	300	80	80	1,700	536	1,399	1,202	1,120
Pressure (psia)	500.0	30	14.7	50	23	23	20	19.6	16.2	16.2	15.4
Specific Enthalpy (Btu/lb)[A]	-1,949.9	-1,369.2	-43.7	-5,686.8	0.5	0.5	-2,280.8	-2,554.5	-3,809.5	-3,358.9	-3,817.6
Density (lb/ft^3)	1.679	0.036	0.076	0.113	0.127	0.127	0.012	0.027	0.018	0.017	0.017

Exhibit 4-2 Case 1-1 Baseline plant stream table (continued)

	12	13	14	15	16
V-L Mole Fraction					
Ar	0.94	0.97	1.00	0.04	0.13
CH_4	0.00	0.00	0.00	0.00	0.00
CO	0.00	0.00	0.00	0.00	0.00
CO_2	0.03	0.03	0.03	29.76	95.12
H_2	0.00	0.00	0.00	0.00	0.00
H_2O	1.04	1.07	1.11	68.71	0.00
N_2	77.22	79.71	82.37	0.48	1.54
Ethane	0.00	0.00	0.00	0.00	0.00
Propane	0.00	0.00	0.00	0.00	0.00
N-Butane	0.00	0.00	0.00	0.00	0.00
O_2	20.77	18.22	15.49	1.00	3.20
Total	100.00	100.00	100.00	100.00	100.00
V-L Flowrate (kg_{mol}/hr)	100,182	194,109	93,927	13,573	4,242
V-L Flowrate (kg/hr)	2,890,710	5,581,267	2,690,559	352,200	184,011
Solids Flowrate (kg/hr)	0	0	0	0	0
Temperature (°C)	15	651	209	1,192	38
Pressure (MPa, abs)	0.10	0.11	0.11	0.10	15.27
Specific Enthalpy (kJ/kg)[A]	-101.7	569.9	72.0	-7,591.8	-8,975.8
Density (kg/m^3)	1.2	0.4	0.8	0.1	665.6
V-L Molecular Weight	28.855	28.717	28.568	25.736	43.615
V-L Flowrate (lb_{mol}/hr)	220,863	427,937	207,075	29,923	9,353
V-L Flowrate (lb/hr)	6,372,929	12,304,598	5,931,672	776,469	405,674
Solids Flowrate (lb/hr)	0	0	0	0	0
Temperature (°F)	59	1,203	409	2,178	100
Pressure (psia)	14.69999981	15.8000002	15.4000006	14.8	2215
Specific Enthalpy (Btu/lb)[A]	-43.7	245.0	31.0	-3,263.9	-3,858.9
Density (lb/ft^3)	0.076	0.025	0.049	0.009	41.554

A - Standard Reference State is the ideal vapor heat of formation at 298.15°K

4.2 Case 1-1: Baseline Plant Performance

The Case 1-1 baseline plant power summary is shown in Exhibit 4-4. The dominant power generator in the plant is the SOFC system. The dominant auxiliary loads in the plant are the ASU air compression, the CO_2 compression, and the cathode air and recycle gas blowers. The plant efficiency is 56.3 percent (HHV). The total plant auxiliary power is 9.8 percent of the gross generating capacity of the plant. The exhibit also lists the corresponding power breakdown for Case 1-1 without carbon capture. Without carbon capture the plant efficiency is about three percentage points higher.

Exhibit 4-4 provides more perspective on the stream flows though the plant. All mass flows are indicated in this simplified process schematic relative to the total natural gas feed rate. Pressures are also indicated for some key streams. The mass flows around the ASU and the ATR are small compared to the mass flows around the SOFC system. The cathode-side flows are very large relative to the natural gas flow, being as much as 27 times the natural gas flow. The CO_2 product stream flow is 2.7 times the natural gas flow.

Likewise, Exhibit 4-5 provides perspective on the energy stream flows within the Case 1-1 plant. It shows the major fuel-stream flows relative to the natural gas feed stream fuel-energy content. The diagram also indicates component auxiliary power, temperatures of some key streams, and heat transfer duties of the major plant heat exchanger units.

96 percent of the natural gas feed stream fuel-energy passes to the SOFC system in the anode gas feed stream. Because of the need to operate with 90 percent SOFC total fuel utilization, 11.3 percent of the natural gas feed fuel-energy passes on to the oxy-combustor. The cathode heat exchanger has a particularly high duty at 41 percent of the total natural gas fuel-energy content. Recycling of cathode gas significantly reduces the size and cost of this heat exchanger.

The SOFC voltage is indicated on the diagram as being 0.80 volts. The Nernst potential at the anode outlet condition is 0.85 volts, at the anode inlet condition is 0.94 volts, and the average Nernst is 0.86 volts.

Exhibit 4-6 and Exhibit 4-7 tabulate the high pressure (HP) and low pressure (LP) steam balances for the plant. The oxy-combustor HRSG generates all of the HP- and LP-steam requirements for the plant.

Exhibit 4-8 shows the overall water balance for Case 1-1. Water demand represents the total amount of water required for the plant. Some water is recovered within the plant, and is re-used as internal recycle. The difference between demand and recycle is raw water withdrawal. Raw water withdrawal is defined as the water removed from the ground or diverted from a surface-water source for use in the plant and was assumed to be provided 50 percent by a POTW and 50 percent from groundwater. The difference between water withdrawal and process water discharge is defined as water consumption. Cooling tower makeup is the dominant water demand in the plant. The recovery of condensate from the CO_2 exit stream and the high plant efficiency result in relatively small water consumption.

The carbon balance for the plant is shown in Exhibit 4-9 for Case 1-1. The only carbon input to the plant consists of carbon in the natural gas. About 99.9 percent of the natural gas carbon content is captured in the CO_2 sequestration stream. Air emissions, in Exhibit 4-10, are nearly

zero for Case 1-1 because all of the controlled species remaining in the very clean syngas are co-sequestered with the CO_2 product. The only CO_2 emission is from vented exhaust streams from condensate processing, with the total carbon removal exceeding 99 percent. The NOx emitted by the anode off-gas oxy-combustor will be inherently low and is assumed to meet CO_2 sequestration requirements.

Exhibit 4-3 Case 1-1 Baseline plant power summary (100 percent load)

POWER SUMMARY		
GROSS POWER GENERATED, kWe	**with CCS**	**without CCS**
SOFC Power	522,434	496,832
Natural Gas Expander Power	19,110	18,196
Steam Turbine Power	67,944	63,264
TOTAL POWER, kWe	609,488	578,291
AUXILIARY LOAD SUMMARY, kWe		
ASU Auxiliary power	306	154
ASU air compressor	14,447	7,294
Anode recycle blower	2,148	2,045
CO_2 compressor	22,151	0
BFW pump	1,078	1,004
Condensate pump	72	67
Circulating water pump	1,191	1,109
Cooling tower fans	1,106	452
ST auxiliaries	23	21
Cathode air blower	6,857	6,529
Cathode recycle blower	7,422	7,067
BOP	396	375
Transformer losses	2,292	2,174
TOTAL AUXILIARIES, kWe	59,488	28,291
NET POWER, kWe	550,000	550,000
Net Plant Efficiency, % (HHV)	56.3	59.2
Net Plant Heat Rate, kJ/kWh (Btu/kWh)	6,391 (6,057)	6,085 (5,768)
CONDENSER COOLING DUTY 10^6 kJ/h (10^6 Btu/h)	375 (356)	385 (365)
CONSUMABLES		
Natural Gas Feed, kg/h (lb/h)	67,175 (148,095)	63,961 (141,011)
Thermal Input[1], kWt	976,418	929,713
Raw Water Consumption, m^3/min (gpm)	3.6 (961)	2.9 (768)

Exhibit 4-4 Case 1-1 Baseline plant mass flow diagram

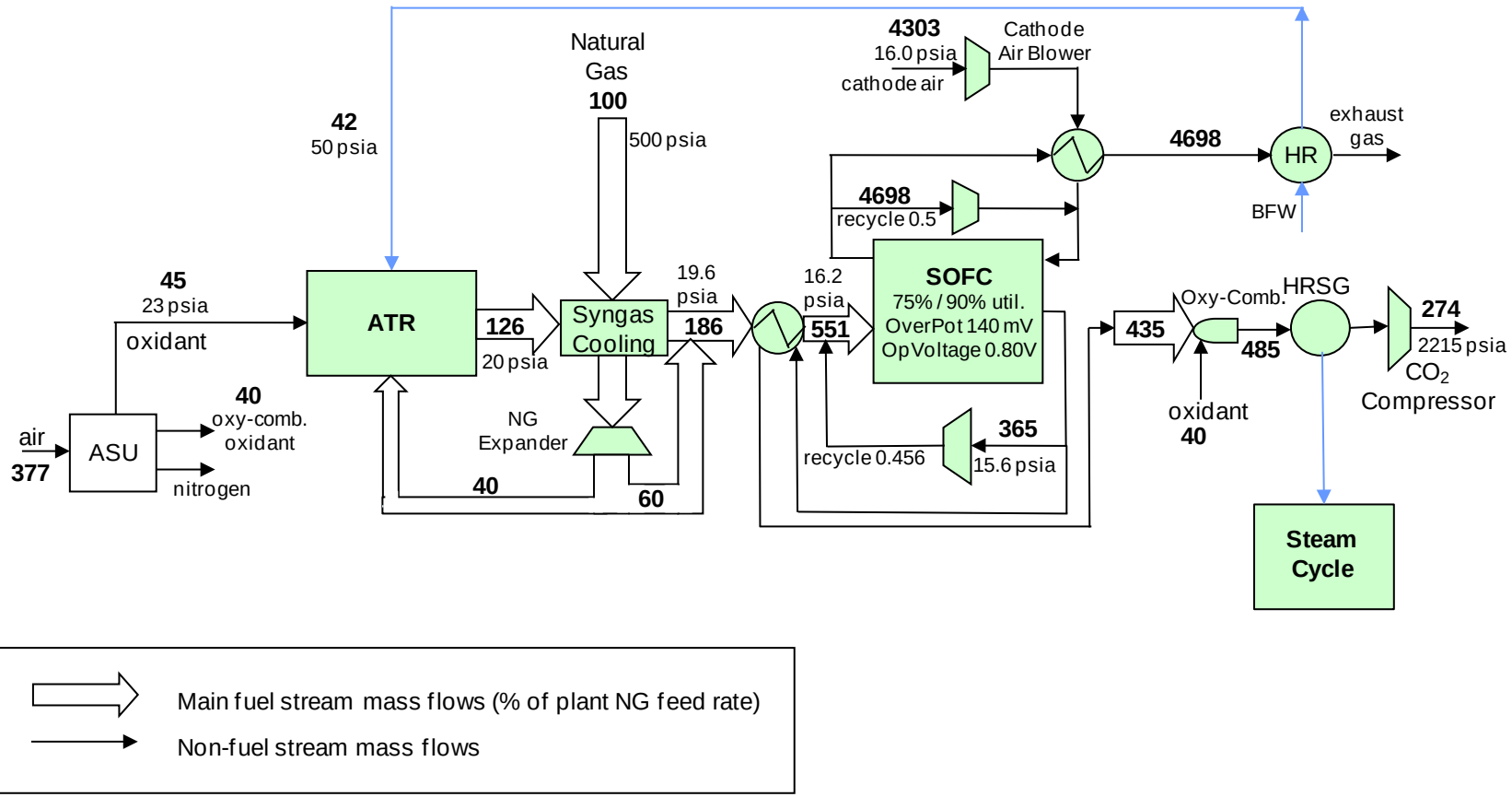

Exhibit 4-5 Case 1-1 Baseline plant energy flow diagram

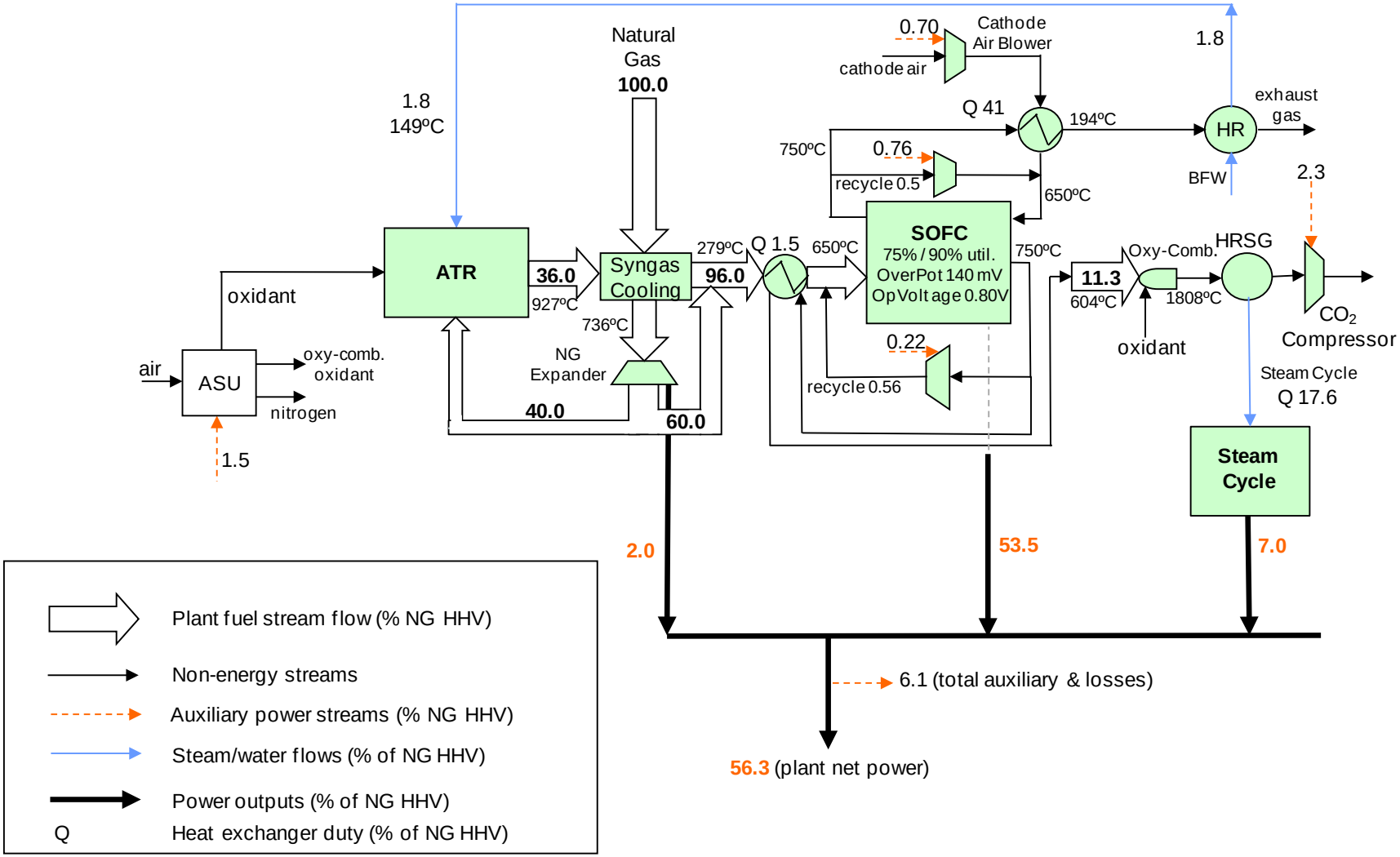

Exhibit 4-6 Case 1-1 Baseline plant high-pressure steam balance

HP Process Steam Use, kg/hr (lb/hr)		HP Process Steam Generation, kg/hr (lb/hr)	
Reformer feed	27,917 (61,546)	**Oxy-combustor heat**	27,917 (61,546)
Total	27,917 (61,546)	**Total**	27,917 (61,546)
HP Power-Steam generation, GJ/hr (MMBtu/hr)			
Oxy-combustor HRSG	620 (588)		
Total	620 (588)		

Exhibit 4-7 Case 1-1 Baseline plant low-pressure steam balance

LP Process Steam Use, GJ/hr (MMBtu/hr)		LP Process Steam Generation, GJ/hr (MMBtu/hr)	
ASU	22 (21)	**Oxy-combustor HRSG**	22 (21)
Total	22 (21)	**Total**	22 (21)

Exhibit 4-8 Case 1-1 Baseline plant water balance

	m^3/min (gpm)
Water Demand	**8.1 (2,146)**
Condenser Makeup *Reformer Steam* *BFW Makeup*	0.53 (140) *0.47 (123)* *0.06 (17)*
Cooling Tower Makeup	7.6 (2,006)
Water Recovery for Reuse	**2.8 (740)**
CO_2 Dehydration	2.8 (740)
Process Discharge Water	**2.0 (518)**
Cooling Tower Water Blowdown	1.7 (451)
CO_2 Dehydration	0.3 (67)
Raw Water Consumed	**3.6 (961)**

Exhibit 4-9 Case 1-1 Baseline plant carbon balance

Carbon In, kg/hr (lb/hr)		Carbon Out, kg/hr (lb/hr)	
Natural Gas	48,519 (106,966)	**Exhaust Gas**	47 (103)
		CO_2 Product	48,472 (106,863)
Total	48,519 (106,966)	**Total**	48,519 (106,966)

Exhibit 4-10 Case 1-1 Baseline plant air emissions

	kg/GJ (lb/10^6 Btu)	Tonne/year (tons/year) 80% capacity factor	kg/MWh (lb/MWh)
NO_X	0 (0)	0 (0)	0 (0)
CO_2	0.05 (0.11)	1,198 (1,320)	0.31 (0.69)

4.3 Case 1-1: Baseline Plant Cost Results

Capital cost estimates for Case 1-1 are broken down in Exhibit 4-11. The SOFC power island, at 569 $/kW, represents 50 percent of the total plant cost. The SOFC units cost 78 percent of the SOFC power island. The cathode heat exchanger at 77 $/kW is also a significant power island cost. The next highest capital costs in the plant are those of the ASU and the ATR systems, with the steam bottoming cycle and its related water systems also being significant. The exhibit also lists the corresponding equipment costs for Case 1-1 without carbon capture. The total plant cost is about fifteen percent lower when carbon capture is eliminated.

The plant operating and maintenance costs, and the first-year COE for Case 1-1 are displayed in Exhibit 4-12 and Exhibit 4-13. These cost results yield an estimate for the avoided CO_2 cost of 42.8 $/ton CO_2, relative to the conventional PC power plant with supercritical steam and without CCS. The first-year COE for Case 1-1 without carbon capture is also displayed. The COE without carbon capture is about eight percent lower than with carbon capture.

The dominant cost factor in the COE is the cost of natural gas. The Exhibit 4-13 COE is based on a natural gas price of 6.55 $/MMBtu. Exhibit 4-14 lists the Case 1-1 COE as a function of the price of natural gas for Case 1-1 with and without carbon capture over the range of 4.0 to 12.0 $/MMBtu. As the price of natural gas triples, the COE rises by 175 percent.

Exhibit 4-11 Case 1-1 Baseline plant capital cost breakdown

	TOTAL PLANT COST with CCS		TOTAL PLANT COST without CCS	
Item/Description	**$ x 1000**	**$/kW**	**$ x 1000**	**$/kW**
NATURAL GAS DESULFURIZATION	1,016	2	974	2
AUTOTHERMAL REACTOR & ACCESSORIES	99,703	181	70,959	129
ATR & Syngas Cooler	32,618	59	31,492	57
ASU & Oxidant Compressor	67,085	122	39,466	72
CO2 DRYING & COMPRESSION	24,800	45	0	0
SOFC POWER ISLAND	312,766	569	297,549	541
NG expander	4,109	7	3,967	7
SOFC Reactor	244,951	445	232,963	424
Cathode Air Blower	2,766	5	2,617	5
Cathode Recycle Gas Blower	6,441	12	6,099	11
Cathode Heat Exchanger	42,281	77	40,212	73
Anode Heat Exchanger	4,042	7	3,844	7
Anode Recycle Gas Blower	516	1	497	1
Oxy-Combustor	7,658	14	7,349	13
FEEDWATER & MISC. BOP SYSTEMS	11,117	20	9,523	17
HRSG, DUCTING & STACK	21,892	40	21,136	38
STEAM POWER SYSTEM	20,009	36	19,018	35
COOLING WATER SYSTEM	17,769	32	9,487	17
ACCESSORY ELECTRIC PLANT	39,600	72	23,519	43
INSTRUMENTATION & CONTROL	27,743	50	27,743	50
IMPROVEMENTS TO SITE	27,993	51	27,993	51
BUILDING & STRUCTURES	25,638	47	25,638	47
TOTAL PLANT COST ($1000)	**630,045**	**1,146**	**533,537**	**970**
Owner's Costs				
Preproduction Costs				
6 Months All Labor	5,062	9	5,062	9
1 Month Maintenance Materials	1,074	2	1,074	2
1 Month Non-fuel Consumables	244	0	223	0
1 Month Waste Disposal	0	0	0	0
25% of 1 Months Fuel Cost at 100% CF	0	0	0	0
2% of TPC	12,601	23	10,671	19
Total	18,980	35	17,029	31
Inventory Capital				
60 day supply of fuel and consumables at 100% CF	416	1	388	1
0.5% of TPC (spare parts)	3,150	6	2,668	5
Total	3,567	6	3,056	6
Initial Cost for Catalyst and Chemicals	921	2	876	2
Land	900	2	900	2
Other Owner's Costs	94,507	172	80,031	146
Financing Costs	17,011	31	14,405	26
Total Overnight Costs (TOC)	**765,931**	**1,393**	**649,833**	**1,182**
Total As-Spent Cost (TASC)	**873,161**	**1,588**	**740,809**	**1,347**

Exhibit 4-12 Case 1-1 Baseline plant O&M cost

OPERATING & MAINTENANCE LABOR					Annual Cost $
Annual Operating Labor Cost	Number of Operators per Shift	7			2,762,159
Maintenance Labor Cost					5,336,492
Administrative & Support Labor					2,024,663
Property Taxes and Insurance					12,440,411
TOTAL FIXED OPERATING COSTS					**22,563,725**
VARIABLE OPERATING COSTS					
Maintenance Material Cost					10,310,102
Stack Replacement Cost					16,593,220
Subtotal					**26,903,323**
Consumables		Consumption	Unit	Initial	
	Initial Fill	/Day	Cost	Cost	
Water (/1000 gallons)	0	1,080	1.08	0	**341,110**
Chemicals					
MU & WT Chem. (lbs)	0	5,069	0.17	0	256,185
Natural Gas Desulfurization Sorbent (lbs)	41,654	1,094	5.00	208,271	1,597,233
ATR Reformer Catalyst (m3)	1,425	1.0	499.00	711,297	142,840
Subtotal Chemicals				**208,271**	**1,853,419**
TOTAL VARIABLE OPERATING COSTS				**919,567**	**29,240,692**
Fuel (MMBtu)			6.55		**152,925,572**

Exhibit 4-13 Case 1-1 Baseline plant cost-of-electricity breakdown

First-year COE Component	$/MWh with CCS	$/MWh without CCS
Capital charge	24.7	20.9
Fixed Operating	5.9	5.4
Variable Operating	7.6	7.3
Fuel	39.7	37.8
T&S	0.0	0.0
Total COE	**77.9**	**71.4**

Exhibit 4-14 Case 1-1 Baseline plant COE sensitivity to NG price

Natural Gas Price ($/MMBtu)	COE ($/MWh) with CCS	COE ($/MWh) without CCS
4.0	62.4	56.7
6.55	77.8	71.4
12.0	110.8	102.9

4.4 Pathway 1 Results

The pathway variations from the Case 1-1 baseline plant include cases where only cost is modified by the pathway step (Cases 1-2, 1-4, 1-5, 1-7) due to reduced cell degradation rate, increased plant availability, and reduced cost of the SOFC stack. Other cases (Case 1-3, 1-6) incorporate pathway steps that impact both the plant performance and cost through reduced cell overpotential, and increased inverter efficiency.

Exhibit 4-15 displays the major results for all of the Pathway 1 steps, all cases having carbon capture. The tabulation shows a climb in the plant efficiency and a reduction in the plant cost, with the greatest benefits resulting from reduced cell degradation rate (Case 1-2), and reduced cell overpotential (Case 1-3). Across the total pathway the COE is reduced by 15.2 $/MWh, and the plant efficiency increases 5.5 percentage-points.

Exhibit 4-15 Pathway 1 results

CASE	Baseline 1-1	1-2	1-3	1-4	1-5	1-6	1-7
Pathway Parameters							
NG Reformer Type	ATR	ATR	ATR	ATR	ATR	ATR	ATR
Fuel Utilization (%)	90	90	90	90	90	90	90
SOFC Pressure (psia)	15.6	15.6	15.6	15.6	15.6	15.6	15.6
Cell Overpotential (mV)	140	140	**70**	70	70	70	70
Plant Capacity Factor (%)	80	80	80	**85**	85	85	**90**
Cell Degradation (%/1000 hr)	1.5	**0.2**	0.2	0.2	0.2	0.2	0.2
Stack Cost ($/kW SOFC)	296	296	296	296	**268**	268	268
Stack Block Cost ($/kW SOFC)	140	140	140	140	**112**	112	112
Inverter Efficiency (%)	97	97	97	97	97	**98**	98
Plant Performance							
Net Efficiency (% HHV)	**56.3**	**56.3**	**61.3**	**61.3**	**61.3**	**61.8**	**61.8**
Cell Voltage (V)	0.80	0.80	0.87	0.87	0.87	0.87	0.87
Anode Inlet Gas O/C Atomic Ratio	2.6	2.6	2.6	2.6	2.6	2.6	2.6
Plant Water Consumption (gpm/MW)	1.8	1.5	1.5	1.5	1.5	1.5	1.5
Plant Cost							
TOC ($/kW)	1,392	1,261	1,191	1,193	1,151	1,147	1,149
First-Year COE ($/MWh)	**77.9**	**71.7**	**67.0**	**65.3**	**64.5**	**64.0**	**62.6**
Capital Charge	24.7	22.4	21.1	19.9	19.2	19.1	18.1
Fixed Operating	5.9	5.6	5.4	5.1	5.0	5.0	4.7
Variable Operating	7.6	4.1	4.0	3.9	3.8	3.8	3.6
Fuel (@ 6.55 $/MMBtu)	39.7	39.7	36.5	36.5	36.5	36.1	36.1
COE w NG price 4 $/MMBtu	**62.4**	**56.2**	**52.8**	**51.1**	**50.3**	**50.0**	**48.5**
COE w NG price 12 $/MMBtu	**110.8**	**104.7**	**97.4**	**95.7**	**94.8**	**94.1**	**92.6**

4.5 Case 1-7: Plant Description

The details of Case 1-7 are presented. The block flow diagram is identical for all of the Pathway 1 steps, and only the stream table is presented for Case 1-7.

With reference to the Exhibit 4-1 block flow diagram and the Exhibit 4-16 stream table, the Case 1-7 plant is described. As in the baseline plant (Case 1-1), natural gas (Stream 1), delivered to the plant at 500 psia, is first preheated, recouping heat from the hot syngas stream. This natural gas stream is expanded to the ATR inlet pressure of 20 psia before it is split into two streams, a 40 percent stream to be reformed (Stream 2), and a 60 percent stream to be mixed with the reformer syngas product.

The 40 percent stream is fed to the ATR mixed with steam (Stream 4) where it is partially combusted with oxidant (Stream 5) and reacts in a catalytic reactor zone to achieve complete reformation (Stream 7). The syngas mass rate issued from the ATR is about 20 percent of the syngas rate generated in a conventional IGCC plant with CCS having the same plant net generating capacity, and a single ATR train is used.

A conventional ASU generates oxidant (99.5 percent pure) for the ATR (Stream 5) as well as for the anode off-gas oxy-combustor (Stream 6). The ASU oxidant capacity is about 30 percent of the oxidant capacity of a conventional IGCC plant with CCS having the same plant net generating capacity as the Case 1-1 plant. A single ASU train is used.

The syngas mixed with the remaining natural gas (Stream 8) comprises the SOFC fuel gas. There are eight parallel SOFC sections in the plant, each containing a single cathode heat exchanger, anode heat exchanger, cathode air blower, cathode recycle gas blower, and anode gas recycle blower.

The SOFC fuel gas stream is preheated through the anode heat exchanger and is mixed with recycled anode gas to achieve the anode inlet temperature (Stream 10). Air is boosted in pressure by the cathode air blower (Stream 12), is preheated through the cathode heat exchanger, and is mixed with recycled cathode gas to achieve the cathode inlet temperature (Stream 13). The cathode inlet gas provides the oxygen needed for the SOFC oxidation reactions, and provides cooling of the cells to maintain temperatures at an acceptable distribution. The cell cooling is aided by the reforming of methane throughout the cells, reducing the required flow of cathode air.

The cathode off-gas passes through the cathode heat exchanger and is then vented. The HRSG shown following Stream 14 is not used in Case 1-7. The anode off-gas (Stream 11) is combusted across the oxy-combustor, generating a hot combustion gas (Stream 15) having 1 percent excess oxygen content. The HRSG raises high-pressure steam for the steam bottoming cycle, 50 psia steam for the ATR, and low-pressure steam for the auxiliary processing needs.

The NGFC steam plant has a capacity of about 26 percent of that of a conventional IGCC plant with CCS having the same plant net generating capacity. The NGFC steam plant has a capacity of about 36 percent of that of a conventional NGCC plant with CCS having the same plant net generating capacity. A single train configuration of oxy-combustor, HRSG and steam power system is used in the plant.

The cooled combustion gas is dehydrated and compressed to 2215 psia to generate the plant's CO_2 product for sequestration (Stream 16). The CO_2 sequestration rate is at a capacity of about

37 percent of that of a conventional IGCC plant with CCS having the same plant net generating capacity. The NGFC plant CO_2 sequestration rate is about 80 percent of that of a conventional NGCC plant with CCS having the same plant net generating capacity. Four parallel CO_2 compression trains are used in the Case 1-7 plant.

An analogous Case 1-7 NGFC power plant without carbon capture is also evaluated, again with net capacity fixed at 550 MW. This plant eliminates the oxy-combustor and CO_2 dehydration and compression system, reducing the ASU capacity almost 50 percent. The excess fuel gas in the anode off-gas is combusted with a portion of the exhaust gas issued from the cathode, and heat recovery from this hot gas stream is used for process steam and steam cycle power generation. The natural gas reforming system and the SOFC system remain the same as in the IGFC plant with carbon capture, but operate at a lower natural gas feed rate due to the plant's higher generating efficiency.

Exhibit 4-16 Case 1-7 Plant stream table

	1	2	3	4	5	6	7	8	9	10	11
V-L Mole Percent											
Ar	0.00	0.00	0.94	0.00	0.31	0.31	0.05	0.03	0.02	0.03	0.02
CH_4	93.10	93.10	0.00	0.00	0.00	0.00	0.01	25.10	0.00	8.51	0.00
CO	0.00	0.00	0.00	0.00	0.00	0.00	19.42	14.18	2.67	6.57	2.67
CO_2	1.00	1.00	0.03	0.00	0.00	0.00	6.20	4.80	27.40	19.74	27.40
H_2	0.00	0.00	0.00	0.00	0.00	0.00	50.94	37.21	7.67	17.69	7.67
H_2O	0.00	0.00	1.04	100.00	0.00	0.00	22.96	16.77	61.76	46.51	61.76
N_2	1.60	1.60	77.22	0.00	0.19	0.19	0.42	0.74	0.48	0.56	0.48
Ethane	3.20	3.20	0.00	0.00	0.00	0.00	0.00	0.86	0.00	0.29	0.00
Propane	0.70	0.70	0.00	0.00	0.00	0.00	0.00	0.19	0.00	0.06	0.00
N-Butane	0.40	0.40	0.00	0.00	0.00	0.00	0.00	0.11	0.00	0.04	0.00
O_2	0.00	0.00	20.77	0.00	99.50	99.50	0.00	0.00	0.00	0.00	0.00
Total	100.00	100.00	100.00	100.00	100.00	100.00	100.00	100.00	100.00	100.00	100.00
V-L Flowrate (kg_{mol}/hr)	3,544	1,418	8,025	1,417	861	763	5,764	7,891	15,380	23,270	12,282
V-L Flowrate (kg/hr)	61,418	24,567	231,558	25,524	27,558	24,420	77,649	114,500	372,654	487,154	297,587
Solids Flowrate (kg/hr)	0	0	0	0	0	0	0	0	0	0	0
Temperature (°C)	15	476	15	149	27	27	927	280	759	650	662
Pressure (MPa, abs)	3.45	0.21	0.10	0.34	0.16	0.16	0.14	0.14	0.11	0.11	0.11
Specific Enthalpy (kJ/kg)[A]	-4,535.5	-3,184.8	-101.7	-13,227.6	1.1	1.1	-5,305.1	-5,941.7	-9,553.8	-8,608.5	-9,728.2
Density (kg/m^3)	26.9	0.6	1.2	1.8	2.0	2.0	0.2	0.4	0.3	0.3	0.3
V-L Molecular Weight	17.328	17.328	28.855	18.015	32.016	32.016	13.471	14.510	24.230	20.934	24.230
V-L Flowrate (lb_{mol}/hr)	7,814	3,126	17,692	3,124	1,898	1,682	12,708	17,396	33,906	51,303	27,076
V-L Flowrate (lb/hr)	135,404	54,162	510,499	56,272	60,755	53,837	171,186	252,429	821,562	1,073,991	656,068
Solids Flowrate (lb/hr)	0	0	0	0	0	0	0	0	0	0	0
Temperature (°F)	59	888	59	300	80	80	1,700	536	1,399	1,202	1,223
Pressure (psia)	500.0	30	14.7	50	23	23	20	19.6	16.2	16.2	15.4
Specific Enthalpy (Btu/lb)[A]	-1,949.9	-1,369.2	-43.7	-5,686.8	0.5	0.5	-2,280.8	-2,554.5	-4,107.4	-3,701.0	-4,182.4
Density (lb/ft^3)	1.679	0.036	0.076	0.113	0.127	0.127	0.012	0.027	0.020	0.019	0.021

Exhibit 4-16 Case 1-7 Plant stream table (continued)

	12	13	14	15	16
V-L Mole Fraction					
Ar	0.94	0.97	1.01	0.04	0.13
CH_4	0.00	0.00	0.00	0.00	0.00
CO	0.00	0.00	0.00	0.00	0.00
CO_2	0.03	0.03	0.03	29.76	95.12
H_2	0.00	0.00	0.00	0.00	0.00
H_2O	1.04	1.08	1.12	68.71	0.00
N_2	77.22	80.00	82.99	0.48	1.54
Ethane	0.00	0.00	0.00	0.00	0.00
Propane	0.00	0.00	0.00	0.00	0.00
N-Butane	0.00	0.00	0.00	0.00	0.00
O_2	20.77	17.92	14.85	1.00	3.20
Total	100.00	100.00	100.00	100.00	100.00
V-L Flowrate (kg_{mol}/hr)	82,263	158,800	76,537	12,409	3,879
V-L Flowrate (kg/hr)	2,373,680	4,564,141	2,190,461	322,007	168,236
Solids Flowrate (kg/hr)	0	0	0	0	0
Temperature (°C)	15	650	204	1,192	38
Pressure (MPa, abs)	0.10	0.11	0.11	0.10	15.27
Specific Enthalpy (kJ/kg)[A]	-101.7	570.3	85.1	-8,990.5	-8,838.0
Density (kg/m^3)	1.2	0.4	0.8	0.2	647.2
V-L Molecular Weight	28.855	28.741	28.620	25.949	43.372
V-L Flowrate (lb_{mol}/hr)	181,360	350,095	168,735	27,358	8,551
V-L Flowrate (lb/hr)	5,233,074	10,062,217	4,829,143	709,904	370,897
Solids Flowrate (lb/hr)	0	0	0	0	0
Temperature (°F)	59	1,201	400	2,178	100
Pressure (psia)	14.69999981	15.8000002	15.4000006	14.8	2215
Specific Enthalpy (Btu/lb)[A]	-43.7	245.2	36.6	-3,865.2	-3,799.7
Density (lb/ft^3)	0.076	0.025	0.048	0.014	40.406

4.6 Case 1-7: Plant Performance

The Case 1-7 plant power summary is shown in Exhibit 4-17. The dominant power generator in the plant is the SOFC system. Because the SOFC total fuel utilization is now 90 percent in Case 1-7, the steam bottoming cycle generates a smaller amount of power than in Case 1-1, about 12 percent of the plant's gross output. The dominant auxiliary loads in the plant remain the ASU air compression, the CO_2 compression, and the cathode air and recycle gas blowers, as in Case 1-1. The plant efficiency is 61.6 percent (HHV). The total plant auxiliary power is 8.8 percent of the gross generating capacity of the plant. The exhibit also lists the corresponding power breakdown for Case 1-7 without carbon capture. Without carbon capture the plant efficiency is about five percentage points higher.

Exhibit 4-18 provides more perspective on the stream flows though the plant. All mass flows are indicated in this simplified process schematic relative to the total natural gas feed rate. Pressures are also indicated for some key streams. The mass flows around the ASU and the ATR are small compared to the mass flows around the SOFC system. The cathode-side flows are very large relative to the natural gas flow, being as much as 39 times the natural gas flow. The CO_2 product stream flow remains 2.7 times the natural gas flow.

Likewise, Exhibit 4-19 provides perspective on the energy stream flows within the Case 1-7 plant. It shows the major fuel-stream flows relative to the natural gas feed stream fuel-energy content. The diagram also indicates component auxiliary power, temperatures of some key streams, and heat transfer duties of the major plant heat exchanger units.

96 percent of the natural gas feed stream fuel-energy passes to the SOFC system in the anode gas feed stream. Because plant operates with 90 percent SOFC total fuel utilization, only 11.3 percent of the natural gas feed fuel-energy passes on to the oxy-combustor. The cathode heat exchanger has a particularly high duty at 41 percent of the total natural gas fuel-energy content. Recycling of cathode gas significantly reduces the size and cost of this heat exchanger.

The SOFC voltage is indicated on the diagram as being 0.87 volts. The Nernst potential at the anode outlet condition is 0.86 volts, at the anode inlet condition is 0.94 volts, and the average Nernst is 0.90 volts.

Exhibit 4-20 and Exhibit 4-21 tabulate the HP- and LP-steam balances for the plant. Again, as in Case 1-1, the oxy-combustor HRSG generates all of the HP- and LP-steam requirements for the plant.

Exhibit 4-22 shows the overall water balances for Case 1-7. Cooling tower makeup is the dominant water demand in the plant. The recovery of condensate from the CO_2 exit stream and the high plant efficiency result in relatively small water consumption, much smaller than in the baseline Case 1-1.

The carbon balance for the plant is shown in Exhibit 4-23 for Case 1-7. The only carbon input to the plant consists of carbon in the natural gas. About 99.9 percent of the natural gas carbon content is captured in the CO_2 sequestration stream.

Air emissions, in Exhibit 4-24, are nearly zero for Case 1-7 because all of the controlled species remaining in the very clean syngas are co-sequestered with the CO_2 product. The only CO_2 emission is from vented exhaust streams from condensate processing, with the total carbon

removal exceeding 99 percent. The NOx emitted by the anode off-gas oxy-combustor will be inherently low and is assumed to meet CO_2 sequestration requirements.

Exhibit 4-17 Case 1-7 Plant power summary (100 percent load)

POWER SUMMARY		
GROSS POWER GENERATED, kWe	**With CCS**	**Without CCS**
SOFC Power	521,592	499,726
Natural Gas Expander Power	17,405	16,675
Steam Turbine Power	61,879	56,286
TOTAL POWER, kWe	600,876	572,687
AUXILIARY LOAD SUMMARY, kWe		
ASU Auxiliary power	279	141
ASU air compressor	13,158	6,684
Anode recycle compressor	1,957	1,875
CO_2 compressor	20,174	0
BFW pump	982	893
Condensate pump	66	60
Circulating water pump	1,085	987
Cooling tower fans	1,008	403
ST auxiliaries	21	19
Cathode air blower	4,618	4,425
Cathode recycle blower	4,879	4,675
BOP	390	372
Transformer losses	2,259	2,153
TOTAL AUXILIARIES, kWe	50,876	22,687
NET POWER, kWe	550,000	550,000
Net Plant Efficiency, % (HHV)	61.8	64.6
Net Plant Heat Rate, kJ/kWh (Btu/kWh)	5,821 (5,517)	5,577 (5286)
CONDENSER COOLING DUTY 10^6 kJ/h (10^6 Btu/h)	342 (324)	342 (324)
CONSUMABLES		
Natural Gas Feed, kg/h (lb/h)	61,180 (134,879)	58,615 (129.224)
Thermal Input[1], kWt	889,283	852,002
Raw Water Consumption, m^3/min (gpm)	3.3 (876)	2.6 (687)

Exhibit 4-18 Case 1-7 Plant mass flow diagram

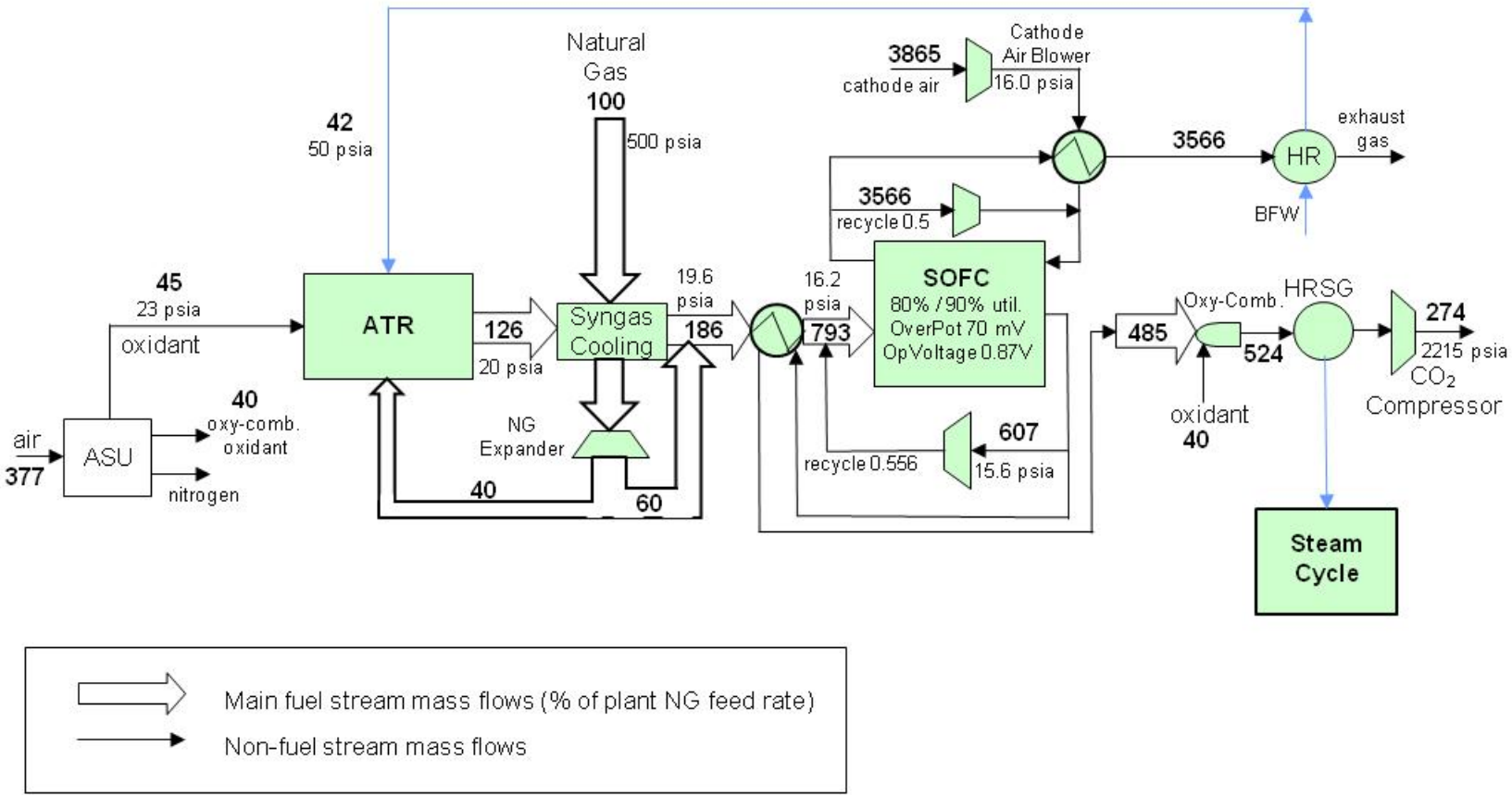

Exhibit 4-19 Case 1-7 Plant energy flow diagram

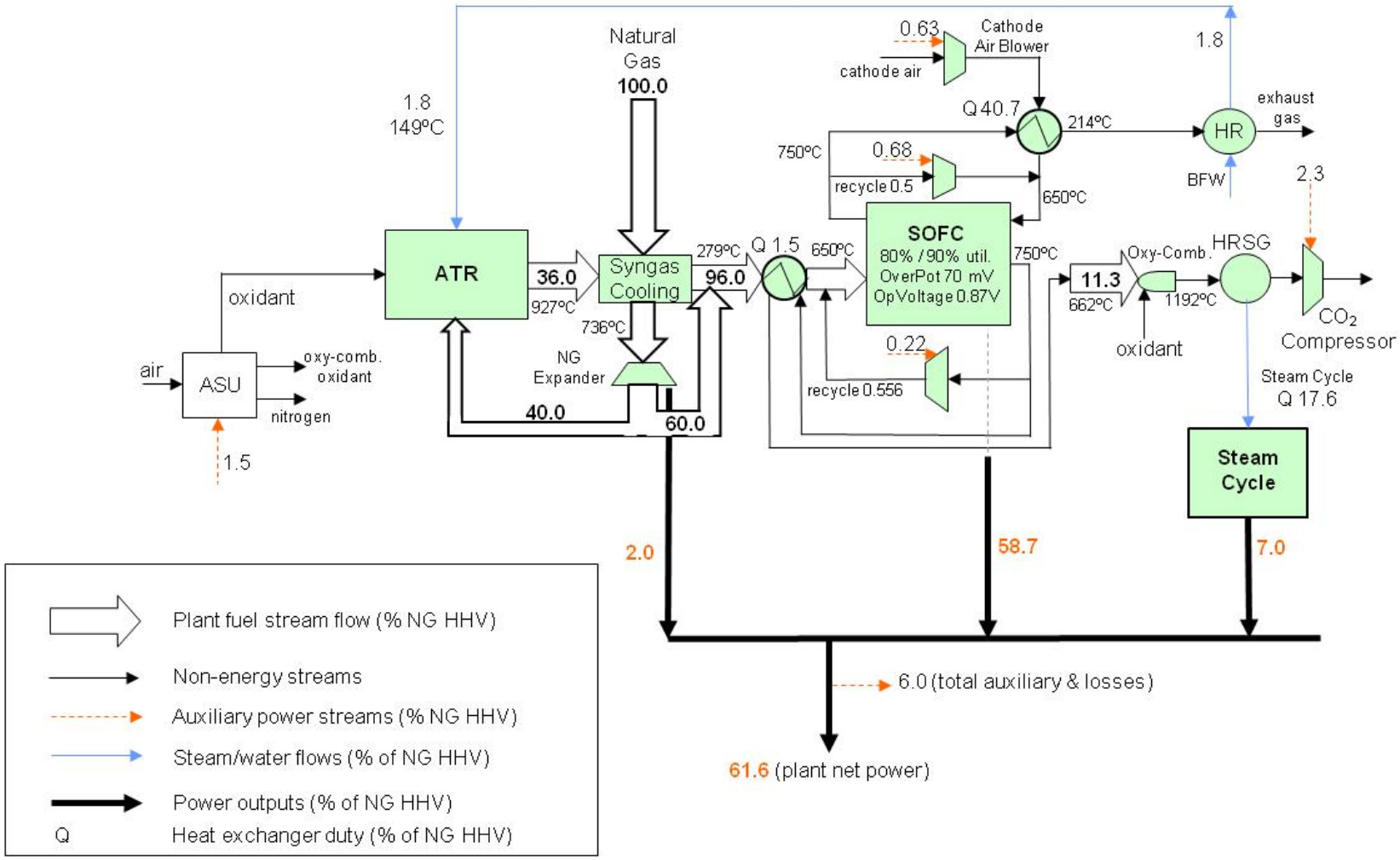

Exhibit 4-20 Case 1-7 Plant high-pressure steam balance

HP Process Steam Use, kg/hr (lb/hr)		HP Process Steam Generation, kg/hr (lb/hr)	
Reformer feed	23,563 (56,272)	**Oxy-combustor heat**	23,563 (56,272)
Total	23,563 (56,272)	**Total**	23,563 (56,272)
HP Power-Steam generation, GJ/hr (MMBtu/hr)			
Oxy-combustor HRSG	567 (537)		
Total	567 (537)		

Exhibit 4-21 Case 1-7 Plant low-pressure steam balance

LP Process Steam Use, GJ/hr (MMBtu/hr)		LP Process Steam Generation, GJ/hr (MMBtu/hr)	
ASU	20 (19)	**Oxy-combustor HRSG**	20 (19)
Total	20 (19)	**Total**	20 (19)

Exhibit 4-22 Case 1-7 Plant water balance

	m^3/min (gpm)
Water Demand	**7.43 (1,962)**
Condenser Makeup *Reformer Steam* *BFW Makeup*	0.49 (128) *0.43 (112)* *0.06 (15)*
Cooling Tower Makeup	6.94 (1,834)
Water Recovery for Reuse	**2.31 (609)**
CO_2 Dehydration	2.31 (609)
Process Discharge Water	**1.79 (474)**
Cooling Tower Water Blowdown	1.56 (413)
CO_2 Dehydration	0.23 (61)
Raw Water Consumed	**3.33 (879)**

Exhibit 4-23 Case 1-7 Plant carbon balance

Carbon In, kg/hr (lb/hr)		Carbon Out, kg/hr (lb/hr)	
Natural Gas	44,361 (97,800)	**Exhaust Gas**	44 (98)
		CO_2 Product	44,317 (97,702)
Total	44,361 (97,800)	**Total**	44,361 (97,800)

Exhibit 4-24 Case 1-7 Plant air emissions

	kg/GJ (lb/10^6 Btu)	Tonne/year (tons/year) 80% capacity factor	kg/MWh (lb/MWh)
NO_X	0 (0)	0 (0)	0 (0)
CO_2	0.05 (0.12)	1,137 (1,254)	0.30 (0.65)

4.7 Case 1-7: Plant Cost Results

Capital cost estimates for Case 1-7 are broken down in Exhibit 4-25. The SOFC power island, at 411 $/kW represents 43 percent of the total plant cost. The SOFC unit costs 74 percent of the SOFC power island. The cathode heat exchanger at 64 $/kW is also a significant power island cost. The next highest capital costs in the plant are those of the ASU and the ATR systems, with the steam bottoming cycle and its related water systems also being significant. The exhibit also lists the corresponding equipment costs for Case 1-7 without carbon capture. The total plant cost is about twenty percent lower when carbon capture is eliminated.

The plant operating and maintenance costs, and the first-year COE for Case 1-7 are displayed in Exhibit 4-26 and Exhibit 4-27. These cost results yield an estimate for the avoided CO_2 cost of 7.9 $/ton CO_2, relative to the conventional PC power plant with supercritical steam and without CCS. This is a great reduction in avoided cost compared to Case 1-1. The first-year COE for Case 1-7 without carbon capture is also displayed. The COE without carbon capture is about eight percent lower than with carbon capture.

The dominant cost factor in the COE is the cost of natural gas. The Exhibit 4-27 COE is based on a natural gas price of 6.55 $/MMBtu. Exhibit 4-28 lists the Case 1-7 COE with and without carbon capture as a function of the price of natural gas over the range of 4.0 to 12.0 $/MMBtu. As the price of natural gas triples, the COE rises by 190 percent.

Exhibit 4-25 Case 1-7 Plant capital cost breakdown

	TOTAL PLANT COST With CCS		TOTAL PLANT COST Without CCS	
Item/Description	**$ x 1000**	**$/kW**	**$ x 1000**	**$/kW**
NATURAL GAS DESULFURIZATION	939	2	906	2
AUTOTHERMAL REACTOR & ACCESSORIES	93,312	170	66,753	121
ATR & Syngas Cooler	30,527	56	29,626	54
ASU & Oxidant Compressor	62,785	114	37,127	68
CO2 DRYING & COMPRESSION	23,210	42	0	0
SOFC POWER ISLAND	218,223	397	209,176	380
NG expander	3,846	7	3,732	7
SOFC Reactor	167,526	305	160,503	292
Cathode Air Blower	1,810	3	1,732	3
Cathode Recycle Gas Blower	4,133	8	3,958	7
Cathode Heat Exchanger	29,665	54	28,421	52
Anode Heat Exchanger	3,677	7	3,523	6
Anode Recycle Gas Blower	480	1	465	1
Oxy-Combustor	7,086	13	6,842	12
FEEDWATER & MISC. BOP SYSTEMS	10,404	19	8,811	16
HRSG, DUCTING & STACK	20,489	37	20,138	37
STEAM POWER SYSTEM	18,726	34	17,524	32
COOLING WATER SYSTEM	16,630	30	8,751	16
ACCESSORY ELECTRIC PLANT	35,467	64	20,151	37
INSTRUMENTATION & CONTROL	27,743	50	27,743	50
IMPROVEMENTS TO SITE	27,993	51	27,993	51
BUILDING & STRUCTURES	25,638	47	25,638	47
TOTAL PLANT COST ($1000)	518,772	943	433,583	788
Owner's Costs				
Preproduction Costs				
6 Months All Labor	5,062	9	5,062	9
1 Month Maintenance Materials	955	2	955	2
1 Month Non-fuel Consumables	224	0	206	0
1 Month Waste Disposal	0	0	0	0
25% of 1 Months Fuel Cost at 100% CF	0	0	0	0
2% of TPC	10,375	19	8,672	16
Total	16,616	30	14,894	27
Inventory Capital				
60 day supply of fuel and consumables at 100% CF	379	1	355	1
0.5% of TPC (spare parts)	2,594	5	2,168	4
Total	2,973	5	2,523	5
Initial Cost for Catalyst and Chemicals	838	2	802	1
Land	900	2	900	2
Other Owner's Costs	77,816	141	65,037	118
Financing Costs	14,007	25	11,707	21
Total Overnight Costs (TOC)	631,921	1,149	529,446	963
Total As-Spent Cost (TASC)	720,390	1,310	603,569	1,097

Exhibit 4-26 Case 1-7 Plant O&M cost

OPERATING & MAINTENANCE LABOR					Annual Cost $
Annual Operating Labor Cost	Number of Operators per Shift	7			2,762,159
Maintenance Labor Cost					5,336,492
Administrative & Support Labor					2,024,663
Property Taxes and Insurance					10,265,554
TOTAL FIXED OPERATING COSTS					**20,388,869**
VARIABLE OPERATING COSTS					
Maintenance Material Cost					10,310,102
Stack Replacement Cost					3,019,871
Subtotal					**13,329,973**
Consumables		Consumption	Unit	Initial	
	Initial Fill	/Day	Cost	Cost	
Water (/1000 gallons)	0	1,045	1.08	0	**371,353**
Chemicals					
MU & WT Chem. (lbs)	0	4,617	0.17	0	262,493
Natural Gas Desulfurization Sorbent (lbs)	37,937	996	5.00	189,685	1,636,534
ATR Reformer Catalyst (m3)	1,298	0.9	499.00	647,821	146,355
Subtotal Chemicals				**189,685**	**1,899,026**
TOTAL VARIABLE OPERATING COSTS				**837,505**	**15,746,708**
Fuel (MMBtu)			6.55		**156,688,345**

Exhibit 4-27 Case 1-7 Plant cost-of-electricity breakdown

First-year COE Component	$/MWh With CCS	$/MWh Without CCS
Capital charge	18.1	15.2
Fixed Operating	4.7	4.3
Variable Operating	3.6	3.6
Fuel	36.1	34.6
T&S	0.0	0.0
Total COE	62.6	57.7

Exhibit 4-28 Case 1-7 Plant COE sensitivity to NG price

Natural Gas Price ($/MMBtu)	COE ($/MWh) With CCS	COE ($/MWh) Without CCS
4.0	48.5	44.2
6.55	62.6	57.7
12.0	92.6	86.5

5 Pathway 2: Pressurized-SOFC Pathway

Pressurization of the SOFC stack provides the potential for enhanced power plant efficiency. But this comes with some greatly increased costs in the SOFC enclosures containing the pressurized stacks. The Case 2-1 baseline plant is subjected to a pathway development scenario in Cases 2-2, and 2-3.

5.1 Case 2-1: Baseline Plant Description

The Case 2-1 baseline plant utilizes a high-pressure ATR system, and considers a configuration of an NGFC plant using a pressurized-SOFC unit. NGFC with pressurized-SOFC can be configured in two alternative arrangements:

1. The anode off-gas oxy-combustor is followed by hot gas expander power generation (expansion ratio about 18). A heat recovery steam generator (HRSG) produces steam for power generation, and the remaining, low-pressure, wet CO_2 stream is dried and compressed (compression ratio about 149).
2. The anode off-gas oxy-combustor is followed directly by a HRSG for steam bottoming power generation. The remaining, high-pressure, wet CO_2 stream is dehydrated and compressed (compression ratio about 8.4)

Sensitivity studies have shown that the first approach can result in slightly higher plant efficiencies than the second (about 1 percentage-point higher) with lower COE (about 1 $/MWh lower), but the first configuration also requires the development of an advanced, high-temperature, CO_2-cooled turbine expander. The latter approach is expected to be the least complex and most effective approach and is utilized for this evaluation.

Preliminary sensitivity evaluations have been performed with the second approach to show that higher SOFC outlet pressure will result in slightly greater power plant efficiency, but with slightly greater COE. This increase in COE is due to the increasing cost of the cell stack containments at elevated pressures. This study has applied Pathway 2 with about the highest practical SOFC outlet pressure based on current gas turbine practice, 285 psia.

Case 2-1 is the baseline NGFC plant for pressurized SOFC technology. It uses a high-pressure, auto-thermal reformer (ATR) operated at 450 psia for external natural gas reforming, and it applies SOFC operating, performance, and cost specifications representing the current status of the developing SOFC technology, with the exception that the SOFC outlet pressure of 285 psia is far above current test experience. The high cold gas efficiency of the ATR (89 percent), and the high methane content of its product SOFC fuel gas (32 mole percent at dry condition) promotes high plant efficiency and low cost.

With reference to the Exhibit 5-1 block flow diagram and the Exhibit 5-2 stream table, the Case 2-1 baseline plant is described. Natural gas (Stream 1), delivered to the plant at 500 psia, is first split into two streams, a 40 percent stream to be reformed (Stream 2), and a 60 percent stream to be mixed with the reformer syngas product. The 40 percent stream to be reformed is preheated, recouping heat from the hot syngas stream. The 40 percent stream is fed to the ATR mixed with steam (Stream 4) where it is partially combusted with oxidant (Stream 5) and reacts in a catalytic reactor zone to achieve complete reformation (Stream 7). The syngas mass rate issued from the ATR is about 21 percent of the syngas rate generated in a conventional IGCC plant with CCS having the same plant net generating capacity, and a single ATR train is used.

A conventional ASU generates oxidant (99.5 percent pure) for the ATR (Stream 5) as well as for the anode off-gas oxy-combustor (Stream 6). The ASU product oxidant streams are pressurized for the ATR (550 psia) and for the oxy-combustor (285 psia). The ASU oxidant capacity is about 52 percent of the oxidant capacity of a conventional IGCC plant with CCS having the same plant net generating capacity as the Case 2-1 plant. A single ASU train is used.

The syngas mixed with the remaining natural gas and expanded to the SOFC inlet pressure (Stream 8, at 290 psia) comprises the SOFC fuel gas. Note that a portion of the pressurized syngas bypasses the expander and is used as motive gas to operate the anode gas recycle jet pump. There are six parallel SOFC sections in the plant, each containing a single cathode heat exchanger, anode heat exchanger, cathode air compressor, cathode off-gas expander, and anode gas recycle jet pump.

The SOFC fuel gas stream is preheated through the anode heat exchanger and is mixed with recycled anode gas to achieve the anode inlet temperature (Stream 10). Air (Stream 12) is boosted in pressure by the cathode air compressor (290 psia), and is preheated through the cathode heat exchanger to achieve the cathode inlet temperature (Stream 13). There is no cathode gas recycle due to the technical challenge of boosting the pressure of hot, pressurized gas. The cathode inlet gas provides the oxygen needed for the SOFC oxidation reactions, and provides cooling of the cells to maintain temperatures at an acceptable distribution. The cell cooling is aided by the reforming of methane throughout the cells, reducing the required flow of cathode air.

The cathode off-gas passes through the cathode heat exchanger and is then expanded through the cathode gas expander before being vented. The anode off-gas (Stream 11) is combusted across the oxy-combustor, generating a hot, pressurized combustion gas (Stream 15, at 274 psia) having 1 percent excess oxygen content. The HRSG raises high-pressure steam for the steam bottoming cycle, 550 psia steam for the ATR, and low-pressure steam for the auxiliary processing needs.

The NGFC steam plant has a capacity of about 60 percent of that of a conventional IGCC plant with CCS having the same plant net generating capacity. The NGFC steam plant has a capacity of about 85 percent of that of a conventional NGCC plant with CCS having the same plant net generating capacity. A single train configuration of oxy-combustor, HRSG and steam power system is used in the plant.

The cooled combustion gas is dehydrated and compressed from 270 to 2215 psia in a two-stage, intercooled compressor to generate the plant's CO_2 product for sequestration (Stream 16). The CO_2 sequestration rate is at a capacity of about 37 percent of that of a conventional IGCC plant with CCS having the same plant net generating capacity. The NGFC plant CO_2 sequestration rate is about 81 percent of that of a conventional NGCC plant with CCS having the same plant net generating capacity. Four parallel CO_2 compression trains are used in the Case 2-1 plant.

An analogous Case 2-1 NGFC power plant without carbon capture is also evaluated, again with net capacity fixed at 550 MW. This plant eliminates the oxy-combustor and CO_2 dehydration and compression system, reducing the ASU capacity almost 50 percent. The excess fuel gas in the anode off-gas is combusted with a portion of the exhaust gas issued from the cathode, and heat recovery from this hot gas stream is used for process steam and steam cycle power generation. The natural gas reforming system and the SOFC system remain the same as in the IGFC plant with carbon capture, but operate at a lower natural gas feed rate due to the plant's higher generating efficiency.

Exhibit 5-1 Case 2-1 Baseline plant block flow diagram

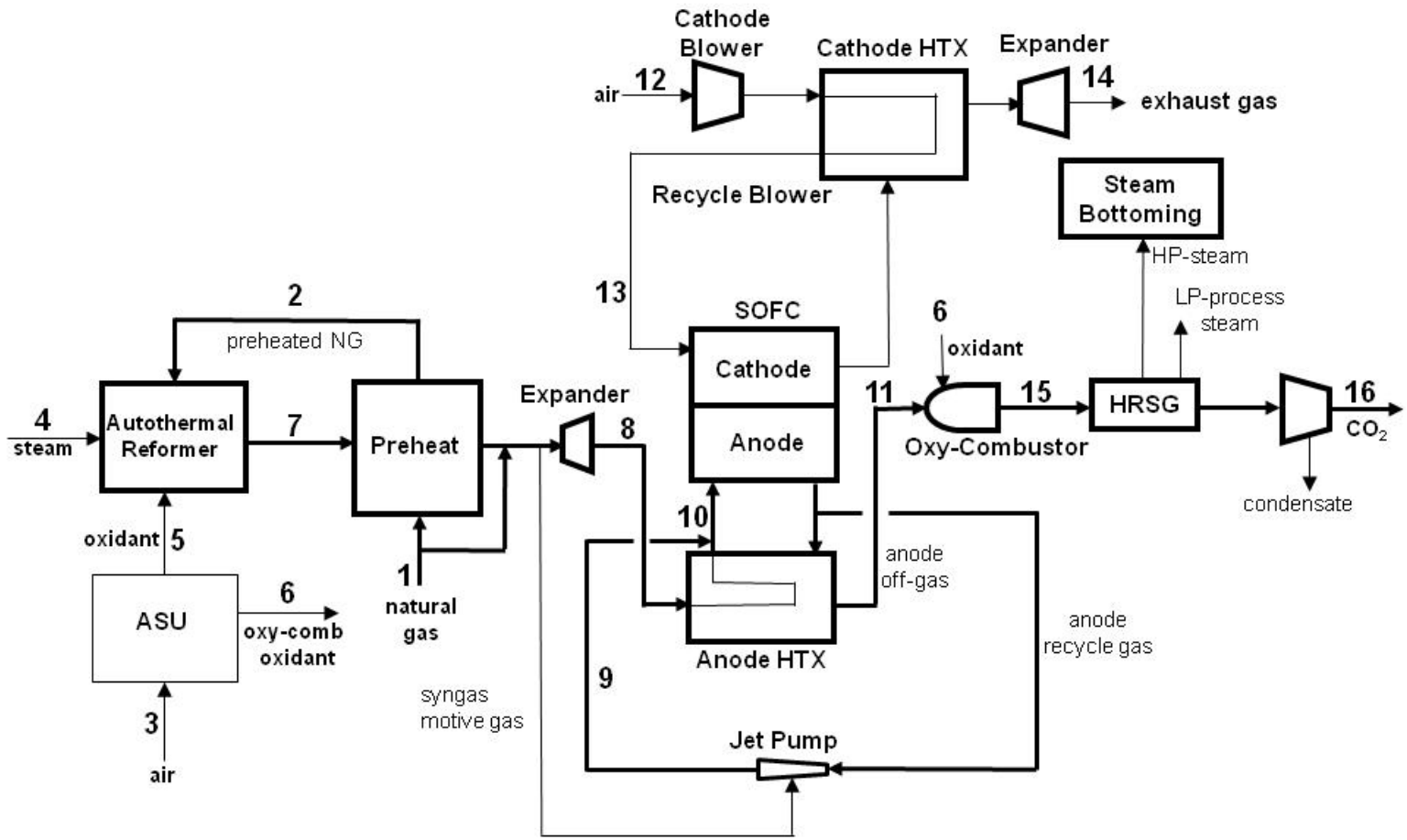

Exhibit 5-2 Case 2-1 Baseline plant stream table

	1	2	3	4	5	6	7	8	9	10	11
V-L Mole Percent											
Ar	0.00	0.00	0.94	0.00	0.31	0.31	0.05	0.03	0.02	0.03	0.02
CH_4	93.10	93.10	0.00	0.00	0.00	0.00	1.32	26.52	1.87	8.90	0.02
CO	0.00	0.00	0.00	0.00	0.00	0.00	19.02	13.80	3.56	6.47	2.79
CO_2	1.00	1.00	0.03	0.00	0.00	0.00	5.96	4.60	25.69	19.68	27.27
H_2	0.00	0.00	0.00	0.00	0.00	0.00	48.39	35.10	9.86	17.06	7.98
H_2O	0.00	0.00	1.04	100.00	0.00	0.00	24.83	18.01	58.42	46.89	61.44
N_2	1.60	1.60	77.22	0.00	0.19	0.19	0.43	0.75	0.49	0.57	0.47
Ethane	3.20	3.20	0.00	0.00	0.00	0.00	0.00	0.88	0.06	0.29	0.00
Propane	0.70	0.70	0.00	0.00	0.00	0.00	0.00	0.19	0.01	0.06	0.00
N-Butane	0.40	0.40	0.00	0.00	0.00	0.00	0.00	0.11	0.00	0.04	0.00
O_2	0.00	0.00	20.77	0.00	99.50	99.50	0.00	0.00	0.00	0.00	0.00
Total	100.00	100.00	100.00	100.00	100.00	100.00	100.00	100.00	100.00	100.00	100.00
V-L Flowrate (kg_{mol}/hr)	3,434	1,374	7,859	1,374	821	769	5,356	6,387	16,026	22,399	11,896
V-L Flowrate (kg/hr)	59,511	23,805	226,762	24,747	26,299	24,633	74,819	94,106	376,311	470,417	287,395
Solids Flowrate (kg/hr)	0	0	0	0	0	0	0	0	0	0	0
Temperature (°C)	15	477	15	260	138	136	983	473	730	650	736
Pressure (MPa, abs)	3.45	3.41	0.10	3.79	3.79	1.97	3.10	2.00	1.99	1.98	1.94
Specific Enthalpy (kJ/kg)[A]	-4,537.4	-3,185.5	-101.7	-13,135.8	101.2	100.9	-5,307.3	-5,523.0	-8,652.4	-7,824.6	-8,893.3
Density (kg/m^3)	26.9	9.4	1.2	17.6	35.3	18.5	4.1	4.7	5.0	4.9	5.0
V-L Molecular Weight	17.328	17.328	28.855	18.015	32.016	32.016	13.751	14.733	21.062	18.958	21.664
V-L Flowrate (lb_{mol}/hr)	7,572	3,029	17,326	3,028	1,811	1,696	11,807	14,081	35,331	49,381	26,226
V-L Flowrate (lb/hr)	131,200	52,480	499,924	54,558	57,980	54,306	164,948	207,468	829,625	1,037,093	633,598
Solids Flowrate (lb/hr)	0	0	0	0	0	0	0	0	0	0	0
Temperature (°F)	59	890	59	500	281	276	1,802	883	1,345	1,203	1,356
Pressure (psia)	500.0	495	14.7	550	550	285	450	290	289	287	282
Specific Enthalpy (Btu/lb)[A]	-1,950.7	-1,369.5	-43.7	-5,647.4	43.5	43.4	-2,281.7	-2,374.5	-3,719.9	-3,364.0	-3,823.4
Density (lb/ft^3)	1.679	0.586	0.076	1.098	2.206	1.153	0.253	0.295	0.313	0.304	0.313

A - Standard Reference State is the ideal vapor heat of formation at 298.15°K

Exhibit 5-2 Case 2-1 Baseline plant stream table (continued)

	12	13	14	15	16
V-L Mole Fraction					
Ar	0.94	0.94	1.00	0.04	0.13
CH_4	0.00	0.00	0.00	0.00	0.00
CO	0.00	0.00	0.00	0.00	0.00
CO_2	0.03	0.03	0.03	29.76	95.06
H_2	0.00	0.00	0.00	0.00	0.00
H_2O	1.04	1.04	1.11	68.72	0.00
N_2	77.22	77.22	82.42	0.48	1.56
Ethane	0.00	0.00	0.00	0.00	0.00
Propane	0.00	0.00	0.00	0.00	0.00
N-Butane	0.00	0.00	0.00	0.00	0.00
O_2	20.77	20.77	15.43	1.00	3.24
Total	100.00	100.00	100.00	100.00	100.00
V-L Flowrate (kg_{mol}/hr)	87,600	87,600	82,049	12,025	3,706
V-L Flowrate (kg/hr)	2,527,667	2,527,667	2,350,796	312,028	160,713
Solids Flowrate (kg/hr)	0	0	0	0	0
Temperature (°C)	15	650	118	1,995	38
Pressure (MPa, abs)	0.10	1.98	0.11	1.89	15.27
Specific Enthalpy (kJ/kg)[A]	-101.7	574.1	-9.5	-7,251.8	-8,734.0
Density (kg/m^3)	1.2	7.4	0.9	2.6	599.6
V-L Molecular Weight	28.855	28.855	28.430	25.802	42.653
V-L Flowrate (lb_{mol}/hr)	193,125	193,125	180,887	26,511	8,171
V-L Flowrate (lb/hr)	5,572,557	5,572,557	5,182,621	687,905	354,311
Solids Flowrate (lb/hr)	0	0	0	0	0
Temperature (°F)	59	1,202	245	3,624	100
Pressure (psia)	14.69999981	287	15.5	274	2215
Specific Enthalpy (Btu/lb)[A]	-43.7	246.8	-4.1	-3,117.7	-3,755.0
Density (lb/ft^3)	0.076	0.461	0.058	0.161	37.429

5.2 Case 2-1: Baseline Plant Performance

The Case 2-1 baseline plant power summary is shown in Exhibit 5-3. The dominant power generator in the plant is the SOFC system. The steam bottoming cycle generates a relatively large amount of power also, about 13.8 percent of the plant's gross output. The dominant auxiliary loads in the plant, in order, are the cathode air compression-expansion, the ASU air compression, the CO_2 compression, and the oxidant compression. The plant efficiency is 63.6 percent (HHV). The total plant auxiliary power is 13.0 percent of the gross generating capacity of the plant. The exhibit also lists the corresponding power breakdown for Case 2-1 without carbon capture. Without carbon capture the plant efficiency is about three percentage points higher.

Exhibit 5-4 provides more perspective on the stream flows though the plant. All mass flows are indicated in this simplified process schematic relative to the total natural gas feed rate. Pressures are also indicated for some key streams. The mass flows around the ASU and the ATR are small compared to the mass flows around the SOFC system. The cathode-side flows are large relative to the natural gas flow, being as much as 18 times the natural gas flow. The CO_2 product stream flow is 2.7 times the natural gas flow.

Likewise, Exhibit 5-5 provides perspective on the energy stream flows within the Case 2-1 plant. It shows the major fuel-stream flows relative to the natural gas feed stream fuel-energy content. The diagram also indicates component auxiliary power, temperatures of some key streams, and heat transfer duties of the major plant heat exchanger units.

95.7 percent of the natural gas feed stream fuel-energy passes to the SOFC system in the anode gas feed stream. Because of the need to operate with 90 percent SOFC total fuel utilization, 11.8 percent of the natural gas feed fuel-energy passes on to the oxy-combustor. The SOFC voltage is indicated on the diagram as being 0.87 volts. The Nernst potential at the anode outlet condition is 0.86 volts, at the anode inlet condition is 0.94 volts, and the average Nernst is 0.90 volts.

Exhibit 5-6 and Exhibit 5-7 tabulate the HP- and LP-steam balances for the plant. The oxy-combustor HRSG generates all of the HP- and LP-steam requirements for the plant.

Exhibit 5-8 shows the overall water balance for Case 2-1. Cooling tower makeup is the dominant water demand in the plant. The recovery of condensate from the CO_2 exit stream and the high plant efficiency result in relatively small water consumption.

The carbon balance for the plant is shown in Exhibit 5-9 for Case 2-1. The only carbon input to the plant consists of carbon in the natural gas. About 98.4 percent of the natural gas carbon content is captured in the CO_2 sequestration stream. The CO_2 recovery value is smaller than in Case 1-1 because at high pressure more CO_2 is absorbed in the condensate water streams.

Air emissions, in Exhibit 5-10, are nearly zero for Case 2-1 because all of the controlled species remaining in the very clean syngas are co-sequestered with the CO_2 product. The only CO_2 emission is from vented exhaust streams from condensate processing, with the total carbon removal exceeding 98 percent. The NOx emitted by the anode off-gas oxy-combustor will be inherently low and is assumed to meet CO_2 sequestration requirements.

Exhibit 5-3 Case 2-1 Baseline plant performance summary (100 percent load)

POWER SUMMARY		
GROSS POWER GENERATED, kWe	**With CCS**	**Without CCS**
SOFC Power	529,193	504,678
Syngas Expander Power	4,129	3,938
Combustion Expander Power	0	93,703
Steam Turbine Power	87,585	20,298
TOTAL POWER, kWe	**620,907**	**622,616**
AUXILIARY LOAD SUMMARY, kWe		
ASU Auxiliary power	269	132
ASU air compressor	12,702	6,252
Anode recycle compressor	0	0
CO2 compressor	7,247	0
BFW pump	1,389	322
Condensate pump	93	22
Circulating water pump	1,536	356
Cooling tower fans	813	179
ST auxiliaries	29	7
Cathode air compressor-expander	33,004	59,269
Cathode recycle blower	0	0
BOP	403	404
Transformer losses	2,335	2,341
TOTAL AUXILIARIES, kWe	**70,907**	**72,616**
NET POWER, kWe	**550,000**	**550,000**
Net Plant Efficiency, % (HHV)	64.8	67.9
Net Plant Heat Rate, kJ/kWh (Btu/kWh)	5,559 (5,269)	5,302 (5,025)
CONDENSER COOLING DUTY 10^6 kJ/h (10^6 Btu/h)	484 (459)	139 (132)
CONSUMABLES		
Natural Gas Feed, kg/h (lb/h)	58,436 (128,829)	55,728 (122,859)
Thermal Input[1], kWt	849,396	810,037
Raw Water Consumption, m^3/min (gpm)	2.4 (623)	1.4 (360)

Exhibit 5-4 Case 2-1 Baseline plant mass flow diagram

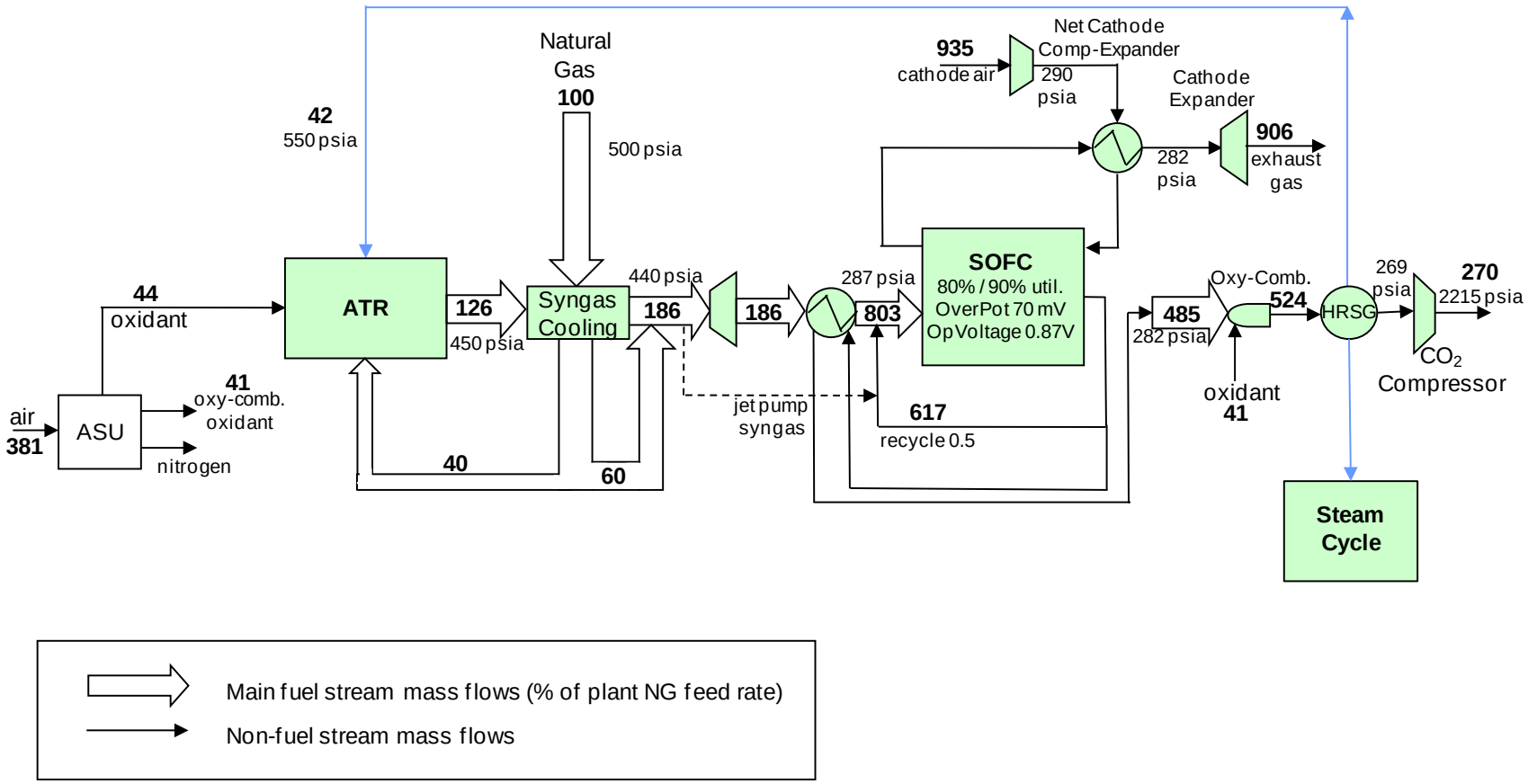

Exhibit 5-5 Case 2-1 Baseline plant energy flow diagram

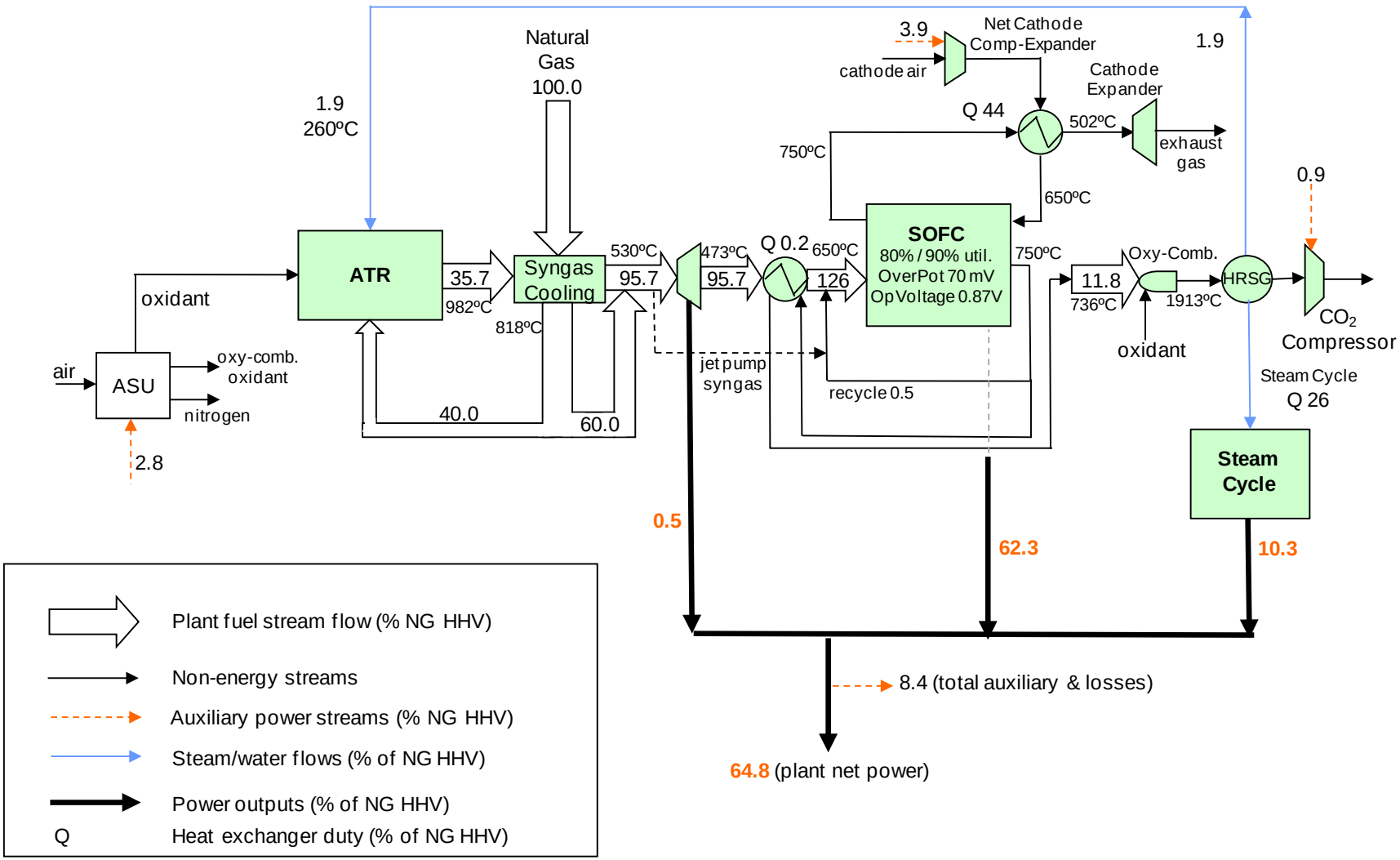

Exhibit 5-6 Case 2-1 Baseline plant high-pressure steam balance

HP Process Steam Use, kg/hr (lb/hr)		HP Process Steam Generation, kg/hr (lb/hr)	
Reformer feed	24,748 (54,560)	**Oxy-combustor heat**	24,748 (54,560)
Total	24,748 (54,560)	**Total**	24,748 (54,560)
HP Power-Steam generation, GJ/hr (MMBtu/hr)			
Oxy-combustor HRSG	814 (771)		
Total	814 (771)		

Exhibit 5-7 Case 2-1 Baseline plant low-pressure steam balance

LP Process Steam Use, GJ/hr (MMBtu/hr)		LP Process Steam Generation, GJ/hr (MMBtu/hr)	
ASU	20 (19)	**Oxy-combustor HRSG**	20 (19)
Total	20 (19)	**Total**	20 (19)

Exhibit 5-8 Case 2-1 Baseline plant water balance

	m^3/min (gpm)
Water Demand	**6.2 (1,631)**
Condenser Makeup *Reformer Steam* *BFW Makeup*	0.5 (130) *0.4 (109)* *0.1 (21)*
Cooling Tower Makeup	5.7 (1,501)
Water Recovery for Reuse	**2.3 (600)**
CO_2 Dehydration	2.3 (600)
Process Discharge Water	**1.4 (379)**
Cooling Tower Water Blowdown	1.2 (322)
CO_2 Dehydration	0.2 (57)
Raw Water Consumed	**4.59 (1,212)**

Exhibit 5-9 Case 2-1 Baseline plant carbon balance

Carbon In, kg/hr (lb/hr)		Carbon Out, kg/hr (lb/hr)	
Natural Gas	42,985 (94,766)	**Exhaust Gas**	670 (1,478)
		CO_2 Product	42,315 (93,288)
Total	42,985 (94,766)	**Total**	42,985 (94,766)

Exhibit 5-10 Case 2-1 Baseline plant air emissions

	kg/GJ (lb/10^6 Btu)	Tonne/year (tons/year) 80% capacity factor	kg/MWh (lb/MWh)
NO_X	0 (0)	0 (0)	0 (0)
CO_2	0.79 (1.84)	17,222 (18,984)	4.47 (9.85)

5.3 Case 2-1: Baseline Plant Cost Results

Capital cost estimates for Case 2-1 are broken down in Exhibit 5-11. The SOFC power island, at 732 $/kW represents 57 percent of the total plant cost. The SOFC units cost 69 percent of the SOFC power island. The other costs in the power island are relatively small. The next highest capital costs in the plant are those of the ASU and the ATR systems, with the steam bottoming cycle and its related water systems also being significant. The exhibit also lists the corresponding equipment costs for Case 2-1 without carbon capture. The total plant cost is about seventeen percent lower when carbon capture is eliminated.

The plant operating and maintenance costs, and the first-year COE for Case 2-1 are displayed in Exhibit 5-12 and Exhibit 5-13. These cost results yield an estimate for the avoided CO_2 cost of 14.2 $/ton CO_2, relative to the conventional PC power plant with supercritical steam and without CCS. The first-year COE for Case 2-1 without carbon capture is also displayed. The COE without carbon capture is about nine percent lower than with carbon capture.

The dominant cost factor in the COE is the cost of natural gas. The Exhibit 5-13 COE is based on a natural gas price of 6.55 $/MMBtu. Exhibit 5-14 lists the Case 2-1 COE with and without carbon capture as a function of the price of natural gas over the range of 4.0 to 12.0 $/MMBtu. As the price of natural gas triples, the COE rises by 180 percent.

Exhibit 5-11 Case 2-1 Baseline plant capital cost breakdown

	TOTAL PLANT COST With CCS		TOTAL PLANT COST Without CCS	
Item/Description	**$ x 1000**	**$/kW**		
NATURAL GAS DESULFURIZATION	904	2	869	2
AUTOTHERMAL REACTOR & ACCESSORIES	90,918	165	64,025	116
ATR & Syngas Cooler	29,562	54	28,596	52
ASU & Oxidant Compressor	61,356	112	35,428	64
CO_2 DRYING & COMPRESSION	11,335	21	0	0
SOFC POWER ISLAND	338,455	615	329,113	598
NG expander	1,300	2	1,257	2
SOFC Reactor	273,199	497	260,543	474
Cathode Air Compressor	33,494	61	32,920	60
Cathode Gas Expander	13,994	25	13,754	25
Combustion Expander	0	0	4,873	9
Cathode Heat Exchanger	9,133	17	8,710	16
Anode Heat Exchanger	8	0	8	0
Anode Recycle Gas Jet Pump	224	0	216	0
Oxy/Air-Combustor	7,103	13	6,832	12
FEEDWATER & MISC. BOP SYSTEMS	8,086	15	5,620	10
HRSG, DUCTING & STACK	25,628	47	11,418	21
STEAM POWER SYSTEM	23,881	43	8,582	16
COOLING WATER SYSTEM	14,311	26	4,968	9
ACCESSORY ELECTRIC PLANT	44,745	81	45,497	83
INSTRUMENTATION & CONTROL	27,743	50	27,743	50
IMPROVEMENTS TO SITE	27,993	51	27,993	51
BUILDING & STRUCTURES	25,638	47	25,638	47
TOTAL PLANT COST ($1000)	**639,634**	**1,163**	**551,465**	**1,003**
Owner's Costs				
Preproduction Costs				
6 Months All Labor	5,062	9	5,062	9
1 Month Maintenance Materials	1,011	2	1,011	2
1 Month Non-fuel Consumables	199	0	175	0
1 Month Waste Disposal	0	0	0	0
25% of 1 Months Fuel Cost at 100% CF	0	0	0	0
2% of TPC	12,793	23	11,029	20
Total	19,064	35	17,276	31
Inventory Capital				
60 day supply of fuel and consumables at 100% CF	349	1	321	1
0.5% of TPC (spare parts)	3,198	6	2,757	5
Total	3,547	6	3,078	6
Initial Cost for Catalyst and Chemicals	796	1	760	1
Land	900	2	900	2
Other Owner's Costs	95,945	174	82,720	150
Financing Costs	17,270	31	14,890	27
Total Overnight Costs (TOC)	777,157	1,413	671,089	1,220
Total As-Spent Cost (TASC)	885,959	1,611	765,041	1,391

Exhibit 5-12 Case 2-1 Baseline plant O&M cost

OPERATING & MAINTENANCE LABOR					Annual Cost $
Annual Operating Labor Cost	Number of Operators per Shift	7			2,762,159
Maintenance Labor Cost					5,336,492
Administrative & Support Labor					2,024,663
Property Taxes and Insurance					12,624,918
TOTAL FIXED OPERATING COSTS					**22,748,232**
VARIABLE OPERATING COSTS					
Maintenance Material Cost					10,310,102
Stack Replacement Cost					4,465,626
Subtotal					**14,775,728**
Consumables		Consumption	Unit	Initial	
	Initial Fill	/Day	Cost	Cost	
Water (/1000 gallons)	0	729	1.08	0	**244,645**
Chemicals					
MU & WT Chem. (lbs)	0	3,221	0.17	0	172,929
Natural Gas Desulfurization Sorbent (lbs)	36,235	952	5.00	181,177	1,476,290
ATR Reformer Catalyst (m3)	1,233	0.8	499.00	615,319	131,289
Subtotal Chemicals				**181,177**	**1,649,219**
TOTAL VARIABLE OPERATING COSTS				**796,496**	**16,800,881**
Fuel (MMBtu)			6.55		**141,346,015**

Exhibit 5-13 Case 2-1 Baseline plant cost-of-electricity breakdown

First-year COE Component	$/MWh With CCS	$/MWh Without CCS
Capital charge	23.6	20.4
Fixed Operating	5.6	5.1
Variable Operating	4.1	4.0
Fuel	34.5	32.9
T&S	0.0	0.0
Total COE	67.8	62.4

Exhibit 5-14 Case 2-1 Baseline plant COE sensitivity to NG price

Natural Gas Price ($/MMBtu)	COE ($/MWh) With CCS	COE ($/MWh) Without CCS
4.0	54.3	49.6
6.55	67.8	62.4
12.0	96.5	89.8

5.4 Pathway 2 Results

The pathway variations from baseline Case 2-1 include cases where only cost is modified by the pathway step (Cases 2-2 and 2-3) due to improved plant availability, and reduced cost of the SOFC stack.

Exhibit 5-15 displays the major results for all of the Pathway 2 steps. The tabulation shows a climb in the plant efficiency and a reduction in the plant cost.

Exhibit 5-15 Pathway 2 results

CASE	Baseline 2-1	2-2	2-3
Pathway Parameters			
NG Reformer Type	ATR	ATR	ATR
Fuel Utilization (%)	90	90	90
SOFC Pressure (psia)	**285**	285	285
Cell Overpotential (mV)	70	70	70
Plant Capacity Factor (%)	85	85	**90**
Cell Degradation (%/1000 hr)	0.2	0.2	0.2
Stack Cost ($/kW SOFC)	**442**	**414**	442
Stack Block Cost ($/kW SOFC)	**140**	**112**	140
Inverter Efficiency (%)	98	98	98
Plant Performance			
Net Efficiency (% HHV)	**64.8**	**64.8**	**64.8**
Cell Voltage (V)	0.93	0.87	0.87
Anode Inlet Gas O/C Atomic Ratio	2.6	2.6	2.6
Plant Water Consumption (gpm/MW)	1.1	1.1	1.1
Plant Cost			
TOC ($/kW)	1,413	1,375	1,375
First-Year COE ($/MWh)	**67.8**	**67.0**	**65.3**
Capital Charge	23.6	22.9	21.7
Fixed Operating	5.6	5.5	5.2
Variable Operating	4.1	4.1	3.9
Fuel (@ 6.55 $/MMBtu)	34.5	34.5	34.5
COE w NG price 4 $/MMBtu	**54.3**	**53.6**	**51.8**
COE w NG price 12 $/MMBtu	**96.5**	**95.8**	**94.0**

5.5 Case 2-3: Plant Description

The block flow diagram in Exhibit 5-16 is identical for all of the Pathway 2 cases, and stream tables are presented.

With reference to the Exhibit 5-1 block flow diagram and the Exhibit 5-16 stream table, the Case 2-3 plant is described. Natural gas (Stream 1), delivered to the plant at 500 psia, is first split into two streams, a 40 percent stream to be reformed (Stream 2), and a 60 percent stream to be mixed with the reformer syngas product. The 40 percent stream to be reformed is preheated, recouping heat from the hot syngas stream. The 40 percent stream is fed to the ATR mixed with steam (Stream 4) where it is partially combusted with oxidant (Stream 5) and reacts in a catalytic reactor zone to achieve complete reformation (Stream 7). The syngas mass rate issued from the ATR is about 19.7 percent of the syngas rate generated in a conventional IGCC plant with CCS having the same plant net generating capacity, and a single ATR train is used.

A conventional ASU generates oxidant (99.5 percent pure) for the ATR (Stream 5) as well as for the anode off-gas oxy-combustor (Stream 6). The ASU product oxidant streams are compressed for the ATR (550 psia) and for the oxy-combustor (285 psia). The ASU oxidant capacity is about 30 percent of the oxidant capacity of a conventional IGCC plant with CCS having the same plant net generating capacity as the Case 2-1 plant. A single ASU train is used.

The syngas mixed with the remaining natural gas and expanded to the SOFC inlet pressure (Stream 8, at 290 psia) comprises the SOFC fuel gas. Note that a portion of the pressurized syngas bypasses the expander and is used as motive gas to operate the anode gas recycle jet pump. There are six parallel SOFC sections in the plant, each containing a single cathode heat exchanger, anode heat exchanger, cathode air compressor, cathode off-gas expander, and anode gas recycle jet pump.

The SOFC fuel gas stream is preheated through the anode heat exchanger and is mixed with recycled anode gas to achieve the anode inlet temperature (Stream 10). Air (Stream 12) is boosted in pressure by the cathode air compressor (290 psia), and is preheated through the cathode heat exchanger to achieve the cathode inlet temperature (Stream 13). There is no cathode gas recycle due to the technical challenge of boosting the pressure of hot, pressurized gas. The cathode inlet gas provides the oxygen needed for the SOFC oxidation reactions, and provides cooling of the cells to maintain temperatures at an acceptable distribution. The cell cooling is aided by the reforming of methane throughout the cells, reducing the required flow of cathode air.

The cathode off-gas passes through the cathode heat exchanger and is then expanded through the cathode gas expander before being vented. The anode off-gas (Stream 11) is combusted across the oxy-combustor, generating a hot, pressurized combustion gas (Stream 15, at 274 psia) having 1 percent excess oxygen content. The HRSG raises high-pressure steam for the steam bottoming cycle, 550 psia steam for the ATR, and low-pressure steam for the auxiliary processing needs.

The NGFC steam plant has a capacity of about 36 percent of that of a conventional IGCC plant with CCS having the same plant net generating capacity. The NGFC steam plant has a capacity of about 50 percent of that of a conventional NGCC plant with CCS having the same plant net generating capacity. A single train configuration of oxy-combustor, HRSG and steam power system is used in the plant.

The cooled combustion gas is dehydrated and compressed to 2215 psia in a two-stage, intercooled compressor to generate the plant's CO_2 product for sequestration (Stream 16). The CO_2 sequestration rate is at a capacity of about 35 percent of that of a conventional IGCC plant with CCS having the same plant net generating capacity. The NGFC plant CO_2 sequestration rate is about 76 percent of that of a conventional NGCC plant with CCS having the same plant net generating capacity. Four parallel CO_2 compression trains are used in the Case 2-3 plant.

An analogous Case 2-3 NGFC power plant without carbon capture is also evaluated, again with net capacity fixed at 550 MW. This plant eliminates the oxy-combustor and CO_2 dehydration and compression system, reducing the ASU capacity almost 50 percent. The excess fuel gas in the anode off-gas is combusted with a portion of the exhaust gas issued from the cathode, and heat recovery from this hot gas stream is used for process steam and steam cycle power generation. The natural gas reforming system and the SOFC system remain the same as in the IGFC plant with carbon capture, but operate at a lower natural gas feed rate due to the plant's higher generating efficiency.

Exhibit 5-16 Case 2-3 Plant stream table

	1	2	3	4	5	6	7	8	9	10	11
V-L Mole Percent											
Ar	0.00	0.00	0.94	0.00	0.31	0.31	0.05	0.03	0.02	0.03	0.02
CH_4	93.10	93.10	0.00	0.00	0.00	0.00	1.34	26.54	1.87	8.90	0.02
CO	0.00	0.00	0.00	0.00	0.00	0.00	19.00	13.78	3.56	6.47	2.79
CO_2	1.00	1.00	0.03	0.00	0.00	0.00	5.97	4.60	25.69	19.68	27.27
H_2	0.00	0.00	0.00	0.00	0.00	0.00	48.39	35.10	9.86	17.06	7.98
H_2O	0.00	0.00	1.04	100.00	0.00	0.00	24.82	18.00	58.42	46.89	61.44
N_2	1.60	1.60	77.22	0.00	0.19	0.19	0.43	0.75	0.49	0.57	0.47
Ethane	3.20	3.20	0.00	0.00	0.00	0.00	0.00	0.88	0.06	0.29	0.00
Propane	0.70	0.70	0.00	0.00	0.00	0.00	0.00	0.19	0.01	0.06	0.00
N-Butane	0.40	0.40	0.00	0.00	0.00	0.00	0.00	0.11	0.01	0.04	0.00
O_2	0.00	0.00	20.77	0.00	99.50	99.50	0.00	0.00	0.00	0.00	0.00
Total	100.00	100.00	100.00	100.00	100.00	100.00	100.00	100.00	100.00	100.00	100.00
V-L Flowrate (kg_{mol}/hr)	3,447	1,379	7,888	1,379	824	772	5,462	6,411	16,072	22,483	11,941
V-L Flowrate (kg/hr)	59,736	23,894	227,617	24,840	26,367	24,726	75,101	94,461	377,730	472,191	288,479
Solids Flowrate (kg/hr)	0	0	0	0	0	0	0	0	0	0	0
Temperature (°C)	15	477	15	260	138	136	982	472	734	667	736
Pressure (MPa, abs)	3.45	3.41	0.10	3.79	3.79	1.97	3.10	2.00	1.99	1.98	1.94
Specific Enthalpy (kJ/kg)[A]	-4,537.4	-3,185.5	-101.7	-13,135.8	101.2	100.9	-5,309.5	-5,524.3	-9,372.3	-8,587.3	-9,580.5
Density (kg/m^3)	26.9	9.4	1.2	17.6	35.3	18.5	4.1	4.7	5.6	5.3	5.6
V-L Molecular Weight	17.328	17.328	28.855	18.015	32.016	32.016	13.751	14.734	23.503	21.002	24.159
V-L Flowrate (lb_{mol}/hr)	7,600	3,040	17,391	3,040	1,816	1,703	12,041	14,134	35,432	49,567	26,325
V-L Flowrate (lb/hr)	131,695	52,678	501,809	54,764	58,130	54,511	165,570	208,250	832,753	1,041,004	635,987
Solids Flowrate (lb/hr)	0	0	0	0	0	0	0	0	0	0	0
Temperature (°F)	59	890	59	500	281	276	1,800	882	1,354	1,232	1,357
Pressure (psia)	500.0	495	14.7	550	550	285	450	290	289	287	282
Specific Enthalpy (Btu/lb)[A]	-1,950.7	-1,369.5	-43.7	-5,647.4	43.5	43.4	-2,282.7	-2,375.0	-4,029.4	-3,691.9	-4,118.9
Density (lb/ft^3)	1.679	0.586	0.076	1.098	2.206	1.153	0.254	0.295	0.349	0.331	0.349

Exhibit 5-16 Case 2-3 Plant stream table (continued)

	12	13	14	15	16
V-L Mole Fraction					
Ar	0.94	0.94	0.97	0.04	0.13
CH_4	0.00	0.00	0.00	0.00	0.00
CO	0.00	0.00	0.00	0.00	0.00
CO_2	0.03	0.03	0.03	29.76	95.06
H_2	0.00	0.00	0.00	0.00	0.00
H_2O	1.04	1.04	1.07	68.72	0.00
N_2	77.22	77.22	79.50	0.48	1.56
Ethane	0.00	0.00	0.00	0.00	0.00
Propane	0.00	0.00	0.00	0.00	0.00
N-Butane	0.00	0.00	0.00	0.00	0.00
O_2	20.77	20.77	18.43	1.00	3.24
Total	100.00	100.00	100.00	100.00	100.00
V-L Flowrate (kg_{mol}/hr)	193,618	193,618	188,070	12,070	3,720
V-L Flowrate (kg/hr)	5,586,792	5,586,792	5,409,254	313,204	161,319
Solids Flowrate (kg/hr)	0	0	0	0	0
Temperature (°C)	15	650	133	1,281	38
Pressure (MPa, abs)	0.10	1.98	0.11	1.89	15.27
Specific Enthalpy (kJ/kg)[A]	-101.7	574.1	15.4	-8,816.1	-8,833.6
Density (kg/m^3)	1.2	7.4	0.9	3.8	646.5
V-L Molecular Weight	28.855	28.855	28.762	25.948	43.364
V-L Flowrate (lb_{mol}/hr)	426,856	426,856	414,624	26,611	8,201
V-L Flowrate (lb/hr)	12,316,778	12,316,778	11,925,373	690,498	355,648
Solids Flowrate (lb/hr)	0	0	0	0	0
Temperature (°F)	59	1,202	271	2,338	100
Pressure (psia)	14.69999981	287	15.5	274	2215
Specific Enthalpy (Btu/lb)[A]	-43.7	246.8	6.6	-3,790.2	-3,797.7
Density (lb/ft^3)	0.076	0.461	0.057	0.236	40.360

5.6 Case 2-3: Plant Performance

The Case 2-3 plant power summary is shown in Exhibit 5-17. The dominant power generator in the plant is the SOFC system. The steam bottoming cycle generates a relatively small amount of power also, about 14 percent of the plant's gross output. The dominant auxiliary loads in the plant, in order, are the cathode air compression-expansion, the ASU air compression, the oxidant compression, and the CO_2 compression. The plant efficiency is 63.6 percent (HHV). The total plant auxiliary power is 13.0 percent of the gross generating capacity of the plant. The exhibit also lists the corresponding power breakdown for Case 2-3 without carbon capture. Without carbon capture the plant efficiency is about three percentage points higher.

Exhibit 5-18 provides more perspective on the stream flows though the plant. All mass flows are indicated in this simplified process schematic relative to the total natural gas feed rate. Pressures are also indicated for some key streams. The mass flows around the ASU and the ATR are small compared to the mass flows around the SOFC system. The cathode-side flows are large relative to the natural gas flow, being as much as 9 times the natural gas flow. The CO_2 product stream flow is 2.7 times the natural gas flow.

Likewise, Exhibit 5-19 provides perspective on the energy stream flows within the Case 2-3 plant. It shows the major fuel-stream flows relative to the natural gas feed stream fuel-energy content. The diagram also indicates component auxiliary power, temperatures of some key streams, and heat transfer duties of the major plant heat exchanger units.

95.7 percent of the natural gas feed stream fuel-energy passes to the SOFC system in the anode gas feed stream. Because the plant operates with 90 percent SOFC total fuel utilization, 11.8 percent of the natural gas feed fuel-energy passes on to the oxy-combustor. The cathode heat exchanger has a large duty, at 43.5 percent of the total natural gas fuel-energy content.

The SOFC voltage is indicated on the diagram as being 0.93 volts. The Nernst potential at the anode outlet condition is 0.93 volts, at the anode inlet condition is 1.00 volts, and the average Nernst is 0.96 volts.

Exhibit 5-20 and Exhibit 5-21 tabulate the HP- and LP-steam balances for the plant. The oxy-combustor HRSG generates all of the HP- and LP-steam requirements for the plant.

Exhibit 5-22 shows the overall water balances for Case 2-3. Cooling tower makeup is the dominant water demand in the plant. The recovery of condensate from the CO_2 exit stream and the high plant efficiency result in relatively small water consumption.

The carbon balance for the plant is shown in Exhibit 5-23 for Case 2-3. The only carbon input to the plant consists of carbon in the natural gas. About 98.4 percent of the natural gas carbon content is captured in the CO_2 sequestration stream. The CO_2 recovery value is smaller than in Case 1-1 because at high pressure more CO_2 is absorbed in the condensate water streams.

Air emissions, in Exhibit 5-24, are nearly zero for Case 2-3 because all of the controlled species remaining in the very clean syngas are co-sequestered with the CO_2 product. The only CO_2 emission is from vented exhaust streams from condensate processing, with the total carbon removal exceeding 98 percent. The NOx emitted by the anode off-gas oxy-combustor will be inherently low and is assumed to meet CO_2 sequestration requirements.

Exhibit 5-17 Case 2-3 Plant performance summary (100 percent load)

POWER SUMMARY		
GROSS POWER GENERATED, kWe	**With CCS**	**Without CCS**
SOFC Power	483,560	504,678
Syngas Expander Power	16,123	3,938
Combustion Expander Power	0	93.703
Steam Turbine Power	87,585	20,298
TOTAL POWER, kWe	**620,907**	**622,616**
AUXILIARY LOAD SUMMARY, kWe		
ASU Auxiliary power	269	132
ASU air compressor	12,193	6,252
Anode recycle compressor	1,842	0
CO_2 compressor	7,247	0
BFW pump	1,389	322
Condensate pump	93	22
Circulating water pump	1,536	356
Cooling tower fans	813	179
ST auxiliaries	29	7
Cathode air compressor-expander	0	59,269
Cathode recycle blower	6,086	0
BOP	403	404
Transformer losses	2,335	2,341
TOTAL AUXILIARIES, kWe	**39,872**	**72,616**
NET POWER, kWe	**550,000**	**550,000**
Net Plant Efficiency, % (HHV)	64.8	67.9
Net Plant Heat Rate, kJ/kWh (Btu/kWh)	5,559 (5,269)	5,302 (5,025)
CONDENSER COOLING DUTY 10^6 kJ/h (10^6 Btu/h)	139 (132)	139 (132)
CONSUMABLES		
Natural Gas Feed, kg/h (lb/h)	58,436 (128,829)	55,728 (122,859)
Thermal Input[1], kWt	849,396	810,037
Raw Water Consumption, m^3/min (gpm)	1.4 (360)	1.4 (360)

Exhibit 5-18 Case 2-3 Plant mass flow diagram

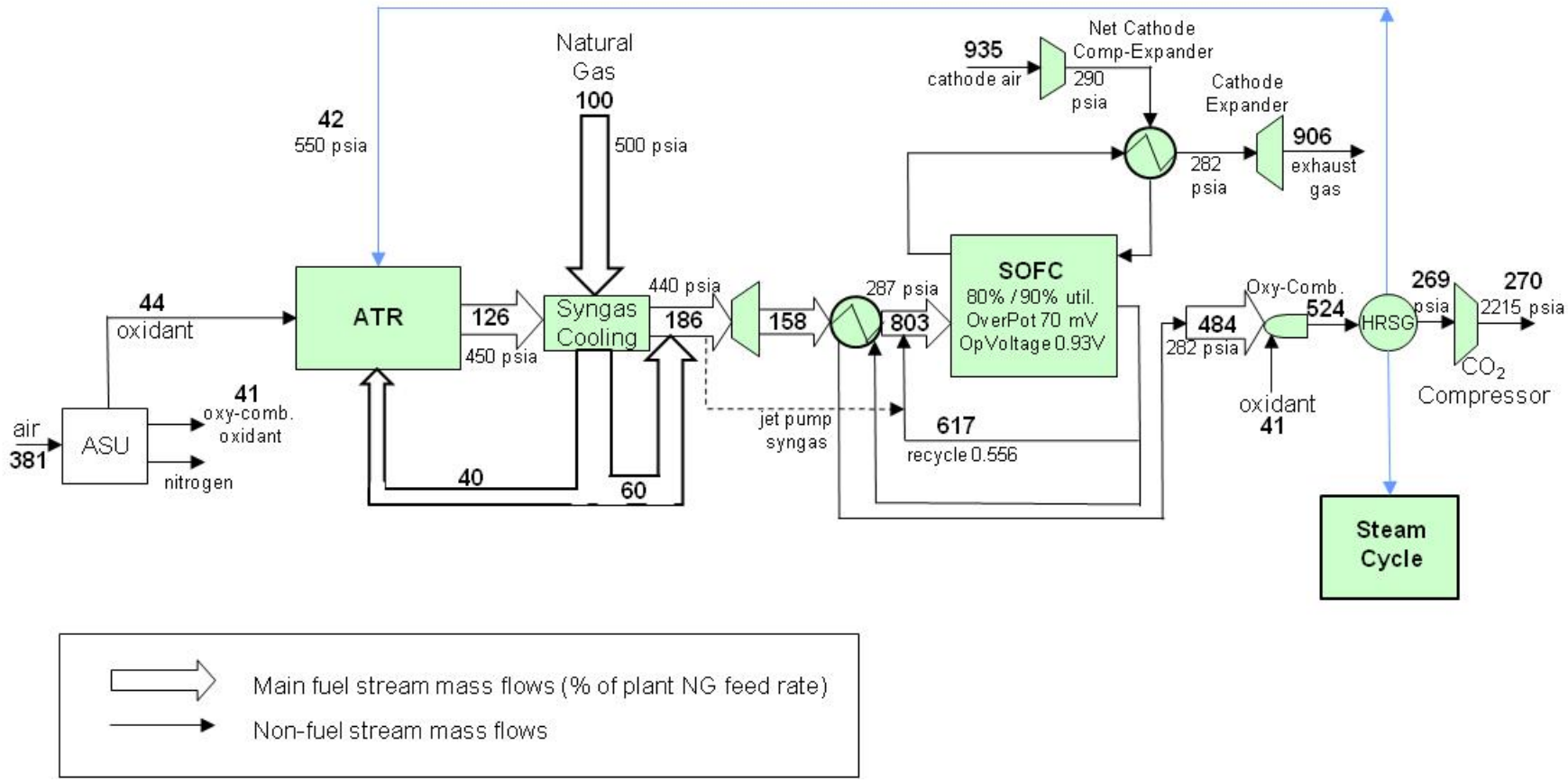

Exhibit 5-19 Case 2-3 Plant energy flow diagram

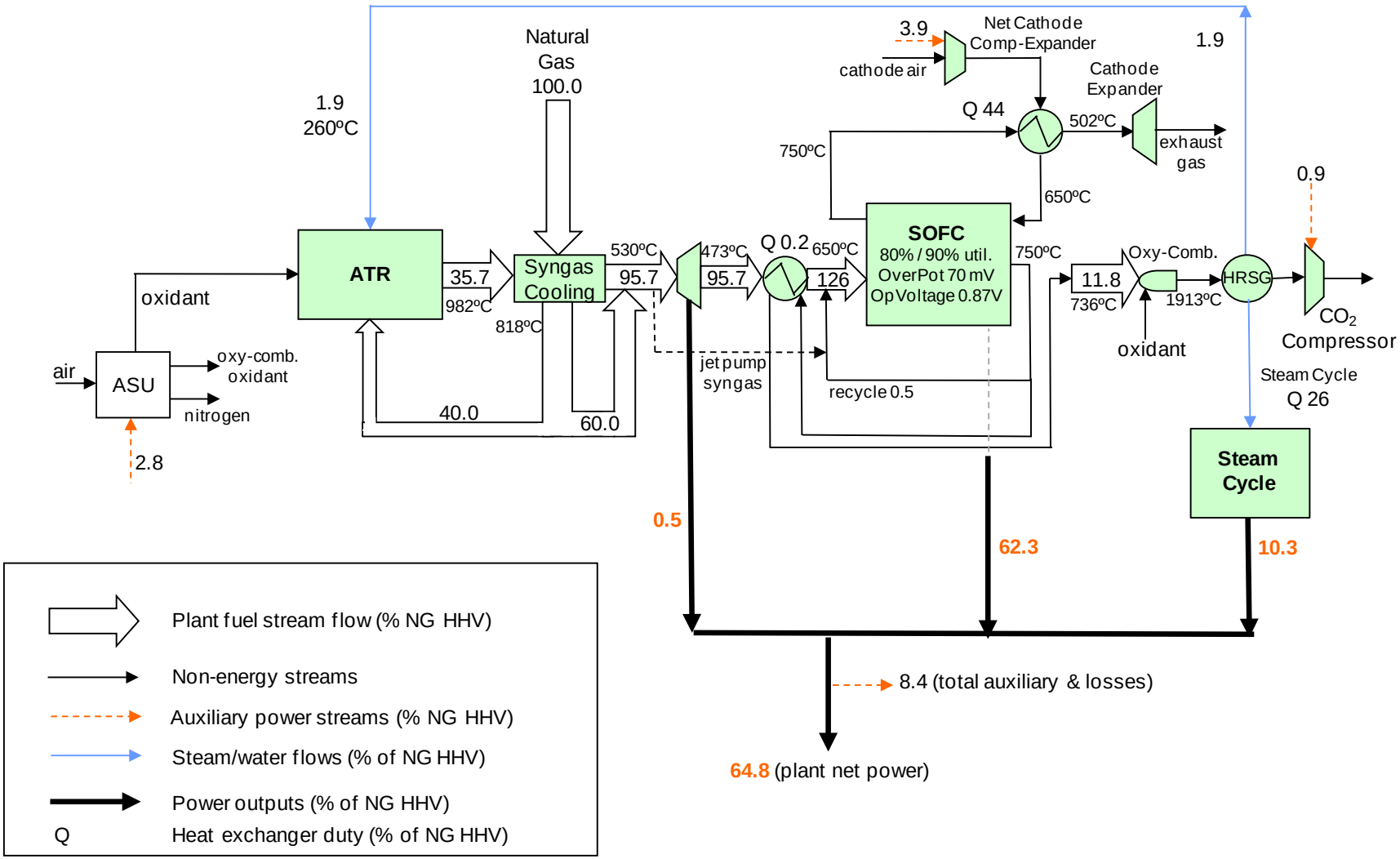

Exhibit 5-20 Case 2-3 Plant high-pressure steam balance

HP Process Steam Use, kg/hr (lb/hr)		HP Process Steam Generation, kg/hr (lb/hr)	
Reformer feed	24,748 (54,560)	**Oxy-combustor heat**	24,748 (54,560)
Total	24,748 (54,560)	**Total**	24,748 (54,560)
HP Power-Steam generation, GJ/hr (MMBtu/hr)			
Oxy-combustor HRSG	814 (716)		
Total	814 (716)		

Exhibit 5-21 Case 2-3 Plant low-pressure steam balance

LP Process Steam Use, GJ/hr (MMBtu/hr)		LP Process Steam Generation, GJ/hr (MMBtu/hr)	
ASU	20 (19)	**Oxy-combustor HRSG**	20 (19)
Total	20 (19)	**Total**	20 (19)

Exhibit 5-22 Case 2-3 Plant water balance

	m^3/min (gpm)
Water Demand	**6.18 (1,632)**
Condenser Makeup *Reformer Steam* *BFW Makeup*	0.49 (131) *0.41 (109)* *0.08 (22)*
Cooling Tower Makeup	5.68 (1,501)
Water Recovery for Reuse	**2.27 (600)**
CO_2 Dehydration	2.27 (600)
Process Discharge Water	**1.51 (398)**
Cooling Tower Water Blowdown	1.28 (338)
CO_2 Dehydration	0.23 (60)
Raw Water Consumed	**2.40 (635)**

Exhibit 5-23 Case 2-3 Plant carbon balance

Carbon In, kg/hr (lb/hr)		Carbon Out, kg/hr (lb/hr)	
Natural Gas	42,985 (95,766)	**Exhaust Gas**	700 (1,542)
		CO_2 Product	42,285 (93,223)
Total	42,985 (95,766)	**Total**	42,985 (95,766)

Exhibit 5-24 Case 2-3 Plant air emissions

	kg/GJ (lb/10^6 Btu)	Tonne/year (tons/year) 80% capacity factor	kg/MWh (lb/MWh)
NO_X	0 (0)	0 (0)	0 (0)
CO_2	0.82 (1.92)	17,977 (19,816)	4.66 (10.28)

5.7 Case 2-3: Plant Cost Results

Capital cost estimates for Case 2-3 are broken down in Exhibit 5-25. The SOFC power island, at 700 $/kW represents 56 percent of the total plant cost. The SOFC units cost 68 percent of the SOFC power island. The other costs in the power island are relatively small. The next highest capital costs in the plant are those of the ASU and the ATR systems, with the steam bottoming cycle and its related water systems also being significant. The exhibit also lists the corresponding equipment costs for Case 2-3 without carbon capture. The total plant cost is about seventeen percent lower when carbon capture is eliminated.

The plant operating and maintenance costs, and the first-year COE for Case 2-3 are displayed in Exhibit 5-26 and Exhibit 5-27. These cost results yield an estimate for the avoided CO_2 cost of 14.1 $/ton CO_2, relative to the conventional PC power plant with supercritical steam and without CCS. The first-year COE for Case 2-3 without carbon capture is also displayed. The COE without carbon capture is about nine percent lower than with carbon capture.

The dominant cost factor in the COE is the cost of natural gas. The Exhibit 5-27 COE is based on a natural gas price of 6.55 $/MMBtu. Exhibit 5-28 lists the Case 2-3 COE with and without carbon capture as a function of the price of natural gas over the range of 4.0 to 12.0 $/MMBtu. As the price of natural gas triples, the COE rises by 180 percent.

Exhibit 5-25 Case 2-3 Plant capital cost breakdown

	TOTAL PLANT COST With CCS		TOTAL PLANT COST Without CCS	
Item/Description	**$ x 1000**	**$/kW**	**$ x 1000**	**$/kW**
NATURAL GAS DESULFURIZATION	904	2	869	2
AUTOTHERMAL REACTOR & ACCESSORIES	90,918	165	64,025	116
ATR & Syngas Cooler	29,562	54	28,596	52
ASU & Oxidant Compressor	61,356	112	35,428	64
CO2 DRYING & COMPRESSION	11,335	21	0	0
SOFC POWER ISLAND	321,148	584	312,608	568
NG expander	1,300	2	1,257	2
SOFC Reactor	255,892	465	244,038	444
Cathode Air Compressor	33,494	61	32,920	60
Cathode Gas Expander	13,994	25	13,754	25
Combustion Expander	0	0	4,873	9
Cathode Heat Exchanger	9,133	17	8,710	16
Anode Heat Exchanger	8	0	8	0
Anode Recycle Gas Jet Pump	224	0	216	0
Oxy-Combustor	7,103	13	6,832	12
FEEDWATER & MISC. BOP SYSTEMS	8,086	15	5,620	10
HRSG, DUCTING & STACK	25,628	47	11,418	21
STEAM POWER SYSTEM	23,881	43	8,582	16
COOLING WATER SYSTEM	14,311	26	4,968	9
ACCESSORY ELECTRIC PLANT	44,745	81	45,497	83
INSTRUMENTATION & CONTROL	27,743	50	27,743	50
IMPROVEMENTS TO SITE	27,993	51	27,993	51
BUILDING & STRUCTURES	25,638	47	25,638	47
TOTAL PLANT COST ($1000)	622,328	1,132	534,960	973
Owner's Costs				
Preproduction Costs				
6 Months All Labor	5,062	9	5,062	9
1 Month Maintenance Materials	955	2	955	2
1 Month Non-fuel Consumables	199	0	175	0
1 Month Waste Disposal	0	0	0	0
25% of 1 Months Fuel Cost at 100% CF	0	0	0	0
2% of TPC	12,447	23	10,699	19
Total	18,661	34	16,891	31
Inventory Capital				
60 day supply of fuel and consumables at 100% CF	349	1	321	1
0.5% of TPC (spare parts)	3,112	6	2,675	5
Total	3,461	6	2,996	5
Initial Cost for Catalyst and Chemicals	796	1	760	1
Land	900	2	900	2
Other Owner's Costs	93,349	170	80,244	146
Financing Costs	16,803	31	14,444	26
Total Overnight Costs (TOC)	756,298	1,375	651,194	1,184
Total As-Spent Cost (TASC)	862,180	1,568	742,362	1,350

Exhibit 5-26 Case 2-3 Plant O&M cost

OPERATING & MAINTENANCE LABOR					Annual Cost $
Annual Operating Labor Cost	Number of Operators per Shift	7			2,762,159
Maintenance Labor Cost					5,336,492
Administrative & Support Labor					2,024,663
Property Taxes and Insurance					12,286,066
TOTAL FIXED OPERATING COSTS					**22,409,380**
VARIABLE OPERATING COSTS					
Maintenance Material Cost					10,310,102
Stack Replacement Cost					4,465,626
Subtotal					**14,775,728**
Consumables		Consumption	Unit	Initial	
	Initial Fill	/Day	Cost	Cost	
Water (/1000 gallons)	0	729	1.08	0	**259,036**
Chemicals					
MU & WT Chem. (lbs)	0	3,221	0.17	0	183,101
Natural Gas Desulfurization Sorbent (lbs)	36,235	952	5.00	181,177	1,563,131
ATR Reformer Catalyst (m3)	1,233	0.8	499.00	615,319	139,012
Subtotal Chemicals				**181,177**	**1,746,232**
TOTAL VARIABLE OPERATING COSTS				**796,496**	**16,920,008**
Fuel (MMBtu)			6.55		**149,660,486**

Exhibit 5-27 Case 2-3 Plant cost-of-electricity breakdown

First-year COE Component	$/MWh With CCS	$/MWh Without CCS
Capital charge	21.7	18.7
Fixed Operating	5.2	4.8
Variable Operating	3.9	3.7
Fuel	34.5	32.9
T&S	0	0.0
Total COE	65.3	60.0

Exhibit 5-28 Case 2-3 Plant COE sensitivity to NG price

Natural Gas Price ($/MMBtu)	COE ($/MWh) With CCS	COE ($/MWh) Without CCS
4.0	51.8	47.2
6.55	65.3	60.0
12.0	94.0	87.4

6 Pathway 3: SOFC with Internal Reforming

The Pathway 3 plant configuration is modified from Pathway 1, with the ATR being eliminated and the natural gas being fed directly to the SOFC unit. The SOFC stack is configured to contain appropriate catalytic reforming surfaces, arranged in such a way that the cooling of the stack, and the control of its temperature distribution through the cells result. This replacement has a large impact on all aspects of the plant design, the resulting plant performance, and the cost.

6.1 Case 3-1: Plant Description

Case 3-1 applies atmospheric-pressure SOFC operating, performance, and cost specifications representing the current status of the developing SOFC technology. The internal reforming of the natural gas promotes high plant efficiency and low cost.

With reference to the Exhibit 6-1 block flow diagram and the Exhibit 6-2 stream table, the Case 3-1 plant is described. Natural gas (Stream 1), delivered to the plant at 50 psia, comprises the SOFC fuel gas. While a Stream 2 steam flow is indicated in the diagram, none is used in the actual case, with recycled anode gas providing sufficient water vapor. There are eight parallel SOFC sections in the plant, each containing a single cathode heat exchanger, anode heat exchanger, cathode air blower, cathode recycle gas blower, and anode gas recycle blower.

A conventional ASU generates oxidant (99.5 percent pure) for the anode off-gas oxy-combustor (Stream 4). The ASU oxidant capacity is about 23 percent of the oxidant capacity of a conventional IGCC plant with CCS having the same plant net generating capacity as the Case 3-1 plant. A single ASU train is used.

The SOFC fuel gas stream is preheated through the anode heat exchanger and is mixed with recycled anode gas to achieve the anode inlet temperature (Stream 6). Air is boosted in pressure by the cathode air blower (Stream 8), is preheated through the cathode heat exchanger, and is mixed with recycled cathode gas to achieve the cathode inlet temperature (Stream 9). The cathode inlet gas provides the oxygen needed for the SOFC oxidation reactions, and provides cooling of the cells to maintain temperatures at an acceptable distribution. The cell cooling is aided greatly by the reforming of methane throughout the cells, reducing the required flow of cathode air.

The cathode off-gas passes through the cathode heat exchanger and is then vented (Stream 10). The anode off-gas (Stream 7) is combusted across the oxy-combustor, generating a hot combustion gas (Stream 11) having 1percent excess oxygen content. The HRSG raises high-pressure steam for the steam bottoming cycle, and low-pressure steam for the auxiliary processing needs.

The NGFC steam plant has a capacity of about 35 percent of that of a conventional IGCC plant with CCS having the same plant net generating capacity. The NGFC steam plant has a capacity of about 48 percent of that of a conventional NGCC plant with CCS having the same plant net generating capacity. A single train configuration of oxy-combustor, HRSG and steam power system is used in the plant.

The cooled combustion gas is dehydrated and compressed to 2215 psia to generate the plant's CO_2 product for sequestration (Stream 12). The CO_2 sequestration rate is at a capacity of about 35 percent of that of a conventional IGCC plant with CCS having the same plant net generating

capacity. The NGFC plant CO_2 sequestration rate is about 76 percent of that of a conventional NGCC plant with CCS having the same plant net generating capacity. Four parallel CO_2 compression trains are used in the Case 3-1 plant.

Exhibit 6-1 Case 3-1 Plant block flow diagram

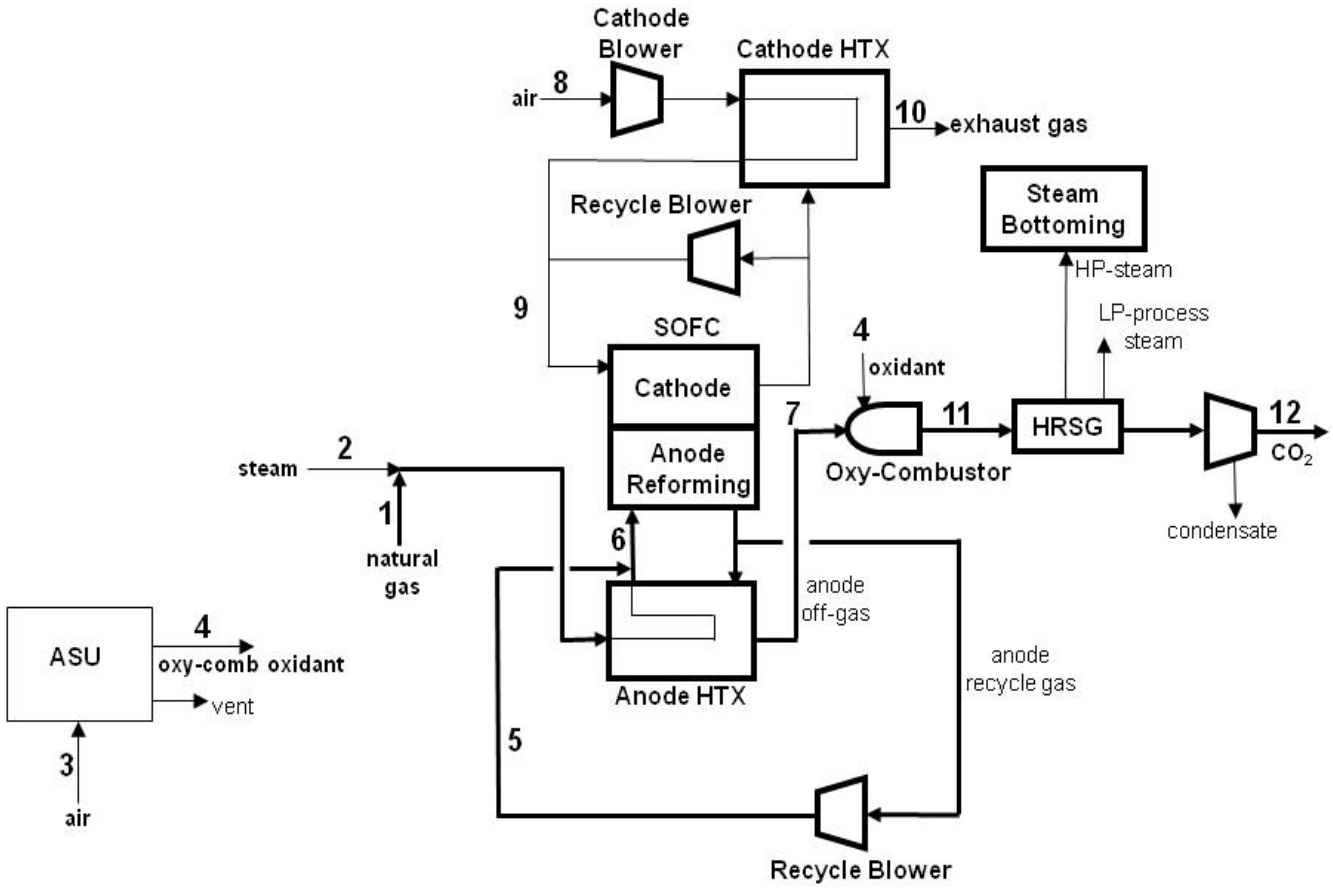

Exhibit 6-2 Case 3-1 Plant stream table

	1	2	3	4	5	6	7	8	9	10	11	12
V-L Mole Percent												
Ar	0.00	0.00	0.94	0.31	0.00	0.00	0.00	0.94	1.00	1.07	0.02	0.07
CH_4	93.10	0.00	0.00	0.00	0.00	13.04	0.00	0.00	0.00	0.00	0.00	0.00
CO	0.00	0.00	0.00	0.00	3.94	3.39	3.94	0.00	0.00	0.00	0.01	0.03
CO_2	1.00	0.00	0.03	0.00	30.07	26.00	30.07	0.03	0.03	0.03	33.64	95.53
H_2	0.00	0.00	0.00	0.00	9.37	8.05	9.37	0.00	0.00	0.00	0.01	0.02
H_2O	0.00	100.00	1.04	0.00	56.10	48.24	56.10	1.04	1.11	1.19	64.78	0.00
N_2	1.60	0.00	77.22	0.19	0.52	0.67	0.52	77.22	82.30	88.10	0.53	1.51
Ethane	3.20	0.00	0.00	0.00	0.00	0.45	0.00	0.00	0.00	0.00	0.00	0.00
Propane	0.70	0.00	0.00	0.00	0.00	0.10	0.00	0.00	0.00	0.00	0.00	0.00
N-Butane	0.40	0.00	0.00	0.00	0.00	0.06	0.00	0.00	0.00	0.00	0.00	0.00
O_2	0.00	0.00	20.77	99.50	0.00	0.00	0.00	20.77	15.56	9.61	1.00	2.84
Total	100.00	100.00	100.00	100.00	100.00	100.00	100.00	100.00	100.00	100.00	100.00	100.00
V-L Flowrate (kg_{mol}/hr)	3,423	0	3,987	807	21,007	24,430	10,488	50,772	95,277	44,504	10,598	3,729
V-L Flowrate (kg/hr)	59,312	0	115,041	25,823	520,544	579,856	259,882	1,465,022	2,729,474	1,264,452	285,705	161,888
Solids Flowrate (kg/hr)	0	0	0	0	0	0	0	0	0	0	0	0
Temperature (°C)	15	149	15	27	759	650	709	15	650	160	1,368	38
Pressure (MPa, abs)	0.34	0.34	0.10	0.16	0.11	0.11	0.11	0.10	0.11	0.11	0.10	15.27
Specific Enthalpy (kJ/kg)[A]	-4,500.0	-13,227.8	-101.7	1.1	-9,267.6	-8,747.5	-9,356.3	-101.7	569.2	32.8	-8,510.6	-8,869.7
Density (kg/m^3)	2.5	1.8	1.2	2.0	0.3	0.3	0.3	1.2	0.4	0.8	0.2	650.9
V-L Molecular Weight	17.328	18.015	28.855	32.016	24.779	23.735	24.779	28.855	28.648	28.412	26.959	43.411
V-L Flowrate (lb_{mol}/hr)	7,546	0	8,790	1,778	46,313	53,859	23,122	111,934	210,050	98,116	23,364	8,221
V-L Flowrate (lb/hr)	130,761	0	253,622	56,931	1,147,603	1,278,365	572,941	3,229,824	6,017,465	2,787,641	629,872	356,902
Solids Flowrate (lb/hr)	0	0	0	0	0	0	0	0	0	0	0	0
Temperature (°F)	59	300	59	80	1,399	1,202	1,308	59	1,202	319	2,495	100
Pressure (psia)	50.0	50	14.7	23	16.2	16.2	15.4	14.7	15.8	15.4	14.8	2215
Specific Enthalpy (Btu/lb)[A]	-1,934.6	-5,686.9	-43.7	0.5	-3,984.4	-3,760.8	-4,022.5	-43.7	244.7	14.1	-3,658.9	-3,813.3
Density (lb/ft^3)	0.157	0.113	0.076	0.127	0.020	0.022	0.020	0.076	0.025	0.052	0.013	40.633

6.2 Case 3-1: Plant Performance

The Case 3-1 plant power summary is shown in Exhibit 6-3. The dominant power generator in the plant is the SOFC system. The steam bottoming cycle generates a relatively small amount of power, about 12 percent of the plant's gross output. The dominant auxiliary loads in the plant are the CO_2 compression, the ASU air compression, and the cathode air and recycle gas blowers. The plant efficiency is 65.9 percent (HHV). The total plant auxiliary power is only 6.8 percent of the gross generating capacity of the plant.

Exhibit 6-4 provides more perspective on the stream flows though the plant. All mass flows are indicated in this simplified process schematic relative to the total natural gas feed rate. Pressures are also indicated for some key streams. The mass flows around the ASU are small compared to the mass flows around the SOFC system. The cathode-side flows are very large relative to the natural gas flow, being as much as 25 times the natural gas flow. The CO_2 product stream flow is 2.7 times the natural gas flow.

Likewise, Exhibit 6-5 provides perspective on the energy stream flows within the Case 3-1 plant. It shows the major fuel-stream flows relative to the natural gas feed stream fuel-energy content. The diagram also indicates component auxiliary power, temperatures of some key streams, and heat transfer duties of the major plant heat exchanger units.

100 percent of the natural gas feed stream fuel-energy passes to the SOFC system in the anode gas feed stream. Because of the plant operates with 90 percent SOFC total fuel utilization, 12.8 percent of the natural gas feed fuel-energy passes on to the oxy-combustor. The cathode heat exchanger has a high duty at 26 percent of the total natural gas fuel-energy content. Recycling of cathode gas significantly reduces the size and cost of this heat exchanger.

The SOFC voltage is indicated on the diagram as being 0.83 volts. The Nernst potential at the anode outlet condition is 0.87 volts, at the anode inlet condition is 0.90 volts, and the average Nernst is 0.88 volts.

Exhibit 6-6 and Exhibit 6-7 tabulate the HP- and LP-steam balances for the plant. The oxy-combustor HRSG generates all of the HP- and LP-steam requirements for the plant.

Exhibit 6-8 shows the overall water balances for Case 3-1. Cooling tower makeup is the dominant water demand in the plant. The recovery of condensate from the CO_2 exit stream and the high plant efficiency result in relatively small water consumption.

The carbon balance for the plant is shown in Exhibit 6-9 for Case 3-1. The only carbon input to the plant consists of carbon in the natural gas. About 99.9 percent of the natural gas carbon content is captured in the CO_2 sequestration stream.

Air emissions, in Exhibit 6-10, are nearly zero for Case 3-1 because all of the controlled species remaining in the very clean syngas are co-sequestered with the CO_2 product. The only CO_2 emission is from vented exhaust streams from condensate processing, with the total carbon removal exceeding 99 percent. The NOx emitted by the anode off-gas oxy-combustor will be inherently low and is assumed to meet CO_2 sequestration requirements.

Exhibit 6-3 Case 3-1 Plant power summary (100 percent load)

POWER SUMMARY	
GROSS POWER GENERATED, kWe	
SOFC Power	529,196
Natural Gas Expander Power	0
Steam Turbine Power	61,131
TOTAL POWER, kWe	**590,327**
AUXILIARY LOAD SUMMARY, kWe	
ASU Auxiliary power	137
ASU air compressor	6,357
Anode recycle compressor	2,599
CO_2 compressor	18,849
BFW pump	970
Condensate pump	65
Circulating water pump	1,072
Cooling tower fans	882
ST auxiliaries	20
Cathode air blower	3,366
Cathode recycle blower	3,407
BOP	383
Transformer losses	2,220
TOTAL AUXILIARIES, kWe	**40,327**
NET POWER, kWe	**550,000**
Net Plant Efficiency, % (HHV)	65.9
Net Plant Heat Rate, kJ/kWh (Btu/kWh)	5,466 (5,181)
CONDENSER COOLING DUTY 10^6 kJ/h (10^6 Btu/h)	344 (326)
CONSUMABLES	
Natural Gas Feed, kg/h (lb/h)	57,452 (126,661)
Thermal Input[1], kWt	835,098
Raw Water Consumption, m^3/min (gpm)	2.8 (731)

Exhibit 6-4 Case 3-1 Plant mass flow diagram

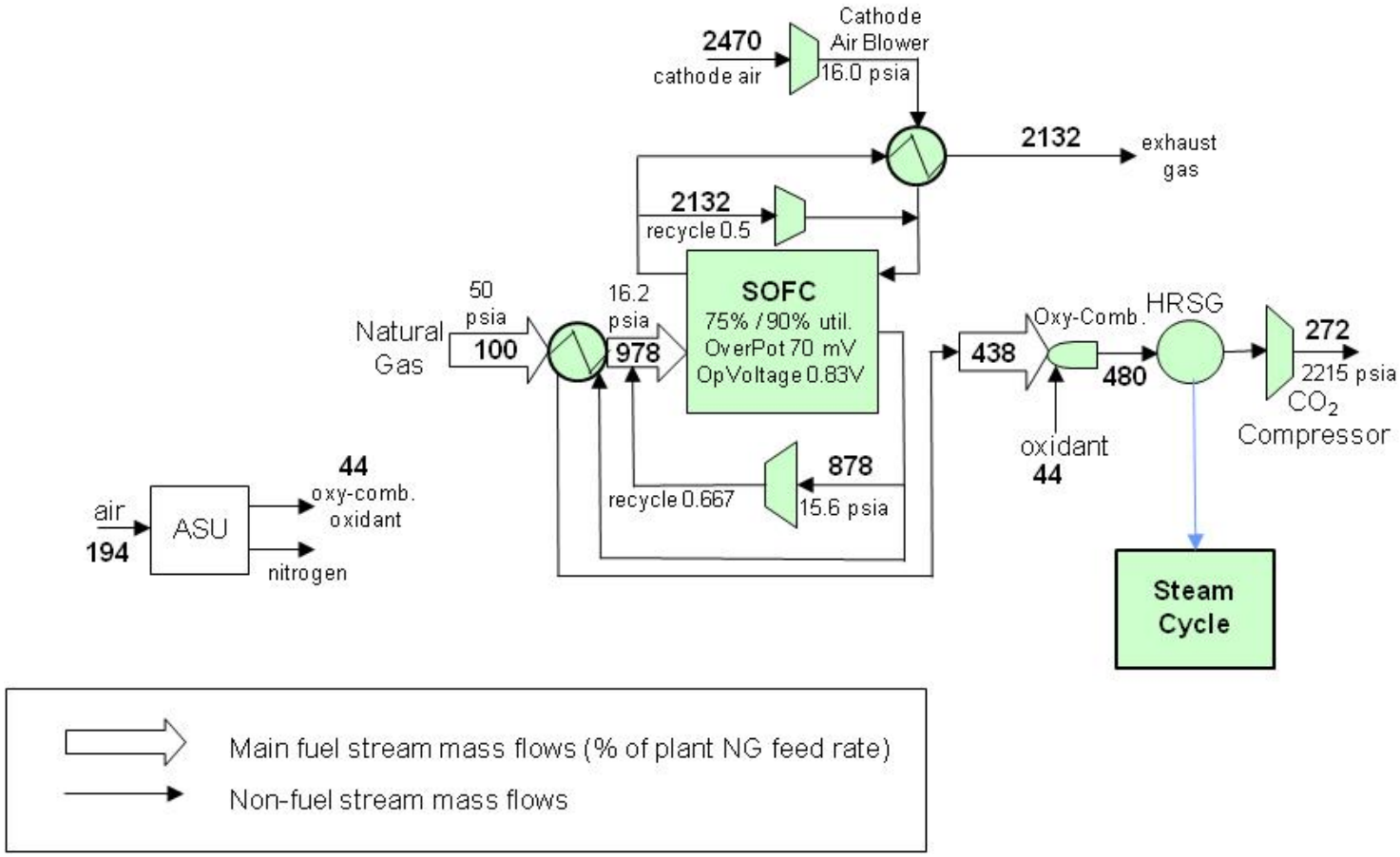

Exhibit 6-5 Case 3-1 Plant energy flow diagram

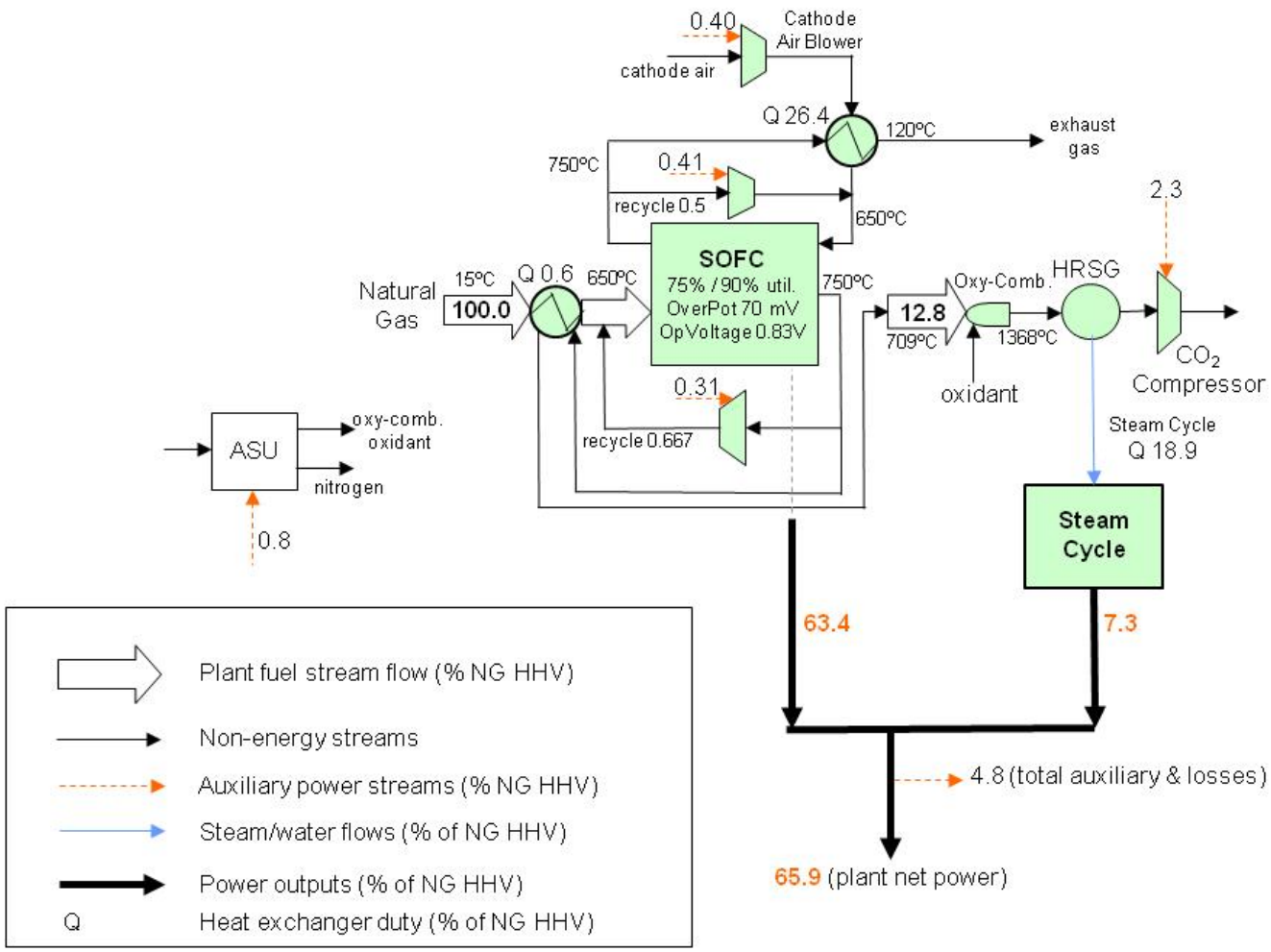

Exhibit 6-6 Case 3-1 Plant high-pressure steam balance

HP Process Steam Use, kg/hr (lb/hr)		HP Process Steam Generation, kg/hr (lb/hr)	
Reformer feed	0 (0)	**Oxy-combustor heat**	0 (0)
Total	0 (0)	**Total**	0 (0)
HP Power-Steam generation, GJ/hr (MMBtu/hr)			
Oxy-combustor HRSG	568 (538)		
Total	568 (538)		

Exhibit 6-7 Case 3-1 Plant low-pressure steam balance

LP Process Steam Use, GJ/hr (MMBtu/hr)		LP Process Steam Generation, GJ/hr (MMBtu/hr)	
ASU	10 (9)	**Oxy-combustor HRSG**	10 (9)
Total	10 (9)	**Total**	10 (9)

Exhibit 6-8 Case 3-1 Plant water balance

	m^3/min (gpm)
Water Demand	**6.11 (1,614)**
Condenser Makeup *Reformer Steam* *BFW Makeup*	0.05(14) *0.0 (0)* *0.05 (14)*
Cooling Tower Makeup	6.05 (1,599)
Water Recovery for Reuse	**2.00 (528)**
CO_2 Dehydration	2.00 (528)
Process Discharge Water	**1.54 (407)**
Cooling Tower Water Blowdown	1.36 (360)
CO_2 Dehydration	0.18 (48)
Raw Water Consumed	**2.77 (731)**

Exhibit 6-9 Case 3-1 Plant carbon balance

Carbon In, kg/hr (lb/hr)		Carbon Out, kg/hr (lb/hr)	
Natural Gas	41,497 (91,484)	**Exhaust Gas**	43 (94)
		CO_2 Product	41,454 (91,390)
Total	41,497 (91,484)	**Total**	41,497 (91,484)

Exhibit 6-10 Case 3-1 Plant air emissions

	kg/GJ (lb/10^6 Btu)	Tonne/year (tons/year) 80% capacity factor	kg/MWh (lb/MWh)
NO_X	0 (0)	0 (0)	0 (0)
CO_2	0.05 (0.12)	1,099 (1,212)	0.29 (0.63)

6.3 Case 3-1: Plant Cost Results

The cost of the SOFC cell structure with reforming surfaces incorporated in not known, since the configuration has not been under developed for vendor projections. The maximum acceptable investment for the cells with internal reforming surfaces can be estimated so that the COE for Case 3-1 is the same as that for comparable Case 1-7, with this case having all other SOFC specifications being the same as Case 3-1. A maximum stack cost of 447 $/kW SOFC AC output results, compared to the current stack cost of 296 $/kW SOFC AC output. This means there is a large margin available for the stack cost with internal reforming surface incorporated and pursuing the development of this configuration is merited. The minimum FY-COE for Case 3-1, for the limiting situation where the stack cost (advanced cost equals 268 $/kW SOFC AC output) is not increased by the addition of the internal reforming surfaces, is 58.0 $/kWh.

The cost of the SOFC stack with NGFC using internal reforming could be as high as 1,200 $/kW SOFC AC output for the FY-COE to equal that of the reference NGCC with CCS FY-COE. This is a factor of four times the estimated base SOFC stack cost without catalyst surface.

For the purposes of sensitivity calculations, it is assumed that the stack cost with incorporated catalyst structures is 390 $/kW SOFC output, representing a cost adder of 94 $/kW SOFC output for the catalyst structures above the current SOFC stack cost of 296 $/kW SOFC output.

7 References

1. National Energy Technology Laboratory (NETL). (2010). Cost and Performance Baseline for Fossil Energy Plants, Volume 1: Bituminous Coal and Natural Gas to Electricity. DOE/NETL-2010/1397. Pittsburgh, Pennsylvania.

2. National Energy Technology Laboratory (NETL). (2011). Analysis of Natural Gas Fuel Cell Plant Configurations. DOE/NETL 2011-1486. Pittsburgh, Pennsylvania.

3. National Energy Technology Laboratory (NETL). (2011). Analysis of Integrated Gasification Fuel Cell Plant Configurations. DOE/NETL 2011-1482. Pittsburgh, Pennsylvania.

4. EG&G Technical Services. (2004). Seventh Edition Fuel Cell Handbook. Available for download at http://www.osti.gov/bridge/purl.cover.jsp?purl=/834188/834188.pdf

5. Foster-Pegg, R.W. (1978). Steam Bottoming Plants for Combined Cycles. April 1978, *Engineering for Power, 100* (2), pp. 203-211.

6. Udesen, H. (2006). Advantages of Large Capacity Plants Producing a Variety of Products. Presented at 19th AFA Int'l Fertilizer Technical Conference & Exhibition. Daha-Qatar

7. Sundset T., J. Sogge, and T. Strom. (1994). Evaluation of Natural Gas Based Synthesis Gas Production Technologies. *Catalysts Today, 21*, pp. 269-278.

8. G.O. Alptekin. (2004). Sorbents for Desulfurization of natural Gas, LPG and Transportations Fuels. Presented at Sixth Annual SECA Workshop, April 2004. Pacific Grove, California.

9. National Energy Technology Laboratory (NETL). (2006). Power Systems Financial Model Version 5.0.

10. Ghezel-Ayagh, H. (2009). Solid Oxide Fuel Cell Program at Fuel Cell Energy Inc. Presented at the 10th Annual SECA Workshop. Pittsburgh, Pennsylvania.

11. Ghezel-Ayagh, H. (2010).Coal-Based SECA Program - Fuel Cell Energy Inc. Presented at the 11th Annual SECA Workshop. Pittsburgh, Pennsylvania.

12. Thijssen,J.H., J. Thijssen, and W. A. Surdoval. (2009). Stack Operating Strategies for Central Station SOFC. Presented at the 2009 Fuel Cell Seminar, Palm Springs, California.

13. J.C. Hensley (editor). (1985). Cooling Tower Fundamentals. The Marley Cooling Tower Company. Mission, Kansas.

14. Agrawal, G. (2009). Advances in Fuel Cell Blowers. Presented at the 10th Annual SECA Workshop, Pittsburgh, Pennsylvania.

Walter Shelton
walter.shelton@netl.doe.gov

Dale Keairns
dale.keairns@contr.netl.doe.gov

www.netl.doe.gov

Pittsburgh, PA • Morgantown, WV • Albany, OR • Sugar Land, TX • Anchorage, AK

(800) 553-7681