Fossil Energy Power Plant Desk Reference

DOE/NETL-2007/1282

Bituminous Coal and Natural Gas to Electricity Summary Sheets

May 2007

This page intentionally left blank

Disclaimer

This report was prepared as an account of work sponsored by an agency of the United States Government. Neither the United States Government nor any agency thereof, nor any of their employees, makes any warranty, express or implied, or assumes any legal liability or responsibility for the accuracy, completeness, or usefulness of any information, apparatus, product, or process disclosed, or represents that its use would not infringe privately owned rights. Reference therein to any specific commercial product, process, or service by trade name, trademark, manufacturer, or otherwise does not necessarily constitute or imply its endorsement, recommendation, or favoring by the United States Government or any agency thereof. The views and opinions of authors expressed therein do not necessarily state or reflect those of the United States Government or any agency thereof.

This page intentionally left blank

Fossil Energy Power Plant Desk Reference

DOE/NETL-2007/1282

May 2007

NETL Contact:

Julianne M. Klara
Senior Analyst
Office of Systems, Analysis and Planning

National Energy Technology Laboratory
www.netl.doe.gov

This page intentionally left blank

Preface

The goal of Fossil Energy (FE) research, development, and demonstration (RD&D) is to ensure the availability of ultra-clean, abundant, low-cost, domestic electricity to fuel economic prosperity and strengthen energy security. A broad portfolio of technologies is being developed within the Clean Coal Program to accomplish this objective. Ever increasing technological enhancements are in various stages of the research "pipeline," and multiple paths are being pursued to create a portfolio of promising technologies for RD&D and eventual deployment.

To benchmark the progress of Clean Coal RD&D, it is essential to establish a baseline for comparing the performance of today's fossil energy plant technologies: Pulverized Coal (PC) Combustion, Integrated Gasification Combined Cycle (IGCC), and Natural Gas Combined Cycle (NGCC). NETL commissioned an in-depth analysis to estimate the performance and cost of state-of-the-art power plants taking into account the technological progress in recent years as well as dramatic escalation in labor and material costs. This desk reference provides a brief summary of the performance and cost estimates presented in the report titled, "Cost and Performance Baselines for Fossil Energy Plants, Vol. 1, DOE/NETL-2007/1281." The plants use either bituminous coal or natural gas to generate electricity using technology that is available today or within the next couple of years for a planned start-up in 2010. All cases analyzed in the study were also designed with CO_2 capture, so that the cost and performance penalties could be estimated and benchmarked. This desk reference summarizes the results at the three levels listed below, allowing the user to drill down to the level of detail desired.

Overview

A top-level overview is provided of all three technologies, with and without CO_2 capture.

Technology-Level

The technology-level summaries drill down one level, to compare like-technologies both with and without CO_2 capture:

- IGCC Technology *(GE Energy, ConocoPhillips E-Gas, Shell)*
- PC Combustion Technology *(sub- and super-critical)*
- NGCC Technology

Plant-Level

Plant-level summary sheets drill down an additional level, to describe each case in terms of the technical, economic, and environmental design basis. A plant description is outlined in some detail for each case, including mass and heat balance, efficiency, capital and operating costs, cost-of-electricity (COE), and cost of avoided CO_2 (if capture is included).

Acknowledgements

The author wishes to acknowledge the contributions of many individuals that have made this desk reference possible.

- Thanks to the technical and cost expertise provided by RDS, LLC that developed the mass & energy balances and cost estimates that serve as the basis for this publication.

Pamela Capicotto
John Haslbeck
Norma Kuehn
Michael Matuszewski
Lora Pinkerton
Michael Rutkowski
Ronald Schoff
Vladimir Vaysman
Mark Woods

- Thanks to the staff at TMS, Inc. for preparing the summary sheets and making the desk reference a reality.

Lynn Billanti
William Ellis
Pete Herz
Doug Tanner
Teresa Miller Tucker
Debi Turnell
Chester Wagstaff
Robert Williams

- Thanks to the following NETL staff for their contributions and guidance on this effort. The resulting product has been made better with the benefit of their feedback.

Jared Ciferno
Jeff Hoffmann
Robert James
Patrick Le
Michael Matuszewski
Larry Rath
Michael Reed
Gary Stiegel
John Wimer

Fossil Energy Power Plant
Desk Reference
Bituminous Coal and Natural Gas to Electricity

Table of Contents

Tab

Bituminous Overview

Integrated Gasification Combined-Cycle (IGCC) Technology

IGCC Plant Cases

Contents:

- GE Energy IGCC Plant
- GE Energy IGCC Plant with CCS
- ConocoPhillips E-Gas IGCC Plant
- ConocoPhillips E-Gas IGCC Plant with CCS
- Shell IGCC Plant
- Shell IGCC Plant with CCS

Pulverized Coal (PC) Technology

PC Plant Cases

Contents:

- Subcritical PC plant
- Subcritical PC plant with CCS
- Supercritical PC plant
- Supercritical PC plant with CCS

Natural Gas Combined-Cycle (NGCC) Technology

NGCC Plant Cases

Contents:

- NGCC plant
- NGCC plant with CCS

This page intentionally left blank

Overview of Bituminous Baseline Study

Objective and Description

The objective of the *Cost and Performance Baseline for Fossil Energy Plants; Volume 1 (Bituminous Coal and Natural Gas to Electricity)* is to determine cost and performance estimates of the near-term commercial offerings for power plants, both with and without current technology for carbon capture and sequestration (CCS). The study uses consistent design requirements for all technologies examined, as well as up-to-date performance and capital cost estimates. The study timeframe focuses on plants built now and commissioned in 2010. Each plant is built at a greenfield site in the midwestern United States.

The fossil energy plant cost and performance estimates presented in the study can be used as a baseline for additional comparisons and analyses. These systems analyses are a critical element of planning and guiding Federal Fossil Energy research, development, and demonstration.

Twelve different power plant configurations are analyzed in the Bituminous Baseline Study. These six configurations include integrated gasification combined-cycle (IGCC) cases utilizing General Electric Energy (GEE), ConocoPhillips (CoP), and Shell gasifiers; four pulverized coal (PC) cases, two subcritical and two supercritical, and two natural gas combined-cycle (NGCC) plants. Each configuration was analyzed with and without CCS. The study matrix is provided in Table 1.

Table 1. Study Matrix

Plant Type	Standard Conditions (psig/°F/°F)	Gas Turbine	Gasifier / Boiler	Acid Gas Removal / CO_2 Separation / Sulfur Recovery	CO_2 Capture (%)
IGCC	1,800/1,050/1,050	F-Class	GEE	Selexol/ - /Claus	–
			CoP	MDEA/ - /Claus	–
			Shell	Sulfinol-M/ - /Claus	–
	1,800/1,000/1,000		GEE	Selexol/Selexol/Claus	90
			CoP	Selexol/Selexol/Claus	88
			Shell	Selexol/Selexol/Claus	90
PC	2,400/1,050/1,050	–	Subcritical	Wet flue gas desulfurization (FGD)/ - /Gypsum	–
				Wet FGD/Econamine/Gypsum	90
	3,500/1,100/1,100		Supercritical	Wet FGD/ - /Gypsum	–
				Wet FGD/Econamine/Gypsum	90
NGCC	2,400/1,050/950	F-Class	Heat recovery steam generators	–	–
				- /Econamine/ -	90

Assumptions

Technical

The IGCC cases are dual-train gasification systems. Once the syngas is cleaned of acid gases and other contaminants, it is fed to two advanced F-Class combustion turbines (232 MWe gross output each) coupled with two heat recovery steam generators (HRSGs) and a single steam turbine to generate roughly 750 MWe gross plant output (about 630 MWe, net). The CCS cases require a water-gas-shift (WGS) and a two-stage Selexol system to capture the carbon dioxide (CO_2), as well as compressors to raise the CO_2 to the pipeline requirements of 15.3 MPa (2,215 psia). These CCS systems require a significant amount of extraction steam and auxiliary power, which reduces the output of the steam turbine and reduces the net plant power to about 520 MWe. Because the IGCC system is constrained by the discrete F-Class turbine size, the system cannot be scaled to increase the net output to match that of the cases without CCS.

All four PC cases employ a one-on-one configuration comprising a state-of-the-art PC steam generator and steam turbine. The boiler is a dry-bottom, wall-fired unit that employs low-nitrogen oxides (NOx) burners with over-fire air and selective catalytic reduction for NOx control, a wet-limestone, forced-oxidation scrubber for sulfur dioxide (SO_2) and mercury (Hg) control, and a fabric filter for particulate matter (PM) control. In the cases with CCS, the PC plant is equipped with the Econamine FG Plus™ process. The coal feed rate is increased in the CCS cases to increase the gross steam turbine output and account for the higher auxiliary load of carbon capture and compression. The ability of the boiler and steam turbine industry to match unit size to a custom specification has been commercially demonstrated, enabling a common net output of 550 MWe for the PC cases in this study.

Table 2. Coal Analysis

Rank	Bituminous	
Seam	Illinois No. 6 (Herrin)	
Source	Old Ben Mine	
Proximate Analysis (weight %)[1]		
	As Received	Dry
Moisture	11.12	0.00
Ash	9.70	10.91
Volatile matter	34.99	39.37
Fixed carbon	44.19	49.72
Total	100.00	100.00
Sulfur	2.51	2.82
Higher heating value, Btu/lb	11,666	13,126
Lower heating value, Btu/lb	11,252	12,712

[1]The above proximate analysis assumes sulfur as a volatile matter.

Both the IGCC and PC cases utilize Illinois No. 6 bituminous coal. An analysis of the coal used is provided in Table 2.

The NGCC cases use two F-Class turbines, each generating a gross 185 MWe. The two turbines are coupled with two HRSGs and one steam turbine generator in a multi-shaft 2x2x1 configuration. For the CCS cases, CO_2 is removed in an Econamine FG Plus™ process that imposes a significant auxiliary power load on the system and requires significant extraction steam, reducing the steam turbine power output. Similar to the IGCC cases, the NGCC cases are constrained by the combustion turbine size. The NGCC cases have a total net power output of 560 MWe without CCS and 482 MWe with CCS. In all CCS cases, the compressed CO_2 is transported 50 miles via pipeline to a geologic sequestration field for injection into a saline aquifer. In addition to transport and storage, the CO_2 is monitored for 80-years.

Table 3. Environmental Targets

Pollutant	IGCC	PC	NGCC
SO_2	0.0128 lb/MMBtu	0.085 lb/ MMBtu	Negligible
NOx	15 ppmvd @ 15% Oxygen	0.07 lb/MMBtu	2.5 ppmvd @ 15% Oxygen
PM (filterable)	0.0071 lb/MMBtu	0.013 lb/ MMBtu	Negligible
Hg	> 90% capture	1.14 lb/TBtu	N/A

Environmental

The environmental approach for the study was to choose environmental targets for each technology that meet or exceed regulatory requirements. The IGCC targets were chosen to match the design basis of the Electric Power Research Institute for their *CoalFleet for Tomorrow Initiative*. Best Available Control Technology was applied to each of the PC and NGCC cases, and the resulting emissions were compared to 2006 New Source Performance Standards limits and recent permit averages.

Table 4. Major Economic Assumptions

Startup date	2010
Cost year (U.S. dollars)	2007
Coal cost ($/MMBtu)	1.80
Natural gas cost ($/MMBtu)	6.75
Capacity factor (%)	
IGCC	80
PC/NGCC	85
Capital charge factor (%):	
High risk (All IGCC PC/ NGCC with CO_2 capture)	17.5
Low risk (PC/NGCC without CO_2 capture)	16.4
Plant life (years)	30

Economic

The total plant cost (TPC) for each technology was determined through a combination of vendor quotes, scaled estimates from previous design/build projects, or a combination of the two. Total plant cost includes all equipment (complete with initial chemical and catalyst loadings), materials, labor (direct and indirect), engineering and construction management, and contingencies (process and project). Owner's costs are not included.

The cost estimates carry an accuracy of ±30 percent, consistent with the screening study level of design engineering applied to the various cases in this study. All cases were evaluated under the same set of technical and economic assumptions allowing meaningful comparisons among the cases evaluated.

Table 4 lists the major economic assumptions. In this study, dual trains were used only when equipment capacity required an additional train, and no redundancy was employed other than normal sparing of rotating equipment.

For those cases that feature CCS, capital and operating costs were estimated for CO_2 transport, storage, and monitoring. These costs were then levelized over a 20-year period.

This study assumes that each new plant would be dispatched at the time it becomes available and would be capable of generating maximum capacity when online. Therefore, capacity factor (CF) is assumed to equal availability. The CF is 80 percent for IGCC cases and 85 percent for both PC and NGCC cases.

Figure 1. Plant Efficiency

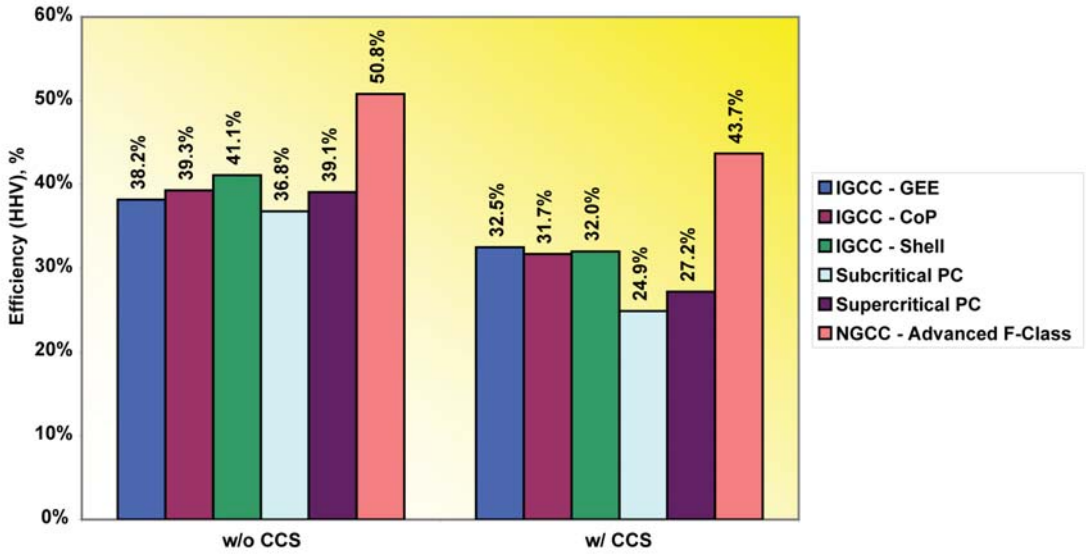

Results

Technical

For cases without CCS, the energy efficiency of NGCC is on the order of 50 percent (higher heating value, HHV basis); followed by supercritical PC and IGCC, both about 40 percent (HHV basis); and subcritical PC, with an efficiency of about 37 percent (HHV basis). Figure 1 shows the relative energy efficiency of each technology case.

With CCS, the energy penalty is 12 percentage points for PC plants, 7 percentage points for NGCC, and 6-9 percentage points for IGCC. Even with CCS, NGCC still maintains the highest efficiency of the plants evaluated at over 40 percent (HHV basis). The significant energy penalty for the PC plants reduces the efficiency to about 26 percent (HHV basis). IGCC has an efficiency advantage over PC in the CCS cases primarily because the CO_2 is more concentrated in IGCC syngas than in PC flue gas, thus requiring less energy to capture. The efficiency of the IGCC plants with CCS is about 32 percent (HHV basis).

Figure 2. SO_2, NOx, and PM Emissions

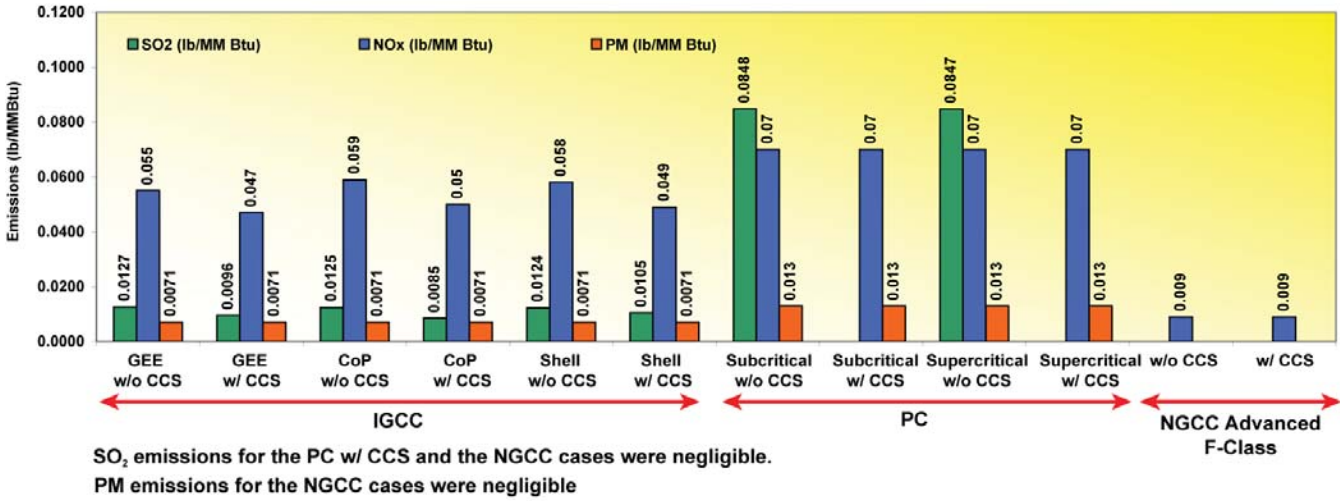

Environmental

All cases meet or exceed the environmental requirements set forth in the study design basis. The NGCC systems are the cleanest types of fossil power plants due to the low sulfur content and lower carbon-to-hydrogen ratio of the methane fuel. IGCC plants are the cleanest coal-based systems, with significantly lower levels of criteria pollutants than the PC plants. Figure 2 compares the results for these pollutant emissions for the various technology cases.

All CCS cases were required to remove 90 percent of the carbon present in the syngas. Due to a higher methane content of the syngas in the CoP case, carbon capture was 88.4 percent. NGCC plants produce 40 percent less CO_2 than the coal-based systems. The uncontrolled coal-based systems emitted as much as 203 lb/MMBtu of CO_2, but with CCS, emissions were reduced to about 20 lb/MMBtu. Figure 3 compares the results for CO_2 emissions for the various technology cases.

All cases were required to control Hg emissions. The environmental target for Hg removal is greater than 90 percent capture for IGCC plants and an emission rate of 1.14 lb/TBtu for PC plants. Figure 4 depicts the Hg emissions results for each case.

Water usage among the plants without CCS is lowest in the NGCC cases. The IGCC plants use about one-and-a-half times as much water as do the NGCC cases, and the PC cases use more than twice the amount of water.

Figure 3. CO_2 Emissions

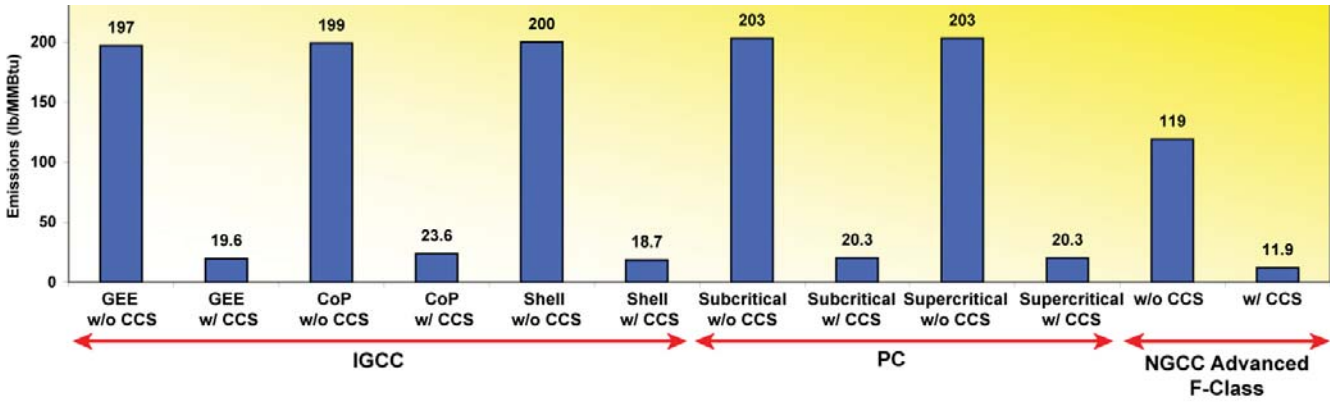

Figure 4. Mercury Emissions

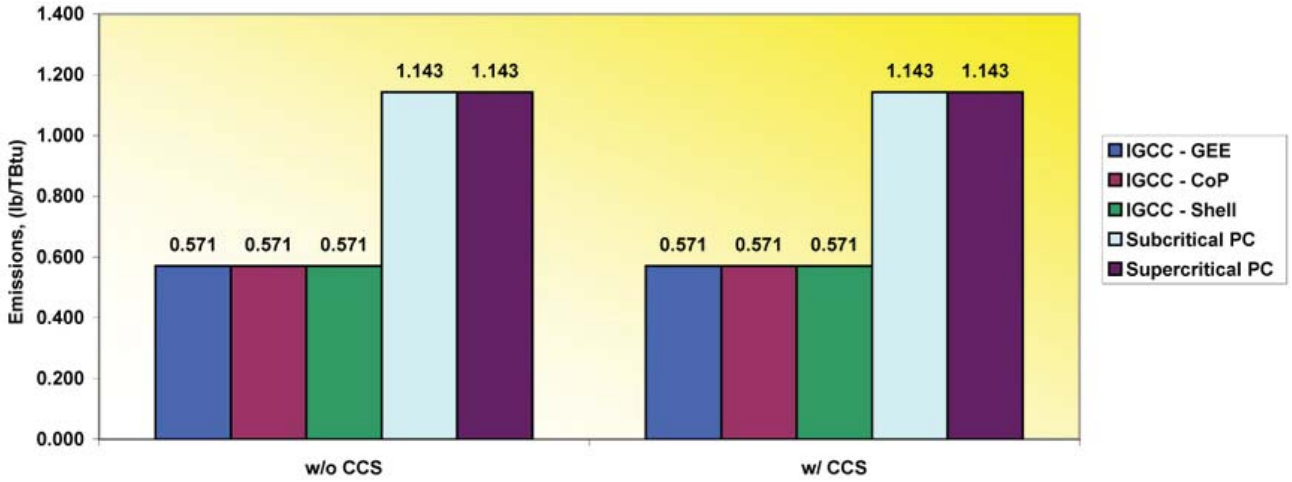

Emissions for the NGCC cases were listed in the report as "Negligible."

Figure 5. Plant Raw Water Usage

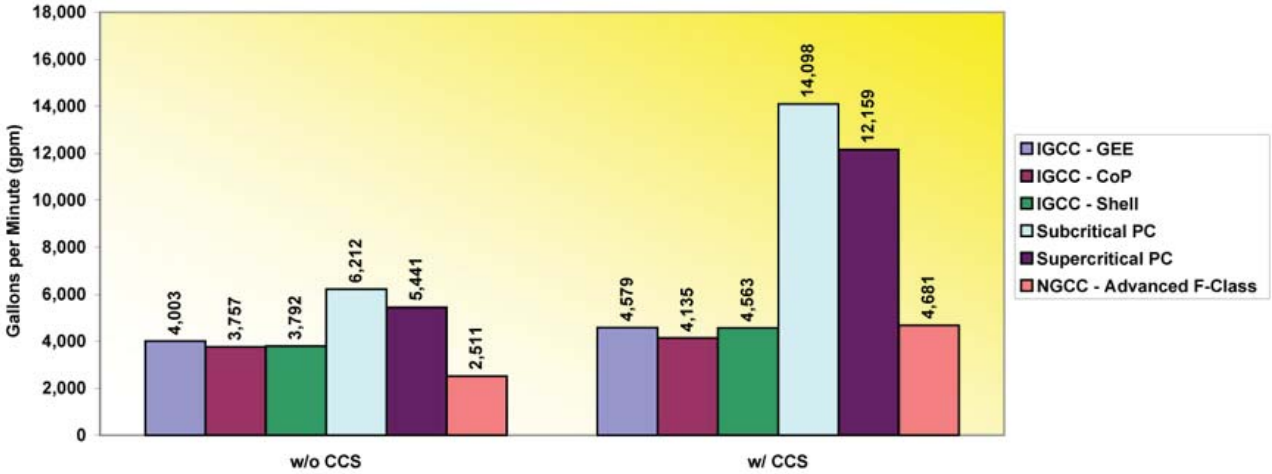

In all CCS cases, water usage increases. Water usage for IGCC cases is similar to an NGCC with CCS, whereas the PC case with CCS plants requires three to four times more water. Figure 5 shows the respective water usage rates for each technology case.

Economic

The coal-based plants have a much higher TPC than NGCC, both with and without CCS. For IGCC, the TPC is about $1,800/kWe, varying somewhat based on the gasifier type. This is about 20 percent higher than the TPC for a PC supercritical plant, which is about $1,500/kWe.

With CCS, the TPC for NGCC and PC plants ($/kW) increases by about 110 and 85 percent respectively. The TPC for the IGCC plant increases by around 35 percent. The NGCC plant capital requirement is over $1,000/kWe, while the IGCC plants cost approximately $2,400 to $2,600/kWe, and the PC plants cost over $2,800/kWe. Figure 6 shows the TPC for each technology case.

Figure 6. Plant Capital Requirements

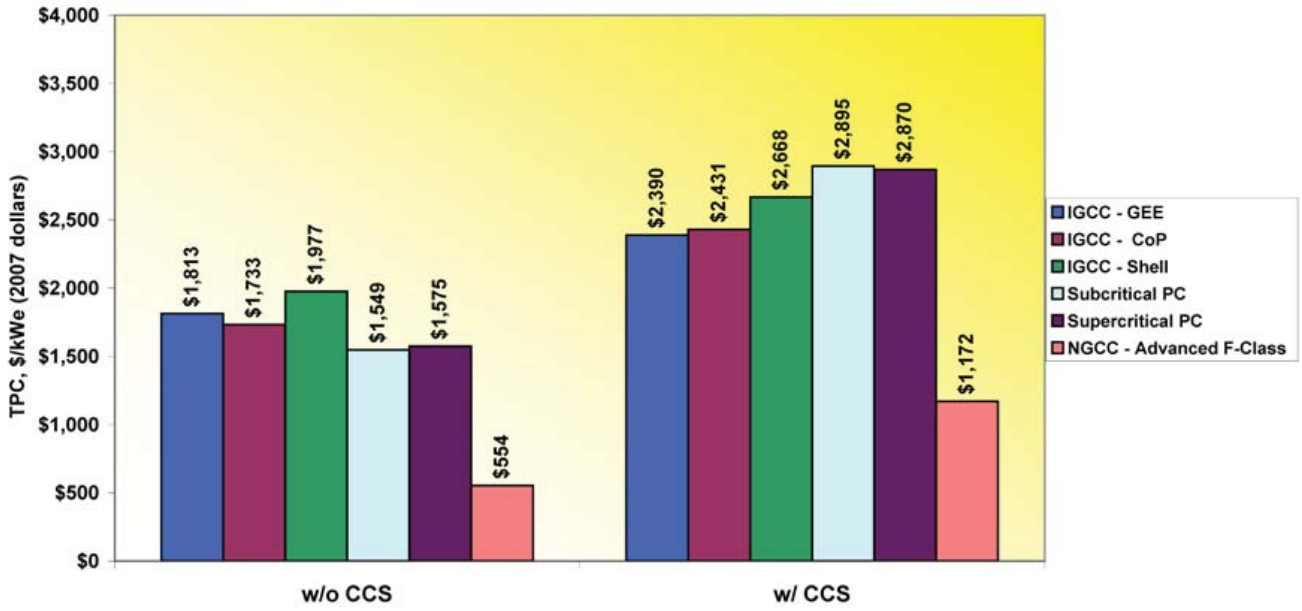

Cost-of-electricity (COE), which accounts for both efficiency and capital cost, is levelized over a 20-year period and expressed in mills/kWh (one mill is one-tenth of a cent). The electricity cost for cases without CCS ranges from about 63 mills/kWh for PC to 68.4 mills/kWh for NGCC and an average of 77.9 mills/kWh for IGCC.

With CCS, IGCC is the least expensive coal-based option for CO_2 removal with a levelized cost-of-electricity (LCOE) ranging from 102.9 mills/kWh to 110.4 mills/kWh. This is about 9 percent lower than PC plants equipped with CCS, which generate electricity at a cost of 114.8 mills/kWh to 118.8 mills/kWh. Figure 7 breaks out the LCOE costs for each technology case.

The cost of CO_2 avoided was calculated for each CCS case and is shown in Figure 8. On an avoided cost of CO_2 basis, IGCC is the least expensive option overall ($32–$42/ton) while NGCC is the most expensive option ($83/ton).

Figure 9 illustrates that at near 80 percent CF, the LCOE for PC cases is less than the LCOE for NGCC cases. With increased CF, the gap in LCOE between IGCC cases and other technologies narrows. For cases with CCS, even at higher CFs, the PC LCOE always for PC cases remains the highest.

Figure 7. Levelized Cost-of-Electricity

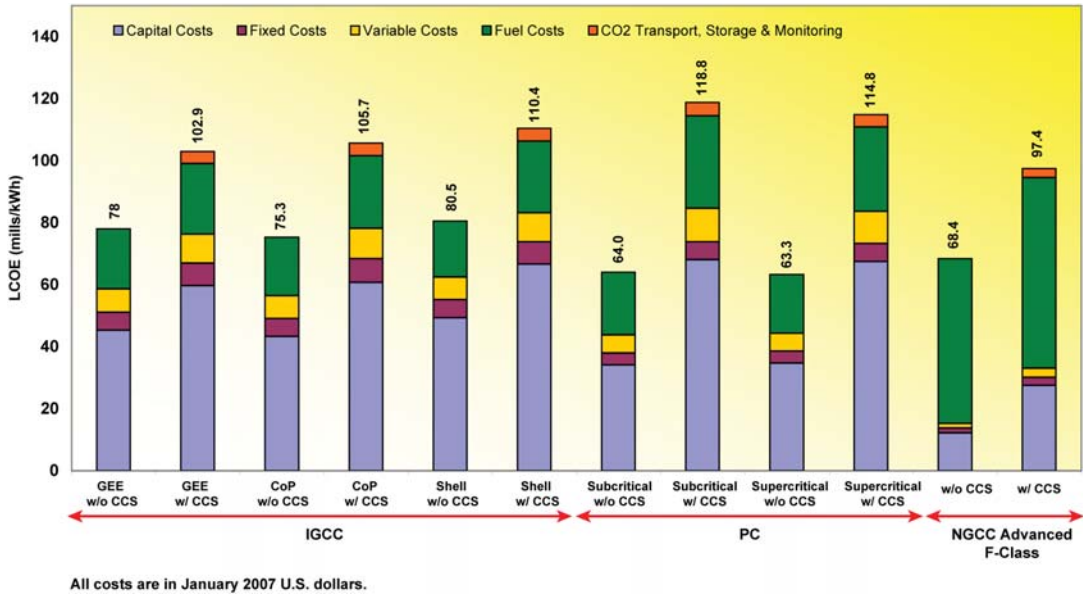

The LCOE sensitivity to fuel costs for the cases with and without CCS is shown in Figure 10. The solid line is the LCOE of NGCC without CCS as a function of natural gas cost. The dashed line is the LCOE of NGCC with CCS as a function of natural gas cost. The points on the lines represent the natural gas cost that would be required to make the LCOE of NGCC equal to the respective PC or IGCC technologies at a given coal cost.

Figure 8. Cost of CO_2 Avoided

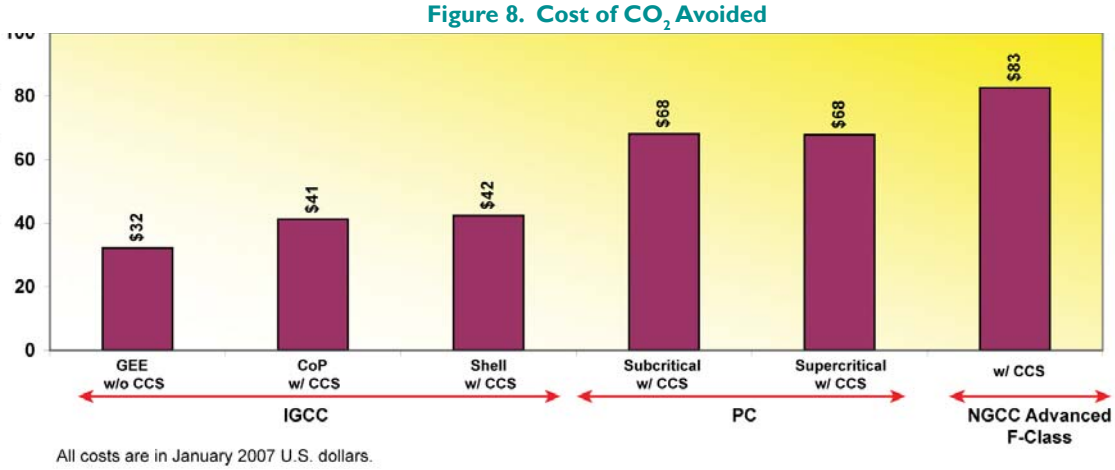

The coal prices shown ($1.35, $1.80, and $2.25/MMBtu) represent the baseline cost and a range of ±25 percent around the baseline.

Figure 9. Average LCOE Sensitivity to Capacity Factor

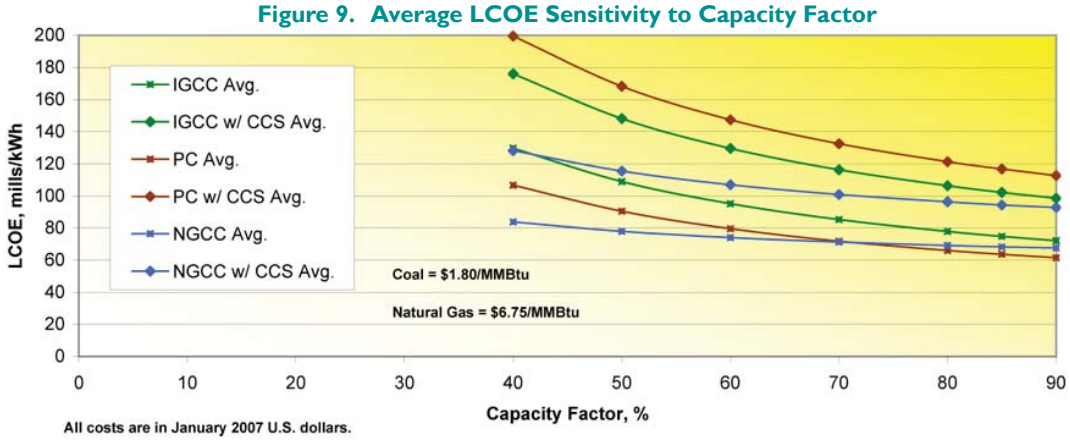

Without CCS, at the baseline coal cost of $1.80/MMBtu, the LCOE for PC cases equals that of NGCC case at a natural gas price of $6.15/MMBtu; and LCOE for IGCC cases equals that of NGCC case at a gas price of $7.96/MMBtu. With CCS, for the coal-based technologies at a baseline coal cost of $1.80/MMBtu, to be equal to the NGCC case, the cost of natural gas would have to be $7.73/MMBtu (IGCC cases) and $8.87/MMBtu (PC cases).

Figure 10. LCOE Sensitivity to Fuel Costs

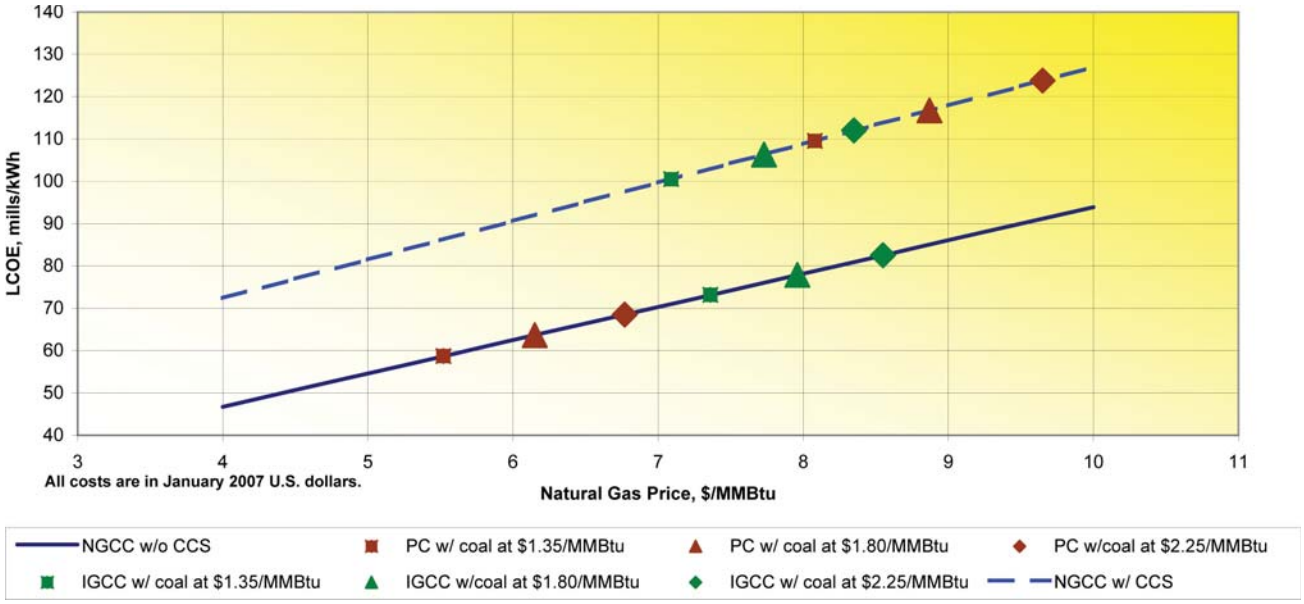

Contacts

Julianne M. Klara
Senior Analyst
National Energy Technology Laboratory
626 Cochrans Mill Road
P.O. Box 10940
Pittsburgh, PA 15236
412-386-6089
julianne.klara@netl.doe.gov

John G. Wimer
Systems Analysis Team Lead
National Energy Technology Laboratory
3610 Collins Ferry Road
P. O. Box 880
Morgantown, WV 26507
304-285-4124
john.wimer@netl.doe.gov

Reference: Cost and Performance Baseline for Fossil Energy Plants, Vol. 1, DOE/NETL-2007/1281, May 2007.
Overview_051507

IGCC Plants With and Without Carbon Capture and Sequestration

Technology Overview

Six Integrated Gasification Combined-Cycle (IGCC) power plant configurations operating on bituminous coal were evaluated and the results are presented in this summary sheet. All cases were analyzed on the same basis, using a consistent set of assumptions and analytical tools. Each gasifier type was assessed with and without carbon capture and sequestration (CCS). The individual configurations are as follows:

- GE Energy (GEE) IGCC plant.
- GEE IGCC plant with CCS.
- ConocoPhillips (CoP) E-Gas™ IGCC plant.
- CoP IGCC plant with CCS.
- Shell IGCC plant.
- Shell IGCC plant with CCS.

Each IGCC design is based on a market-ready technology that is assumed to be commercially available in time to support a 2010 startup date. In cases where equipment or processes have little or no commercial operating experience, a process contingency was added to the cost analysis. The IGCC plants are built at a greenfield site in the midwestern United States and are assumed to operate at 80 percent capacity factor (CF) without sparing of major train components. Nominal plant size (gross rating) is 750 MWe without CCS and 700 MWe with CCS. All designs employ state-of-the-art gasifier technology. The primary fuel is an Illinois No. 6 bituminous coal with a higher heating value (HHV) of 11,666 Btu/lb. Syngas generated in the oxygen (O_2)-blown gasifier is cooled and cleaned prior to being fed to two advanced F-Class combustion turbines. The Brayton cycle is combined with two heat recovery steam generators (HRSGs) and a steam turbine for Rankine cycle power generation. For the CCS cases, a water-gas-shift (WGS) reactor converts carbon monoxide (CO) to carbon dioxide (CO_2), and a two-stage Selexol Acid Gas Removal (AGR) unit separates the hydrogen sulfide and CO_2. After compression, the CO_2 is transported for storage and monitoring.

See Figure 1 for a generic block flow diagram of an IGCC plant. The orange blocks in the figure represent the unit operations added to the configuration for CCS cases.

Figure 1. IGCC Power Plant

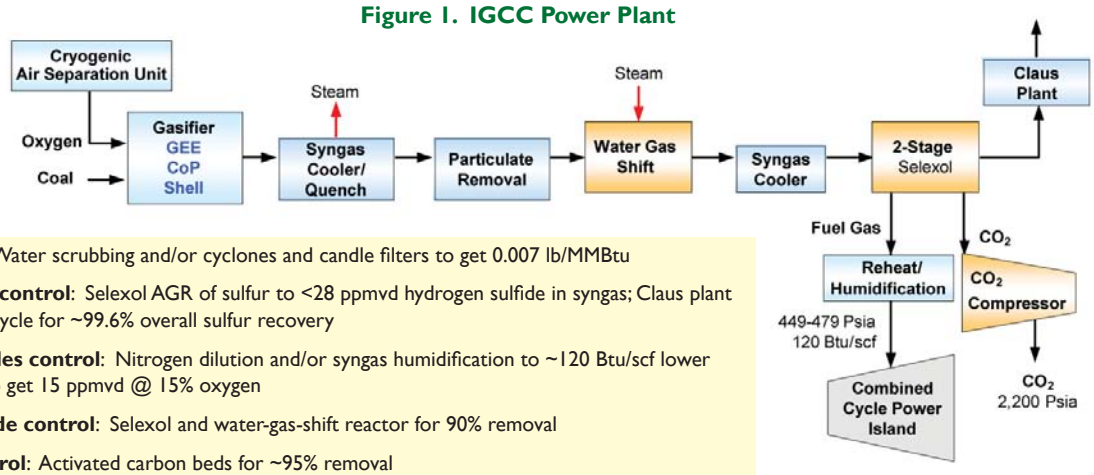

PM control: Water scrubbing and/or cyclones and candle filters to get 0.007 lb/MMBtu

Sulfur oxides control: Selexol AGR of sulfur to <28 ppmvd hydrogen sulfide in syngas; Claus plant with tail gas recycle for ~99.6% overall sulfur recovery

Nitrogen oxides control: Nitrogen dilution and/or syngas humidification to ~120 Btu/scf lower heating value to get 15 ppmvd @ 15% oxygen

Carbon dioxide control: Selexol and water-gas-shift reactor for 90% removal

Mercury control: Activated carbon beds for ~95% removal

Advanced F-Class turbine: 232 MWe

Steam conditions: 1,800 psig/1,050°F (w/o CCS); 1,800 psig/1,000°F (with CCS)

Gross Power (MWe)
2 Comb. Turbines: 464
1 Stm. Turb: 230-306
Total Gross Power: 694-770

Total Net Power: 517-640 MWe

Orange blocks indicate unit operations added for CCS Case.

Note: Diagram is provided for general reference of major flows only. For complete flow information, please refer to the final report.

Technical Description

Oxygen-blown, dual-gasifier trains are supplied with Illinois No. 6 bituminous coal. Cryogenic air separation units supply 95 mole percent oxygen to the gasifiers. After being cleaned of particulate matter (PM), mercury (Hg), and sulfur compounds, the syngas is fed to two combustion turbines. The combustion turbines are based on an advanced F-Class design that generates 232 MWe on syngas. With two combustion turbines, the combined gross gas turbine output is 464 MWe.

Nitrogen dilution is used to the maximum extent possible in all cases, and syngas humidification and steam injection are used only if necessary to achieve a syngas lower heating value (LHV) of approximately 120 Btu/scf. The Brayton cycle is integrated with a conventional subcritical steam Rankine cycle consisting of two HRSGs and a steam turbine, operating at 12.4 MPa/566°C/566°C (1,800 psig/1,050°F/1,050°F) in cases without CCS. The two cycles are integrated by use of the combustion turbine exhaust heat for generation of steam in the HRSGs, by feedwater heating in the HRSGs, and by heat recovery from the IGCC process. Recirculating evaporative cooling systems are used for cycle heat rejection. The average efficiency of the cases without CCS is 39.5 percent HHV for a plant with a nominal gross rating of 750 MWe.

The CCS cases require a significant amount of auxiliary power and extraction steam for the process, which reduces the output of the steam turbine in those cases due to a reduction in steam conditions to 12.4 MPa/538 °C/538°C (1,800 psig/1,000°F/1,000°F). The lower main and reheat steam temperature is due to reduced turbine firing temperature. Although the reduced firing temperature allows for more reliable operation with a high-hydrogen content fuel, it also results in a lower turbine exhaust temperature. This results in a lower nominal gross plant output for the CCS cases of about 700 MWe, for an average net plant efficiency of 32 percent (HHV basis).

The nominal 90 percent CO_2 reduction is accomplished by adding sour-gas-shift (SGS) reactors to convert CO to CO_2 and using a two-stage Selexol process with a second stage CO_2 removal efficiency of up to 95 percent, a number that was supported by vendor quotes. In the GEE CO_2 capture case, two stages of SGS and a Selexol removal efficiency of 92 percent were required, which resulted in 90.2 percent reduction of CO_2 in the syngas. The CoP capture case required three stages of SGS and 95 percent capture in the Selexol process, which resulted in 88.4 percent reduction of CO_2 in the syngas. In the CoP case, the capture target of 90 percent could not be achieved because of the high syngas methane content (3.5 volume percent (vol%) compared to 0.10 vol% in the GEE gasifier and 0.04 vol% in the Shell gasifier). The Shell capture case required two stages of SGS and 95 percent capture in the Selexol process, which resulted in 90.8 percent reduction of CO_2 in the syngas.

Once captured, the CO_2 is dried and compressed to 15.3 MPa (2,215 psia). The compressed CO_2 is transported via pipeline to a geologic sequestration field for injection into a saline aquifer, which is located within 50 miles of the plant. Therefore, CO_2 transport, storage, and monitoring costs are included in the analyses.

Fuel Analysis and Costs

All IGCC coal-fired cases were modeled using Illinois No. 6 coal, characterized by the proximate analysis shown in Table 1.

Table 1. Fuel Analysis

Rank	Bituminous	
Seam	Illinois No. 6 (Herrin)	
Source	Old Ben Mine	
Proximate Analysis (weight %)[1]		
	As Received	Dry
Moisture	11.12	0.00
Ash	9.70	10.91
Volatile matter	34.99	39.37
Fixed carbon	44.19	49.72
Total	**100.00**	**100.00**
Sulfur	2.51	2.82
Higher heating value, Btu/lb	11,666	13,126
Lower heating value, Btu/lb	11,252	12,712

[1]The above proximate analysis assumes sulfur as a volatile matter.

A cost of $1.80/MMBtu (January 2007 dollars) was determined from the Energy Information Administration AEO2007 for an eastern interior high-sulfur bituminous coal.

Environmental Design Basis

The environmental approach for this study was to evaluate each of the IGCC cases on the same regulatory design basis. The environmental specifications for a greenfield IGCC plant are based on the Electric Power Research Institute (EPRI) *CoalFleet User Design Basis for Coal-Based IGCC Plants* specification. Table 2 provides details of the environmental design basis for IGCC plants built at a midwestern location. The emission controls assumed for each of the six IGCC cases are as follows:

Table 2. Environmental Targets

Pollutant	IGCC
SO_2	0.0128 lb/MMBtu
NOx	15 ppmvd @ 15% Oxygen
PM (filterable)	0.0071 lb/MMBtu
Hg	>90% capture

- Selexol, Sulfinol-M, or refrigerated methyldiethanolamine AGR in combination with a Claus plant are used for sulfur dioxide (SO_2) control in the GEE, Shell, and CoP cases without CCS, respectively.
- A two-stage Selexol process was used for AGR and CO_2 control in all CCS cases.
- Nitrogen dilution is used for nitrogen oxides (NOx) control to the maximum extent possible, and humidification and steam injection are used to obtain the required syngas heating value, if required.
- Water scrubbing and/or cyclones and candle filters were used for PM control.
- Activated carbon beds were used for Hg removal.

Major Economic and Financial Assumptions

For the IGCC cases, estimates of capital cost, production cost, and levelized cost-of-electricity (LCOE) estimates were developed for each plant based on adjusted vendor-furnished and actual cost data from recent design/build projects. These costs resulted in determination of a revenue requirement for a 20-year LCOE based on the power plant costs and assumed financing structure. Listed in Table 3 are the major economic and financial assumptions for the IGCC cases.

Table 3. Major Economic and Financial Assumptions for IGCC Cases

Major Economic Assumptions	
Capacity factor	80%
Costs per year, constant U.S. dollars	2007 (January)
Illinois No. 6 coal delivered cost	$1.80/MMBtu
Construction period	3 years
Plant startup date	2010 (January)
Major Financial Assumptions	
Depreciation	20 years
Federal income tax	34%
State income tax	6%
After tax weighted cost of capital	9.67%
Capital structure:	
Common equity Debt	55% (Cost = 12%) 45% (Cost = 11%)
Capital charge factor	17.5%

Project contingencies were added to each of the cases to cover project uncertainty and the cost of any additional equipment that could result from detailed design. The project contingencies represent costs that are expected to occur. Project contingency was an average of 13.4 percent for the IGCC cases without CCS and an average of 13.8 percent for the IGCC cases with CCS.

Process contingency is intended to compensate for uncertainties arising as a result of the state of technology development. Process contingencies have been applied to the estimates as follows:

- Slurry Prep and Feed – 5 percent on GE IGCC cases.
- Gasifiers and Syngas Coolers – 15 percent on all IGCC cases.
- Two Stage Selexol – 20 percent on all IGCC cases with CCS.
- Mercury Removal – 5 percent on all IGCC cases.

- Combustion Turbine Generator – 5 percent on all IGCC cases without CCS; 10 percent on all IGCC cases with CCS.
- Instrumentation and Controls – 5 percent on all IGCC cases.

This study assumes that each new plant would be dispatched any time it is available and would be capable of generating maximum capacity when online. Therefore, CF is assumed to equal availability and is 80 percent for IGCC cases. The assumed capacity factor for IGCC is 80 percent.

For the IGCC cases that feature CCS, capital and operating costs were estimated for transporting CO_2 to an underground storage field, associated storage in a saline aquifer, and for monitoring beyond the expected life of the plant. These costs were then levelized over a 20-year period.

Results

An analysis of the six IGCC cases is presented in the following subsections.

Capital Cost

The total plant cost (TPC) for each of the six IGCC cases is compared in Figure 2. The TPC includes all equipment (complete with initial chemical and catalyst loadings), materials, labor (direct and indirect), engineering and construction management, and contingencies (process and project). Owner's costs are not included.

Figure 2. Comparison of TPC for the Six IGCC Cases

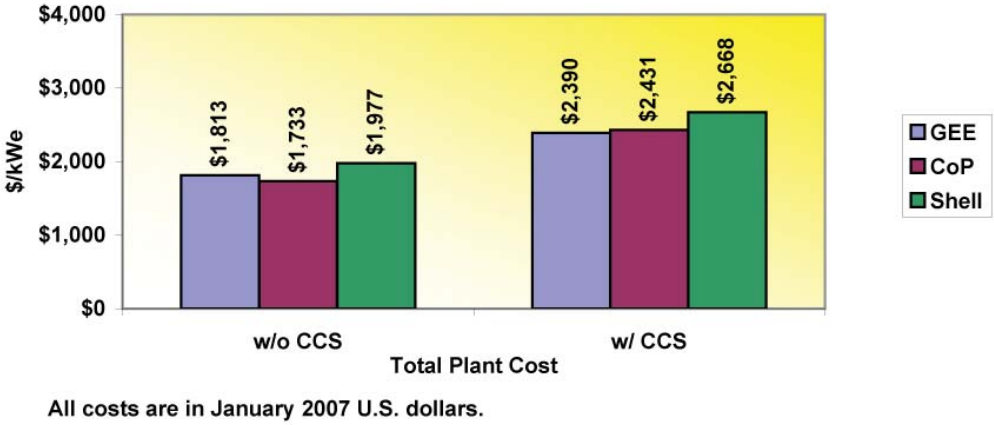

The results of the analysis indicate that the Shell IGCC costs about $244/kWe more than the CoP IGCC without CCS. With CCS, the TPC increases by roughly 32–40 percent for the range of IGCC cases, resulting in a spread of capital costs from $2,390/kWe to $2,668/kWe. The Shell IGCC still remains the highest capital cost configuration.

Efficiency

The net plant HHV efficiencies for the six IGCC cases are compared in Figure 3. This analysis indicates that, in the cases without CCS, the Shell plant efficiency of 41.1 percent HHV is almost 3 percentage points higher than the GEE case. With CCS cases, the efficiency penalty is a 5.7 to 9 percentage point HHV drop in all IGCC plant cases, resulting in an average efficiency of roughly 32 percent HHV.

Figure 3. Comparison of Net Plant Efficiency for the Six IGCC Cases

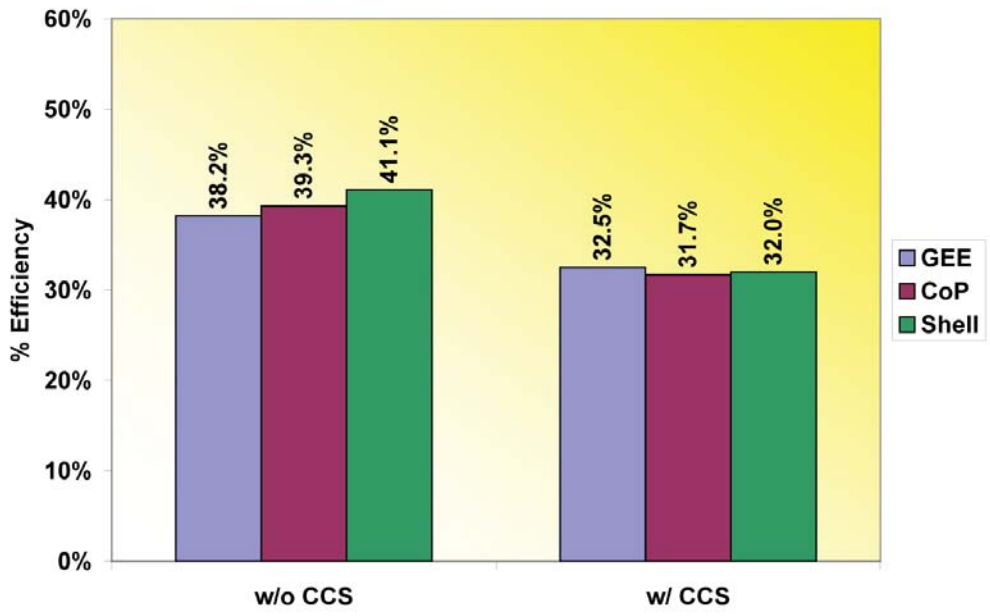

Figure 4. Comparison of Levelized Cost-of-Electricity for the Six IGCC Cases

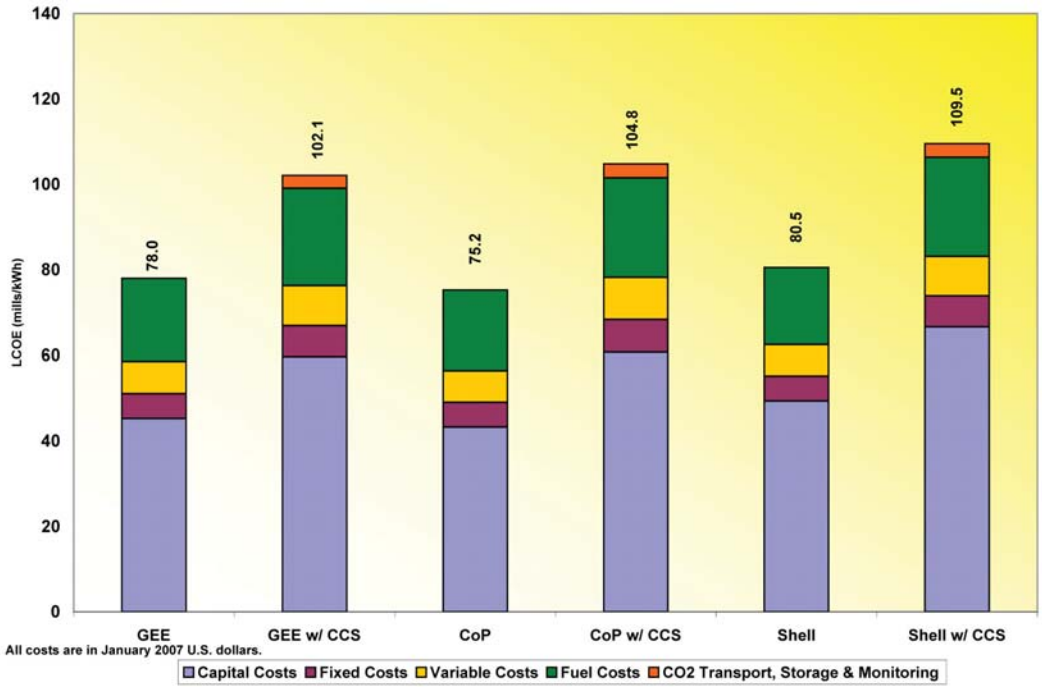

The LCOE is a measurement of the coal-to-busbar cost of power, and includes the TPC, fixed and variable operating costs, and fuel costs levelized over a 20-year period. The calculated cost of transport, storage, and monitoring for CO_2 is about $4.30/short ton, which adds an average of 4 mills to the LCOE.

The IGCC plants generate power at an LCOE of about 78 mills/kWh at a CF of 80 percent. When CCS is included, the increased TPC and reduced efficiency result in a higher LCOE of roughly 106 mills/kWh.

Environmental Impacts

Table 4 indicates that the emissions from all six IGCC plants evaluated meet or exceed EPRI's *CoalFleet User Design Basis for Coal-Based IGCC Plants* specification. Carbon dioxide emissions are reduced by 90 percent in the capture cases, resulting in less than 460,000 tons/year of CO_2 emissions. The cost of CO_2 avoided is defined as the difference in the 20-year LCOE between controlled and uncontrolled like cases, divided by the difference in CO_2 emissions in kg/MWh. In these analyses, the cost of CO_2 avoided ranges from $32/ton to $42/ton. Raw water usage in both cases with and without CCS is roughly 4,000 gpm.

Table 4. Comparative Emissions for the Six IGCC Cases @ 80% Capacity Factor

Pollutant	IGCC					
	GEE		CoP		Shell	
	Without CCS	With CCS (90%)	Without CCS	With CCS (90%)	Without CCS	With CCS (90%)
CO_2						
• tons/year	3,937,728	401,124	3,777,815	460,175	3,693,990	361,056
• lb/MMBtu	197	19.6	199	23.6	200	18.7
• cost of CO_2 avoided ($/ton)	---	32	---	41	---	42
SO_2						
• tons/year	254	196	237	167	230	204
• lb/MMBtu	0.0127	0.0096	0.0125	0.0085	0.0124	0.0105
NOx						
• tons/year	1,096	955	1,126	972	1,082	944
• lb/MMBtu	0.055	0.047	0.059	0.050	0.058	0.049
PM						
• tons/year	142	145	135	139	131	137
• lb/MMBtu	0.0071	0.0071	0.0071	0.0071	0.0071	0.0071
Hg						
• tons/year	0.011	0.012	0.011	0.011	0.011	0.011
• lb/TBtu	0.571	0.571	0.571	0.571	0.571	0.571
Raw water usage, gpm	4,003	4,579	3,757	4,135	3,792	4,563

Contacts

Julianne M. Klara
Senior Analyst
National Energy Technology Laboratory
626 Cochrans Mill Road
P.O. Box 10940
Pittsburgh, PA 15236
412-386-6089
julianne.klara@netl.doe.gov

John G. Wimer
Systems Analysis Team Lead
National Energy Technology Laboratory
3610 Collins Ferry Road
P. O. Box 880
Morgantown, WV 26507
304-285-4124
john.wimer@netl.doe.gov

Reference: Cost and Performance Baseline for Fossil Energy Plants, Vol. 1, DOE/NETL-2007/1281, May 2007.

B_IG_051507

GE Energy IGCC Plant

Plant Overview

This analysis is based on a 640 MWe (net power output) Integrated Gasification Combined-Cycle (IGCC) plant using GE Energy (GEE) radiant-only gasification technology, located at a greenfield site in the midwestern United States. The radiant-only configuration consists of a radiant synthesis gas cooler followed by a water quench. Two pressurized, slurry-fed, entrained flow gasification trains feed two advanced F-Class combustion turbines. Two heat recovery steam generators (HRSGs) and one steam turbine provide additional power. The combination process and heat and mass balance diagram for the GEE IGCC plant is shown in Figure 1. The primary fuel is an Illinois No. 6 bituminous coal with a higher heating value (HHV) of 11,666 Btu/lb. The capacity factor (CF) for the plant is 80 percent without sparing of major train components. A summary of plant performance data for the GEE IGCC plant is presented in Table 1.

Table 1. Plant Performance Summary

Plant Type	GEE IGCC
Carbon capture	No
Net power output (kWe)	640,250
Net plant HHV efficiency (%)	38.2
Primary fuel (type)	Illinois No. 6 coal
Levelized cost-of-electricity (mills/kWh) @ 80% capacity factor	78.0

Figure 1. Process Flow Diagram
GEE IGCC

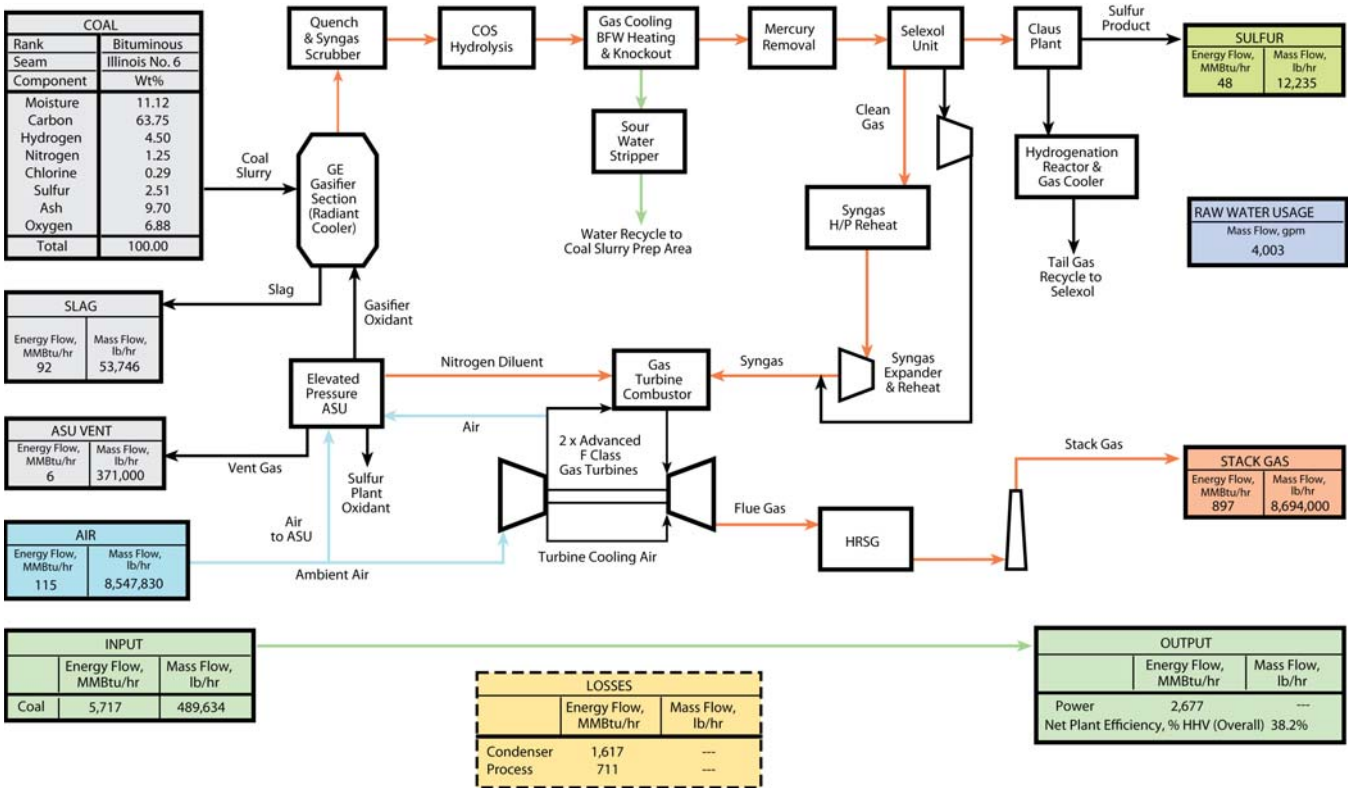

Note: Diagram is provided for general reference of major flows only. For complete flow information, please refer to the final report.

Technical Description

The plant uses an improved version of the GEE gasification technology (formerly licensed by Chevron Corp. and predecessor company Texaco Inc.), which is currently in operation at the 250 MWe Tampa Electric IGCC plant in Polk County, FL. All technology selected in the plant design is assumed to be available to facilitate a 2010 startup date for anewly constructed plant. A summary of performance for an advanced F-Class combustion turbine for the GEE IGCC plant is presented in Table 2.

Table 2. Advanced Gas Turbine Performance[1]

	Advanced F-Class
Net output, MWe	185
Pressure ratio	18.5
Airflow, kg/s (lb/s)	431 (950)
Firing temperature°C (°F)	>1,371 (>2,500)

[1]At International Standards Organization conditions firing natural gas. Performance information for syngas firing is not available.

Two gasification trains process a total of 5,876 tons of coal per day. A slurry (63 percent by weight coal) is transferred from the slurry storage tank to the gasifier with a high-pressure pump. Oxygen (O_2) is produced in a cryogenic air separation unit. The coal slurry and O_2 react in the gasifier at about 5.6 MPa (815 psia) at a high temperature (in excess of 1,316°C [2,400°F]) to produce syngas. Hot syngas and molten solids from the reactor flow downward into a radiant heat exchanger, where the syngas is cooled to 593°C (1,100°F) and the ash solidifies. Raw syngas continues downward into a quench system where most of the particulate matter (PM) is removed and then into the syngas scrubber where most of the remaining entrained solids are removed along with ammonia. Slag captured by the quench system is recovered in a slag recovery unit. The gas goes through a series of additional gas coolers and cleanup processes, including a carbonyl sulfide hydrolysis reactor, a carbon bed for mercury (Hg) removal, and a Selexol-based acid gas removal (AGR) plant.

A Brayton cycle, fueled by syngas, is used in conjunction with a conventional subcritical steam Rankine cycle for combined-cycle power generation. Compressed nitrogen from the air separation unit is used for syngas dilution, which aids in minimizing the formation of nitrogen oxides (NOx) during combustion in the gas turbine burner section. The limiting factor that determines the use of a subcritical steam cycle is the maximum design pressure of 12.4 MPa (1,800 psig), which can be tolerated in the GEE radiant cooler. The two cycles are integrated by generation of steam in the HRSGs, by feedwater heating in the HRSGs, and by heat recovery from the IGCC process (radiant syngas cooler). The HRSG/steam turbine cycle is 12.4 MPa/566°C/566°C (1,800 psig/1,050°F/1,050°F). The plant produces a net output of 640 MWe. The summary of plant electrical generation performance is presented in Table 3. This configuration results in a net plant efficiency of 38.2 percent (HHV basis), or a net HHV heat rate of 8,922 Btu/kWh.

Table 3. Plant Electrical Generation

	Electrical Summary
Advanced gas turbine x 2, MWe	464.3
Steam turbine, MWe	298.9
Sweet gas expander, MWe	7.1
Gross power output, MWe	770.3
Auxiliary power requirement, MWe	(130.1)
Net power output, MWe	640.2

Environmental Performance

The environmental specifications for a greenfield IGCC plant are based on the Electric Power Research Institute *CoalFleet User Design Basis for Coal-Based IGCC Plants* specification. Low sulfur dioxide (SO_2) emissions (less than 4 ppmv in the flue gas) are achieved by capture of the sulfur in the Selexol AGR process, which removes over 99 percent of the sulfur in the fuel gas. The resulting hydrogen sulfide-rich regeneration gas from the AGR system is fed to a Claus plant, producing elemental sulfur. Nitrogen oxides emissions are limited by nitrogen dilution in the gas turbine combustor to 15 ppmvd (as nitrogen oxide at 15 percent O_2). Filterable PM discharge to the atmosphere is limited by the use of the syngas quench in addition to the syngas scrubber and the gas-washing effect of the AGR absorber. Ninety-five percent of the Hg is captured from the syngas by an activated carbon bed.

A summary of the resulting air emissions for the GEE IGCC plant is presented in Table 4.

Cost Estimation

Plant size, primary/secondary fuel type, construction time, total plant cost (TPC) basis year, plant CF, plant heat rate, fuel cost, plant book life, and plant in-service date were used to develop capital cost, production cost, and levelized cost-of-electricity (LCOE) estimates. Costs for the plant were based on adjusted vendor-furnished and actual cost data from recent design/build projects. Values for financial assumptions and a cost summary are shown in Table 5.

Project contingencies were added to each case to cover project uncertainty and the cost of any additional equipment that could result from detailed design. The project contingencies represent costs that are expected to occur. Project contingency was 13.3 percent of the GEE IGCC case TPC.

Process contingency is intended to compensate for uncertainties arising as a result of the state of technology development. Process contingencies represent 2.5 percent of the GEE IGCC case TPC and have been applied to the estimates as follows:

- Slurry Prep and Feed – 5 percent on GE IGCC cases.
- Gasifiers and Syngas Coolers – 15 percent on all IGCC cases.
- Mercury Removal – 5 percent on all IGCC cases.
- Combustion Turbine Generator – 5 percent on all IGCC cases without CCS.
- Instrumentation and Controls – 5 percent on all IGCC cases.

Table 4. Air Emissions Summary @ 80% Capacity Factor

Pollutant	GEE IGCC Without CSS
CO_2	
• tons/year	3,937,728
• lb/MMBtu	197
• cost of CO_2 avoided	N/A
SO_2	
• tons/year	254
• lb/MMBtu	0.0127
NOx	
• tons/year	1,096
• lb/MMBtu	0.055
PM (filterable)	
• tons/year	142
• lb/MMBtu	0.0071
Hg	
• tons/year	0.011
• lb/TBtu	0.571

This study assumes that each new plant would be dispatched any time it is available and would be capable of generating maximum capacity when online. Therefore, CF is assumed to equal availability and is 80 percent for IGCC cases.

The 640 MWe (net) GEE IGCC plant was projected to have a TPC of $1,813/kWe, resulting in a 20-year LCOE of 78 mills/kWh.

Table 5. Major Financial Assumptions and Resulting Cost Summary[1]

Major Assumptions					
Case:	**1x640 MWe net GEE IGCC**				
Plant Size:	640.3	(MWe, net)	Heat Rate:	8,922	(Btu/kWh)
Primary/Secondary Fuel (type):	Illinois #6 Coal		Fuel Cost:	1.80	($/MMBtu)
Construction Duration:	3	(years)	Plant Life:	30	(years)
Total Plant Cost[2] Year:	2007	(January)	Plant in Service:	2010	(January)
Capacity Factor:	80	(%)	Capital Charge Factor:	17.5	(%)
Resulting Capital Investment (Levelized 2007 dollars)					**Mills/kWh**
Total Plant Cost					43.3
Resulting Operating Costs (Levelized 2007 dollars)[3]					**Mills/kWh**
Fixed Operating Cost					5.8
Variable Operating Cost					7.5
Resulting Fuel Cost (Levelized 2007 dollars) @ $1.80 / MMBtu					**Mills/kWh**
					19.4
Total Levelized Busbar Cost of Power (2007 dollars)					**Mills/kWh**
					78.0

[1]Costs shown can vary ± 30%.

[2]Total plant cost includes all equipment (complete with initial chemical and catalyst loadings), materials, labor (direct and indirect), engineering and construction management, and contingencies (process and project). Owner's costs are not included.

[3]No credit taken for by-product sales.

Contacts

Julianne M. Klara
Senior Analyst
National Energy Technology Laboratory
626 Cochrans Mill Road
P.O. Box 10940
Pittsburgh, PA 15236
412-386-6089
julianne.klara@netl.doe.gov

John G. Wimer
Systems Analysis Team Lead
National Energy Technology Laboratory
3610 Collins Ferry Road
P. O. Box 880
Morgantown, WV 26507
304-285-4124
john.wimer@netl.doe.gov

Reference: Cost and Performance Baseline for Fossil Energy Plants, Vol. 1, DOE/NETL-2007/1281, May 2007.

B_IG_GEE_051507

GE Energy IGCC Plant With Carbon Capture & Sequestration

Plant Overview

This analysis is based on a 556 MWe (net power output) Integrated Gasification Combined-Cycle (IGCC) plant, using GE Energy (GEE) radiant-only gasification technology, located at a greenfield site in the midwestern United States. The plant utilizes carbon capture and sequestration (CCS). Two pressurized, slurry-fed, entrained-flow gasification trains, utilizing water-gas–shift (WGS) reactors, feed two advanced F-Class combustion turbines. Two heat recovery steam generators (HRSGs) and one steam turbine provide additional power. Carbon dioxide (CO_2) is removed with the two-stage Selexol physical solvent process. The combination process and heat and mass balance diagram for the GEE IGCC plant with CCS case is shown in Figure 1. The primary fuel is an Illinois No. 6 bituminous coal with an assumed higher heating value (HHV) of 11,666 Btu/lb. The capacity factor (CF) for the plant is 80 percent without sparing of major train components. A summary of plant performance data for the GEE IGCC plant with CCS case is presented in Table 1.

Table 1. Plant Performance Summary

Plant Type	GEE IGCC
Carbon capture	Yes
Net power output (kWe)	555,675
Net plant HHV efficiency (%)	32.5
Primary fuel (type)	Illinois No. 6 coal
Levelized cost-of-electricity (mills/kWh) @ 80% capacity factor	102.9
Total plant cost ($ x 1,000)	$1,328,209
Cost of CO_2 avoided[1] ($/ton)	32

[1]The cost of CO_2 avoided is defined as the difference in the 20-year levelized cost-of-electricity between controlled and uncontrolled like cases, divided by the difference in CO_2 emissions in kg/MWh.

Figure 1. Process Flow Diagram GEE IGCC with CCS

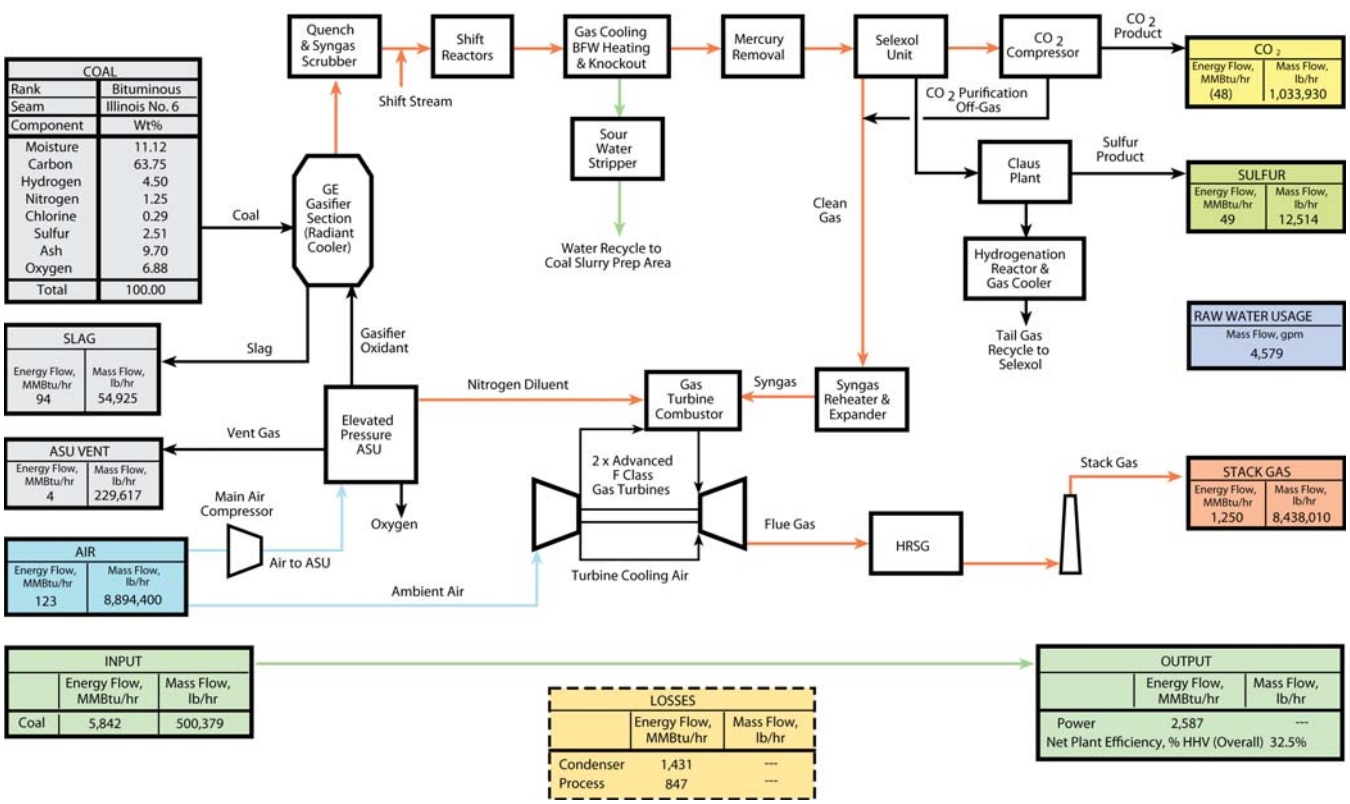

Note: Diagram is provided for general reference of major flows only. For complete flow information, please refer to the final report.

Technical Description

The plant uses an improved version of the GEE gasification technology (formerly licensed by Chevron Corp. and predecessor company Texaco Inc.), which is currently in operation at the 250 MWe Tampa Electric IGCC plant in Polk County, FL. All technology selected for the plant design is assumed to be available to facilitate a 2010 startup date for a newly constructed plant. A summary of performance for the advanced F-Class combustion turbine for the GEE IGCC plant with CCS is presented in Table 2.

Table 2. Advanced Gas Turbine Performance[1]

	Advanced F-Class
Net output, MWe	185
Pressure ratio	18.5
Airflow, kg/s (lb/s)	431 (950)
Firing temperature, °C (°F)	>1,371 (>2,500)

[1]At International Standards Organization conditions firing natural gas. Performance information for syngas firing is not available.

Two gasification trains process a total of 6,005 tons of coal per day. A slurry (63 percent by weight coal) is transferred from the slurry storage tank to the gasifier with a high-pressure pump. Oxygen (O_2) is produced in a cryogenic air separation unit. The coal slurry and O_2 react in the gasifier at about 5.6 MPa (815 psia) at a high temperature (in excess of 1,316°C [2,400°F]) to produce syngas. Hot syngas and molten solids from the reactor flow downward into a radiant heat exchanger, where the syngas is cooled to 593°C (1,100°F) and the ash solidifies. Raw syngas continues downward into a quench system where most of the particulate matter (PM) is removed and then into the syngas scrubber where most of the remaining entrained solids are removed along with halogens and ammonia. Slag captured by the quench system is recovered in a slag recovery unit. The gas goes through a series of additional gas coolers and cleanup processes, including a carbon bed for mercury (Hg) removal.

To capture CO_2, a WGS reactor containing a series of two shifts with intercooled stages converts a nominal 96 percent of the carbon monoxide to CO_2. Carbon dioxide is removed from the cool, particulate-free gas stream with Selexol solvent. The dual-absorber Selexol acid gas removal (AGR) process preferentially removes hydrogen sulfide (H_2S) as a product stream, leaving CO_2 as a separate product stream. The CO_2 is dried and compressed to 15.3 MPa (2,215 psia) for subsequent pipeline transport. The compressed CO_2 is transported via pipeline to a geologic sequestration field for injection into a saline aquifer, which is located within 50 miles of the plant.

Table 3. Plant Electrical Generation

	Electrical Summary
Advanced gas turbine x 2, MWe	464.0
HRSG steam turbine, MWe	274.7
Sweet gas expander, MWe	6.3
Gross power output, MWe	745.0
Auxiliary power requirement, MWe	(189.3)
Net power output, MWe	555.7

A Brayton cycle, fueled by the syngas, is used in conjunction with a conventional subcritical steam Rankine cycle for combined-cycle power generation. The limiting factor that determines the use of a subcritical steam cycle is the maximum design pressure of 12.4 MPa (1,800 psig), which can be tolerated in the GEE radiant cooler. The two cycles are integrated by generation of steam in the HRSGs, by feedwater heating in the HRSGs, and by heat recovery from the IGCC process (radiant syngas cooler). The HRSG/steam turbine cycle is 12.4 MPa/538°C/538°C (1,800 psig/1,000°F/1,000°F). The plant produces a net output of 555.7 MWe. The summary of plant electrical generation performance is presented in Table 3. This configuration results in a net plant efficiency of 32.5 percent (HHV basis), or a net plant HHV heat rate of 10,505 Btu/kWh.

Environmental Performance

The environmental specifications for a greenfield IGCC plant are based on the Electric Power Research Institute *CoalFleet User Design Basis for Coal-Based IGCC Plants* specification. Low sulfur dioxide (SO_2) emissions (3 ppm in the flue gas) are achieved by capture of the sulfur in the Selexol AGR process, which removes 99 percent of the sulfur in the fuel gas. The resulting H_2S-rich regeneration gas from the AGR system is fed to a Claus plant, producing elemental sulfur. Nitrogen oxides (NOx) emissions are limited by nitrogen dilution in the gas turbine combustor to 15 ppmvd (as nitrogen oxide at 15 percent O_2). Particulate discharge to the atmosphere is limited by the use of the syngas quench in addition to the syngas scrubber and the gas-washing effect of the AGR absorber. Ninety-five percent of the Hg is captured from the syngas by an activated carbon bed. Ninety percent of the CO_2 from the syngas is captured in the AGR system and compressed for pipeline transport and sequestration.

A summary of the resulting air emissions for the GEE IGCC plant with CCS is presented in Table 4.

Table 4. Air Emissions Summary @ 80% Capacity Factor

Pollutant	GEE IGCC with CCS (90%)
CO_2	
• tons/year	401,124
• lb/MMBtu	19.6
• cost of CO_2 avoided ($/ton)	32
SO_2	
• tons/year	196
• lb/MMBtu	0.0096
NOx	
• tons/year	955
• lb/MMBtu	0.047
PM (filterable)	
• tons/year	145
• lb/MMBtu	0.0071
Hg	
• tons/year	0.012
• lb/TBtu	0.571

Cost Estimation

Plant size, primary/secondary fuel type, design/construction time, total plant cost (TPC) basis year, plant CF, plant heat rate, fuel cost, plant book life, and plant in-service date were used as inputs to develop capital cost, production cost, and levelized cost-of-electricity (LCOE) estimates. Costs for the plant were based on adjusted vendor-furnished and actual cost data from recent design/build projects. Values for financial assumptions and a cost summary are shown in Table 5.

Project contingencies were added to each case to cover project uncertainty and the cost of any additional equipment that could result from detailed design. The project contingencies represent costs that are expected to occur. Project contingency was 13.6 percent of the GEE IGCC with CCS case TPC.

Process contingency is intended to compensate for uncertainties arising as a result of the state of technology development. Process contingencies represent 4.2 percent of the GEE IGCC with CCS case TPC and have been applied to the estimates as follows:

- Slurry Prep and Feed – 5 percent on GE IGCC cases.
- Gasifiers and Syngas Coolers – 15 percent on all IGCC cases.
- Two Stage Selexol – 20 percent on all IGCC CCS cases.
- Mercury Removal – 5 percent on all IGCC cases.
- Combustion Turbine Generator – 10 percent on all IGCC cases with CCS.
- Instrumentation and Controls – 5 percent on all IGCC cases.

This study assumes that each new plant would be dispatched any time it is available and would be capable of generating maximum capacity when online. Therefore, CF is assumed to equal availability and is 80 percent for IGCC cases.

The calculated cost of transport, storage, and monitoring for CO_2 is $4.20/short ton, which adds 3.9 mills/kWh to the LCOE.

The 556 MWe (net) GEE IGCC plant with CCS was projected to have a TPC of $2,390/kWe, resulting in a 20-year LCOE of 102.9 mills/kWh.

Table 5. Major Financial Assumptions and Resulting Cost Summary[1]

Major Assumptions					
Case:	**1x556 MWe net GEE IGCC with CCS**				
Plant Size:	555.7	(MWe, net)	Heat Rate:	10,505	(Btu/kWh)
Primary/Secondary Fuel (type):	Illinois #6 Coal		Fuel Cost:	1.80	($/MMBtu)
Construction Duration:	3	(years)	Plant Life:	30	(years)
Total Plant Cost[2] Year:	2007	(January)	Plant in Service:	2010	(January)
Capacity Factor:	80	(%)	Capital Charge Factor:	17.5	(%)
Resulting Capital Investment (Levelized 2007 dollars)					**Mills/kWh**
Total Plant Cost					59.7
Resulting Operating Costs (Levelized 2007 dollars)[3]					**Mills/kWh**
Fixed Operating Cost					7.2
Variable Operating Cost					9.4
Resulting Fuel Cost (Levelized 2007 dollars) @ $1.80 / MMBtu					**Mills/kWh**
					22.8
Resulting Levelized CO_2 Cost (2007 dollars)					**Mills/kWh**
					3.9
Total Levelized Busbar Cost of Power (2007 dollars)					**Mills/kWh**
					102.9

[1]Costs shown can vary ± 30%.

[2]Total plant cost includes all equipment (complete with initial chemical and catalyst loadings), materials, labor (direct and indirect), engineering and construction management, and contingencies (process and project). Owner's costs are not included.

[3]No credit taken for by-product sales.

Contacts

Julianne M. Klara
Senior Analyst
National Energy Technology Laboratory
626 Cochrans Mill Road
P.O. Box 10940
Pittsburgh, PA 15236
412-386-6089
julianne.klara@netl.doe.gov

John G. Wimer
Systems Analysis Team Lead
National Energy Technology Laboratory
3610 Collins Ferry Road
P. O. Box 880
Morgantown, WV 26507
304-285-4124
john.wimer@netl.doe.gov

Reference: Cost and Performance Baseline for Fossil Energy Plants, Vol. 1, DOE/NETL-2007/1281, May 2007.

B_IG_GEE_CCS_051507

ConocoPhillips E-Gas™ IGCC Plant

Plant Overview

This analysis is based on a 623 MWe (net power output) Integrated Gasification Combined-Cycle (IGCC) plant, using ConocoPhillip E-Gas™ gasification technology, located at a greenfield site in the midwestern United States. Two pressurized entrained-flow, two-stage gasification trains feed two advanced F-Class combustion turbines. Two heat recovery steam generators (HRSGs) and one steam turbine provide additional power. The combination process and heat and mass balance diagram for the CoP IGCC plant is shown in Figure 1. The primary fuel is an Illinois No. 6 bituminous coal with a higher heating value (HHV) of 11,666 Btu/lb. The capacity factor (CF) for the plant is 80 percent without sparing of major train components. A summary of plant performance data for the CoP IGCC plant is presented in Table 1.

Table 1. Plant Performance Summary

Plant Type	CoP IGCC
Carbon capture	No
Net power output (kWe)	623,370
Net plant HHV efficiency (%)	39.3
Primary fuel	Illinois No. 6 coal
Levelized cost-of-electricity (mills/kWh) @ 80% capacity factor	75.3
Total plant cost ($ x 1,000)	$1,080,166

Figure 1. Process Flow Diagram
CoP IGCC

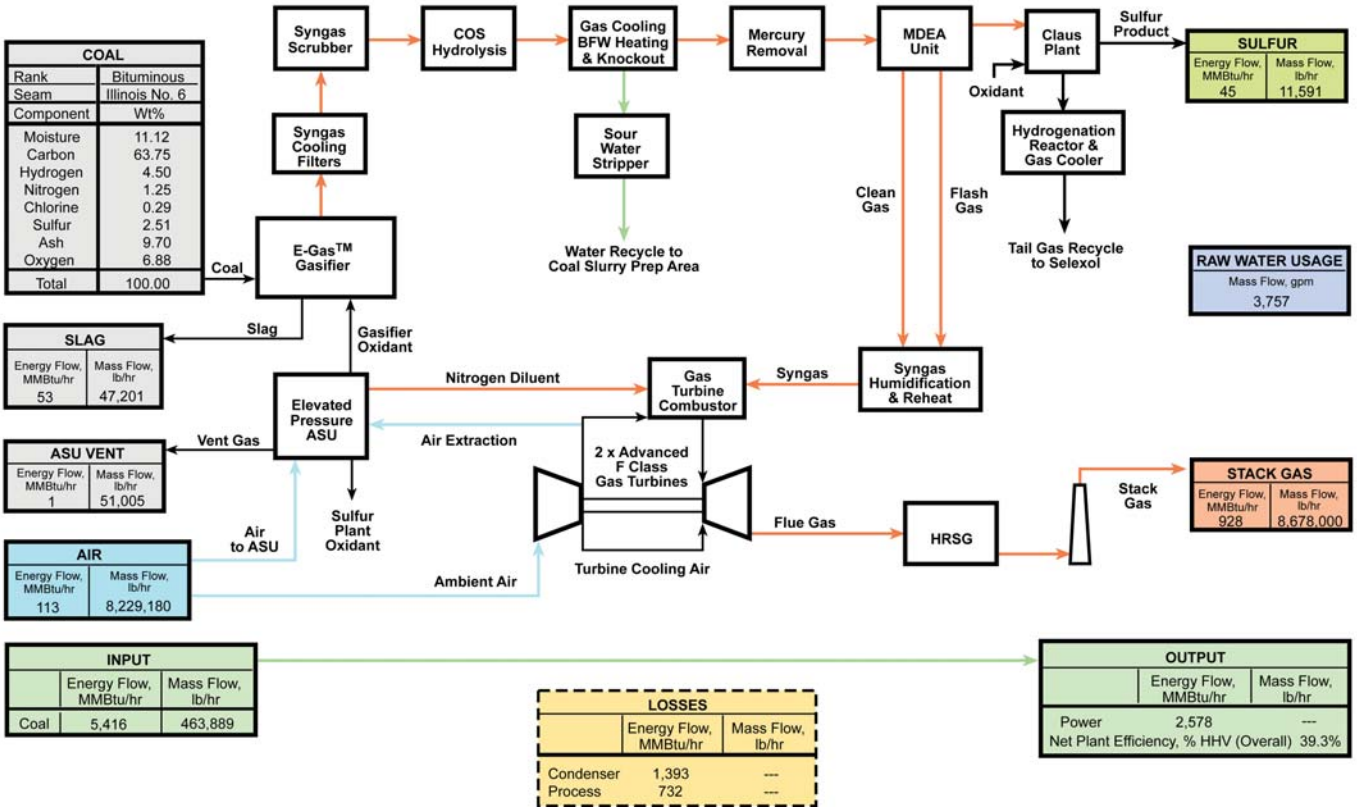

Note: Diagram is provided for general reference of major flows only. For complete flow information, please refer to the final report.

Technical Description

The plant uses an improved version of the CoP gasification technology, which is currently in operation at the PSI Energy Inc. 265 MWe Wabash River IGCC plant near West Terre Haute, IN. All technology selected in the plant design is assumed to be available to facilitate a 2010 startup date for a newly constructed plant. A summary of performance for the advanced F-Class combustion turbine for the CoP IGCC plant is presented in Table 2.

Table 2. Advanced Gas Turbine Performance[1]

	Advanced F-Class
Net output, MWe	185
Pressure ratio	18.5
Airflow, kg/s (lb/s)	431 (950)
Firing temperature, °C (°F)	>1,371 (>2,500)

[1]At International Standards Organization conditions firing natural gas. Performance information for syngas firing is not available.

Two gasification trains process a total of 5,567 tons of coal per day. A slurry (63 percent by weight coal) is transferred from the slurry storage tank to the gasifier with a 78/22 split to the primary and secondary stages. Oxygen (O_2) is produced in a cryogenic air separation unit. The coal slurry and oxygen react in the gasifier at about 4.2 MPa (615 psia) at a high temperature (averaging 1,371°C [>2,500°F]), while the portion of slurry injected into the second stage quenches the reaction by means of endothermic gasification reactions.

Gas leaving the gasifier is cooled in a fire-tube syngas cooler producing high-pressure steam. The cooled gas is cleaned of particulate matter (PM) via a cyclone collector followed by a ceramic candle filter. The raw syngas is then further cooled before being cleaned in a spray scrubber to remove remaining particulates and trace components. The syngas goes through a mercury (Hg) removal bed in which 95 percent of the Hg is removed from the syngas with activated carbon. Hydrogen sulfide (H_2S) is removed from the cool, particulate-free gas stream with a refrigerated promoted amine (methyldiethanolamine) solvent. Elemental sulfur is recovered in a Claus bypass-type sulfur recovery unit utilizing oxygen instead of air. The Claus plant produces molten sulfur by converting about one-third of the H_2S in the feed to sulfur dioxide (SO_2), then reacting the H_2S and SO_2 to produce sulfur and water.

A Brayton cycle, fueled by syngas, is used in conjunction with a conventional subcritical steam Rankine cycle for combined-cycle power generation. Compressed nitrogen from the air separation unit is used in syngas dilution, which aids in minimizing the formation of nitrogen oxides (NOx) during combustion in the gas turbine burner section. Two HRSGs and a steam turbine, operating at 12.4 MPa/566°C/566°C (1,800 psig/1,050°F/1,050°F), form the combined-cycle generation component of the plant. The two cycles are integrated by generation of steam in the HRSG, by feedwater heating in the HRSG, and by heat recovery from the IGCC process (syngas cooler). The plant produces a net output of 623 MWe. The summary of plant electrical generation performance is presented in Table 3. This configuration results in a net plant efficiency of 39.3 percent HHV, or a net plant HHV heat rate of 8,681 Btu/kWh.

Table 3. Plant Electrical Generation

	Electrical Summary
Advanced gas turbine x 2, MWe	464.0
HRSG steam turbine, MWe	278.5
Gross power output, MWe	742.5
Auxiliary power requirement, MWe	(119.1)
Net power output, MWe	623.4

Environmental Performance

The environmental specifications for a greenfield IGCC plant are based on the Electric Power Research Institute *CoalFleet User Design Basis for Coal-Based IGCC Plants* specification. Low SO_2 emissions (less than 4 ppmv in the flue gas) are achieved by capture of the sulfur in the Coastal SS Amine acid gas removal (AGR) process, which removes over 99 percent of the sulfur in the fuel gas to less than 30 ppmv. The resulting hydrogen sulfide-rich regeneration gas from the acid gas removal system is fed to a Claus plant, producing elemental sulfur. Nitrogen oxides emissions are limited by nitrogen dilution (primarily) and humidification (secondarily) to 15 ppmvd (as nitrogen dioxide at 15 percent O_2). Filterable PM discharge to the atmosphere is limited by a cyclone and a

barrier filter in addition to the syngas scrubber and the gas washing effect of the AGR absorber. Ninety-five percent of the Hg is captured from the syngas by an activated carbon bed.

A summary of the resulting air emissions for the CoP IGCC plant is presented in Table 4.

Table 4. Air Emissions Summary @ 80% Capacity Factor

Pollutant	CoP IGCC Without CCS
CO_2	
• tons/year	3,777
• lb/MMBtu	199
• cost of CO_2 avoided ($/ton)	N/A
SO_2	
• tons/year	237
• lb/MMBtu	0.0125
NOx	
• tons/year	1,126
• lb/MMBtu	0.059
PM (filterable)	
• tons/year	135
• lb/MMBtu	0.0071
Hg	
• tons/year	0.011
• lb/TBtu	0.571

Cost Estimation

Plant size, primary/secondary fuel type, construction time, total plant cost (TPC) basis year, plant CF, plant heat rate, fuel cost, plant book life, and plant in-service date were used to develop capital cost, production cost, and levelized cost-of-electricity (LCOE) estimates. Costs for the plant were based on adjusted vendor-furnished and actual cost data from recent design/build projects. Values for financial assumptions and a cost summary are shown in Table 5.

Project contingencies were added to each case to cover project uncertainty and the cost of any additional equipment that could result from detailed design. The project contingencies represent costs that are expected to occur. Project contingency was 13.3 percent of the CoP IGCC case TPC.

Process contingency is intended to compensate for uncertainties arising as a result of the state of technology development. Process contingencies represent 2.5 percent of the CoP IGCC case TPC and have been applied to the estimates as follows:

- Gasifiers and Syngas Coolers – 15 percent on all IGCC cases.
- Mercury Removal – 5 percent on all IGCC cases.
- Combustion Turbine Generator – 5 percent on all IGCC cases without CCS.
- Instrumentation and Controls – 5 percent on all IGCC cases.

This study assumes that each new plant would be dispatched any time it is available and would be capable of generating maximum capacity when online. Therefore, CF is assumed to equal availability and is 80 percent for IGCC cases.

The 623 MWe (net) CoP IGCC plant was projected to have a TPC of $1,733/kWe, resulting in a 20-year LCOE of 75.3 mills/kWh.

Table 5. Major Financial Assumptions and Resulting Cost Summary[1]

Major Assumptions					
Case:	**1x623 MWe net CoP IGCC**				
Plant Size:	623.4	(MWe, net)	Heat Rate:	8,681	(Btu/kWh)
Primary/Secondary Fuel (type):	Illinois #6 Coal		Fuel Cost:	1.80	($/MMBtu)
Construction Duration:	3	(years)	Plant Life:	30	(years)
Total Plant Cost[2] Year:	2007	(January)	Plant in Service:	2010	(January)
Capacity Factor:	80	(%)	Capital Charge Factor:	17.5	(%)
Resulting Capital Investment (Levelized 2007 dollars)					**Mills/kWh**
Total Plant Cost					43.3
Resulting Operating Costs (Levelized 2007 dollars)[3]					**Mills/kWh**
Fixed Operating Cost					5.8
Variable Operating Cost					7.3
Resulting Fuel Cost (Levelized 2007 dollars) @ $1.80 / MMBtu					**Mills/kWh**
					18.8
Total Levelized Busbar Cost of Power (2007 dollars)					**Mills/kWh**
					75.3

[1]Costs shown can vary ± 30%.

[2]Total plant cost includes all equipment (complete with initial chemical and catalyst loadings), materials, labor (direct and indirect), engineering and construction management, and contingencies (process and project). Owner's costs are not included.

[3]No credit taken for by-product sales.

Contacts

Julianne M. Klara
Senior Analyst
National Energy Technology Laboratory
626 Cochrans Mill Road
P.O. Box 10940
Pittsburgh, PA 15236
412-386-6089
julianne.klara@netl.doe.gov

John G. Wimer
Systems Analysis Team Lead
National Energy Technology Laboratory
3610 Collins Ferry Road
P. O. Box 880
Morgantown, WV 26507
304-285-4124
john.wimer@netl.doe.gov

Reference: Cost and Performance Baseline for Fossil Energy Plants, Vol. 1, DOE/NETL-2007/1281, May 2007.

B_IG_CoP_051507

ConocoPhillips E-Gas™ IGCC Plant With Carbon Capture & Sequestration

Plant Overview

This analysis is based on a 518 MWe (net power output) Integrated Gasification Combined-Cycle (IGCC) plant, using ConocoPhillips E-Gas™ gasification technology, located at a greenfield site in the midwestern United States. The plant utilizes carbon capture and sequestration (CCS). Two pressurized entrained-flow, two-stage gasification trains feed two advanced F-Class combustion turbines. Water-gas-shift (WGS) reactors are used for sour gas shift. Two heat recovery steam generators (HRSGs) and one steam turbine provide additional power. Carbon dioxide (CO_2) is removed with the two-stage Selexol physical solvent process. The combination process and heat and mass balance diagram for the CoP IGCC plant with CCS is shown in Figure 1. The primary fuel is an Illinois No. 6 bituminous coal with a higher heating value (HHV) of 11,666 Btu/lb. The capacity factor (CF) for the plant is 80 percent without sparing of major train components. A summary of plant performance data for the CoP IGCC plant with CCS is presented in Table 1.

Table 1. Plant Performance Summary

Plant Type	CoP IGCC
Carbon capture	Yes
Net power output (kWe)	518,240
Net plant HHV efficiency (%)	31.7
Primary fuel (type)	Illinois No. 6 coal
Levelized cost-of-electricity (mills/kWh) @ 80% capacity factor	105.7
Total plant cost ($ x 1,000)	$1,259,883
Cost of CO_2 avoided[1] ($/ton)	41

[1]The cost of CO_2 avoided is defined as the difference in the 20-year levelized cost-of-electricity between controlled and uncontrolled like cases divided by the difference in CO_2 emissions in kg/MWh.

Figure 1. Process Flow Diagram CoP IGCC With CCS

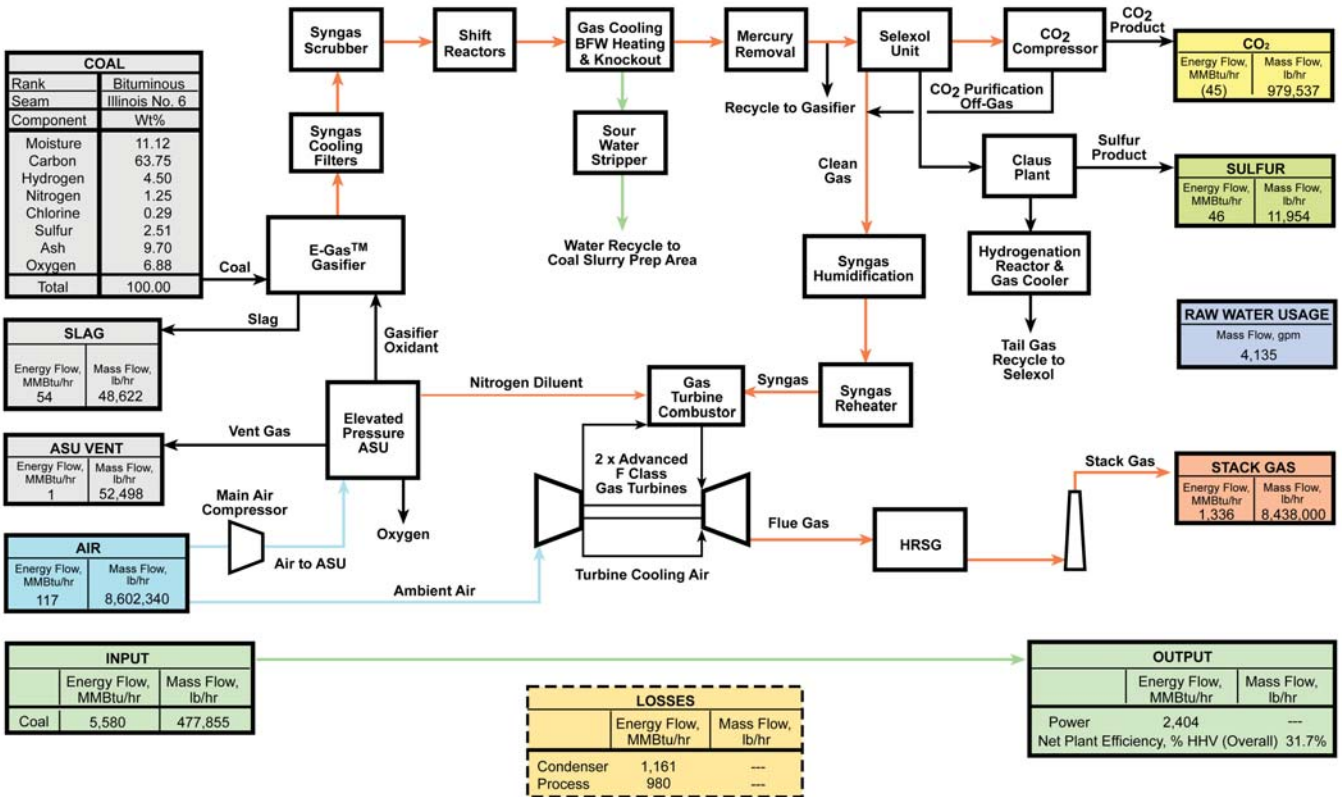

Note: Diagram is provided for general reference of major flows only. For complete flow information, please refer to the final report.

Technical Description

Table 2. Advanced Gas Turbine Performance[1]

	Advanced F-Class
Net output, MWe	185
Pressure ratio	18.5
Airflow, kg/s (lb/s)	431 (950)
Firing temperature, °C (°F)	>1,371 (>2,500)

[1]At International Standards Organization conditions firing natural gas. Performance information for syngas firing is not available.

The plant uses an improved version of the CoP gasification technology, which is currently in operation at the PSI Energy Inc. 265 MWe Wabash River IGCC plant near West Terre Haute, IN. All technology selected for the plant design is assumed to be available to facilitate a 2010 startup date for a newly constructed plant. However, because certain processes like the combustion turbine operating on a high-hydrogen content syngas and the two-stage Selexol process for CO_2 capture either have no commercial or limited commercial operating experience, a process contingency was included in those cost items. A summary of performance for the advanced F-Class combustion turbines for the CoP IGCC plant with CCS is presented in Table 2.

Two gasification trains process a total of 5,735 tons of coal per day. A slurry (63 percent by weight coal) is transferred from the slurry storage tank to the two-stage gasifier with a 78/22 split to the primary and secondary stages. Oxygen (O_2) is produced in a cryogenic air separation unit. The coal slurry and O_2 react in the gasifier at about 4.2 MPa (615 psia) at a high temperature (averaging 1,371°C [2,500°F]), while the portion of slurry injected into the second stage quenches the reaction by means of endothermic gasification reactions.

Gas leaving the gasifier is cooled in a fire-tube syngas cooler producing high-pressure steam. The cooled gas is cleaned of particulate matter (PM) via a cyclone collector followed by a ceramic candle filter. The raw syngas is then further cooled before being cleaned in a spray scrubber to remove remaining particulates and trace components. The syngas goes through a mercury (Hg) removal bed in which 95 percent of the Hg is removed from the syngas with activated carbon. Hydrogen sulfide (H_2S) is removed from the cool, particulate-free gas stream with a Selexol acid gas removal (AGR) system. Elemental sulfur is recovered in a Claus bypass-type sulfur recovery unit utilizing oxygen instead of air. The Claus plant produces molten sulfur by converting about one-third of the H_2S in the feed to sulfur dioxide (SO_2), then reacting the H_2S and SO_2 to produce sulfur and water.

To capture CO_2, a WGS reactor containing a series of three shifts with intercooled stages, converts a nominal 98 percent of the carbon monoxide to CO_2. Carbon dioxide is removed from the cool, particulate-free gas stream with Selexol solvent. The double-absorber Selexol process preferentially removes H_2S as a product stream, leaving CO_2 as a separate product stream. The CO_2 is dried and compressed to 15.3 MPa (2,215 psia) for subsequent pipeline transport. The compressed CO_2 is transported via pipeline to a geologic sequestration field for injection into a saline aquifer, which is located within 50 miles of the plant.

Table 3. Plant Electrical Generation

	Electrical Summary
Advanced gas turbine x 2, MWe	464.0
Steam turbine, MWe	229.8
Gross power output, MWe	693.8
Auxiliary power requirement, MWe	(175.6)
Net power output, MWe	518.2

A Brayton cycle, fueled by the syngas, is used in conjunction with a conventional subcritical steam Rankine cycle for combined-cycle power generation. Two HRSGs and a steam turbine, operating at 12.4 MPa/538°C/538°C (1,800 psig/1,000°F/1,000°F) form the combined-cycle generation component of the plant. The two cycles are integrated by generation of steam in the HRSGs, by feedwater heating in the HRSGs, and by heat recovery from the IGCC process (syngas cooler). The plant produces a net output of 518 MWe. The summary of plant electrical generation performance is presented in Table 3. This configuration results in a net plant efficiency of 31.7 percent HHV, or a net plant HHV heat rate of 10,757 Btu/kWh.

Environmental Performance

The environmental specifications for a greenfield IGCC plant are based on the Electric Power Research Institute *CoalFleet User Design Basis for Coal-Based IGCC Plants* specification. Low SO_2 emissions (less than 3 ppmv in the flue gas) are achieved by capture of the sulfur in the Selexol AGR process, which removes 99 percent of the sulfur in the fuel gas to less than 22 ppmv. The resulting H_2S-rich regeneration gas from the acid gas removal system is fed to a Claus plant, producing elemental sulfur. Nitrogen oxides (NOx) emissions are limited by nitrogen dilution (primarily) and syngas humidification (secondarily) to 15 ppmvd (as nitrogen dioxide at 15 percent O_2). Filterable PM discharge to the atmosphere is limited by a cyclone and a barrier filter in addition to the syngas scrubber and the gas-washing effect of the AGR absorber. Ninety-five percent of the Hg is captured from the syngas by an activated carbon bed. About eighty-eight percent of the CO_2 from the syngas is captured in the AGR system and compressed for shipment and sequestration.

A summary of the resulting air emissions for the CoP IGCC plant with CCS is presented in Table 4.

Table 4. Air Emissions Summary @ 80% Capacity Factor

Pollutant	CoP IGCC With CCS (90%)
CO_2	
• tons/year	460,175
• lb/MMBtu	23.6
• cost of CO_2 avoided ($/ton)	41
SO_2	
• tons/year	167
• lb/MMBtu	0.0085
NOx	
• tons/year	972
• lb/MMBtu	0.050
PM (filterable)	
• tons/year	139
• lb/MMBtu	0.0071
Hg	
• tons/year	0.011
• lb/TBtu	0.571

Cost Estimation

Plant size, primary/secondary fuel type, construction time, total plant cost (TPC) basis year, plant CF, plant heat rate, fuel cost, plant book life, and plant in-service date were used to develop capital cost, production cost, and levelized cost-of-electricity (LCOE) estimates. Costs for the plant were based on adjusted vendor-furnished and actual cost data from recent design/build projects. Values for financial assumptions and a cost summary are shown in Table 5.

Project contingencies were added to each case to cover project uncertainty and the cost of any additional equipment that could result from detailed design. The project contingencies represent costs that are expected to occur. Project contingency was 13.7 percent of the CoP IGCC with CCS case TPC.

Process contingency is intended to compensate for uncertainties arising as a result of the state of technology development. Process contingencies represent 4.3 percent of the CoP IGCC with CCS case TPC and have been applied to the estimates as follows:

- Gasifiers and Syngas Coolers – 15 percent on all IGCC cases.
- Two Stage Selexol – 20 percent on all IGCC CCS cases.
- Mercury Removal – 5 percent on all IGCC cases.
- Combustion Turbine Generator –10 percent on all IGCC cases with CCS.
- Instrumentation and Controls – 5 percent on all IGCC cases.

This study assumes that each new plant would be dispatched any time it is available and would be capable of generating maximum capacity when online. Therefore, CF is assumed to equal availability and is 80 percent for IGCC cases.

The calculated cost of transport, storage, and monitoring for CO_2 is $4.40/short ton, which adds 4.1 mills/kWh to the LCOE.

The 518 MWe (net) CoP IGCC plant with CCS was projected to have a TPC of $2,431/kWe, resulting in a 20-year LCOE of 105.7 mills/kWh.

Table 5. Major Financial Assumptions and Resulting Cost Summary[1]

Major Assumptions					
Case:	**1x518 MWe net CoP IGCC with CCS**				
Plant Size:	518.2	(MWe, net)	Heat Rate:	10,757	(Btu/kWh)
Primary/Secondary Fuel (type):	Illinois #6 Coal		Fuel Cost:	1.80	($/MMBtu)
Construction Duration:	3	(years)	Plant Life:	30	(years)
Total Plant Cost[2] Year:	2007	(January)	Plant in Service:	2010	(January)
Capacity Factor:	80	(%)	Capital Charge Factor:	17.5	(%)
Resulting Capital Investment (Levelized 2007 dollars)					**Mills/kWh**
Total Plant Cost					60.7
Resulting Operating Costs (Levelized 2007 dollars)[3]					**Mills/kWh**
Fixed Operating Cost					7.6
Variable Operating Cost					9.9
Resulting Fuel Cost (Levelized 2007 dollars) @ $1.80 / MMBtu					**Mills/kWh**
					23.3
Resulting Levelized CO_2 Cost (2007 dollars)					**Mills/kWh**
					4.1
Total Levelized Busbar Cost of Power (2007 dollars)					**Mills/kWh**
					105.7

[1]Costs shown can vary ± 30%.

[2]Total plant cost includes all equipment (complete with initial chemical and catalyst loadings), materials, labor (direct and indirect), engineering and construction management, and contingencies (process and project). Owner's costs are not included.

[3]No credit taken for by-product sales.

Contacts

Julianne M. Klara
Senior Analyst
National Energy Technology Laboratory
626 Cochrans Mill Road
P.O. Box 10940
Pittsburgh, PA 15236
412-386-6089
julianne.klara@netl.doe.gov

John G. Wimer
Systems Analysis Team Lead
National Energy Technology Laboratory
3610 Collins Ferry Road
P. O. Box 880
Morgantown, WV 26507
304-285-4124
john.wimer@netl.doe.gov

Reference: Cost and Performance Baseline for Fossil Energy Plants, Vol. 1, DOE/NETL-2007/1281, May 2007.

B_IG_CoP_CCS_051507

Shell IGCC Plant

Plant Overview

This analysis is based on a 636 MWe (net power output) Integrated Gasification Combined-Cycle (IGCC) plant using Shell Global Solutions gasification technology located at a greenfield site in the midwestern United States. Two pressurized dry-feed entrained flow gasification trains feed two advanced F-Class combustion turbines. Two heat recovery steam generators (HRSGs) and one steam turbine provide additional power. The combination process and heat and mass balance diagram for the Shell IGCC plant is shown in Figure 1. The primary fuel is an Illinois No. 6 bituminous coal with a higher heating value (HHV) of 11,666 Btu/lb. The capacity factor (CF) for the plant is 80 percent without sparing of major train components. A summary of plant performance data for the Shell IGCC plant is presented in Table 1.

Table 1. Plant Performance Summary

Plant Type	Shell IGCC
Carbon capture	No
Net power output (kWe)	635,850
Net plant HHV efficiency (%)	41.1
Primary fuel (type)	Illinois No. 6 coal
Levelized cost-of-electricity (mills/kWh) @ 80% capacity factor	80.5
Total plant cost ($ x 1,000)	$1,256,810

Figure 1. Process Flow Diagram
Shell IGCC

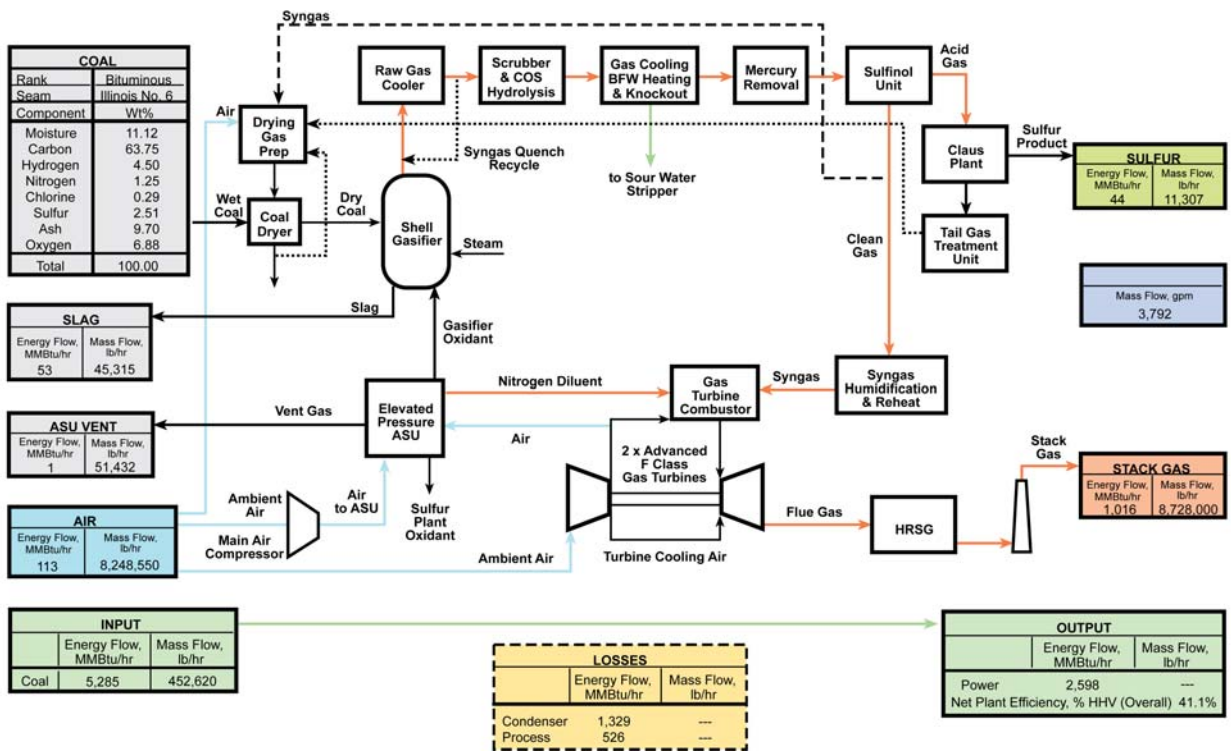

Note: Diagram is provided for general reference of major flows only. For complete flow information, please refer to the final report.

Technical Description

The plant uses the Shell gasification technology. All technology selected in this plant design is assumed to be available to facilitate a 2010 startup date for a newly constructed plant. A summary of performance for the advanced F-Class combustion turbine for the Shell IGCC plant is presented in Table 2.

Table 2. Advanced Gas Turbine Performance[1]

	Advanced F-Class
Net output, MWe	185
Pressure ratio	18.5
Airflow, kg/s (lb/s)	431 (950)
Firing temperature°C (°F)	>1,371 (>2,500)

[1] At International Standards Organization conditions firing natural gas. Performance information for syngas firing is not available.

Two gasification trains process a total of 5,431 tons of coal per day. Dry coal is introduced to the gasifier via lockhoppers. Oxygen (O_2) is produced in a cryogenic air separation unit. The coal reacts with O_2 at about 1,427°C (2,600°F) to produce medium heating value syngas. The syngas is then quenched to around 891°C (1,635°F) by cooled recycled syngas. The syngas passes through a convective cooler and leaves at a temperature near 316°C (600°F). High-pressure saturated steam is generated in the syngas cooler and is joined with the main steam supply. The syngas passes through a cyclone and a raw gas candle filter where a majority of the fine particles are removed. The ash that is not carried out with the gas forms slag and runs down the interior walls, exiting the gasifier in liquid form.

The raw syngas then enters a scrubber for removal of chlorides and remaining particulate matter (PM). Following the scrubber, the raw syngas is reheated to 177°C (350°F) and fed to a Carbonyl Sulfide (COS) hydrolysis reactor where COS is catalytically converted to Hydrogen Sulfide (H_2S). The syngas is then cooled to about 35°C (95°F) before passing through a carbon bed to remove ninety five percent of the Hg. The Sulfinol process then removes essentially all of the CO_2 along with the H_2S and COS. Elemental sulfur is recovered in a Claus bypass-type sulfur recovery unit utilizing O_2 instead of air. The Claus plant produces molten sulfur by converting about one-third of the H_2S in the feed to sulfur dioxide (SO_2), then reacting the H_2S and SO_2 to produce sulfur and water.

A Brayton cycle fueled with syngas is used in conjunction with a conventional subcritical steam Rankine cycle. Nitrogen dilution (primarily), syngas humidification (secondarily) and steam injection to a lesser extent aid in minimizing formation of nitrogen oxides (NOx) during combustion in the gas turbine burner section. Two HRSGs and a steam turbine, operating at 12.4 MPa/566°C/566°C (1,800 psig/1,050°F/1,050°F), form the combined-cycle generation component of the plant. The two cycles are integrated by generation of steam in the HRSG, by feedwater heating in the HRSG, and by heat recovery from the IGCC process (convective syngas cooler). The plant produces a net output of 636 MWe. The summary of plant electrical generation performance is presented in Table 3. This configuration results in a net plant efficiency of 41.1 percent (HHV basis) or a net plant HHV heat rate of 8,304 Btu/kWh.

Table 3. Plant Electrical Generation

	Electrical Summary
Advanced gas turbine x 2, MWe	464.0
HRSG steam turbine, MWe	284.0
Gross power output, MWe	748.0
Auxiliary power requirement, MWe	(112.2)
Net power output, MWe	635.9

Environmental Performance

The environmental specifications for a greenfield IGCC plant are based on the Electric Power Research Institute *CoalFleet User Design Basis for Coal-Based IGCC Plants* specification. Low SO_2 emissions (less than 4 ppmv in the flue gas) are achieved by capture of the sulfur in the Sulfinol-M AGR process, which removes over 99 percent of the sulfur in the fuel gas. The resulting hydrogen sulfide-rich regeneration gas from the AGR system is fed to a Claus plant, producing elemental sulfur. Nitrogen oxides emissions are limited by syngas humidification and nitrogen dilution in the gas turbine combustor to 15 ppmvd (as nitrogen oxides at 15 percent O_2). Filterable

PM discharge to the atmosphere is limited by the use of a cyclone and a barrier filter in addition to the syngas scrubber and the gas washing effect of the AGR absorber. Ninety-five percent of the Hg is captured from the syngas by an activated carbon bed.

A summary of the resulting air emissions for the Shell IGCC plant is presented in Table 4.

Table 4. Air Emissions Summary @ 80% Capacity Factor

Pollutant	Shell IGCC Without CCS
CO_2	
• tons/year	3,693,990
• lb/MMBtu	200
• cost of CO_2 avoided ($/ton)	N/A
SO_2	
• tons/year	230
• lb/MMBtu	0.0124
NOx	
• tons/year	1,082
• lb/MMBtu	0.058
PM (filterable)	
• tons/year	131
• lb/MMBtu	0.0071
Hg	
• tons/year	0.011
• lb/TBtu	0.571

Cost Estimation

Plant size, primary/secondary fuel type, construction time, total plant cost (TPC) basis year, plant CF, plant heat rate, fuel cost, plant book life, and plant in-service date were used as inputs to develop capital cost, production cost, and levelized cost-of-electricity (LCOE) estimates. Costs for the plant were based on adjusted vendor-furnished and actual cost data from recent design/build projects. Values for financial assumptions and a cost summary are shown in Table 5.

Project contingencies were added to each case to cover project uncertainty and the cost of any additional equipment that could result from detailed design. The project contingencies represent costs that are expected to occur. Project contingency was 13.7 percent of the Shell IGCC case TPC.

Process contingency is intended to compensate for uncertainties arising as a result of the state of technology development. Process contingencies represent 2.6 percent of the Shell IGCC case TPC and have been applied to the estimates as follows:

- Gasifiers and Syngas Coolers – 15 percent on all IGCC cases.
- Mercury Removal – 5 percent on all IGCC cases.
- Combustion Turbine Generator – 5 percent on all IGCC cases without CCS.
- Instrumentation and Controls – 5 percent on all IGCC cases.

This study assumes that each new plant would be dispatched any time it is available and would be capable of generating maximum capacity when online. Therefore, CF is assumed to equal availability and is 80 percent for IGCC cases.

The 636 MWe (net) Shell IGCC plant was projected to have a total capital requirement of $1,977/kWe, resulting in a 20-year LCOE of 80.5 mills/kWh.

Table 5. Major Financial Assumptions and Resulting Cost[1]

Major Assumptions					
Case:	**1x636 MWe net Shell IGCC**				
Plant Size:	635.9	(MWe, net)	Heat Rate:	8,304	(Btu/kWh)
Primary/Secondary Fuel (type):	Illinois #6 Coal		Fuel Cost:	1.80	($/MMBtu)
Construction Duration:	3	(years)	Plant Life:	30	(years)
Total Plant Cost[2] Year:	2007	(January)	Plant in Service:	2010	(January)
Capacity Factor:	80	(%)	Capital Charge Factor:	17.5	(%)
Resulting Capital Investment (Levelized 2007 dollars)					**Mills/kWh**
Total Plant Cost					49.4
Resulting Operating Costs (Levelized 2007 dollars)[3]					**Mills/kWh**
Fixed Operating Cost					5.8
Variable Operating Cost					7.3
Resulting Fuel Cost (Levelized 2007 dollars) @ $1.80 / MMBtu					**Mills/kWh**
					18.0
Total Levelized Busbar Cost of Power (2007 dollars)					**Mills/kWh**
					80.5

[1]Costs shown can vary ± 30%.

[2]Total plant cost includes all equipment (complete with initial chemical and catalyst loadings), materials, labor (direct and indirect), engineering and construction management, and contingencies (process and project). Owner's costs are not included.

[3]No credit taken for by-product sales.

Contacts

Julianne M. Klara
Senior Analyst
National Energy Technology Laboratory
626 Cochrans Mill Road
P.O. Box 10940
Pittsburgh, PA 15236
412-386-6089
julianne.klara@netl.doe.gov

John G. Wimer
Systems Analysis Team Lead
National Energy Technology Laboratory
3610 Collins Ferry Road
P. O. Box 880
Morgantown, WV 26507
304-285-4124
john.wimer@netl.doe.gov

Reference: Cost and Performance Baseline for Fossil Energy Plants, Vol. 1, DOE/NETL-2007/1281, May 2007.

B_IG_Shell_051507

Shell IGCC Plant With Carbon Capture & Sequestration

Plant Overview

This analysis is based on a 517 MWe (net power output) Integrated Gasification Combined-Cycle (IGCC) plant using Shell Global Solutions gasification technology located at a greenfield site in the midwestern United States. The plant utilizes carbon capture and sequestration (CCS). Two pressurized, dry-feed, entrained–flow gasification trains feed two advanced F-Class combustion turbines. A quench reactor is utilized to provide a portion of the water required for the water gas shift. Two heat recovery steam generators (HRSGs) and one steam turbine provide additional power. Carbon dioxide (CO_2) is removed with the two-stage Selexol physical solvent process. The combination process and heat and mass balance diagram for the Shell IGCC plant with CCS is shown in Figure 1. The primary fuel is an Illinois No. 6 bituminous coal with a higher heating value (HHV) of 11,666 Btu/lb. The capacity factor (CF) for the plant is 80 percent without sparing of major train components. A summary of plant performance data for the Shell IGCC plant with CCS is presented in Table 1.

Table 1. Plant Performance Summary

Plant Type	Shell IGCC
Carbon capture	Yes
Gross power output (kWe)	517,135
Net plant HHV efficiency (%)	32.0
Primary fuel (type)	Illinois No. 6 coal
Levelized cost-of-electricity (mills/kWh) @ 80% capacity factor	110.4
Total plant cost ($ x 1,000)	$1,379,524
Cost of CO_2 avoided[1] ($/ton)	42

[1] The cost of CO_2 avoided is defined as the difference in the 20-year levelized cost-of-electricity between controlled and uncontrolled like cases, divided by the difference in CO_2 emissions in kg/MWh.

Figure 1. Process Flow Diagram
Shell IGCC with CCS

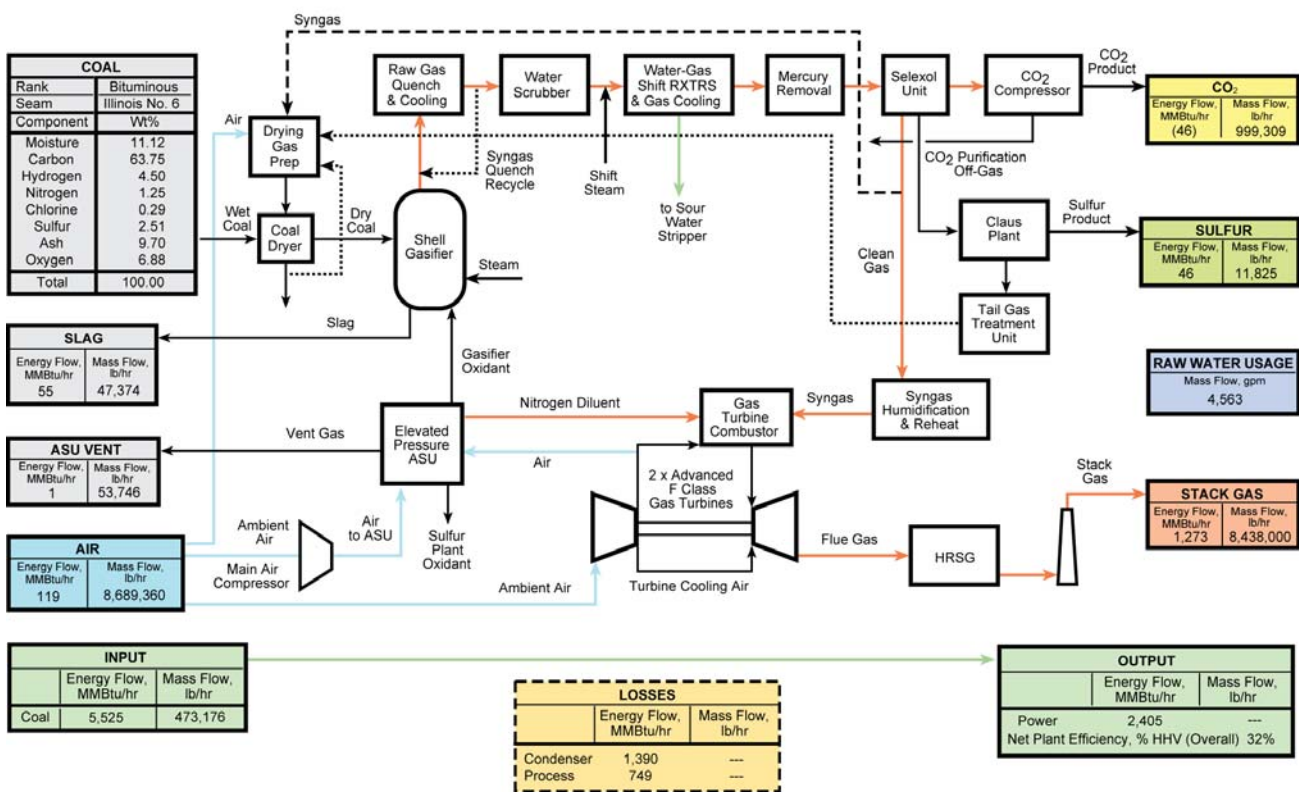

Note: Diagram is provided for general reference of major flows only. For complete flow information, please refer to the final report.

Technical Description

The plant uses the Shell gasification technology. All technology selected for the plant design is assumed to be available to facilitate a 2010 startup date for a newly constructed plant. However, because certain processes like the combustion turbine operating on a high-hydrogen content syngas and the two-stage Selexol process for CO_2 capture either have no commercial or limited commercial operating experience, a process contingency was included in this case. A summary of performance for the Advanced Gas Turbine for the Shell IGCC plant with CCS is presented in Table 2.

Table 2. Advanced Gas Turbine Performance[1]

	Advanced F-Class
Net output, MWe	185
Pressure ratio	18.5
Airflow, kg/s (lb/s)	431 (950)
Firing temperature, °C (°F)	>1,371 (>2,500)

[1]At International Standards Organization conditions firing natural gas. Performance information for syngas firing is not available.

Two gasification trains process a total of 5,678 tons of coal per day. Dry coal is introduced to the gasifier via lockhoppers. Oxygen (O_2) is produced in a cryogenic air separation unit. Coal, steam, and O_2 react in the gasifier at about 4.2 MPa (615 psia) at a temperature of 1,427°C (2,600°F) to produce syngas. The gas from the gasifier is quenched to 399°C (750°F) with water to provide a portion of the water required for water-gas-shift (WGS) reactions. The syngas passes through a cyclone and a raw gas candle filter where a majority of the fine particles are removed. The ash that is not carried out with the gas forms slag and runs down the interior walls, exiting the gasifier in liquid form.

The raw syngas is cooled to 260°C (500°F) and then enters a scrubber for removal of chlorides and remaining particulate matter (PM). Following the scrubber, the raw syngas is reheated to 285°C (545°F) and fed through two sour gas shift reactors for converting carbon monoxide (CO) to CO_2 and also hydrolyzing Carbonyl Sulfide (COS), eliminating the need for a separate COS hydrolysis reactor. The syngas is then cooled to about 35°C (95°F) before passing through a carbon bed to remove ninety-five percent of the Hg.

To capture CO_2, a WGS reactor containing a series of two shifts with inter-cooled stages, converts a nominal 96 percent of the CO to CO_2. Carbon dioxide is removed from the cool, particulate-free gas stream with Selexol solvent. The dual-absorber Selexol acid gas removal (AGR) process preferentially removes hydrogen sulfide (H_2S) as a product stream, leaving CO_2 as a separate product stream. Elemental sulfur is recovered in a Claus bypass-type sulfur recovery unit utilizing oxygen instead of air. The CO_2 is dried and compressed to 15.3 MPa (2,215 psia) for subsequent pipeline transport and sequestration. The compressed CO_2 is transported via pipeline to a geologic sequestration field for injection into a saline aquifer, which is located within 50 miles of the plant.

Table 3. Plant Electrical Generation

	Electrical Summary
Advanced gas turbine x 2, MWe	463.6
Steam turbine, MWe	229.9
Gross power output, MWe	693.5
Auxiliary power requirement, MWe	(176.4)
Net power output, MWe	517.1

A Brayton cycle, fueled by the syngas, is used in conjunction with a conventional subcritical steam Rankine cycle for combined cycle power generation. The two cycles are integrated by generation of steam in the HRSGs, by feedwater heating in the HRSGs, and by heat recovery from the IGCC process. The steam turbine operates at 12.4 MPa/538°C/538°C (1,800 psig/1,000 °F/1,000°F). The plant produces a net output of 517 MWe. The summary of plant electrical generation performance is presented in Table 3. This plant configuration results in a net plant efficiency of 32.0 percent HHV, or a net plant HHV heat rate of 10,674 Btu/kWh.

Environmental Performance

The environmental specifications for a greenfield IGCC plant are based on the Electric Power Research Institute *CoalFleet User Design Basis for Coal-Based IGCC Plants* specification. Low sulfur dioxide (SO_2) emissions (less than 3 ppmv in the flue gas) are achieved by capture of the sulfur in the two-stage Selexol acid gas removal (AGR) process, which removes over 99 percent of the sulfur in the fuel gas. The resulting H_2S-rich regeneration gas from the AGR system is fed to a Claus plant, producing elemental sulfur. Nitrogen oxides (NOx) emissions are limited by nitrogen dilution (primarily) and syngas humidification (secondarily) in the gas turbine combustor to 15 ppmvd (as nitrogen oxide at 15 percent O_2). Filterable PM discharge to the atmosphere is limited to extremely low values by the use of a cyclone and a barrier filter in addition to the syngas scrubber and the gas-washing effect of the AGR absorber. Ninety-five percent of the Hg is captured from the syngas by an activated carbon bed. Approximately 90 percent of the CO_2 from the syngas is captured in the AGR system and compressed for pipeline transport and sequestration.

A summary of the resulting air emissions for the Shell IGCC plant with CCS is presented in Table 4.

Table 4. Air Emissions Summary @ 80% Capacity Factor

Pollutant	Shell IGCC with CCS (90%)
CO_2	
• tons/year	361,056
• lb/MMBtu	18.7
• cost of CO_2 avoided ($/ton)	42.0
SO_2	
• tons/year	204
• lb/MMBtu	0.0105
NOx	
• tons/year	944
• lb/MMBtu	0.049
PM (filterable)	
• tons/year	137
• lb/MMBtu	0.0071
Hg	
• tons/year	0.011
• lb/TBtu	0.571

Cost Estimation

Plant size, primary/secondary fuel type, construction time, total plant cost (TPC) basis year, plant CF, plant heat rate, fuel cost, plant book life, and plant in-service date were used as inputs to develop capital cost, production cost, and levelized cost-of-electricity (LCOE) estimates. Costs for the plant were based on adjusted vendor-furnished and actual cost data from recent design/build projects. Values for financial assumptions and a cost summary are shown in Table 5.

Project contingencies were added to the case to cover project uncertainty and the cost of any additional equipment that could result from detailed design. The project contingencies represent costs that are expected to occur. Project contingency was 14 percent of the Shell IGCC with CCS case TPC.

Process contingency is intended to compensate for uncertainties arising as a result of the state of technology development. Process contingencies represent 3.8 percent of the Shell IGCC with CCS case TPC and have been applied to the estimates as follows:

- Gasifiers and Syngas Coolers – 15 percent on all IGCC cases.
- Two Stage Selexol – 20 percent on all IGCC CCS cases.
- Mercury Removal – 5 percent on all IGCC cases.
- Combustion Turbine Generator – 10 percent on all IGCC cases with CCS.
- Instrumentation and Controls – 5 percent on all IGCC cases.

This study assumes that each new plant would be dispatched any time it is available and would be capable of generating maximum capacity when online. Therefore, CF is assumed to equal availability and is 80 percent for IGCC cases.

The calculated cost of transport, storage, and monitoring for CO_2 is $4.30/short ton, which adds 4.1 mills/kWh to the LCOE.

The 517 (net) MWe Shell IGCC plant with CCS was projected to have a TPC of $2,668/kWe, resulting in a 20-year LCOE of 110.4 mills/kWh.

Table 5. Major Financial Assumptions and Resulting Cost Summary[1]

Major Assumptions					
Case:	**1x517 MWe net Shell IGCC with CCS**				
Plant Size:	517.1	(MWe, net)	Heat Rate:	10,674	(Btu/kWh)
Primary/Secondary Fuel (type):	Illinois #6 Coal		Fuel Cost:	1.80	($/MMBtu)
Construction Duration:	3	(years)	Plant Life:	30	(years)
Total Plant Cost[2] Year:	2007	(January)	Plant in Service:	2010	(January)
Capacity Factor:	80	(%)	Capital Charge Factor:	17.5	(%)
Resulting Capital Investment (Levelized 2007 dollars)					**Mills/kWh**
Total Plant Cost					66.6
Resulting Operating Costs (Levelized 2007 dollars)[3]					**Mills/kWh**
Fixed Operating Cost					7.2
Variable Operating Cost					9.3
Resulting Fuel Cost (Levelized 2007 dollars) @ $1.80 / MMBtu					**Mills/kWh**
					23.2
Resulting Levelized CO_2 Cost (2007 dollars)					**Mills/kWh**
					4.1
Total Levelized Busbar Cost of Power (2007 dollars)					**Mills/kWh**
					110.4

[1]Costs shown can vary ± 30%.

[2]Total plant cost includes all equipment (complete with initial chemical and catalyst loadings), materials, labor (direct and indirect), engineering and construction management, and contingencies (process and project). Owner's costs are not included.

[3]No credit taken for by-product sales.

Contacts

Julianne M. Klara
Senior Analyst
National Energy Technology Laboratory
626 Cochrans Mill Road
P.O. Box 10940
Pittsburgh, PA 15236
412-386-6089
julianne.klara@netl.doe.gov

John G. Wimer
Systems Analysis Team Lead
National Energy Technology Laboratory
3610 Collins Ferry Road
P. O. Box 880
Morgantown, WV 26507
304-285-4124
john.wimer@netl.doe.gov

Reference: Cost and Performance Baseline for Fossil Energy Plants, Vol. 1, DOE/NETL-2007/1281, May 2007.

B_IG_Shell_CCS_051507

Pulverized Bituminous Coal Plants With and Without Carbon Capture & Sequestration

Technology Overview

Four pulverized coal (PC) Rankine cycle power plant configurations fired with bituminous coal were evaluated and the results are presented in this summary sheet. All cases were analyzed using a consistent set of assumptions and analytical tools. Each PC type was assessed with and without carbon capture and sequestration (CCS). The individual configurations are as follows:

- Subcritical PC plant.
- Subcritical PC plant with CCS.
- Supercritical PC plant.
- Supercritical PC plant with CCS.

Each PC plant design is based on a market-ready technology that is assumed to be commercially available in time to support a 2010 startup date. The PC plants are built at a greenfield site in the midwestern United States and are assumed to operate at 85 percent capacity factor (CF) without sparing of major train components. Nominal plant size (gross rating) is 580 MWe without CCS and 670 MWe with CCS. All designs employ a one-on-one configuration comprising a state-of-the-art PC steam generator and a steam turbine. The primary fuel is Illinois No. 6 bituminous coal with a higher heating value (HHV) of 11,666 Btu/lb. The boiler is a dry-bottom, wall-fired unit that employs low-nitrogen oxides burners (LNBs) with over-fire air (OFA) and selective catalytic reduction (SCR) for nitrogen oxides (NOx) control, a wet-limestone forced-oxidation scrubber for sulfur dioxide (SO_2) and mercury (Hg) control, and a fabric filter for particulate matter (PM) control.

The PC cases are evaluated with and without CCS on a common 550 MWe net basis. The designs that include CCS are equipped with the Fluor Econamine Flue Gas (FG) Plus™ process. The CCS cases have a larger gross electrical output to compensate for the higher auxiliary loads. After compression to pipeline specification pressure, the carbon dioxide (CO_2) is assumed to be transported to a nearby underground storage facility for sequestration. The boiler and steam turbine industry ability to match unit size to a custom specification has been commercially demonstrated, enabling common net output comparison of the PC cases in this study.

See Figure 1 for a generic block flow diagram of a PC plant. The orange blocks in the figure represent the unit operations added to the configuration for CCS cases.

Figure 1. Pulverized Coal Power Plant

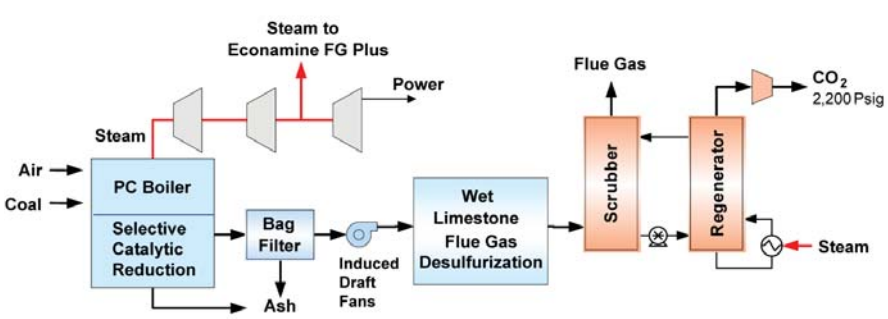

Orange blocks indicate unit operations added for CCS Case.

Particulate matter control: Baghouse achieves 0.013 lb/MMBtu (99.8% removal).

Sulfur oxides control: FGD to achieve 0.085 lb/MMBtu (98% removal).

Nitrogen oxides control: LNB + OFA + SCR to maintain 0.07 lb/MMBtu emissions limit.

Carbon dioxide control: Fluor Econamine FG Plus™ (90% removal).

Hg control: Co-benefit capture for ~90% removal.

Subcritical steam conditions: 2,400 psig/1,050°F/1,050°F.

Supercritical steam conditions: 3,500 psig/1100°F/1,100°F.

Note: Diagram is provided for general reference of major flows only. For complete flow information, please refer to the final report.

Technical Description

Steam conditions for the Rankine cycle cases are based on input from the original boiler and steam turbine equipment manufacturers (OEMs) input on the most advanced steam conditions they would guarantee for a commercial project in the United States with PC units rated at nominal 550 MWe net capacity firing Illinois No. 6 coal. The input from the OEMs resulted in the following single-reheat steam conditions:

- For subcritical cases – 16.5 MPa/566°C/566°C (2,400 psig/1,050°F/1,050°F).
- For supercritical cases – 24.1 MPa/593°C/593°C (3,500 psig/1,100°F/1,100°F).

Recirculating evaporative cooling systems are used for cycle heat rejection. The average efficiency of the cases without CCS is almost 38 percent (HHV basis) for a plant with a nominal gross rating of 580 MWe.

The CCS cases require a significant amount of auxiliary power and extraction steam for the process, which reduces the output of the steam turbine. This requires a higher nominal gross plant output for the CCS cases of about 670 MWe for an average net plant efficiency of 26 percent (HHV basis).

The designs that include CCS are equipped with the Fluor Econamine FG Plus™ technology, which removes 90 percent of the CO_2 in the flue gas exiting the flue gas desulfurization (FGD) unit. Once captured, the CO_2 is dried and compressed to 15.3 MPa (2,215 psia). The compressed CO_2 is transported via pipeline to a geologic sequestration field for injection into a saline aquifer, which is located within 50 miles of the plant. Carbon dioxide transport, storage, and monitoring costs are included in the analyses.

Table 1. Fuel Analysis

Rank	Bituminous	
Seam	Illinois No. 6 (Herrin)	
Source	Old Ben Mine	
Proximate Analysis (weight %)[1]		
	As received	Dry
Moisture	11.12	0.00
Ash	9.70	10.91
Volatile matter	34.99	39.37
Fixed carbon	44.19	49.72
Total	**100.00**	**100.00**
Sulfur	2.51	2.82
Higher heating value, Btu/lb	11,666	13,126
Lower heating value, Btu/lb	11,252	12,712

[1]The above proximate analysis assumes sulfur as a volatile matter.

Fuel Analysis and Costs

The design coal characteristics are presented in Table 1. All PC cases were modeled with Illinois No. 6 coal.

A cost of $1.80/MMBtu (January 2007 dollars) was determined from the Energy Information Administration AEO2007 for an eastern interior high-sulfur bituminous coal.

Environmental Design Basis

The environmental approach for this study was to evaluate each of the PC cases on the same regulatory design basis. The environmental specifications for a greenfield PC plant are based on Best Available Control Technology (BACT), which exceed New Source Performance Standard (NSPS) requirements. Table 2 provides details of the environmental design basis for PC plants built at a midwestern U.S. location. The emissions controls assumed for each of the four PC cases are as follows:

Table 2. Environmental Targets

Pollutant	PC[1]
SO_2	0.085 lb/MMBtu
NOx	0.07 lb/MMBtu
PM (filterable)	0.013 lb/MMBtu
Hg	1.14 lb/TBtu

[1]Based on BACT and NSPS.

- A wet-limestone FGD system was used for sulfur control and also provided co-benefit Hg removal.
- Low-NOx burners with OFA in conjunction with an SCR unit were used for NOx control.

- Fabric filter was used for PM control.
- Econamine FG Plus™ was used for CO_2 capture in the CCS cases.

Major Economic and Financial Assumptions

For the PC cases, capital cost, production cost, and levelized cost-of-electricity (LCOE) estimates were developed for each plant based on adjusted vendor-furnished and actual cost data from recent design/build projects and resulted in determination of a revenue-requirement 20-year LCOE based on the power plant costs and assumed financing structure. Listed in Table 3 are the major economic and financial assumptions for the four PC cases.

Table 3. Major Economic and Financial Assumptions for PC Cases

Major Economic Assumptions	
Capacity factor	85%
Costs per year, constant U.S. dollars	2007 (January)
Illinois No. 6 delivered cost	$1.80/MMBtu
Construction duration	3 years
Plant startup date	2010 (January)
Major Financial Assumptions	
Depreciation	20 years
Federal income tax	34%
State income tax	6%
Low risk cases	
After-tax weighted cost of capital	8.79%
Capital structure:	
Common equity	50% (Cost = 12%)
Debt	50% (Cost = 9%)
Capital charge factor	16.4%
High risk cases	
After-tax weighted cost of capital	9.67%
Capital structure:	
Common equity	55% (Cost = 12%)
Debt	45% (Cost = 11%)
Capital charge factor	17.5%

Project contingencies were added to each of the cases to cover project uncertainty and the cost of any additional equipment that could result from detailed design. The project contingencies represent costs that are expected to occur. Project contingency was about 11 percent for the PC cases without CCS and roughly 12.5 percent for the PC cases with CCS.

Process contingency is intended to compensate for uncertainties arising as a result of the state of technology development. Process contingencies have been applied to the estimates as follows:

- CO_2 Removal System – 20 percent on all PC CCS cases.
- Instrumentation and Controls – 5 percent on the PC CCS cases.

This study assumes that each new plant would be dispatched any time it is available and would be capable of generating maximum capacity when online. Therefore, CF is assumed to equal availability and is 85 percent for PC cases.

For the PC cases that feature CCS, capital and operating costs were estimated for transporting CO_2 to an underground storage field, associated storage in a saline aquifer, and for monitoring beyond the expected life of the plant. These costs were then levelized over a 20-year period.

Results

An analysis of the four PC cases is presented in the following sections.

Capital Cost

The total plant cost (TPC) for each of the four PC cases is compared in Figure 2. The TPC includes all equipment (complete with initial chemical and catalyst loadings), materials, labor (direct and indirect), engineering and construction management, and contingencies (process and project). Owner's costs are not included.

Figure 2. Comparison of TPC for the Four PC Cases

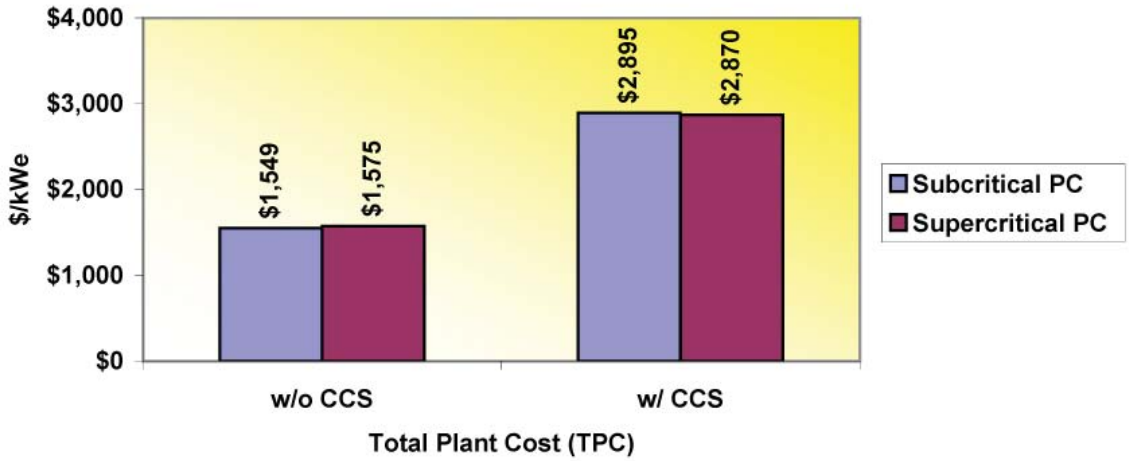

All costs are in January 2007 U.S. dollars.

The results of the analysis indicate that the supercritical PC cases and the subcritical PC cases are nearly the same capital cost. With CCS, the TPC increases by roughly 85 percent for both subcritical and supercritical cases, resulting in very similar capital costs of almost $2,900/kWe.

Efficiency

The net plant HHV efficiencies for the four PC cases are compared in Figure 3. This analysis indicates that the supercritical plant efficiency of 39.1 percent (HHV basis) is 2 percentage points higher than the subcritical case. With CCS, the efficiency penalty is a 12 percentage point drop in both subcritical and supercritical plants, resulting in an efficiency of about 25 percent (HHV basis) for the subcritical case, with the supercritical case being about 2 percentage points higher.

Figure 3. Comparison of Net Plant Efficiency for the Four PC Cases

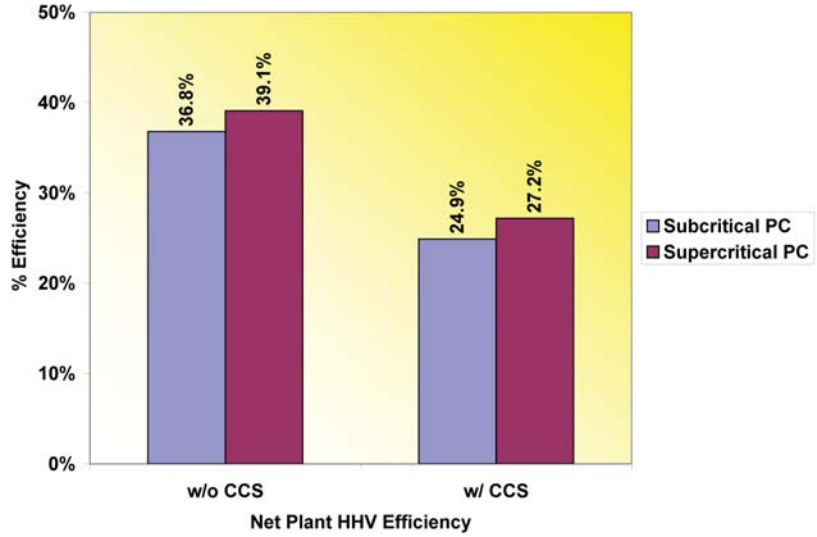

Levelized Cost-of-Electricity

The LCOE is a measurement of the coal-to-busbar cost of power, and includes the TPC, fixed and variable operating costs, and fuel costs levelized over a 20-year period. The calculated cost of transport, storage, and monitoring for CO_2 is about $3.40/short ton, which adds roughly 4 mills to the LCOE.

Figure 4. Comparison of Levelized Cost-of-Electricity for the Four PC Cases

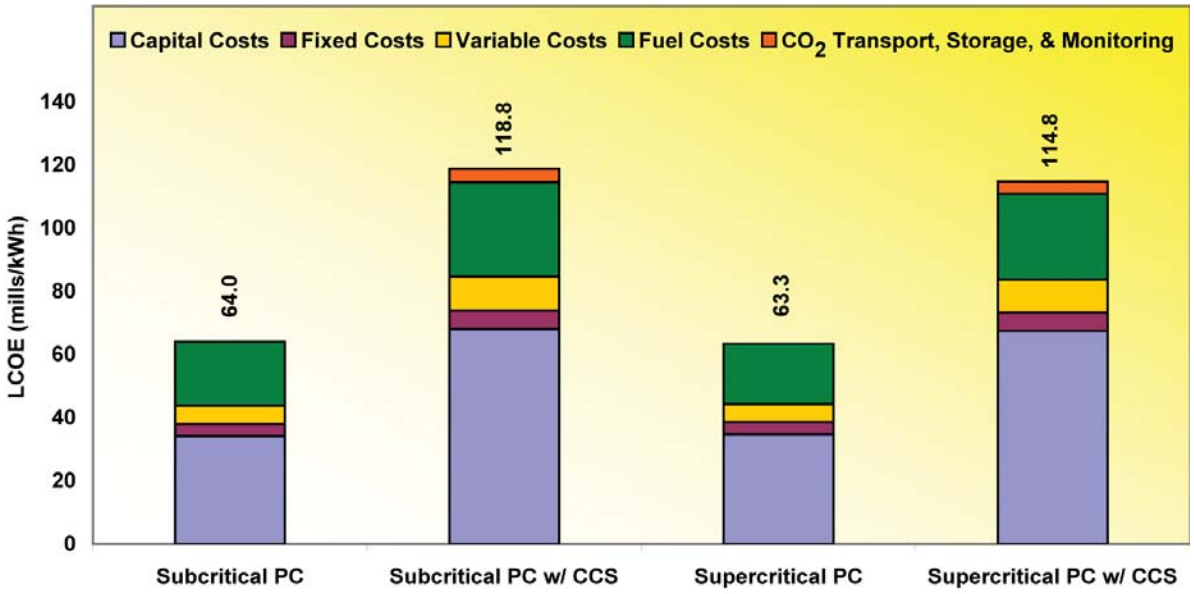

All costs are in January 2007 U.S. dollars.

The PC plants generate power at an LCOE of about 64 mills/kWh at a CF of 85 percent. When CCS is included, the increased TPC and reduced efficiency result in a higher LCOE of roughly 117 mills/kWh.

Environmental Impacts

Table 4 provides a comparative summary of emissions from the four PC cases. Mass emission rates and cumulative annual totals are given for SO_2, NOx, PM, Hg, and CO_2. Additionally, plant water usage is shown.

The emissions from all four PC cases evaluated meet or exceed BACT and NSPS requirements. The CO_2 is reduced by 90 percent in the capture cases, resulting in emissions of less than 570,000 tons/year. The cost of CO_2 avoided is about $68/ton. The cost of CO_2 avoided is defined as the difference in the 20-year LCOE between controlled and uncontrolled like cases, divided by the difference in CO_2 emissions in kg/MWh. Raw water usage in the CCS cases is more than twice that of the cases without CCS primarily because of the large cooling water demand of the Econamine FG Plus™ process.

Table 4. Air Emissions Summary @ 85% Capacity Factor

	Pulverized Coal Boiler			
Pollutant	PC Subcritical		PC Supercritical	
	Without CCS	With CCS (90%)	Without CCS	With CCS (90%)
CO_2				
• tons/year	3,864,884	569,524	3,631,301	516,310
• lb/MMBtu	203	20.3	203	20.3
• cost of avoided CO_2 ($/ton)	—	68	—	68
SO_2				
• tons/year	1,613	Negligible	1,514	Negligible
• lb/MMBtu	0.0848	Negligible	0.0847	Negligible
NOx				
• tons/year	1,331	1,966	1,250	1,784
• lb/MMBtu	0.070	0.070	0.070	0.070
PM (filterable)				
• tons/year	247	365	232	331
• lb/MMBtu	0.0130	0.0130	0.0130	0.0130
Hg				
• tons/year	0.022	0.032	0.020	0.029
• lb/TBtu	1.14	1.14	1.14	1.14
Raw water usage, gpm	6,212	14,098	5,441	12,159

Contacts

Julianne M. Klara
Senior Analyst
National Energy Technology Laboratory
626 Cochrans Mill Road
P.O. Box 10940
Pittsburgh, PA 15236
412-386-6089
julianne.klara@netl.doe.gov

John G. Wimer
Systems Analysis Team Lead
National Energy Technology Laboratory
3610 Collins Ferry Road
P. O. Box 880
Morgantown, WV 26507
304-285-4124
john.wimer@netl.doe.gov

Reference: Cost and Performance Baseline for Fossil Energy Plants, Vol. 1, DOE/NETL-2007/1281, May 2007.
B_PC_051507

Subcritical Pulverized Bituminous Coal Plant

Plant Overview

This analysis is based on a 550 MWe (net power output) subcritical bituminous pulverized coal (PC) plant located at a greenfield site in the midwestern United States. This plant is designed to meet Best Available Control Technology (BACT) emission limits. The plant is a single-train design. The combination process, heat, and mass balance diagram for the subcritical PC plant is shown in Figure 1. The primary fuel is an Illinois No. 6 bituminous coal with a higher heating value (HHV) of 11,666 Btu/lb. The capacity factor (CF) for the plant is 85 percent without sparing of major train components. A summary of plant performance data for the subcritical PC plant is presented in Table 1.

Table 1. Plant Performance Summary

Plant Type	PC Subcritical
Carbon capture	No
Net power output (kWe)	550,445
Net plant HHV efficiency (%)	36.8%
Primary fuel (type)	Illinois No. 6 coal
Levelized cost-of-electricity (mills/kWh) @ 85% capacity factor	64.0
Total plant cost ($ x 1,000)	$852,612

Figure 1. Process Flow Diagram Subcritical Pulverized Coal Unit

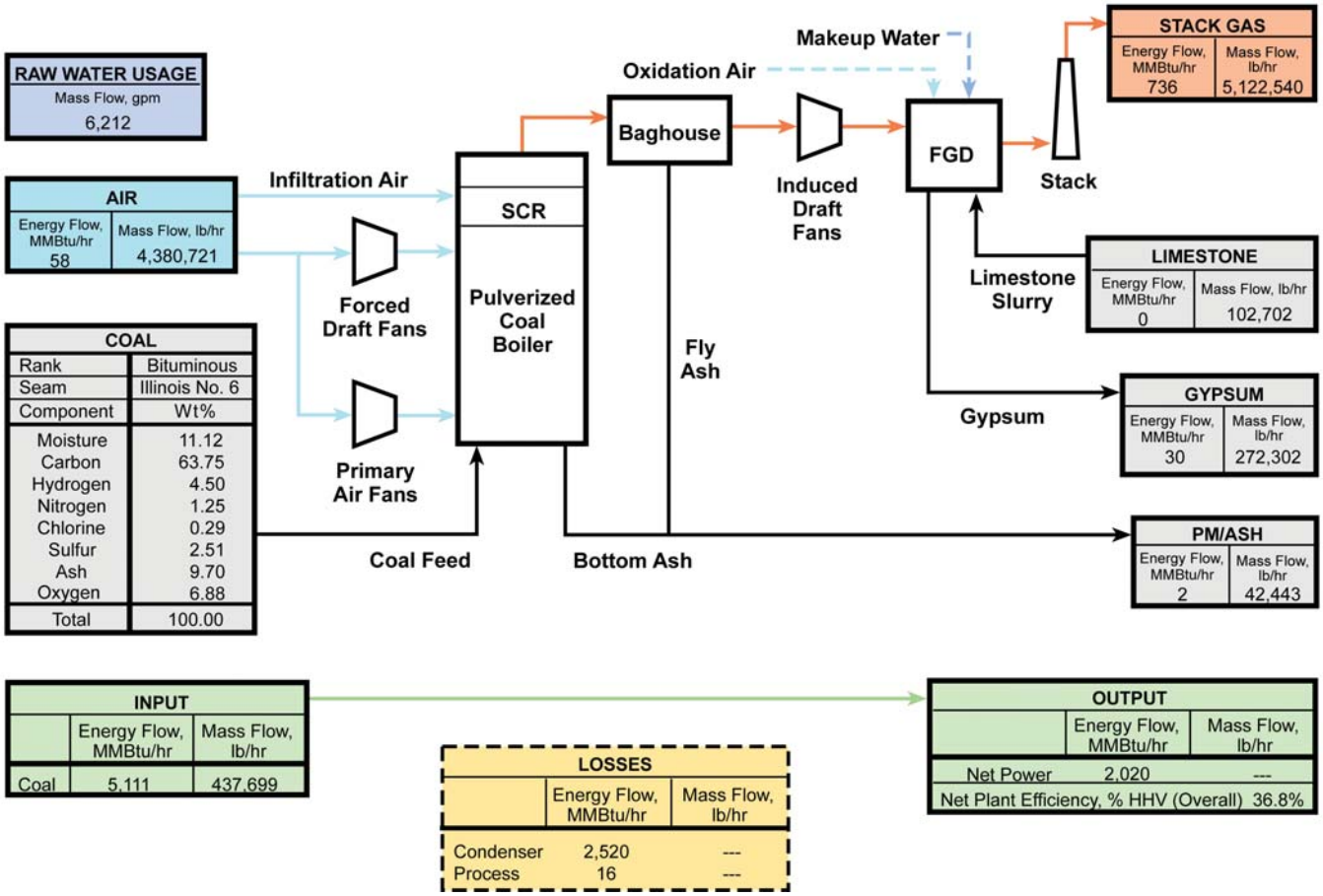

Note: Diagram is provided for general reference of major flows only. For complete flow information, please refer to the final report.

Technical Description

The analysis for the subcritical PC plant is based on a commercially available dry-bottom, wall-fired boiler equipped with low-nitrogen oxides burners (LNBs) and over-fire air (OFA). The unit is a balanced-draft, natural-circulation design equipped with a superheater, reheater, economizer, and air preheater. Hot flue gas exiting the boiler is treated by a selective catalytic reduction (SCR) unit for nitrogen oxides (NOx) removal, a baghouse for particulate matter (PM) removal, and a limestone-based scrubber for sulfur dioxide (SO_2) control and co-removal of mercury (Hg). This plant utilizes a conventional steam turbine for power generation. The Rankine cycle is based on a single reheat system with steam conditions of 16.5 MPa/566°C/566°C (2,400 psig/1,050°F/1,050°F).

Achieving a nominal 550 MWe net output with this plant configuration results in a HHV thermal input requirement of 1,496,479 kWt (5,106 MMBtu/hr basis). This thermal input is achieved by burning coal at a rate of 437,699 lb/hr, which yields an HHV net plant heat rate of 9,276 Btu/kWh (a net plant efficiency of 36.8 percent). The gross power output of 583 MWe is produced from the steam turbine generator. With an auxiliary power requirement of 33 MWe, the net plant output is 550 MWe.

Environmental Performance

This study assumes the use of BACT to meet the emission requirements of the 2006 New Source Performance Standards.

The subcritical PC plant emission control strategy consists of a wet-limestone, forced-oxidation scrubber that achieves a 98 percent removal of SO_2. The byproduct, calcium sulfate, is dewatered and stored onsite. The wallboard-grade material potentially can be marketed and sold, but since it is highly dependent on local market conditions, no byproduct credit is taken. The combination of SCR, a fabric filter and wet scrubber also provides co-benefit. Hg capture at an assumed 90 percent of the inlet value. The saturated flue gas exiting the scrubber is vented through the plant stack. NOx emissions are controlled through the use of LNBs and OFA. An SCR unit then further reduces the NOx concentration by 86 percent. Particulate emissions are controlled using a pulse jet fabric filter, which operates at an efficiency of 99.8 percent.

A summary of the resulting air emissions is presented in Table 2.

Table 2. Air Emissions Summary @ 85% Capacity Factor

Pollutant	PC Subcritical Without CCS
CO_2	
• tons/year	3,864,884
• lb/MMBtu	203
• cost of CO_2 avoided ($/ton)	N/A
SO_2	
• tons/year	1,613
• lb/MMBtu	0.085
NOx	
• tons/year	1,331
• lb/MMBtu	0.070
PM	
• tons/year	247
• lb/MMBtu	0.013
Hg	
• tons/year	0.022
• lb/TBtu	1.14

Cost Estimation

Plant size, primary/secondary fuel type, construction time, total plant cost (TPC) basis year, plant CF, plant heat rate, fuel cost, plant book life, and plant in-service date are used to develop capital cost, production cost, and levelized cost-of-electricity (LCOE) estimates. Costs for the plant are based on adjusted vendor-furnished and actual cost data from recent design/build projects. Values for financial assumptions and a cost summary are shown in Table 3.

Project contingencies were added to each case to cover project uncertainty and the cost of any additional equipment that could result from detailed design. The project contingencies represent costs that are expected to occur. Project contingency was 11.2 percent of the subcritical PC case without CCS TPC.

No process contingency is included in this case because all elements of the technology are commercially proven.

This study assumes that each new plant would be dispatched any time it is available and would be capable of generating maximum capacity when online. Therefore, CF is assumed to equal availability and is 85 percent for PC cases.

The 550 MWe (net) subcritical PC plant is projected to have a TPC of $1,549/kWe, resulting in a 20-year LCOE of 64.0 mills/kWh.

Table 3. Major Financial Assumptions and Resulting Cost Summary[1]

Major Assumptions					
Case:	**1x550 MWe net Subcritical PC**				
Plant Size:	550.4	(MWe, net)	Heat Rate:	9,276	(Btu/kWh)
Primary/Secondary Fuel (type):	Illinois #6 Coal		Fuel Cost:	1.80	($/MMBtu)
Construction Duration:	3	(years)	Plant Life:	30	(years)
Total Plant Cost[2] Year:	2007	(January)	Plant in Service:	2010	(January)
Capacity Factor:	85	(%)	Capital Charge Factor:	16.4	(%)
Resulting Capital Investment (Levelized 2007 dollars)					**Mills/kWh**
Total Plant Cost					34.1
Resulting Operating Costs (Levelized 2007 dollars)[3]					**Mills/kWh**
Fixed Operating Cost					3.8
Variable Operating Cost					5.8
Resulting Fuel Cost (Levelized 2007 dollars) @ $1.80 / MMBtu					**Mills/kWh**
					20.2
Total Levelized Busbar Cost of Power (2007 dollars)					**Mills/kWh**
					64.0

[1]Costs shown can vary ± 30%.

[2]Total plant cost includes all equipment (complete with initial chemical and catalyst loadings), materials, labor (direct and indirect), engineering and construction management, and contingencies (process and project). Owner's costs are not included.

[3]No credit taken for by-product sales.

Contacts

Julianne M. Klara
Senior Analyst
National Energy Technology Laboratory
626 Cochrans Mill Road
P.O. Box 10940
Pittsburgh, PA 15236
412-386-6089
julianne.klara@netl.doe.gov

John G. Wimer
Systems Analysis Team Lead
National Energy Technology Laboratory
3610 Collins Ferry Road
P. O. Box 880
Morgantown, WV 26507
304-285-4124
john.wimer@netl.doe.gov

Reference: Cost and Performance Baseline for Fossil Energy Plants, Vol. 1, DOE/NETL-2007/1281, May 2007.

B_PC_SUB_051507

Subcritical Pulverized Bituminous Coal Plant With Carbon Capture & Sequestration

Plant Overview

This analysis is based on a 550 MWe (net power output) subcritical bituminous pulverized coal (PC) plant located at a greenfield site in the midwestern United States. This plant captures carbon dioxide (CO_2) to be sequestered and is designed to meet Best Available Control Technology (BACT) emission limits. The plant is a single-train design. The combination process, heat, and mass balance diagram for the subcritical PC plant with carbon capture and sequestration (CCS) case is shown in Figure 1. The primary fuel is an Illinois No. 6 bituminous coal with a higher heating value (HHV) of 11,666 Btu/lb. The capacity factor (CF) for the plant is 85 percent without sparing of major train components. A summary of plant performance data for the subcritical PC plant with CCS is presented in Table 1.

Table 1. Plant Performance Summary

Plant Type	PC Subcritical
Carbon capture	Yes
Net power output (kWe)	549,613
Net plant HHV efficiency (%)	24.9
Primary fuel (type)	Illinois No. 6 coal
Levelized cost-of-electricity (mills/kWh) @ 85% capacity factor	118.8
Total plant cost ($ x 1,000)	$1,591,277
Cost of CO_2 avoided[1] ($/ton)	68

[1]The cost of CO_2 avoided is defined as the difference in the 20-year levelized-cost-of electricity between controlled and uncontrolled like cases, divided by the difference in CO_2 emissions in kg/MWh.

Figure 1. Process Flow Diagram
Subcritical Pulverized Coal Unit With CCS

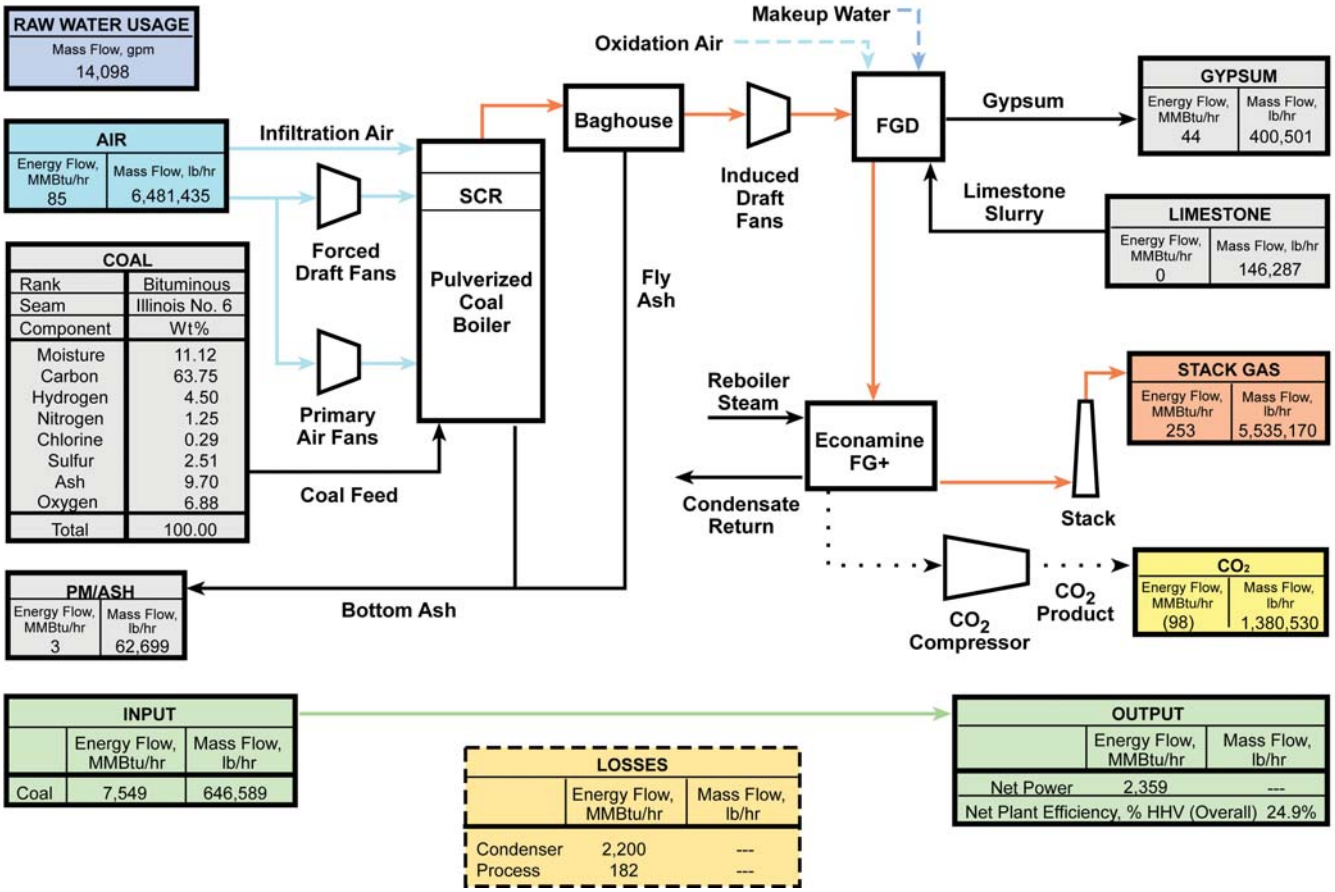

Note: Diagram is provided for general reference of major flows only. For complete flow information, please refer to the final report.

Technical Description

The analysis for the subcritical PC plant with CCS is based on a commercially available dry-bottom, wall-fired boiler equipped with low-nitrogen oxides (NOx) burners (LNBs) and over-fire air (OFA). The unit is a balanced-draft, natural-circulation design equipped with a superheater, reheater, economizer, and air preheater. Hot flue gas (FG) exiting the boiler is treated by a selective catalytic reduction (SCR) unit for NOx removal, a baghouse for particulate matter (PM) removal, and a limestone-based scrubber for sulfur dioxide (SO_2) control and co-removal of mercury (Hg). This plant utilizes a conventional steam turbine for power generation. The Rankine cycle is based on a single reheat system with steam conditions of 16.5 MPa/566°C/566°C (2,400 psig/1,050°F/1,050°F).

This subcritical PC plant with CCS is equipped with the Fluor Econamine FG Plus™ technology for carbon capture. Flue gas exiting the scrubber system is directed to the Econamine FG Plus™ process, where CO_2 is absorbed in a monethanolamine-based solvent. A booster blower is required to overcome the process pressure drop. Carbon dioxide recovered in the Econamine FG Plus™ process is dried, compressed, and delivered to the plant fence line at 15.3 MPa (2,215 psia) for subsequent pipeline transport. The compressed CO_2 is transported via pipeline to a geologic sequestration field for injection into a saline aquifer, which is located within 50 miles of the plant.

Achieving a nominal 550 MWe net output with this plant configuration results in an HHV thermal input requirement of 2,210,668 kWt (7,543 MMBtu/hr basis). This thermal input is achieved by burning coal at a rate of 646,589 lb/hr, which yields an HHV net plant heat rate of 13,724 Btu/kWh (net plant efficiency of 24.9 percent). The gross power output of 680 MWe is produced from the steam turbine generator. With an auxiliary power requirement of 130 MWe, the net plant output is 550 MWe. The Econamine FG Plus™ process imposes a significant auxiliary power load on the system, which requires this case to have a higher gross output, as compared with the subcritical without CCS case, to maintain the same 550 MWe net output.

Environmental Performance

This study assumes the use of BACT to meet the emission requirements of the 2006 New Source Performance Standard for criteria pollutants.

The subcritical PC plant with CCS has an emission control strategy consisting of LNBs with OFA and SCR for NOx control, a pulse jet fabric filter for PM control, and a wet-limestone, forced-oxidation scrubber for SO_2 control. After NOx emissions are initially controlled through the use of LNBs and OFA, an SCR unit is used to further reduce the NOx concentration by 86 percent. Particulate emissions are controlled using a pulse jet fabric filter, which operates at an efficiency of 99.8 percent. The wet-limestone, forced-oxidation scrubber achieves a 98 percent removal of SO_2. A polishing scrubber included as part of the Econamine FG Plus™ process further reduces the SO_2 concentration to less than 10 ppmv. The balance of the SO_2 is removed in the Econamine absorber resulting in negligible SO_2 emissions. The byproduct from the wet-limestone scrubber calcium sulfate, is dewatered and stored onsite. The wallboard-grade material potentially can be marketed and sold, but since it is highly dependent on local market conditions, no byproduct credit is taken. The combination of SCR, a fabric filter and wet scrubber also

Table 2. Air Emissions Summary @ 85% Capacity Factor

Pollutant	PC Subcritical With CCS (90%)
CO_2	
• tons/year	569,524
• lb/MMBtu	20.3
• cost of CO_2 avoided ($/ton)	68
SO_2	
• tons/year	Negligible
• lb/MMBtu	Negligible
NOx	
• tons/year	1,966
• lb/MMBtu	0.070
PM	
• tons/year	365
• lb/MMBtu	0.013
Hg	
• tons/year	0.032
• lb/TBtu	1.14

provides co-benefit Hg capture at an assumed 90 percent of the inlet value. After leaving the Econamine FG Plus™ process, the flue gas is vented through the plant stack.

A summary of the resulting air emissions is presented in Table 2.

Cost Estimation

Plant size, primary/secondary fuel type, construction time, total plant cost (TPC) basis year, plant CF, plant heat rate, fuel cost, plant book life, and plant in-service date were used as inputs to develop capital cost, production cost, and levelized cost-of-electricity (LCOE) estimates. Costs for the plant were based on adjusted vendor-furnished and actual cost data from recent design/build projects. Values for financial assumptions and a cost summary are shown in Table 3.

Project contingencies were added to each case to cover project uncertainty and the cost of any additional equipment that could result from detailed design. The project contingencies represent costs that are expected to occur. Project contingency was 12.5 percent of the subcritical PC CCS case TPC.

Process contingency is intended to compensate for uncertainties arising as a result of the state of technology development. Process contingencies represent 3.6 percent of the subcritical PC CCS case TPC and have been applied to the estimates as follows:

- CO_2 Removal System – 20 percent on all PC CCS cases.
- Instrumentation and Controls – 5 percent on the PC CCS cases.

This study assumes that each new plant would be dispatched any time it is available and would be capable of generating maximum capacity when online. Therefore, CF is assumed to equal availability and is 85 percent for PC cases.

For the PC cases that feature CCS, capital and operating costs were estimated for transporting CO_2 to an underground storage area, associated storage maintenance, and for monitoring beyond the expected life of the plant. These costs were then levelized over a 20-year period.

The calculated cost of transport, storage, and monitoring for CO_2 is $3.40/short ton, which adds 4.3 mills/kWh to the LCOE.

The 550 (net) MWe subcritical PC plant with CCS was projected to have a TPC of $2,888/kWe, resulting in a 20-year levelized COE of 118.8 mills/kWh.

Table 3. Major Financial Assumptions and Resulting Cost Summary[1]

Major Assumptions					
Case:	**1x550 MWe net Subcritical PC with CCS**				
Plant Size:	549.6	(MWe, net)	Heat Rate:	13,724	(Btu/kWh)
Primary/Secondary Fuel (type):	Illinois #6 Coal		Fuel Cost:	1.80	($/MMBtu)
Construction Duration:	3	(years)	Plant Life:	30	(years)
Total Plant Cost[2] Year:	2007	(January)	Plant in Service:	2010	(January)
Capacity Factor:	85	(%)	Capital Charge Factor:	17.5	(%)

	Mills/kWh
Resulting Capital Investment (Levelized 2007 dollars)	
Total Plant Cost	68.0
Resulting Operating Costs (Levelized 2007 dollars)[3]	
Fixed Operating Cost	5.8
Variable Operating Cost	10.8
Resulting Fuel Cost (Levelized 2007 dollars) @ $1.80 / MMBtu	
	29.8
Resulting Levelized CO_2 Cost (2007 dollars)	
	4.3
Total Levelized Busbar Cost of Power (2007 dollars)	
	118.8

[1]Costs shown can vary ± 30%.

[2]Total plant cost includes all equipment (complete with initial chemical and catalyst loadings), materials, labor (direct and indirect), engineering and construction management, and contingencies (process and project). Owner's costs are not included.

[3]No credit taken for by-product sales.

Contacts

Julianne M. Klara
Senior Analyst
National Energy Technology Laboratory
626 Cochrans Mill Road
P.O. Box 10940
Pittsburgh, PA 15236
412-386-6089
julianne.klara@netl.doe.gov

John G. Wimer
Systems Analysis Team Lead
National Energy Technology Laboratory
3610 Collins Ferry Road
P. O. Box 880
Morgantown, WV 26507
304-285-4124
john.wimer@netl.doe.gov

Reference: Cost and Performance Baseline for Fossil Energy Plants, Vol. 1, DOE/NETL-2007/1281, May 2007.
B_PC_SUB_CCS_051507

Supercritical Pulverized Bituminous Coal Plant

Plant Overview

This analysis is based on a 550 MWe (net power output) supercritical bituminous pulverized coal (PC) plant located at a greenfield site in the midwestern United States. This plant is designed to meet Best Available Control Technology (BACT) emission limits. The plant is a single-train design. The combination process, heat and mass balance diagram for the supercritical PC plant case is shown in Figure 1. The primary fuel is an Illinois No. 6 bituminous coal with a higher heating value (HHV) of 11,666 Btu/lb. The capacity factor (CF) for the plant is 85 percent without sparing of major train components. A summary of plant performance data for the supercritical PC plant is presented in Table 1.

Table 1. Plant Performance Summary

Plant Type	PC Supercritical
Carbon capture	No
Net power output (kWe)	550,150
Net plant HHV efficiency (%)	39.1
Primary fuel (type)	Illinois No. 6 coal
Levelized cost-of-electricity (mills/kWh) @ 85% capacity factor	63.3
Total plant cost ($ x 1,000)	$866,391

Figure 1. Process Flow Diagram
Supercritical Pulverized Coal Unit

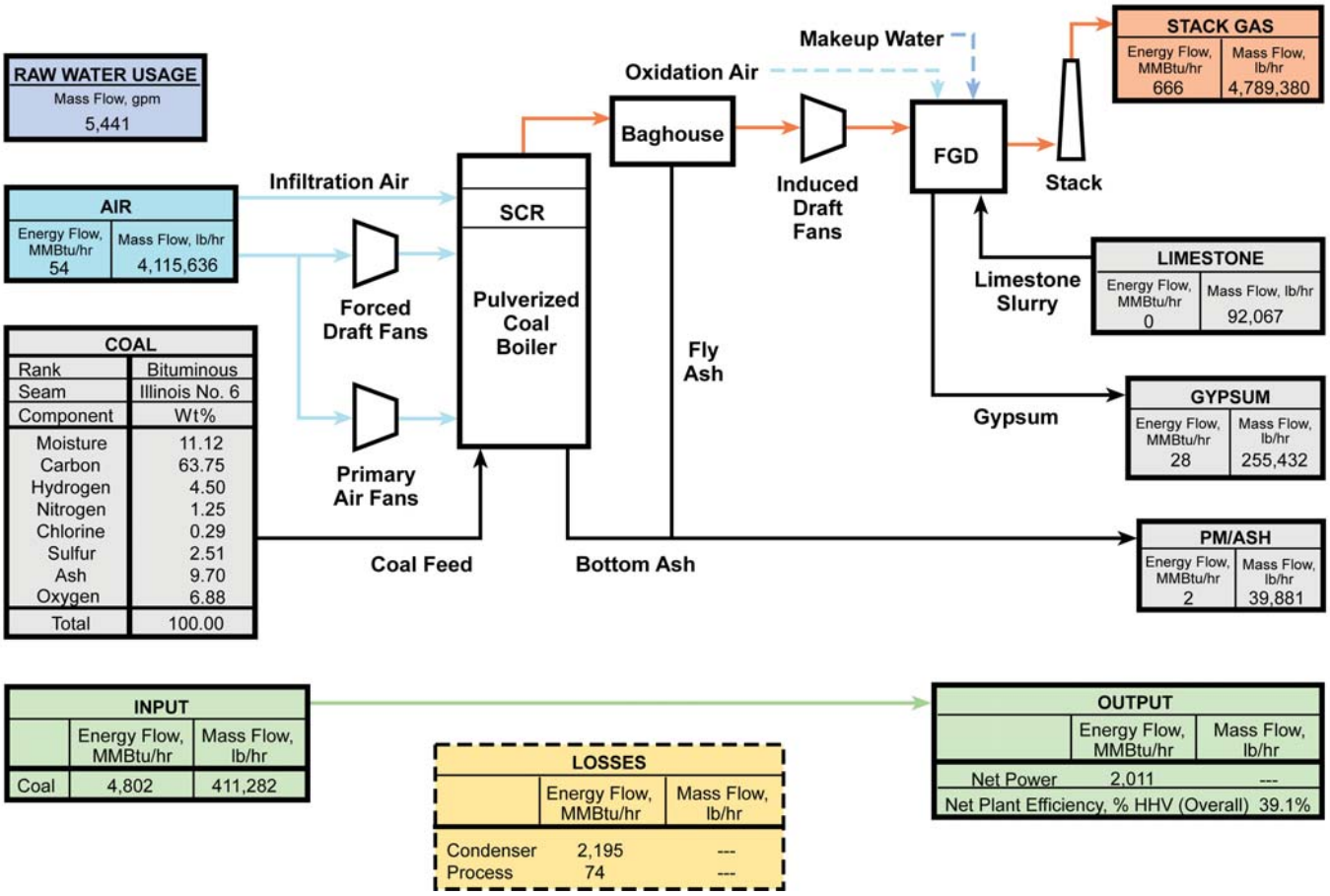

Note: Diagram is provided for general reference of major flows only. For complete flow information, please refer to the final report.

Technical Description

The analysis for the supercritical PC plant is based on a commercially available supercritical dry-bottom, wall-fired boiler equipped with low-nitrogen oxides burners (LNBs) with over-fire air (OFA) and selective catalytic reduction (SCR). The unit is a balanced-draft, natural-circulation design equipped with a superheater, reheater, economizer, and air preheater. Hot flue gas exiting the boiler is treated by an SCR unit for nitrogen oxides (NOx) removal, a baghouse for particulate matter (PM) removal, and a wet limestone forced oxidation scrubber for sulfur dioxide (SO_2) control and co-removal of mercury (Hg). This plant utilizes a conventional steam turbine for power generation. The Rankine cycle is based on a single reheat system with steam conditions of 24.1 MPa/ 593°C/593°C (3,500 psig/1,100°F/1,100°F).

Achieving a nominal 550 MWe net output with this plant configuration results in a HHV thermal input requirement of 1,406,161 KWt (4,799 MMBtu/hr basis). This thermal input is achieved by burning coal at a rate of 411,282 lb/hr, which yields an HHV net plant heat rate of 8,721 Btu/kWh (net plant HHV efficiency of 39.1 percent). The gross power output of 580 MWe is produced from the steam turbine generator. With an auxiliary power requirement of 30 MWe, the net plant output is 550 MWe.

Environmental Performance

This study assumes the use of BACT to meet the emission requirements of the 2006 New Source Performance Standards.

The supercritical PC plant has an emission control strategy consisting of LNBs with OFA and SCR for NOx control, a pulse jet fabric filter for PM control, and a wet-limestone, forced-oxidation scrubber for SO_2 control. After NOx emissions are initially controlled through the use of LNBs and OFA, an SCR unit is used to further reduce the NOx concentration by 86 percent. Particulate emissions are controlled using a pulse jet fabric filter, which operates at an efficiency of 99.8 percent. The wet-limestone, forced-oxidation scrubber for SO_2 control achieves 98 percent removal efficiency. The byproduct, calcium sulfate, is dewatered and stored onsite. The wallboard-grade material can potentially be marketed and sold but, since it is highly dependent on local market conditions, no byproduct credit is taken. The combination of SCR, a fabric filter and wet scrubber also provides co-benefit Hg capture at an assumed 90 percent of the inlet value.

A summary of the resulting air emissions is presented in Table 2.

Table 2. Air Emissions Summary @ 85% Capacity Factor

Pollutant	PC Supercritical Without CCS
CO_2	
• tons/year	3,632,123
• lb/MMBtu	203
• cost of CO_2 avoided ($/ton)	N/A
SO_2	
• tons/year	1,514
• lb/MMBtu	0.085
NOx	
• tons/year	1,250
• lb/MMBtu	0.070
PM (filterable)	
• tons/year	232
• lb/MMBtu	0.013
Hg	
• tons/year	0.020
• lb/TBtu	1.14

Cost Estimation

Plant size, primary/secondary fuel type, construction time, total plant cost (TPC) basis year, plant CF, plant heat rate, fuel cost, plant book life, and plant in-service date are used to develop capital cost, production cost, and levelized cost-of-electricity (LCOE) estimates. Costs for the plant are based on adjusted vendor-furnished and actual cost data from recent design/build projects. Values for financial assumptions and a cost summary are shown in Table 3.

Project contingencies were added to each case to cover project uncertainty and the cost of any additional equipment that could result from detailed design. The project contingencies represent costs that are expected to occur. Project contingency was 10.7 percent for the supercritical PC case TPC. No process contingency is included in this case because all elements of the technology are commercially proven.

This study assumes that each new plant would be dispatched any time it is available and would be capable of generating maximum capacity when online. Therefore, CF is assumed to equal availability and is 85 percent for PC cases.

The 550 MWe supercritical PC plant is projected to have a TPC of $1,574/kWe, resulting in a 20-year LCOE of 63.3 mills/kWh.

Table 3. Major Financial Assumptions and Resulting Cost Summary[1]

Major Assumptions					
Case:	**1x550 MWe net Supercritical PC**				
Plant Size:	550.2	(MWe, net)	Heat Rate:	8,721	(Btu/kWh)
Primary/Secondary Fuel (type):	Illinois #6 Coal		Fuel Cost:	1.80	($/MMBtu)
Construction Duration:	3	(years)	Plant Life:	30	(years)
Total Plant Cost[2] Year:	2007	(January)	Plant in Service:	2010	(January)
Capacity Factor:	85	(%)	Capital Charge Factor:	16.4	(%)
Resulting Capital Investment (Levelized 2007 dollars)					**Mills/kWh**
Total Plant Cost					34.7
Resulting Operating Costs (Levelized 2007 dollars)[3]					**Mills/kWh**
Fixed Operating Cost					3.9
Variable Operating Cost					5.7
Resulting Fuel Cost (Levelized 2007 dollars) @ $1.80 / MMBtu					**Mills/kWh**
					19.0
Total Levelized Busbar Cost of Power (2007 dollars)					**Mills/kWh**
					63.3

[1]Costs shown can vary ± 30%.

[2]Total plant cost includes all equipment (complete with initial chemical and catalyst loadings), materials, labor (direct and indirect), engineering and construction management, and contingencies (process and project). Owner's costs are not included.

[3]No credit taken for by-product sales.

Contacts

Julianne M. Klara
Senior Analyst
National Energy Technology Laboratory
626 Cochrans Mill Road
P.O. Box 10940
Pittsburgh, PA 15236
412-386-6089
julianne.klara@netl.doe.gov

John G. Wimer
Systems Analysis Team Lead
National Energy Technology Laboratory
3610 Collins Ferry Road
P. O. Box 880
Morgantown, WV 26507
304-285-4124
john.wimer@netl.doe.gov

Reference: Cost and Performance Baseline for Fossil Energy Plants, Vol. 1, DOE/NETL-2007/1281, May 2007.

B_PC_SUP_051507

Supercritical Pulverized Bituminous Coal Plant With Carbon Capture & Sequestration

Plant Overview

This analysis is based on a 550 MWe (net power output) supercritical bituminous pulverized coal (PC) plant located at a greenfield site in the midwestern United States. This plant captures carbon dioxide (CO_2) to be sequestered and is designed to meet Best Available Control Technology (BACT) emission limits. The plant is a single-train design. The combination process, heat, and mass balance diagram for the supercritical PC plant with carbon capture and sequestration (CCS) is shown in Figure 1. The primary fuel is an Illinois No. 6 bituminous coal with a higher heating value (HHV) of 11,666 Btu/lb. The capacity factor (CF) for the plant is 85 percent without sparing of major train components. A summary of plant performance data for the supercritical PC plant with CCS is presented in Table 1.

Table 1. Plant Performance Summary

Plant Type	PC Supercritical
Carbon capture	Yes
Net power output (kWe)	545,995
Net plant HHV efficiency (%)	27.2
Primary fuel (type)	Illinois No. 6 coal
Levelized cost-of-electricity (mills/kWh) @ 85% capacity factor	114.8
Total plant cost ($ x 1,000)	$1,567,073
Cost of CO_2 avoided[1] ($/ton)	68

[1]The cost of CO_2 avoided is defined as the difference in the 20-year levelized cost-of-electricity between controlled and uncontrolled like cases, divided by the difference in CO_2 emissions in kg/MWh.

Figure 1. Process Flow Diagram
Supercritical Pulverized Coal Unit With CCS

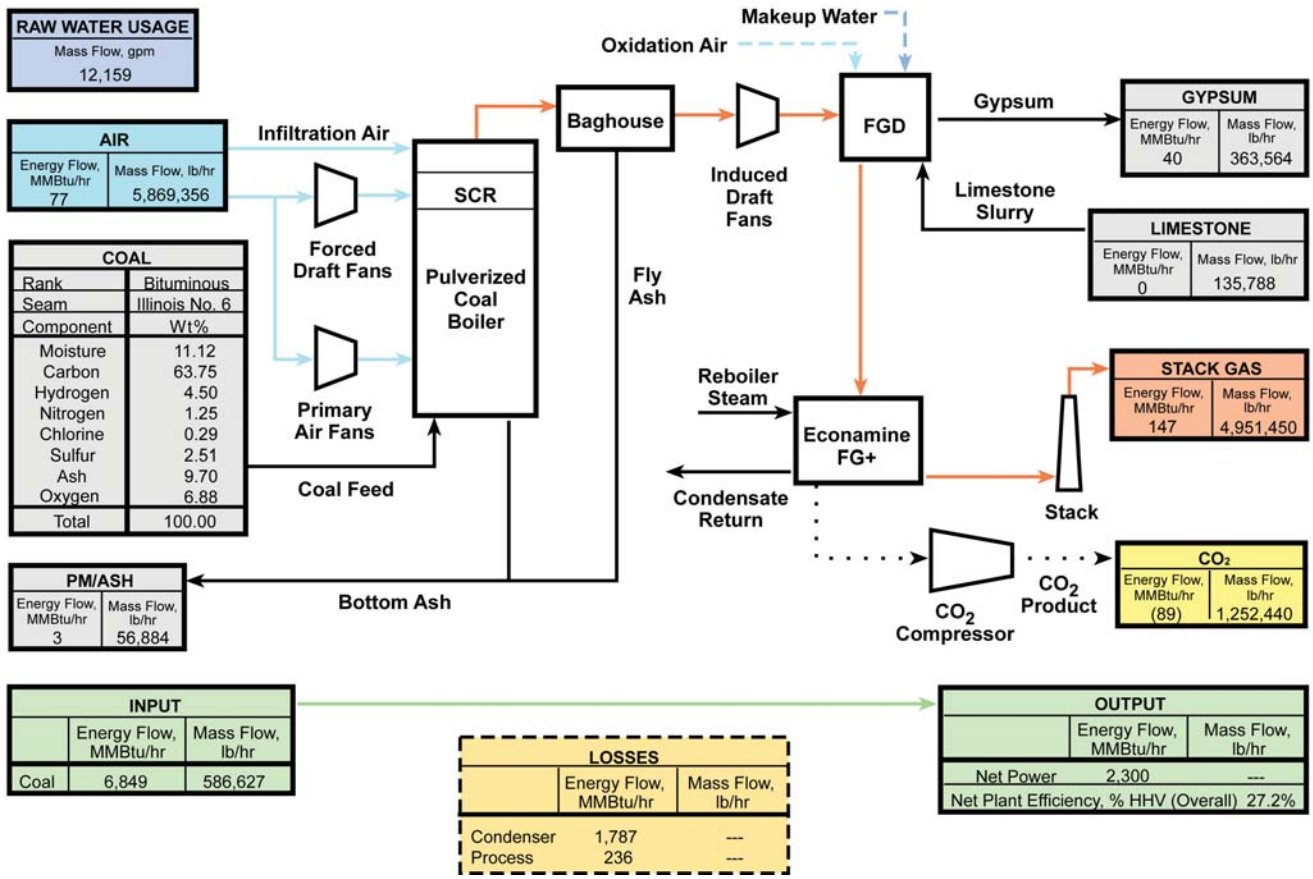

Note: Diagram is provided for general reference of major flows only. For complete flow information, please refer to the final report.

Technical Description

The analysis for the supercritical PC plant with CCS is based on a commercially available supercritical dry-bottom, wall-fired boiler equipped with low-nitrogen oxides (NOx) burners (LNBs), over-fire air (OFA), and selective catalytic reduction (SCR). The unit is a balanced-draft, natural-circulation design equipped with a superheater, reheater, economizer, and air preheater. Hot flue gas (FG) exiting the boiler is treated by an SCR unit for NOx removal, a baghouse for particulate matter (PM) removal, and a wet-limestone, forced-oxidation scrubber for sulfur dioxide (SO_2) control and co-removal of mercury (Hg). This plant utilizes a conventional steam turbine for power generation. The single reheat system uses a Rankine cycle with steam conditions of 24.1 MPa/593°C/593°C (3,500 psig/1,100°F/1,100°F).

This supercritical PC plant with CCS is equipped with the Fluor Econamine FG Plus™ technology for carbon capture. Flue gas exiting the scrubber system is directed to the Econamine FG Plus™ process, where CO_2 is absorbed in a monethanolamine-based solvent. A booster blower is required to overcome the process pressure drop. Carbon dioxide recovered in the Econamine FG Plus™ process is dried, compressed, and delivered to the plant fence line at 15.3 MPa (2,215 psia) for subsequent pipeline transport and sequestration. The compressed CO_2 is transported via pipeline to a geologic sequestration field for injection into a saline aquifer, which is located within 50 miles of the plant.

Achieving a nominal 550 MWe net output with this plant configuration, results in an HHV thermal input requirement of 2,005,660 kWt (6,845 MMBtu/hr). This thermal input is achieved by burning coal at a rate of 586,627 lb/hr, which yields an HHV net plant heat rate of 12,534 Btu/kWh (net plant HHV efficiency of 27.2 percent). The gross power output produced from the steam turbine generator is 663 MWe. With an auxiliary power requirement of 117 MWe, the net plant output is 546 MWe. The Econamine FG Plus™ process imposes a significant auxiliary power load on the system, which requires this case to have a higher gross output, as compared to the supercritical case without CCS, to maintain approximately the same net output.

Environmental Performance

This study assumes the use of BACT to meet the emission requirements of the 2006 New Source Performance Standard for criteria pollutants.

The supercritical PC plant with CCS has an emission control strategy consisting of LNBs with OFA and SCR for NOx control, a pulse jet fabric filter for PM control, and a wet-limestone, forced-oxidation scrubber for SO_2 control. After NOx emissions are initially controlled through the use of LNBs and OFA, an SCR unit is used to further reduce the NOx concentration by 86 percent. Particulate emissions are controlled using a pulse jet fabric filter, which operates at an efficiency of 99.8 percent. The wet-limestone, forced-oxidation scrubber achieves a 98 percent removal of SO_2. A polishing scrubber included as part of the Econamine FG Plus™ process further reduces the SO_2 concentration to less than 10 ppmv. The balance of the SO_2 is removed in the Econamine absorber resulting in negligible SO_2 emissions. The byproduct from the wet-limestone scrubber calcium sulfate, is dewatered and stored onsite. The wallboard-grade material potentially can be marketed and sold, but since it is highly dependent on local market conditions, no byproduct credit is taken. The combination of SCR,

Table 2. Air Emissions Summary @ 85% Capacity Factor

Pollutant	PC Supercritical With CCS (90%)
CO_2	
• tons/year	516,310
• lb/MMBtu	20.3
• cost of CO_2 avoided ($/ton)	68
SO_2	
• tons/year	Negligible
• lb/MMBtu	Negligible
NOx	
• tons/year	1,784
• lb/MMBtu	0.070
PM	
• tons/year	331
• lb/MMBtu	0.013
Hg	
• tons/year	0.029
• lb/TBtu	1.14

a fabric filter and wet scrubber also provides co-benefit Hg capture at an assumed 90 percent of the inlet value. The saturated FG exiting the scrubber is directed to the Econamine FG Plus™ process for CO_2 recovery. A booster blower is required to overcome the process pressure drop. After leaving the Econamine FG Plus™ process, the flue gas is vented through the plant stack.

A summary of the resulting air emissions is presented in Table 2.

Cost Estimation

Plant size, primary/secondary fuel type, construction time, total plant cost (TPC) basis year, plant CF, plant heat rate, fuel cost, plant book life, and plant in-service date were used as inputs to develop capital cost, production cost, and levelized cost-of-electricity (LCOE) estimates. Costs for the plant were based on adjusted vendor-furnished and actual cost data from recent design/build projects. Values for financial assumptions and a cost summary are shown in Table 3.

Project contingencies were added to each case to cover project uncertainty and the cost of any additional equipment that could result from detailed design. The project contingencies represent costs that are expected to occur. Project contingency was 12.4 percent for the supercritical PC CCS case TPC.

Process contingency is intended to compensate for uncertainties arising as a result of the state of technology development. Process contingencies represent 3.5 percent of the supercritical PC CCS case TPC and have been applied to the estimates as follows:

- CO_2 Removal System – 20 percent on all PC CCS cases.
- Instrumentation and Controls – 5 percent on the PC CCS cases.

This study assumes that each new plant would be dispatched any time it is available and would be capable of generating maximum capacity when online. Therefore, CF is assumed to equal availability and is 85 percent for PC cases.

For the PC cases that feature CCS, capital and operating costs were estimated for transporting CO_2 to an underground storage area, associated storage maintenance, and for monitoring beyond the expected life of the plant. These costs were then levelized over a 20-year period.

The calculated cost of transport, storage, and monitoring for CO_2 is $3.40/short ton, which adds 3.9 mills/kWh to the LCOE.

The 550 (net) MWe supercritical PC plant with CCS was projected to have TPC of $2,868/kWe, resulting in a 20-year LCOE of 114.8 mills/kWh.

Table 3. Major Financial Assumptions and Resulting Cost Summary[1]

Major Assumptions					
Case:	**1x550 MWe net Supercritical PC with CCS**				
Plant Size:	545.9	(MWe, net)	Heat Rate:	12,534	(Btu/kWh)
Primary/Secondary Fuel (type):	Illinois #6 Coal		Fuel Cost:	1.80	($/MMBtu)
Construction Duration:	3	(years)	Plant Life:	30	(years)
Total Plant Cost[2] Year:	2007	(January)	Plant in Service:	2010	(January)
Capacity Factor:	85	(%)	Capital Charge Factor:	17.5	(%)

Resulting Capital Investment (Levelized 2007 dollars)	**Mills/kWh**
Total Plant Cost	67.5
Resulting Operating Costs (Levelized 2007 dollars)[3]	**Mills/kWh**
Fixed Operating Cost	5.8
Variable Operating Cost	10.4
Resulting Fuel Cost (Levelized 2007 dollars) @ $1.80 / MMBtu	**Mills/kWh**
	27.2
Resulting Levelized CO_2 Cost (2007 dollars)	**Mills/kWh**
	3.9
Total Levelized Busbar Cost of Power (2007 dollars)	**Mills/kWh**
	114.8

[1]Costs shown can vary ± 30%.

[2]Total plant cost includes all equipment (complete with initial chemical and catalyst loadings), materials, labor (direct and indirect), engineering and construction management, and contingencies (process and project). Owner's costs are not included.

[3]No credit taken for by-product sales.

Contacts

Julianne M. Klara
Senior Analyst
National Energy Technology Laboratory
626 Cochrans Mill Road
P.O. Box 10940
Pittsburgh, PA 15236
412-386-6089
julianne.klara@netl.doe.gov

John G. Wimer
Systems Analysis Team Lead
National Energy Technology Laboratory
3610 Collins Ferry Road
P. O. Box 880
Morgantown, WV 26507
304-285-4124
john.wimer@netl.doe.gov

Reference: Cost and Performance Baseline for Fossil Energy Plants, Vol. 1, DOE/NETL-2007/1281, May 2007.

B_PC_SUP_CCS_051507

Natural Gas Combined-Cycle Plants With and Without Carbon Capture & Sequestration

Technology Overview

Two Natural Gas Combined-Cycle (NGCC) power plant configurations were evaluated, and the results are presented in this summary sheet. Both cases were analyzed using a consistent set of assumptions and analytical tools. The two configurations evaluated are based on an NGCC plant with and without carbon capture and sequestration (CCS).

- NGCC plant utilizing Advanced F-Class combustion turbine generators (CTGs).
- NGCC plant utilizing Advanced F-Class CTGs with CCS.

Each NGCC plant design is based on a market-ready technology that is assumed to be commercially available in time to support a 2010 startup date. The NGCC plants are built at a greenfield site in the midwestern United States and are assumed to operate in baseload mode at 85 percent capacity factor (CF) without sparing of major train components. Nominal plant size (gross rating) is 570 MWe without CCS and 520 MWe with CCS. All designs consist of two advanced F-Class CTGs, two heat recovery steam generators (HRSGs), and one steam turbine generator in a multi-shaft 2x2x1 configuration.

The NGCC cases were evaluated with and without CCS on a common thermal input basis. The case that includes CCS is equipped with the Fluor Econamine (FG) Plus™ process. The NGCC with CCS case also has a smaller plant net output resulting from the additional CCS facility auxiliary loads and steam consumption. After compression to pipeline specification pressure, the carbon dioxide (CO_2) is assumed is to be transported to a nearby underground storage facility for sequestration.

The size of the NGCC designs was determined by the output of the commercially available combustion turbine. Therefore, evaluation of the NGCC designs on a common net output basis was not possible. For the cases with and without CCS, respective gross output was 520 and 570 MWe, and respective net output was 482 and 560 MWe. The natural gas (NG) flowrate was 165,182 lb/hr in both cases. See Figure 1 for a generic block flow diagram of an NGCC plant. The orange blocks in the figure represent the unit operations added to the configuration for CCS cases.

Figure 1. NGCC Plant

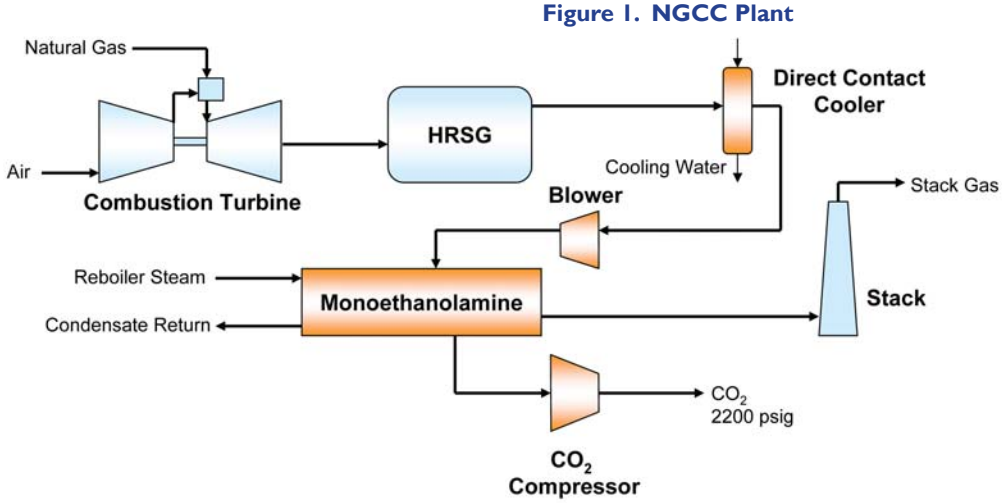

Nitrogen oxides control: dry low-NOx burner + selective catalytic reduction to maintain 2.5 ppmvd @ 15% oxygen

Carbon dioxide control: Monoethanolamine system for 90% removal

Steam conditions: 2,400 psig/1,050°F/950°F

Orange blocks indicate unit operations added for CCS case.

Note: Diagram is provided for general reference of major flows only. For complete flow information, please refer to the final report.

Technical Description

The combined-cycle plant was based on two CTGs. The CTG is representative of the advanced F-Class CTGs with an International Standards Organization base rating of 184,400 kWe (when firing NG). This machine is an axial flow, single-shaft, constant-speed unit, with variable inlet guide vanes and Multi-Nozzle Quiet Combustor dry low-NOx (DLN) burner combustion system. Additionally, a selective catalytic reduction (SCR) system further reduces the nitrogen oxides (NOx) emissions. The Rankine cycle portion of both designs uses a single-reheat 16.5 MPa/566°C/510°C (2,400 psig/1,050°F/950°F) cycle. Recirculating evaporative cooling systems are used for cycle heat rejection. The efficiency of the case without CCS is almost 51 percent, with a gross rating of 570 MWe.

The CCS case requires a significant amount of auxiliary power and extraction steam for the process, which reduces the output of the steam turbine. This results in a lower net plant output for the CCS cases of about 482 MWe for an average net plant efficiency of almost 44 percent higher heating value (HHV).

The CCS case is equipped with the Fluor Econamine Flue Gas (FG) Plus™ technology, which removes 90 percent of the CO_2 in the FG exiting the HRSG unit. Once captured, the CO_2 is dried and compressed to 15.3 MPa (2,215 psia). The compressed CO_2 is transported via pipeline to a geologic sequestration field for injection into a saline formation, which is located within 50 miles of the plant. Therefore, CO_2 transport, storage, and monitoring costs are included in the analyses.

Table 1. Fuel Analysis

Natural Gas		
Component		**Volume Percentage**
Methane	CH_4	93.9
Ethane	C_2H_6	3.2
Propane	C_3H_8	0.7
n-Butane	C_4H_{10}	0.4
Carbon dioxide	CO_2	1.0
Nitrogen	N_2	0.8
Total		**100.0**
	LHV	**HHV**
kJ/kg	47,764	52,970
kJ/scm	35	39
Btu/lb	20,552	22,792
Btu/scf	939	1,040

Fuel Analysis and Costs

The design NG characteristics are presented in Table 1. Both NGCC cases were modeled with the design NG.

A NG cost of $6.40/MMkJ ($6.75/MMBtu) (January 2007 dollars) was determined from the Energy Information Administration AEO2007 for an eastern interior high-sulfur bituminous coal.

Environmental Design Basis

The environmental design for this study was based on evaluating both of the NGCC cases using the same regulatory design basis. The environmental specifications for a greenfield NGCC plant are based on the pipeline-quality NG specification in Table 1 and EPA 40 CFR Part 60, Subpart KKKK. Table 2 provides details of the environmental design basis for NGCC plants built at a midwestern U.S. location. The emissions controls assumed for each of the two NGCC cases are as follows:

Table 2. Environmental Targets

Pollutant	NGCC
SO_2	Negligible
NOx	2.5 ppmvd @ 15% Oxygen
PM (filterable)	Negligible
Hg	N/A

- Dry low-NOx burners in conjunction with SCR for NOx control in both cases.
- Econamine process for CO_2 capture in the CCS case.

NGCC plants produce negligible amounts of SO_2, particulate matter (PM), and mercury (Hg); therefore, no emissions controls equipment or features are required for these pollutants.

Major Economic and Financial Assumptions

For the NGCC cases, capital cost, production cost, and levelized cost-of-electricity (LCOE) estimates were developed for each plant based on adjusted vendor-furnished and actual cost data from recent design/build projects and resulted in determination of a revenue-requirement 20-year LCOE based on the power plant costs and assumed financing structure. Listed in Table 3 are the major economic and financial assumptions for the two NGCC cases.

Table 3. Major Economic and Financial Assumptions for NGCC Cases

Major Economic Assumptions	
Capacity factor	85%
Costs year in constant U.S. dollars	2007 (January)
Natural gas delivered cost	$6.75/MMBtu
Construction duration	3 Years
Plant startup date	2010 (January)
Major Financial Assumptions	
Depreciation	20 years
Federal income tax	34%
State income tax	6%
Low risk cases	
After-tax weighted cost of capital	8.79%
Capital structure:	
Common equity	50% (Cost = 12%)
Debt	50% (Cost = 9%)
Capital charge factor	16.4%
High risk cases	
After-tax weighted cost of capital	9.67%
Capital structure:	
Common equity	55% (Cost = 12%)
Debt	45% (Cost = 11%)
Capital charge factor	17.5%

Project contingencies were added to each of the cases to cover project uncertainty and the cost of any additional equipment that could result from detailed design. The project contingencies represent costs that are expected to occur. Project contingency was 10.6 percent for the NGCC case without CCS TPC and roughly 13.3 percent for the NGCC case with CCS.

Process contingency is intended to compensate for uncertainties arising as a result of the state of technology development. Process contingencies have been applied to the estimates as follows:

- CO_2 Removal System – 20 percent on all NGCC CCS cases.
- Instrumentation and Controls – 5 percent on the NGCC CCS cases.

This study assumes that each new plant would be dispatched any time it is available and would be capable of generating maximum capacity when online. Therefore, CF is assumed to equal availability and is 85 percent for NGCC cases.

For the NGCC case that features CCS, capital and operating costs were estimated for transporting CO_2 to an underground storage field, associated storage in a saline aquifer, and for monitoring beyond the expected life of the plant. These costs were then levelized over a 20-year period.

Results

The results of the analysis of the two NGCC cases are presented in the following subsections.

Capital Cost

The total plant cost (TPC) for each of the two NGCC cases is compared in Figure 2. The TPC includes all equipment (complete with initial chemical and catalyst loadings), materials, labor (direct and indirect), engineering and construction management, and contingencies (process and project). Owner's costs are not included.

The results of the analysis indicate that an NGCC costs $554/kWe, and that an additional $618/kWe is needed for the NGCC plant with CCS.

Figure 2. Comparison of TPC for the Two NGCC Cases

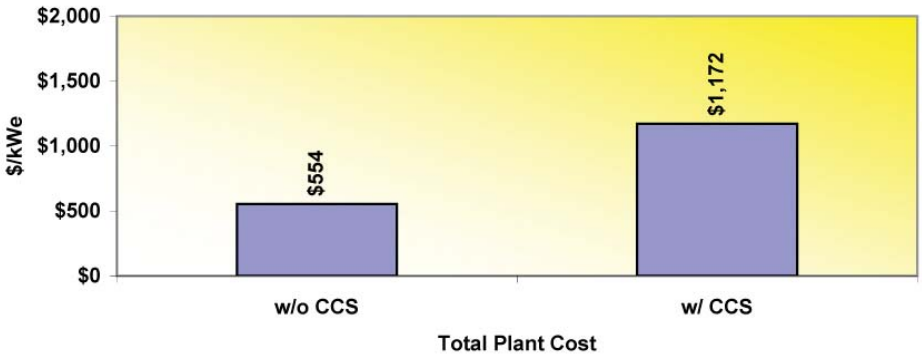

All costs are in January 2007 U.S. dollars.

Efficiency

The net plant HHV efficiencies for the two NGCC cases are compared in Figure 3. This analysis indicates that adding CCS to the NGCC reduces plant HHV efficiency by more than 7 percentage points, from 50.8 percent to 43.7 percent.

Figure 3. Comparison of Net Plant Efficiency for the Two NGCC Cases

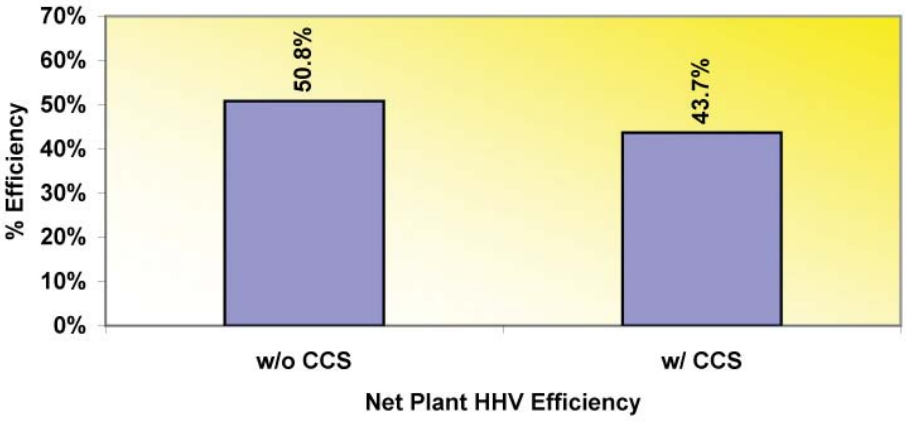

Levelized Cost-of-Electricity

The LCOE is a measurement of the coal-to-busbar cost of power, and includes the TPC, fixed and variable operating costs, and fuel costs levelized over a 20-year period. The calculated cost of transport, storage, and monitoring for CO_2 is about $7.00/short ton, which adds roughly 3 mills to the LCOE.

The NGCC without CCS plant generates power at an LCOE of 68.4 mills/kWh at a CF of 85 percent. When CCS is included, the increased TPC and reduced efficiency result in a higher LCOE of 97.4 mills/kWh.

Environmental Impacts

Listed in Table 4 is a comparative summary of emissions from the two NGCC cases. Mass emission rates and cumulative annual totals are given for sulfur dioxide (SO_2), NOx, PM, Hg, and CO_2.

Figure 4. Comparison of Levelized Cost-of-Electricity for the Two NGCC Cases

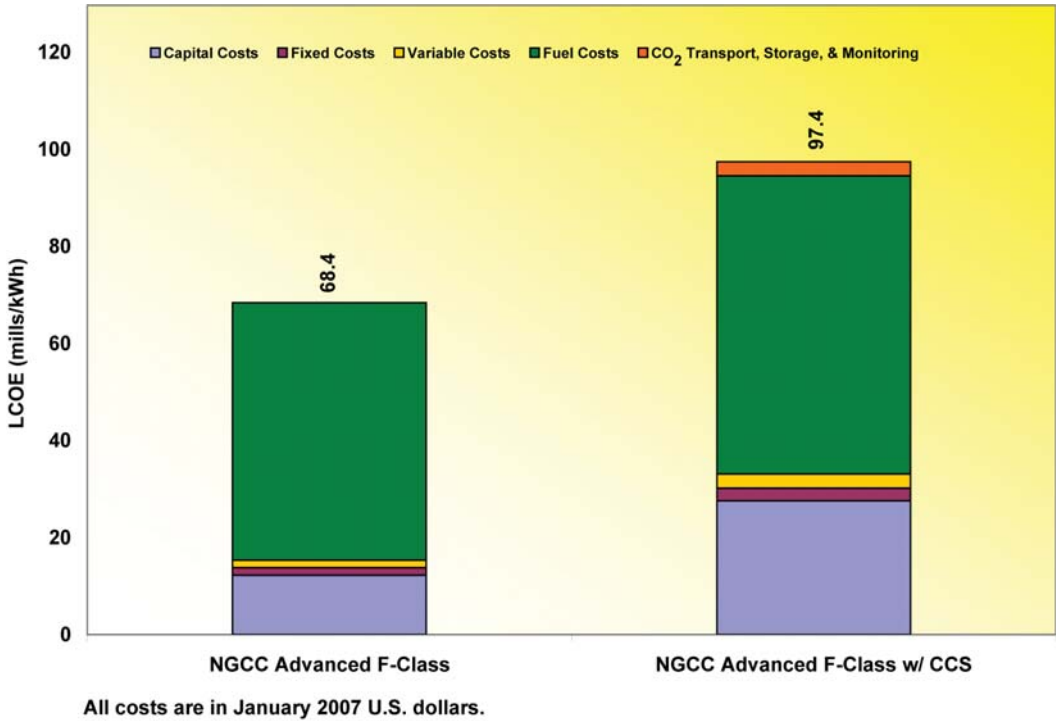

The emissions from both NGCC plants evaluated meet or exceed Best Available Control Technologies requirements for the design NG specification and EPA 40 CFR Part 60, Subpart KKKK. The CO_2 is reduced by 90 percent in the capture case, resulting in less than 167,000 tons/year of CO_2 emissions. The cost of CO_2 avoided is defined as the difference in the 20-year LCOE between controlled and uncontrolled like cases, divided by the difference in CO_2 emissions in kg/MWh. In this analysis, the cost of CO_2 avoided is about $83/ton. Sulfur dioxide, Hg, and PM emissions are negligible. Raw water usage in the CCS case is over 85 percent greater than for the case without CCS primarily because of the large Econamine process cooling water demand.

Table 4. Comparative Emissions for the Two NGCC Cases @ 85% Capacity Factor

Plant Type	NGCC	
	Without CCS	With CCS (90%)
CO_2		
• tons/year	1,661,720	166,172
• lb/MMBtu	119	11.9
• cost of avoided CO_2 ($/ton)	N/A	83
SO_2		
• tons/year	N/A	N/A
• lb/10^6 Btu	N/A	N/A
NOx		
• tons/year	127	127
• lb/MMBtu	0.009	0.009
PM (filterable)		
• tons/year	N/A	N/A
• lb/MMBtu	N/A	N/A
Hg		
• tons/year	N/A	N/A
• lb/TBtu	N/A	N/A
Raw water usage, gpm	2,511	4,681

Contacts

Julianne M. Klara
Senior Analyst
National Energy Technology Laboratory
626 Cochrans Mill Road
P.O. Box 10940
Pittsburgh, PA 15236
412-386-6089
julianne.klara@netl.doe.gov

John G. Wimer
Systems Analysis Team Lead
National Energy Technology Laboratory
3610 Collins Ferry Road
P. O. Box 880
Morgantown, WV 26507
304-285-4124
john.wimer@netl.doe.gov

Reference: Cost and Performance Baseline for Fossil Energy Plants, Vol. 1, DOE/NETL-2007/1281, May 2007.

B_NG_051507

Natural Gas Combined-Cycle Plant

Plant Overview

This analysis is based on a 560 MWe (net power output) natural gas combined-cycle (NGCC) plant located at a greenfield site in the midwestern United States. This plant is designed to meet Best Available Control Technology (BACT) emission limits. The combination process, heat, and mass balance diagram for the NGCC plant is shown in Figure 1. The primary fuel is natural gas (NG) with a higher heating value (HHV) of 22,792 Btu/lb. The plant is assumed to operate in baseload mode at a capacity factor (CF) of 85 percent without sparing of major train components. A summary of plant performance data for the NGCC plant is presented in Table 1.

Table 1. Plant Performance Summary

Plant Type	NGCC
Carbon capture	No
Net power output (kWe)	560,360
Net plant HHV efficiency (%)	50.8
Primary fuel (type)	Natural Gas
Levelized cost-of-electricity (mills/kWh) @ 85% capacity factor	68.4
Total plant cost ($ x 1,000)	$310,710

Figure 1. Process Flow Diagram NGCC

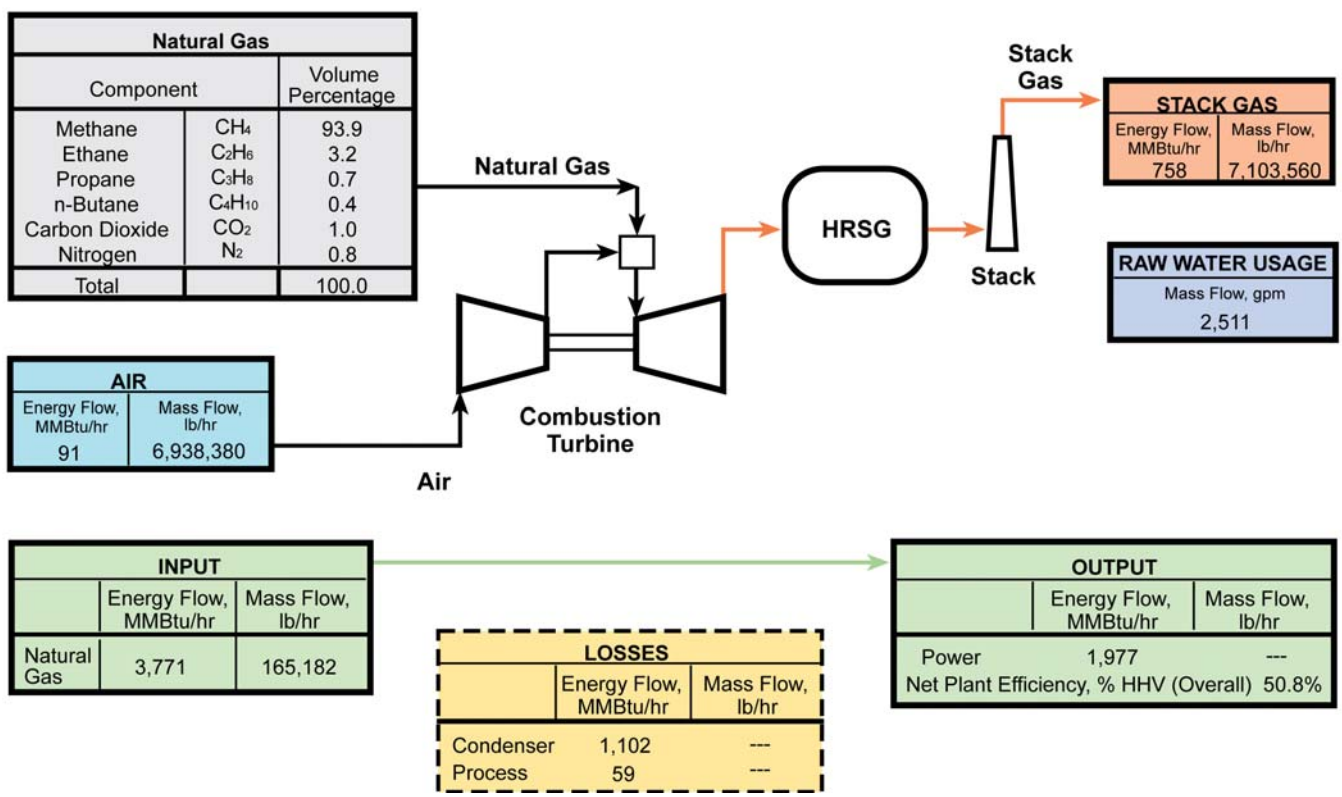

Note: Diagram is provided for general reference of major flows only. For complete flow information, please refer to the final report.

Technical Description

Table 2. Advanced Gas Turbine Performance[1]

	Advanced F-Class
Net output, MWe	185
Pressure ratio	18.5
Airflow, kg/s (lb/s)	431 (950)
Firing temperature, °C (°F)	>1,371 (>2,500)

[1]At International Standards Organization conditions firing natural gas.

The analysis for the NGCC plant is based on two advanced F-Class combustion turbine generators (CTGs), which are assumed to be commercially available to support startup in 2010; two heat recovery steam generators (HRSGs); and one steam turbine generator (STG) in a multi-shaft 2x2x1 configuration with a recirculating wet cooling tower for cycle heat rejection. A performance summary for the advanced F-Class CTGs is presented in Table 2. The unit consists of an NG system that feeds NG at the required pressure and temperature to the two axial flow, constant-speed CTGs with variable inlet guide vanes, and a dry low-NOx (DLN) burner combustion system. Each CTG exhausts to an HRSG configured with high-, intermediate-, and low-pressure steam systems, including drum, superheater, reheater, and economizer sections. Steam from both HRSGs flows to a conventional steam turbine for power generation. The Rankine cycle consists of a single reheat system with steam conditions of 16.5 MPa/566°C/510°C (2,400 psig/1,050°F/950°F). Nitrogen oxides (NOx) emissions are controlled to 25 ppmvd (referenced to 15 percent oxygen (O_2)) by the DLN combustion system and then further reduced by a selective catalytic reduction (SCR) system. The SCR system was designed for 90 percent reduction of NOx. These together achieve the emission limit of 2.5 ppmvd NOx (referenced to 15 percent O_2). All other support systems and equipment are typical for a conventional NGCC plant. Plant performance is based on the properties of pipeline-quality NG.

Table 3. Plant Electrical Generation

	Electrical Summary
Advanced gas turbine x 2, MWe	370.2
Steam turbine, MWe	200.0
Gross power output, MWe	570.2
Auxiliary power requirement, MWe	(9.8)
Net power output, MWe	560.4

Achieving a nominal 560 MWe net output with such a plant configuration results in an HHV thermal input requirement of 1,103,362 kWt (3,765 MMBtu/hr basis). This thermal input is achieved by burning NG at a rate of 165,182 lb/hr, which yields an HHV net plant heat rate of 6,719 Btu/kWh (HHV efficiency of 50.8 percent). The gross power output of 570 MWe is produced from the advanced CTGs and the STG. With an auxiliary power requirement of 10 MWe, the net plant output is 560 MWe. The summary of plant electrical generation performance is presented in Table 3.

Environmental Performance

This study assumes the use of BACT to meet the emission requirements of the 2006 New Source Performance Standards.

NGCC plants use NG as their fuel, which creates negligible emissions of sulfur dioxide (SO_2), particulate matter (PM), and mercury (Hg); therefore, NGCC plants require no emissions controls equipment or features to reduce these emissions. NOx emissions are controlled to 25 ppmvd (referenced to 15 percent O_2) by the DLN combustion system and then further reduced by an SCR system. The SCR system was designed for 90 percent reduction while firing NG. The DLN burner, together with the SCR, achieves the emission limit of 2.5 ppmvd (referenced to 15 percent O_2).

A summary of the resulting air emissions is presented in Table 4.

Cost Estimation

Plant size, primary/secondary fuel type, construction time, total plant cost (TPC) basis year, plant CF, plant heat rate, fuel cost, plant book life, and plant in-service date were used as inputs to develop capital cost, production cost, and levelized cost-of-electricity (LCOE) estimates. Costs for the plant were based on adjusted vendor-furnished and actual cost data from recent design/build projects. Values for financial assumptions and a cost summary are shown in Table 5.

Project contingencies were added to each case to cover project uncertainty and the cost of any additional equipment that could result from detailed design. The project contingencies represent costs that are expected to occur. Project contingency was 10.6 percent of the TPC.

No process contingency is included in this case because all elements of the technology are commercially proven.

This study assumes that each new plant would be dispatched any time it is available and would be capable of generating maximum capacity when online. Therefore, CF is assumed to equal availability and is 85 percent for NGCC cases.

Table 4. Air Emissions Summary @ 85% Capacity Factor

Pollutant	NGCC Without CCS
CO_2	
• tons/year	1,661,720
• lb/MMBtu	119
• cost of CO_2 avoided ($/ton)	N/A
SO_2	
• tons/year	Negligible
• lb/MMBtu	Negligible
NOx	
• tons/year	127
• lb/MMBtu	0.009
PM (filterable)	
• tons/year	Negligible
• lb/MMBtu	Negligible
Hg	
• tons/year	Negligible
• lb/TBtu	Negligible

The 560 (net) MWe NGCC plant was projected to have a TPC of $554/kWe, resulting in a 20-year LCOE of 68.4 mills/kWh.

Table 5. Major Financial Assumptions and Resulting Cost Summary[1]

Major Assumptions					
Case:	**1x560 MWe net NGCC**				
Plant Size:	560.4	(MWe, net)	Heat Rate:	6,719	(Btu/kWh)
Primary/Secondary Fuel (type):	Natural Gas		Fuel Cost:	6.75	($/MMBtu)
Construction Duration:	3	(years)	Plant Life:	30	(years)
Total Plant Cost[2] Year:	2007	(January)	Plant in Service:	2010	(January)
Capacity Factor:	85	(%)	Capital Charge Factor:	16.4	(%)
Resulting Capital Investment (Levelized 2007 dollars)					**Mills/kWh**
Total Plant Cost					12.2
Resulting Operating Costs (Levelized 2007 dollars)					**Mills/kWh**
Fixed Operating Cost					1.5
Variable Operating Cost					1.5
Resulting Fuel Cost (Levelized 2007 dollars) @ $1.80 / MMBtu					**Mills/kWh**
					53.1
Total Levelized Busbar Cost of Power (2007 dollars)					**Mills/kWh**
					68.4

[1]Costs shown can vary ± 30%.

[2]Total plant cost includes all equipment (complete with initial chemical and catalyst loadings), materials, labor (direct and indirect), engineering and construction management, and contingencies (process and project). Owner's costs are not included.

Contacts

Julianne M. Klara
Senior Analyst
National Energy Technology Laboratory
626 Cochrans Mill Road
P.O. Box 10940
Pittsburgh, PA 15236
412-386-6089
julianne.klara@netl.doe.gov

John G. Wimer
Systems Analysis Team Lead
National Energy Technology Laboratory
3610 Collins Ferry Road
P. O. Box 880
Morgantown, WV 26507
304-285-4124
john.wimer@netl.doe.gov

Reference: Cost and Performance Baseline for Fossil Energy Plants, Vol. 1, DOE/NETL-2007/1281, May 2007.

B_NGCC_FClass_051607

Natural Gas Combined-Cycle Plant With Carbon Capture & Sequestration

Plant Overview

This analysis is based on a 482 MWe (net power output) natural gas combined-cycle (NGCC) plant located at a greenfield site in the midwestern United States. This plant captures carbon dioxide (CO_2) to be sequestered and is designed to meet Best Available Control Technology (BACT) emission limits. The combination process, heat, and mass balance diagram for the NGCC plant with carbon capture and sequestration (CCS) is shown in Figure 1. The primary fuel is natural gas (NG) with a higher heating value (HHV) of 22,792 Btu/lb. The plant is assumed to operate in baseload mode at a capacity factor (CF) of 85 percent without sparing for major train components. A summary of plant performance data for the NGCC plant with CCS case is presented in Table 1.

Table 1. Plant Performance Summary

Plant Type	NGCC
Carbon capture	Yes
Net power output (kWe)	481,890
Net plant HHV efficiency (%)	43.7
Primary fuel (type)	Natural gas
Levelized cost-of-electricity (mills/kWh) @ 85% capacity factor	97.4
Total plant cost ($ x 1,000)	$564,628
Cost of CO_2 avoided[1] ($/ton)	83

[1]The cost of CO_2 avoided is defined as the difference in the 20-year levelized cost-of-electricity between controlled and uncontrolled like cases, divided by the difference in CO_2 emissions in kg/MWh.

Figure 1. Process Flow Diagram NGCC With CCS

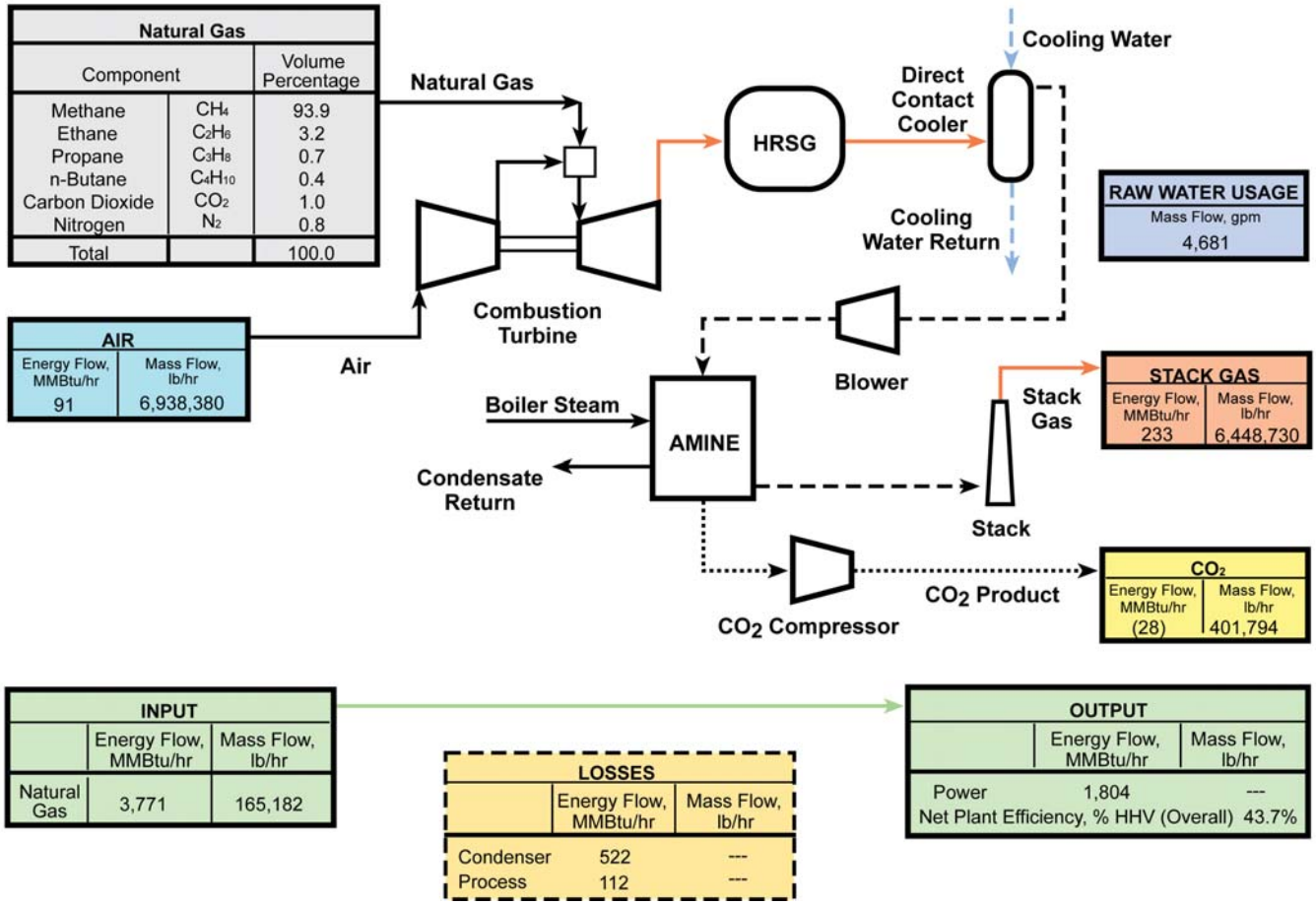

Note: Diagram is provided for general reference of major flows only. For complete flow information, please refer to the final report.

Technical Description

The analysis for the NGCC plant with CCS is based on two advanced F-Class combustion turbine generators (CTGs) that are assumed to be commercially available to support startup in 2010, two heat recovery steam generators (HRSGs), and one steam turbine generator (STG) in a multi-shaft 2x2x1 configuration with a recirculating wet cooling tower for cycle heat rejection. A performance summary for the advanced CTG for the NGCC plant with CCS is presented in Table 2. The unit consists of an NG system that feeds NG at the required pressure and temperature to the two axial-flow, constant-speed CTGs with variable inlet guide vanes and a dry low-NOx (DLN) burner combustion system. Each CTG exhausts to an HRSG configured with high-, intermediate-, and low-pressure steam systems, including drum, superheater, reheater, and economizer sections. Steam flows from both HRSGs to a conventional STG for power generation. The Rankine cycle consists of a single reheat system with steam conditions of 16.5 MPa/566°C/510°C (2,400 psig/1,050°F/950°F). Nitrogen oxides emissions are controlled to 25 ppmvd (referenced to 15 percent oxygen (O_2) by the DLN combustion system and then further reduced by a selective catalytic reduction (SCR) system. The SCR system was designed for 90 percent nitrogen oxides (NOx) reduction. The DLN burner, together with the SCR system, achieves the emission limit of 2.5 ppmvd (referenced to 15 percent O_2). All other support systems and equipment are typical for a conventional NGCC plant. Plant performance is based on the properties of pipeline-quality NG.

Table 2. Advanced Gas Turbine Performance[1]

	Advanced F-Class
Net output, MWe	185
Pressure ratio	18.5
Airflow, kg/s (lb/s)	431 (950)
Firing temperature, °C (°F)	>1,371 (>2,500)

[1]At International Standards Organization conditions firing natural gas.

Flue gas (FG) exiting the HRSGs is directed to the Fluor Econamine FG Plus™ process, where CO_2 is absorbed in a monoethanolamine-based solvent. A booster blower is required to overcome the process pressure drop. Carbon dioxide removed in the Econamine FG Plus™ process is dried and compressed for subsequent pipeline transport and sequestration. The CO_2 is delivered to the plant fence line at 15.3 MPa (2,215 psia). The compressed CO_2 is transported via pipeline to a geologic sequestration field for injection into a saline aquifer, which is located within 50 miles of the plant.

Achieving a nominal 482 MWe net output with the above plant configuration results in an HHV thermal input requirement of 1,103,363 kWt (3,766 MMBtu/hr basis). This thermal input is achieved by burning NG at a rate of 165,182 lb/hr, which yields an HHV net plant heat rate of 7,813 Btu/kWh (HHV efficiency of 43.7 percent). The gross power output of 520 MWe is produced from the advanced CTGs and the STG. With an auxiliary power requirement of 38 MWe, the net plant output is 482 MWe. The summary of plant electrical generation performance is presented in Table 3.

Table 3. Plant Electrical Generation

	Electrical Summary
Advanced gas turbine x 2, MWe	370.2
Steam turbine, MWe	149.9
Gross power output, MWe	520.1
Auxiliary power requirement, MWe	(38.2)
Net power output, MWe	481.9

Environmental Performance

This study assumes the use of BACT to meet the emission requirements of the 2006 New Source Performance Standards.

NGCC plants use NG as their fuel, which creates negligible emissions of sulfur dioxide (SO_2), particulate matter (PM), and mercury (Hg); therefore, NGCC plants require no emissions control equipment or features to reduce these emissions. Nitrogen oxides emissions are controlled to 25 ppmvd (referenced to 15 percent O_2) by the DLN combustion system and then further reduced by an SCR system. The SCR system was designed for

90 percent NOx reduction while firing NG. The low NOx burner, together with the SCR, achieves the emission limit of 2.5 ppmvd (referenced to 15 percent O_2).

CO_2 capture is designed to recover 90 percent of the CO_2 in the FG stream by the Econamine FG Plus™ process.

A summary of the resulting air emissions is presented in Table 4.

Table 4. Air Emissions Summary @ 85% Capacity Factor

Pollutant	NGCC With CCS
CO_2	
• tons/year	166,172
• lb/MMBtu	11.9
• cost of CO_2 avoided ($/ton)	83
SO_2	
• tons/year	Negligible
• lb/MMBtu	Negligible
NOx	
• tons/year	127
• lb/MMBtu	0.009
PM (filterable)	
• tons/year	Negligible
• lb/MMBtu	Negligible
Hg	
• tons/year	Negligible
• lb/TBtu	Negligible

Cost Estimation

Plant size, primary/secondary fuel type, construction time total plant cost (TPC) basis year, plant CF, plant heat rate, fuel cost, plant book life, and plant in-service date were used as inputs to develop capital cost, production cost, and levelized cost-of-electricity (LCOE) estimates. Costs for the plant were based on adjusted vendor-furnished and actual cost data from recent design/build projects. Values for financial assumptions and a cost summary are shown in Table 5.

Project contingencies were added to each case to cover project uncertainty and the cost of any additional equipment that could result from detailed design. The project contingencies represent costs that are expected to occur. Project contingency was 13.3 percent of the TPC.

Process contingency is intended to compensate for uncertainties arising as a result of the state of technology development. Process contingencies represent 5 percent of the NGCC CCS case TPC and have been applied to the estimates as follows:

- CO_2 Removal System – 20 percent on all NGCC CCS cases.
- Instrumentation and Controls – 5 percent on the NGCC CCS cases.

This study assumes that each new plant would be dispatched any time it is available and would be capable of generating maximum capacity when online. Therefore, CF is assumed to equal availability and is 85 percent for NGCC cases. The assumed CF for NGCC cases is 85 percent.

For the NGCC cases that feature CCS, capital and operating costs were estimated for transporting CO_2 to an underground storage area, associated storage maintenance, and for monitoring beyond the expected life of the plant. These costs were then levelized over a 20-year period.

The calculated cost of transport, storage, and monitoring for CO_2 is $7.00/short ton, which adds 2.9 mills/kWh to the LCOE.

The 482 (net) MWe NGCC plant with CCS was projected to have a TPC of $1,172/kWe, resulting in a 20-year LCOE of 97.4 mills/kWh.

Table 5. Major Financial Assumptions and Resulting Cost Summary[1]

Major Assumptions					
Case:	**1x482 MWe net NGCC with CCS**				
Plant Size:	481.9	(MWe, net)	Heat Rate:	7,813	(Btu/kWh)
Primary/Secondary Fuel (type):	Natural Gas		Fuel Cost:	6.75	($/MMBtu)
Construction Duration:	3	(years)	Plant Life:	30	(years)
Total Plant Cost[2] Year:	2007	(January)	Plant in Service:	2010	(January)
Capacity Factor:	85	(%)	Capital Charge Factor:	17.5	(%)
Resulting Capital Investment (Levelized 2007 dollars)					**Mills/kWh**
Total Plant Cost					27.5
Resulting Operating Costs (Levelized 2007 dollars)					**Mills/kWh**
Fixed Operating Cost					2.6
Variable Operating Cost					3.0
Resulting Fuel Cost (Levelized 2007 dollars) @ $1.80 / MMBtu					**Mills/kWh**
					61.4
Resulting Levelized CO_2 Cost (2007 dollars)					**Mills/kWh**
					2.9
Total Levelized Busbar Cost of Power (2007 dollars)					**Mills/kWh**
					97.4

[1]Costs shown can vary ± 30%.

[2]Total plant cost includes all equipment (complete with initial chemical and catalyst loadings), materials, labor (direct and indirect), engineering and construction management, and contingencies (process and project). Owner's costs are not included.

Contacts

Julianne M. Klara
Senior Analyst
National Energy Technology Laboratory
626 Cochrans Mill Road
P.O. Box 10940
Pittsburgh, PA 15236
412-386-6089
julianne.klara@netl.doe.gov

John G. Wimer
Systems Analysis Team Lead
National Energy Technology Laboratory
3610 Collins Ferry Road
P. O. Box 880
Morgantown, WV 26507
304-285-4124
john.wimer@netl.doe.gov

Reference: Cost and Performance Baseline for Fossil Energy Plants, Vol. 1, DOE/NETL-2007/1281, May 2007.
B_NGCC_FClass_CCS_051607