NATIONAL ENERGY TECHNOLOGY LABORATORY

Cost and Performance of PC and IGCC Plants for a Range of Carbon Dioxide Capture

Revision 1 – September 19, 2013

Original – May 27, 2011

DOE/NETL-2011/1498

U.S. DEPARTMENT OF ENERGY

Disclaimer

This report was prepared as an account of work sponsored by an agency of the United States Government. Neither the United States Government nor any agency thereof, nor any of their employees, makes any warranty, express or implied, or assumes any legal liability or responsibility for the accuracy, completeness, or usefulness of any information, apparatus, product, or process disclosed, or represents that its use would not infringe privately owned rights. Reference therein to any specific commercial product, process, or service by trade name, trademark, manufacturer, or otherwise does not necessarily constitute or imply its endorsement, recommendation, or favoring by the United States Government or any agency thereof. The views and opinions of authors expressed therein do not necessarily state or reflect those of the United States Government or any agency thereof.

Cost and Performance of PC and IGCC Plants for a Range of Carbon Dioxide Capture

DOE/NETL-2011/1498

Revision 1 – September 19, 2013

Original – May 27, 2011

NETL Contact:

Kristin Gerdes
Office of Program, Planning and Analysis

Prepared by:

Research and Development Solutions, LLC (RDS)

James B. Black, formerly of Parsons Corporation

John L. Haslbeck, formerly of Parsons Corporation

Andrew P. Jones, formerly of Science Applications International Corporation

Wayne L. Lundberg, formerly of Science Applications International Corporation

Vasant Shah, formerly of Parsons Corporation

Updated by:

Energy Sector Planning and Analysis (ESPA)

Allison Kyle, Booz Allen Hamilton

Eric Lewis, Booz Allen Hamilton

National Energy Technology Laboratory

www.netl.doe.gov

Acknowledgments

This report was initially prepared by Research and Development Solutions, LLC (RDS) for the United States Department of Energy (DOE) National Energy Technology Laboratory (NETL). The report was updated by the Energy Sector Planning and Analysis (ESPA) for DOE NETL. This work was completed under DOE NETL Contract Number DE-FE0004001. This work was performed under ESPA Task 410.01.

The authors wish to acknowledge the excellent guidance, contributions, and cooperation of the NETL staff, particularly:

Eric Grol, NETL Technical Monitor

Revision Control

Revision 1: The Executive Summary and Section 2.7.1 were revised to correct and clarify text that explains the level of technology maturity reflected in the plant level cost estimates.

Table of Contents

TABLE OF CONTENTS ..... **I**
LIST OF EXHIBITS ..... **III**
LIST OF ACRONYMS AND ABBREVIATIONS ..... **X**
EXECUTIVE SUMMARY **1**
PULVERIZED COAL PLANTS 1
IGCC PLANTS 3
RESULTS 6
Performance *6*
Economics *8*
Cost and Performance Summary *14*
1. INTRODUCTION **19**
1.1 STUDY BACKGROUND 19
1.2 PROJECT OBJECTIVES 19
2. GENERAL EVALUATION BASIS **21**
2.1 SITE CHARACTERISTICS 25
2.2 COAL CHARACTERISTICS AND COST 27
2.3 DESIGN SORBENT COMPOSITION 31
2.4 ENVIRONMENTAL TARGETS 31
2.4.1 Supercritical PC Plant *32*
2.4.2 GEE IGCC Plant *33*
2.4.3 Carbon Dioxide *33*
2.5 CAPACITY FACTOR 34
2.6 RAW WATER WITHDRAWAL 35
2.7 COST ESTIMATING METHODOLOGY 35
2.7.1 Capital Costs *35*
2.7.2 System Code-of-Accounts *38*
2.7.3 CO_2 Removal Plant Maturity *38*
2.7.4 Contracting Strategy *38*
2.7.5 Estimate Scope *38*
2.7.6 Capital Cost Assumptions *39*
2.7.7 Operations and Maintenance Costs *45*
2.7.8 CO_2 Transport, Storage and Monitoring *46*
2.7.9 Finance Structure, Discounted Cash Flow Analysis, and COE *50*
2.8 IGCC STUDY COST ESTIMATES COMPARED TO INDUSTRY ESTIMATES 54
3. CASE 1 - SUPERCRITICAL PC WITH VARIABLE CO_2 CAPTURE **57**
3.1 SYSTEM DESCRIPTIONS 57
3.1.1 Coal and Sorbent Receiving and Storage *57*
3.1.2 Steam Generator and Ancillaries *57*
3.1.3 NO_x Control System *60*
3.1.4 Particulate Control *60*
3.1.5 Flue Gas Desulfurization *61*
3.1.6 Flue Gas System/Stack *65*
3.1.7 Carbon Dioxide Recovery Facility *65*
3.1.8 Steam Turbine Generator System *69*
3.1.9 Balance of Plant *70*
3.1.10 Accessory Electric Plant *74*
3.1.11 Instrumentation and Control *74*
3.2 SUPERCRITICAL PC CO_2 CAPTURE SENSITIVITY 74
3.2.1 CO_2 Capture with Partial Bypass Performance Results *77*
3.2.2 Full CO_2 Capture Performance Results *117*
3.2.3 Economic Analysis for the Supercritical PC Cases *151*

3.2.4 Capital and Operating Cost Results *151*
3.2.5 Supercritical PC Cost and Performance Summary *187*
4. CASE 2 – GEE IGCC WITH VARIABLE CO_2 CAPTURE 189
4.1 GASIFIER BACKGROUND 190
4.2 PROCESS DESCRIPTION 192
4.2.1 Coal Receiving and Storage *192*
4.2.2 Coal Grinding and Slurry Preparation *192*
4.2.3 Air Separation Unit (ASU) Choice and Integration *193*
4.2.4 Gasification *197*
4.2.5 Raw Gas Cooling/Particulate Removal *197*
4.2.6 Syngas Scrubber/Sour Water Stripper *198*
4.2.7 Water Gas Shift Reactors *198*
4.2.8 Mercury Removal *199*
4.2.9 Acid Gas Removal (AGR) Process Selection *200*
4.2.10 CO_2 Compression and Dehydration *208*
4.2.11 Sulfur Recovery/Tail Gas Cleanup Process Selection *208*
4.2.12 Slag Handling *211*
4.2.13 Power Island *212*
4.2.14 Steam Generation Island *218*
4.2.15 Accessory Electric Plant *221*
4.2.16 Instrumentation and Control *222*
4.3 GEE IGCC CO_2 CAPTURE SENSITIVITY 222
4.3.1 IGCC Design 1 – Without Water Gas Shift *224*
4.3.2 IGCC Design 2 – Single Water Gas Shift Reactor *257*
4.3.3 IGCC Design 3 – Two Water Gas Shift Reactors with Bypass *303*
4.3.4 IGCC Design 4 – Two Water Gas Shift Reactors Without Bypass *357*
4.3.5 Economic Analysis for the GEE IGCC Cases *395*
4.3.6 Capital and Operating Cost Results *395*
4.3.7 GEE IGCC Cost and Performance Summary *467*
5. RESULTS 469
5.2 PERFORMANCE 469
5.2.1 Energy Efficiency *469*
5.3 ECONOMICS 471
5.3.1 Total Overnight Cost *471*
5.3.2 Cost of Electricity *473*
5.3.3 CO_2 Avoided Costs *476*
5.4 COST AND PERFORMANCE SUMMARY 478
5.4.1 Supercritical PC Cases *478*
5.4.2 GEE IGCC Cases *479*
5.4.3 SCPC and IGCC Comparisons *479*
APPENDIX A 483
Supercritical PC Cost Algorithms *484*
GEE IGCC Cost Algorithms *489*
6. REFERENCES 495

List of Exhibits

Exhibit ES-1 Case 1 Supercritical PC Plant Configuration Summary 2
Exhibit ES-2 Case 2 GEE IGCC Plant Configuration Summary 4
Exhibit ES-3 Net Efficiency and Cost as a Function of WGS Bypass Ratio for 60% CO_2 Removal with IGCC Design 3 5
Exhibit ES-4 Process Configurations for IGCC D2 5
Exhibit ES-5 Process Configurations for IGCC D3 6
Exhibit ES-6 Supercritical PC Net Plant Efficiency (HHV) 7
Exhibit ES-7 IGCC Net Plant Efficiency (HHV) 8
Exhibit ES-8 Supercritical PC Total Overnight Cost 9
Exhibit ES-9 IGCC Total Overnight Cost 10
Exhibit ES-10 Supercritical PC Cost of Electricity 11
Exhibit ES-11 IGCC Cost of Electricity 12
Exhibit ES-12 Supercritical PC CO_2 Avoided Costs 13
Exhibit ES-13 IGCC CO_2 Avoided Costs 14
Exhibit ES-14 Cost and Performance Results for the Supercritical PC Cases 16
Exhibit ES-15 Cost and Performance Results for the GEE IGCC Cases 17
Exhibit 2-1 Case 1 Supercritical PC Plant Configuration Summary 21
Exhibit 2-2 Case 2 GEE IGCC Plant Configuration Summary 23
Exhibit 2-3 Net Efficiency and Cost as a Function of WGS Bypass Ratio for 60% CO_2 Removal with IGCC Design 3 24
Exhibit 2-4 Process Configurations for IGCC D2 24
Exhibit 2-5 Process Configurations for IGCC D3 25
Exhibit 2-6 Site Ambient Conditions 26
Exhibit 2-7 Site Characteristics 26
Exhibit 2-8 Design Coal 27
Exhibit 2-9 Probability Distribution of Mercury Concentration in the Illinois No. 6 Coal 30
Exhibit 2-10 Sorbent Analysis 31
Exhibit 2-11 Standards of Performance for Electric Utility Steam Generating Units 32
Exhibit 2-12 Environmental Targets for PC Cases 33
Exhibit 2-13 Environmental Targets for IGCC Cases 33
Exhibit 2-14 Capital Cost Levels and their Elements 36
Exhibit 2-15 Features of an AACE Class 4 Cost Estimate 37
Exhibit 2-16 AACE Guidelines for Process Contingency 41
Exhibit 2-17 TASC/TOC Factors 42
Exhibit 2-18 Owner's Costs Included in TOC 43
Exhibit 2-19 CO_2 Pipeline Specification 47
Exhibit 2-20 Deep, Saline Aquifer Specification 48
Exhibit 2-21 Global Economic Assumptions 51
Exhibit 2-22 Financial Structure for Investor Owned Utility High Risk Projects 52
Exhibit 2-23 Capital Charge Factors for COE Equation 53
Exhibit 3-1 Typical B&W Wet FGD Process Flow Diagram 62
Exhibit 3-2 Wet Scrubber Arrangement 63
Exhibit 3-3 Fluor Econamine FG Plus^{SM} Typical Flow Diagram 67
Exhibit 3-4 CO_2 Compressor Interstage Pressures 69
Exhibit 3-5 Supercritical PC Combustion Configuration Modeling Assumptions 76
Exhibit 3-6 Cases 1A Through 1D Process Block Flow Diagram, Supercritical PC with CO_2 Capture Bypass 78

Exhibit 3-7 Case 1A Stream Table, Supercritical PC with 30% CO_2 Capture 79
Exhibit 3-8 Case 1B Stream Table, Supercritical PC with 50% CO_2 Capture 81
Exhibit 3-9 Case 1C Stream Table, Supercritical PC with 70% CO_2 Capture 83
Exhibit 3-10 Case 1D Stream Table, Supercritical PC with 85% CO_2 Capture 85
Exhibit 3-11 Cases 1A Through 1D Performance Modeling Results 87
Exhibit 3-12 Cases 1A through 1D Estimated Air Emission Rates 90
Exhibit 3-13 Cases 1A through 1D Carbon Balance 91
Exhibit 3-14 Cases 1A through 1D Sulfur Balance 91
Exhibit 3-15 Case 1A (30%) Water Balance 92
Exhibit 3-16 Case 1B (50%) Water Balance 92
Exhibit 3-17 Case 1C (70%) Water Balance 93
Exhibit 3-18 Case 1D (85%) Water Balance 93
Exhibit 3-19 Case 1A (30%) Heat and Mass Balance, Supercritical PC Boiler and Gas Cleanup Systems 95
Exhibit 3-20 Case 1A (30%) Heat and Mass Balance, Power Block Systems 96
Exhibit 3-21 Case 1B (50%) Heat and Mass Balance, Supercritical PC Boiler and Gas Cleanup Systems 97
Exhibit 3-22 Case 1B (50%) Heat and Mass Balance, Power Block Systems 98
Exhibit 3-23 Case 1C (70%) Heat and Mass Balance, Supercritical PC Boiler and Gas Cleanup Systems 99
Exhibit 3-24 Case 1C (70%) Heat and Mass Balance, Power Block Systems 100
Exhibit 3-25 Case 1D (85%) Heat and Mass Balance, Supercritical PC Boiler and Gas Cleanup Systems 101
Exhibit 3-26 Case 1D (85%) Heat and Mass Balance, Power Block Systems 102
Exhibit 3-27 Case 1A (30%) Energy Balance 103
Exhibit 3-28 Case 1B (50%) Energy Balance 104
Exhibit 3-29 Case 1C (70%) Energy Balance 105
Exhibit 3-30 Case 1D (85%) Energy Balance 106
Exhibit 3-31 Case 1A Energy Balance Sankey Diagram 107
Exhibit 3-32 Case 1B Energy Balance Sankey Diagram 107
Exhibit 3-33 Case 1C Energy Balance Sankey Diagram 108
Exhibit 3-34 Case 1D Energy Balance Sankey Diagram 108
Exhibit 3-35 Cases 1E through 1G Process Block Flow Diagram, Supercritical PC with CO_2 Capture .. 118
Exhibit 3-36 Case 1E Stream Table, Supercritical PC with 90% CO_2 Capture 119
Exhibit 3-37 Case 1F Stream Table, Supercritical PC with 95% CO_2 Capture 121
Exhibit 3-38 Case 1G Stream Table, Supercritical PC with 99% CO_2 Capture 123
Exhibit 3-39 Cases 1E through 1G Performance Modeling Results 125
Exhibit 3-40 Cases 1E through 1G Estimated Air Emission Rates 128
Exhibit 3-41 Cases 1E through 1G Carbon Balance 129
Exhibit 3-42 Cases 1E through 1G Sulfur Balance 129
Exhibit 3-43 Case 1E (90%) Water Balance 130
Exhibit 3-44 Case 1F (95%) Water Balance 130
Exhibit 3-45 Case 1G (99%) Water Balance 131
Exhibit 3-46 Case 1E (90%) Heat and Mass Balance, Supercritical PC Boiler and Gas Cleanup Systems 133
Exhibit 3-47 Case 1E (90%) Heat and Mass Balance, Power Block Systems 134
Exhibit 3-48 Case 1F (95%) Heat and Mass Balance, Supercritical PC Boiler and Gas Cleanup Systems 135
Exhibit 3-49 Case 1F (95%) Heat and Mass Balance, Power Block Systems 136
Exhibit 3-50 Case 1G (99%) Heat and Mass Balance, Supercritical PC Boiler and Gas Cleanup Systems 137

Exhibit 3-51 Case 1G (99%) Heat and Mass Balance, Power Block Systems 138
Exhibit 3-52 Case 1E (90%) Energy Balance 139
Exhibit 3-53 Case 1F (95%) Energy Balance 140
Exhibit 3-54 Case 1G (99%) Energy Balance 141
Exhibit 3-55 Case 1E Energy Balance Sankey Diagram 142
Exhibit 3-56 Case 1F Energy Balance Sankey Diagram 142
Exhibit 3-57 Case 1G Energy Balance Sankey Diagram 143
Exhibit 3-58 Case 1A (30%) Capital Costs 152
Exhibit 3-59 Case 1A Initial and Annual O&M Expenses 156
Exhibit 3-60 Case 1B (50%) Capital Costs 157
Exhibit 3-61 Case 1B Initial and Annual O&M Expenses 161
Exhibit 3-62 Case 1C (70%) Capital Costs 162
Exhibit 3-63 Case 1C Initial and Annual O&M Expenses 166
Exhibit 3-64 Case 1D (85%) Capital Costs 167
Exhibit 3-65 Case 1D Initial and Annual O&M Expenses 171
Exhibit 3-66 Case 1E (90%) Capital Costs 172
Exhibit 3-67 Case 1E Initial and Annual O&M Expenses 176
Exhibit 3-68 Case 1F (95%) Capital Costs 177
Exhibit 3-69 Case 1F Initial and Annual O&M Expenses 181
Exhibit 3-70 Case 1G (99%) Capital Costs 182
Exhibit 3-71 Case 1G Initial and Annual O&M Expenses 186
Exhibit 3-72 Cost and Performance Results for the Supercritical PC Cases 187
Exhibit 4-1 Typical ASU Process Schematic 196
Exhibit 4-2 Flow Diagram for a Conventional AGR Unit 201
Exhibit 4-3 Common Chemical Reagents Used in AGR Processes 202
Exhibit 4-4 Physical Solvent AGR Process Simplified Flow Diagram 204
Exhibit 4-5 Common Physical Solvents Used in AGR Processes 204
Exhibit 4-6 Common Mixed Solvents Used in AGR Processes 205
Exhibit 4-7 Equilibrium Solubility Data on H_2S and CO_2 in Various Solvents 206
Exhibit 4-8 Generic Two-Stage Selexol™ Process Flow Diagram 208
Exhibit 4-9 Typical Three-Stage Claus Sulfur Plant 210
Exhibit 4-10 Advanced F Class Combustion Turbine Performance Characteristics Using Natural Gas .. 213
Exhibit 4-11 Combustion Turbine Typical Scope of Supply 213
Exhibit 4-12 Typical Fuel Specification for F-Class Machines 216
Exhibit 4-13 Allowable Gas Fuel Contaminant Level for F-Class Machines 217
Exhibit 4-14 Case 2 GEE IGCC Plant Configuration Summary 224
Exhibit 4-15 Case 2 D1A Process Block Flow Diagram, IGCC without WGS (0% CO_2 Removal) 226
Exhibit 4-16 Case 2 D1A Stream Table, IGCC without CO_2 Capture 227
Exhibit 4-17 Case 2 D1B Process Block Flow Diagram, IGCC without WGS (25% CO_2 Removal) 229
Exhibit 4-18 Case 2 D1B Stream Table, IGCC with 25% CO_2 Capture 230
Exhibit 4-19 Case 2 D1 Performance Modeling Results 232
Exhibit 4-20 Case 2 D1 Estimated Air Emission Rates 234
Exhibit 4-21 Case 2 D1 Carbon Balance 235
Exhibit 4-22 Case 2 D1 Sulfur Balance 235
Exhibit 4-23 Case 2 D1A (0%) Water Balance 236
Exhibit 4-24 Case 2 D1B (25%) Water Balance 237
Exhibit 4-25 Case 2 D1A (0%) Heat and Mass Balance, GEE Gasifier and ASU 239
Exhibit 4-26 Case 2 D1A (0%) Heat and Mass Balance, Syngas Cleanup 240

Exhibit 4-27 Case 2 D1A (0%) Heat and Mass Balance, Power Block 241
Exhibit 4-28 Case 2 D1B (25%) Heat and Mass Balance, GEE Gasifier and ASU 242
Exhibit 4-29 Case 2 D1B (25%) Heat and Mass Balance, Syngas Cleanup 243
Exhibit 4-30 Case 2 D1B (25%) Heat and Mass Balance, Power Block 244
Exhibit 4-31 Case 2 D1A (0%) Energy Balance 245
Exhibit 4-32 Case 2 D1B (25%) Energy Balance 246
Exhibit 4-33 Case 2 D1A Energy Balance Sankey Diagram 247
Exhibit 4-34 Case 2 D1B Energy Balance Sankey Diagram 247
Exhibit 4-35 Case 2 D2 Process Block Flow Diagram, IGCC with Single WGS Reactor and Bypass 258
Exhibit 4-36 Case 2 D2A Stream Table, 25% CO_2 Removal with Single WGS Bypass 259
Exhibit 4-37 Case 2 D2B Stream Table, 45% CO_2 Capture with Single WGS Bypass 261
Exhibit 4-38 Case 2 D2C Stream Table, 60% CO_2 Capture with Single WGS Bypass 263
Exhibit 4-39 Case 2 D2D Stream Table, 75% CO_2 Capture with Single WGS Bypass 265
Exhibit 4-40 Case 2 D2 Performance Modeling Results 267
Exhibit 4-41 Case 2 D2 Estimated Air Emission Rates 270
Exhibit 4-42 Case 2 D2 Carbon Balance 271
Exhibit 4-43 Case 2 D2 Sulfur Balance 271
Exhibit 4-44 Case 2 D2A (25%) Water Balance 272
Exhibit 4-45 Case 2 D2B (45%) Water Balance 273
Exhibit 4-46 Case 2 D2C (60%) Water Balance 274
Exhibit 4-47 Case 2 D2D (75%) Water Balance 275
Exhibit 4-48 Case 2 D2A (25%) Heat and Mass Balance, GEE Gasifier and ASU 277
Exhibit 4-49 Case 2 D2A (25%) Heat and Mass Balance, Syngas Cleanup 278
Exhibit 4-50 Case 2 D2A (25%) Heat and Mass Balance, Power Block 279
Exhibit 4-51 Case 2 D2B (45%) Heat and Mass Balance, GEE Gasifier and ASU 280
Exhibit 4-52 Case 2 D2B (45%) Heat and Mass Balance, Syngas Cleanup 281
Exhibit 4-53 Case 2 D2B (45%) Heat and Mass Balance, Power Block 282
Exhibit 4-54 Case 2 D2C (60%) Heat and Mass Balance, GEE Gasifier and ASU 283
Exhibit 4-55 Case 2 D2C (60%) Heat and Mass Balance, Syngas Cleanup 284
Exhibit 4-56 Case 2 D2C (60%) Heat and Mass Balance, Power Block 285
Exhibit 4-57 Case 2 D2D (75%) Heat and Mass Balance, GEE Gasifier and ASU 286
Exhibit 4-58 Case 2 D2D (75%) Heat and Mass Balance, Syngas Cleanup 287
Exhibit 4-59 Case 2 D2D (75%) Heat and Mass Balance, Power Block 288
Exhibit 4-60 Case 2 D2A (25%) Energy Balance 289
Exhibit 4-61 Case 2 D2B (45%) Energy Balance 290
Exhibit 4-62 Case 2 D2C (60%) Energy Balance 291
Exhibit 4-63 Case 2 D2D (75%) Energy Balance 292
Exhibit 4-64 Case 2 D2A Energy Balance Sankey Diagram 293
Exhibit 4-65 Case 2 D2B Energy Balance Sankey Diagram 293
Exhibit 4-66 Case 2 D2C Energy Balance Sankey Diagram 294
Exhibit 4-67 Case 2 D2D Energy Balance Sankey Diagram 294
Exhibit 4-68 Case 2 D3 Process Block Flow Diagram, IGCC with Two WGS Reactors and Bypass 304
Exhibit 4-69 Case 2 D3A Stream Table, 25% CO_2 Removal with Two WGS Bypass 305
Exhibit 4-70 Case 2 D3B Stream Table, 45% CO_2 Capture with Two WGS Bypass 307
Exhibit 4-71 Case 2 D3C Stream Table, 60% CO_2 Capture with Two WGS Bypass 309
Exhibit 4-72 Case 2 D3D Stream Table, 75% CO_2 Capture with Two WGS Bypass 311
Exhibit 4-73 Case 2 D3E Stream Table, 85% CO_2 Capture with Two WGS Bypass 313
Exhibit 4-74 Case 2 D3 Performance Modeling Results 315

Exhibit 4-75 Case 2 D3 Estimated Air Emission Rates 318
Exhibit 4-76 Case 2 D3 Carbon Balance 319
Exhibit 4-77 Case 2 D3 Sulfur Balance 319
Exhibit 4-78 Case 2 D3A (25%) Water Balance 320
Exhibit 4-79 Case 2 D3B (45%) Water Balance 321
Exhibit 4-80 Case 2 D3C (60%) Water Balance 322
Exhibit 4-81 Case 2 D3D (75%) Water Balance 323
Exhibit 4-82 Case 2 D3E (85%) Water Balance 324
Exhibit 4-83 Case 2 D3A (25%) Heat and Mass Balance, GEE Gasifier and ASU 325
Exhibit 4-84 Case 2 D3A (25%) Heat and Mass Balance, Syngas Cleanup 326
Exhibit 4-85 Case 2 D3A (25%) Heat and Mass Balance, Power Block 327
Exhibit 4-86 Case 2 D3B (45%) Heat and Mass Balance, GEE Gasifier and ASU 328
Exhibit 4-87 Case 2 D3B (45%) Heat and Mass Balance, Syngas Cleanup 329
Exhibit 4-88 Case 2 D3B (45%) Heat and Mass Balance, Power Block 330
Exhibit 4-89 Case 2 D3C (60%) Heat and Mass Balance, GEE Gasifier and ASU 331
Exhibit 4-90 Case 2 D3C (60%) Heat and Mass Balance, Syngas Cleanup 332
Exhibit 4-91 Case 2 D3C (60%) Heat and Mass Balance, Power Block 333
Exhibit 4-92 Case 2 D3D (75%) Heat and Mass Balance, GEE Gasifier and ASU 334
Exhibit 4-93 Case 2 D3D (75%) Heat and Mass Balance, Syngas Cleanup 335
Exhibit 4-94 Case 2 D3D (75%) Heat and Mass Balance, Power Block 336
Exhibit 4-95 Case 2 D3E (85%) Heat and Mass Balance, GEE Gasifier and ASU 337
Exhibit 4-96 Case 2 D3E (85%) Heat and Mass Balance, Syngas Cleanup 338
Exhibit 4-97 Case 2 D3E (85%) Heat and Mass Balance, Power Block 339
Exhibit 4-98 Case 2 D3A (25%) Energy Balance 341
Exhibit 4-99 Case 2 D3B (45%) Energy Balance 342
Exhibit 4-100 Case 2 D3C (60%) Energy Balance 343
Exhibit 4-101 Case 2 D3D (75%) Energy Balance 344
Exhibit 4-102 Case 2 D3E (85%) Energy Balance 345
Exhibit 4-103 Case 2 D3A Energy Balance Sankey Diagram 346
Exhibit 4-104 Case 2 D3B Energy Balance Sankey Diagram 346
Exhibit 4-105 Case 2 D3C Energy Balance Sankey Diagram 347
Exhibit 4-106 Case 2 D3D Energy Balance Sankey Diagram 347
Exhibit 4-107 Case 2 D3E Energy Balance Sankey Diagram 348
Exhibit 4-108 Case 2 D4 Process Block Flow Diagram, IGCC with Two WGS Reactors 358
Exhibit 4-109 Case 2 D4A Stream Table, 90% CO_2 Removal 359
Exhibit 4-110 Case 2 D4B Stream Table, 95% CO_2 Capture 361
Exhibit 4-111 Case 2 D4C Stream Table, 97% CO_2 Capture 363
Exhibit 4-112 Case 2 D4 Performance Modeling Results 365
Exhibit 4-113 Case 2 D4 Estimated Air Emission Rates 368
Exhibit 4-114 Case 2 D4 Carbon Balance 369
Exhibit 4-115 Case 2 D4 Sulfur Balance 369
Exhibit 4-116 Case 2 D4A (90%) Water Balance 370
Exhibit 4-117 Case 2 D4B (95%) Water Balance 371
Exhibit 4-118 Case 2 D4C (97%) Water Balance 372
Exhibit 4-119 Case 2 D4A (90%) Heat and Mass Balance, GEE Gasifier and ASU 373
Exhibit 4-120 Case 2 D4A (90%) Heat and Mass Balance, Syngas Cleanup 374
Exhibit 4-121 Case 2 D4A (90%) Heat and Mass Balance, Power Block 375
Exhibit 4-122 Case 2 D4B (95%) Heat and Mass Balance, GEE Gasifier and ASU 376

Exhibit 4-123 Case 2 D4B (95%) Heat and Mass Balance, Syngas Cleanup 377
Exhibit 4-124 Case 2 D4B (95%) Heat and Mass Balance, Power Block..... 378
Exhibit 4-125 Case 2 D4C (97%) Heat and Mass Balance, GEE Gasifier and ASU 379
Exhibit 4-126 Case 2 D4C (97%) Heat and Mass Balance, Syngas Cleanup 380
Exhibit 4-127 Case 2 D4C (97%) Heat and Mass Balance, Power Block..... 381
Exhibit 4-128 Case 2 D4A (90%) Energy Balance 383
Exhibit 4-129 Case 2 D4B (95%) Energy Balance..... 384
Exhibit 4-130 Case 2 D4C (97%) Energy Balance..... 385
Exhibit 4-131 Case 2 D4A Energy Balance Sankey Diagram..... 386
Exhibit 4-132 Case 2 D4B Energy Balance Sankey Diagram..... 386
Exhibit 4-133 Case 2 D4C Energy Balance Sankey Diagram..... 387
Exhibit 4-134 Case 2 D1A (0%) Capital Costs 396
Exhibit 4-135 Case 2 D1A Initial and Annual O&M Expenses 400
Exhibit 4-136 Case 2 D1B (25%) Capital Costs..... 401
Exhibit 4-137 Case 2 D1B Initial and Annual O&M Expenses 405
Exhibit 4-138 Case 2 D2A (25%) Capital Costs 406
Exhibit 4-139 Case 2 D2A Initial and Annual O&M Expenses 410
Exhibit 4-140 Case 2 D2B (45%) Capital Costs..... 411
Exhibit 4-141 Case 2 D2B Initial and Annual O&M Expenses 415
Exhibit 4-142 Case 2 D2C (60%) Capital Costs..... 416
Exhibit 4-143 Case 2 D2C Initial and Annual O&M Expenses 420
Exhibit 4-144 Case 2 D2D (75%) Capital Costs 421
Exhibit 4-145 Case 2 D2D Initial and Annual O&M Expenses 425
Exhibit 4-146 Case 2 D3A (25%) Capital Costs 426
Exhibit 4-147 Case 2 D3A Initial and Annual O&M Expenses 430
Exhibit 4-148 Case 2 D3B (45%) Capital Costs..... 431
Exhibit 4-149 Case 2 D3B Initial and Annual O&M Expenses 435
Exhibit 4-150 Case 2 D3C (60%) Capital Costs..... 436
Exhibit 4-151 Case 2 D3C Initial and Annual O&M Expenses 440
Exhibit 4-152 Case 2 D3D (75%) Capital Costs 441
Exhibit 4-153 Case 2 D3D Initial and Annual O&M Expenses 445
Exhibit 4-154 Case 2 D3E (85%) Capital Costs..... 446
Exhibit 4-155 Case 2 D3E Initial and Annual O&M Expenses 450
Exhibit 4-156 Case 2 D4A (90%) Capital Costs 451
Exhibit 4-157 Case 2 D4A Initial and Annual O&M Expenses 455
Exhibit 4-158 Case 2 D4B (95%) Capital Costs..... 456
Exhibit 4-159 Case 2 D4B Initial and Annual O&M Expenses 460
Exhibit 4-160 Case 2 D4C (97%) Capital Costs..... 461
Exhibit 4-161 Case 2 D4C Initial and Annual O&M Expenses 465
Exhibit 4-162 Cost and Performance Results for the GEE IGCC Cases..... 467
Exhibit 5-1 Net Plant HHV Efficiency for the Supercritical PC Cases..... 470
Exhibit 5-2 Net Plant HHV Efficiency for the GEE IGCC Cases..... 471
Exhibit 5-3 TOC for the Supercritical PC Cases 472
Exhibit 5-4 TOC for the GEE IGCC Cases 473
Exhibit 5-5 COE for the Supercritical PC Cases 474
Exhibit 5-6 COE for the GEE IGCC Cases 475
Exhibit 5-7 CO_2 TS&M COE for the Supercritical PC Cases 475
Exhibit 5-8 CO_2 TS&M COE for the GEE IGCC Cases 476

Exhibit 5-9 CO_2 Avoided Costs for the Supercritical PC Cases 477
Exhibit 5-10 CO_2 Avoided Costs for the GEE IGCC Cases 478
Exhibit 5-11 Cost and Performance Results for the Supercritical PC Cases 481
Exhibit 5-12 Cost and Performance Results for the GEE IGCC Cases 482

Appendix A- 1 Supercritical PC CO_2 Capture & Compression Cost, $000 484
Appendix A- 2 Supercritical PC CO_2 Capture & Compression Cost, $/kW 484
Appendix A- 3 Supercritical PC Total Overnight Cost, $000 485
Appendix A- 4 Supercritical PC Total Overnight Cost, $/kW 485
Appendix A- 5 Supercritical PC Incremental Capital Cost, $000 486
Appendix A- 6 Supercritical PC Incremental Capital Cost, $/kW 486
Appendix A- 7 Supercritical PC COE, mills/kWh 487
Appendix A- 8 Supercritical PC Incremental COE, mills/kWh 487
Appendix A- 9 Supercritical PC Percent Increase in COE 488
Appendix A- 10 Supercritical PC CO_2 Capture Avoided Costs 488
Appendix A- 11 GEE IGCC CO_2 Capture & Compression Cost, $000 489
Appendix A- 12 GEE IGCC CO_2 Capture & Compression Cost, $/kW 489
Appendix A- 13 GEE IGCC Total Overnight Cost, $000 490
Appendix A- 14 GEE IGCC Total Overnight Cost, $/kW 490
Appendix A- 15 GEE IGCC Incremental Capital Cost, $000 491
Appendix A- 16 GEE IGCC Incremental Capital Cost, $/kW 491
Appendix A- 17 GEE IGCC COE, mills/kWh 492
Appendix A- 18 GEE IGCC Incremental COE, mills/kWh 492
Appendix A- 19 GEE IGCC Percent Increase in COE 493
Appendix A- 20 GEE IGCC CO_2 Capture Avoided Costs 493

List of Acronyms and Abbreviations

AACE	Association for the Advancement of Cost Engineering
acfm	Actual cubic foot per minute
AEO	Annual Energy Outlook
AGR	Acid gas removal
AR	As Received
ASU	Air separation unit
BACT	Best available control technology
BEC	Bare erected cost
BFD	Block flow diagram
BFW	Boiler feed water
Btu	British thermal unit
Btu/h	British thermal unit per hour
Btu/kWh	British thermal unit per kilowatt hour
Btu/lb	British thermal unit per pound
CA	California
CCF	Capital Charge Factor
CCS	Carbon Capture and Sequestration
CF	Capacity factor
CFM	Cubic feet per minute
CFR	Code of Federal Regulations
CGE	Cold gas efficiency
CH_4	Methane
cm	Centimeter
CO_2	Carbon dioxide
CO_{2e}	Carbon dioxide equivalent
COE	Cost of electricity
CoP	ConocoPhillips
COS	Carbonyl sulfide
CRP	Conservation Reserve Program
CRT	Cathode ray tube
CT	Combustion turbine
CTG	Combustion Turbine-Generator
CWT	Cold water temperature
DCS	Distributed control system
Dia.	Diameter
DOE	Department of Energy
EAF	Equivalent availability factor
E-Gas™	ConocoPhillips gasifier technology
EIA	Energy Information Administration
EPA	Environmental Protection Agency
EPC	Engineer/Procure/Construct

EPCM	Engineering/Procurement/Construction Management
EPRI	Electric Power Research Institute
FOAK	First of a kind
ft	Foot, Feet
GADS	Generating Availability Data System
gal	Gallon
GDP	Gross domestic product
GEE	General Electric Energy
GHG	Greenhouse gas
gpm	Gallons per minute
GT	Gas turbine
GW	Gigawatt
GWP	Global Warming Potential
h	Hour
H_2	Hydrogen
H_2S	Hydrogen sulfide
Hg	Mercury
HHV	Higher heating value
hp	Horsepower
HP	High pressure
HRSG	Heat recovery steam generator
HVAC	Heating, ventilating, and air conditioning
IGVs	Inlet guide vanes
IGCC	Integrated gasification combined cycle
IOU	Investor-owned utility
IP	Intermediate pressure
ISO	International Standards Organization
kg/GJ	Kilogram per gigajoule
kg/h	Kilogram per hour
kJ	Kilojoules
kJ/kg	Kilojoules per kilogram
KO	Knockout
kPa	Kilopascal absolute
kV	Kilovolt
kW	Kilowatt
kWe	Kilowatts electric
kWh	Kilowatt-hour
kWt	Kilowatts thermal
LAER	Lowest Achievable Emission Rate
lb	Pound
lb/h	Pounds per hour
lb/MMBtu	Pounds per million British thermal units
lb/MWh	Pounds per megawatt hour

LF_{Fn}	Levelization factor for category n fixed operating cost
LF_{Vn}	Levelization factor for category n variable operating cost
LHV	Lower heating value
LNB	Low NOx burner
LP	Low pressure
m	Meters
MM$	Millions of Dollars
m/min	Meters per minute
m^3/min	Cubic meter per minute
MDEA	Methyldiethanolamine
MEA	Monoethanolamine
MHz	Megahertz
MMBtu	Million British thermal units (also shown as 10^6 Btu)
MMBtu/h	Million British thermal units (also shown as 10^6 Btu) per hour
MPa	Megapascals
Mpg	Miles per gallon
MW	Megawatt
MWe	Megawatts electric
MWh	Megawatt-hour
NAAQS	National ambient air quality standard
net-MWh	Net megawatt-hour
NERC	North American Electric Reliability Council
NETL	National Energy Technology Laboratory
NGCC	Natural gas combined cycle
NOAK	Nth of a kind
NOx	Oxides of nitrogen
NSPS	New Source Performance Standards
NSR	New Source Review
NREL	National Renewable Energy Laboratory
O&M	Operation and maintenance
OC_{Fn}	Category n fixed operating cost for the initial year of operation
PC	Pulverized coal
PM	Particulate matter
PM_{10}	Particulate matter measuring 10 μm or less
POTW	Publicly Owned Treatment Works
ppm	Parts per million
ppmd	Parts per million, dry
ppmv	Parts per million, volume
PRB	Powder River Basin coal region
PSD	Prevention of Significant Deterioration
psia	Pounds per square inch absolute
psig	Pounds per square inch gage
R&D	Research and Development

RDS	Research and Development Solutions, LLC
SC	Supercritical
SCR	Selective catalytic reduction
SGS	Sour gas shift
SO_2	Sulfur dioxide
STG	Steam turbine generator
SWS	Sour water stripper
TASC	Total As-Spent Capital
TBtu	Trillion British thermal unit
TGTU	Tail gas treating unit
TOC	Total overnight cost
Tonne	Metric Ton (1000 kg)
TPC	Total plant cost
TPD	Tons per day
TPH	Tons per hour
TPI	Total plant investment
TS&M	Transport, storage and monitoring
TWh	Terawatt-hour
USDA	United States Department of Agriculture
vol%	Volume percent
WGS	Water gas shift
wt%	Weight percent
$/AR ton	Dollars per As Received ton
$/dry ton	Dollars per dry ton
$/kW	Dollars per kilowatt
$/MMBtu	Dollars per million British thermal units
$/MMkJ	Dollars per million kilojoule
$/MWh	Dollars per Megawatt-hour
$/ton	Dollars per ton
5-10s	Fifty hour work weeks (5 days, 10 hours/day)

This page intentionally left blank.

Executive Summary

The objective of this study was to establish the cost and performance for a range of carbon dioxide (CO_2) capture levels for new supercritical (SC) pulverized coal (PC) and integrated gasification combined cycle (IGCC) power plants. The SC PC cases (Case 1 series) utilize Fluor's Econamine FG Plus^{SM} process for post-combustion CO_2 capture via temperature swing absorption with a 30 wt% monoethanolamine (MEA) solution as the chemical solvent. The IGCC cases (Case 2 series) employ a slurry-fed, entrained-flow General Electric Energy (GEE) gasifier and leverage UOP's (formerly Universal Oil Products) two-stage Selexol™ process for bulk CO_2 capture and selective hydrogen sulfide (H_2S) removal via pressure swing absorption. The Selexol™ process uses dimethyl ether of polyethylene glycol (DEPG) as a physical solvent for pre-combustion capture.

The CO_2 capture sensitivity analysis includes an evaluation of the cost, performance, and environmental profile of these facilities while operating at 0 feet of elevation (ISO conditions) in the Illinois coal basin and firing Illinois #6 medium-sulfur bituminous coal. The study includes compression of the captured CO_2 to pipeline pressure of 15.2 MPa (2,215 psia), pipeline transport 80 kilometers (50 miles), storage in a saline formation at a depth of 1,239 meters (4,055 ft), and monitoring for 80 years. The site will have appropriate access to rail transportation for delivery of coal. All local coal handling facilities are included in the design and cost estimation portion of this study. The methodology included performing steady-state simulations of the technology using the ASPEN Plus® (Aspen) modeling program. Each configuration was tailored to achieve a specific level of carbon capture.

Pulverized Coal Plants

An Aspen model for a SC PC power plant, coupled with detailed simulations of the Econamine FG Plus^{SM} process using Optimized Gas Treating's ProTreat™, was utilized to evaluate the technical and economic performance of post-combustion CO_2 capture in the following increments: 30, 50, 70, 85, 90, 95, and 99 percent capture. For control of nitrogen oxides (NO_x) emissions, a combination of low-NO_x burners (LNB) with overfire air (OFA) and a selective catalytic reduction (SCR) system is used. A fabric filter is employed to minimize particulate matter emissions. A wet limestone flue gas desulfurization (FGD) system, in conjunction with a sodium hydroxide polishing scrubber, is used to ensure that the flue gas entering the Econamine system has a sulfur dioxide (SO_2) concentration of 10 ppmv or less. The SC PC descriptions (herein referred to as Case 1) are summarized in Exhibit ES-1.

Exhibit ES-1 Case 1 Supercritical PC Plant Configuration Summary

Case	CO_2 Capture	Intended Storage	Boiler	Steam psig/°F/°F	Oxidant	NO_x Control	Sulfur Control
1A	30%	Saline Formation	Wall-fired, PC	3500/1100/1100	Air	LNB/OFA/SCR 0.07 lb/MMBtu	Wet FGD 0.1 lb/MMBtu
1B	50%						
1C	70%						
1D	85%						
1E	90%						
1F	95%						
1G	99%						

Optimized Gas Treating's rate-based ProTreat™ software was used to generate performance estimates for the Econamine FG Plus^{SM} process. Initially, 90 percent CO_2 removal was modeled by adjusting three key process parameters: (1) the MEA solution circulation rate; (2) the reboiler steam flow rate; and (3) the height of packing material in the absorption and stripping columns. For higher levels of CO_2 removal (greater than 90 percent), the MEA and reboiler steam flow rates were increased, as well as the absorber/stripper column packing height.

Recent studies typically focus on 90 percent CO_2 capture from coal-fired power plants, but for the cases in this study that focus on less than 90 percent, two options exist. The first option is to pass the entire flue gas stream through the amine scrubbing unit, but at reduced solvent circulation rates. The second is to maintain the same high solvent circulation rate and stripping steam requirement, but only treat a portion of the flue gas by bypassing part of the gas stream around the scrubber. A literature search was conducted to verify that less than 90 percent CO_2 capture is most economical using a "slip-stream" (or bypass) approach. According to multiple peer-reviewed studies the slip-stream approach is indeed more cost-effective for lower degrees of capture [1, 2, 3]. The cost of CO_2 capture with an amine scrubbing process is dependent on the volume of gas being treated, and a reduction in flue gas flow rate will: (1) decrease the quantity of energy consumed by flue gas blowers; (2) reduce the size of the CO_2 absorption columns; and (3) trim the cooling water requirement of the direct contact cooling system. As a result, the 'slip-stream'approach for reduced levels of capture leads to lower capital and operating costs.

Due to the range of CO_2 capture levels analyzed in Case 1, the Econamine capital and operating costs vary for the seven cases. While a factored approach that relies on the quantity of CO_2 captured for equipment sizing and cost estimation was employed, the cost estimates for the Econamine system were also developed based, in part, on output data from the ProTreat™ simulations. In particular, the ProTreat™ model output provided absorption and stripping column diameters for each case, which were used to determine the required number of absorption trains.

For this analysis, it was assumed that the maximum absorption column diameter is 20 meters (66 feet), based on information released by Fluor [4]. As a result, cases that include carbon capture up to 70% are based on a single absorption and compression train.

IGCC Plants

An Aspen model for a GEE IGCC power plant, coupled with analysis of different process configurations (i.e., water gas shift bypass ratio and Selexol™ CO_2 removal efficiency), was utilized to evaluate the technical and economic performance of pre-combustion CO_2 capture for the following four plant designs:

- Design 1 (D1) has no water gas shift (WGS) reactor. The minimum (0 percent) and maximum (25 percent) CO_2 capture levels for this particular configuration are modeled. The initial concept for D1 was to have a two-stage Selexol™ unit, and if no capture was desired, "turn off" the second stage (which would be dedicated for CO_2 control). However due to the high degree of integration between the H_2S and CO_2 absorbers, it is not feasible to simply disable the second stage. Consequently, D1A (0 percent capture) employs a one-stage Selexol™ unit for H_2S control, while D1B (25 percent capture) utilizes a two-stage Selexol™ unit to maximize CO_2 capture from the unshifted syngas.
- Design 2 (D2) has one-stage of WGS, with CO_2 capture ranging from 25 (upper limit from D1) to 75 percent (maximum achievable limit for this particular configuration). The different levels of CO_2 capture were achieved by varying the WGS bypass ratio and the two-stage Selexol™ CO_2 removal efficiency. The separation efficiency of a physical solvent-based system such as the Selexol™ process is directly proportional to the concentration of CO_2 in the syngas. Therefore, the level of CO_2 capture can be manipulated by varying the extent of the water gas shift reaction. In Design 2, the amount of CO being converted to CO_2 is varied by only shifting a portion of the syngas stream. The Selexol™ removal efficiency is changed by varying the solvent circulation rate, which changes the size and cost of the Selexol™ system.
- Design 3 (D3) has two-stages of WGS with CO_2 capture ranging from 25 percent (upper limit from D1) to the maximum achievable limit for this particular configuration (85 percent) by varying the WGS bypass ratio and the two-stage Selexol™ CO_2 removal efficiency. The Selexol™ removal efficiency is changed by varying the solvent circulation rate, which changes the size and cost of the Selexol™ system.
- Design 4 (D4) has two-stages of WGS with no bypass (therefore the entire syngas stream is shifted) with CO_2 capture ranging from 90 percent to 97 percent. To achieve greater than 90 percent CO_2 removal, the two-stage Selexol™ CO_2 removal efficiency is increased by raising the solvent circulation rate, which increases the size and cost of the Selexol™ system.

The Case 2 IGCC design descriptions are summarized in Exhibit ES-2.

Exhibit ES-2 Case 2 GEE IGCC Plant Configuration Summary

<table>
<tr><th>Case</th><th>CO_2 Capture</th><th>CO_2 Separation</th><th>Intended Storage</th><th>Gasifier</th><th>Steam psig/°F/°F</th><th>Oxidant</th><th>WGS</th><th>Sulfur Control</th></tr>
<tr><td>D1A</td><td>0%</td><td>N/A</td><td>N/A</td><td rowspan="14">GEE Radiant Only</td><td rowspan="14">1800/1050/ 1050</td><td rowspan="14">95 mol% O_2</td><td>N/A</td><td rowspan="14">Selexol ™</td></tr>
<tr><td>D1B</td><td>25%</td><td rowspan="13">Selexol™ 2nd Stage</td><td rowspan="13">Saline Formation</td><td>N/A</td></tr>
<tr><td>D2A</td><td>25%</td><td rowspan="4">One-Stage with Bypass</td></tr>
<tr><td>D2B</td><td>45%</td></tr>
<tr><td>D2C</td><td>60%</td></tr>
<tr><td>D2D</td><td>75%</td></tr>
<tr><td>D3A</td><td>25%</td><td rowspan="5">Two-Stage with Bypass</td></tr>
<tr><td>D3B</td><td>45%</td></tr>
<tr><td>D3C</td><td>60%</td></tr>
<tr><td>D3D</td><td>75%</td></tr>
<tr><td>D3E</td><td>85%</td></tr>
<tr><td>D4A</td><td>90%</td><td rowspan="3">Two-Stage without Bypass</td></tr>
<tr><td>D4B</td><td>95%</td></tr>
<tr><td>D4C</td><td>97%</td></tr>
</table>

To determine the process configurations for less than 90 percent CO_2 removal (IGCC D2 and D3), the WGS bypass ratio and Selexol™ CO_2 removal efficiency were varied over a series of Aspen simulations of the entire GEE IGCC power plant to evaluate the impact on WGS and Selexol™ costs and net plant efficiency. As a starting point, the Selexol™ CO_2 removal efficiency (92.4 percent) used to model 90 percent CO_2 removal was fixed [5], and the WGS bypass ratio was adjusted to achieve the desired level of capture. The CO_2 removal level was then held constant by decreasing both the WGS bypass ratio (i.e., routing more syngas through the WGS reactor(s)) and the Selexol™ CO_2 removal efficiency. These step changes in the WGS bypass ratio lead to an increase in CO_2 partial pressure, which relaxes the CO_2 removal required by the Selexol™ process.

As shown in Exhibit ES-3, the cost of the WGS system decreases as the WGS bypass ratio increases since the quantity of syngas being shifted declines. The Selexol™ system cost increases with the WGS bypass ratio since a higher solvent circulation rate is required to maintain 60 percent CO_2 removal as the CO_2 partial pressure decreases. However, the total cost of the WGS and Selexol™ systems, which is dominated by the cost of the Selexol™ system, gradually increases with the WGS bypass ratio. Meanwhile, the net plant HHV efficiency passes through a maximum value over the range of WGS bypass ratios. As a result, the WGS bypass ratios and Selexol™ CO_2 removal efficiencies used to model less than 90 percent CO_2 removal in this study (IGCC D2 and D3) correspond to the maximum net plant HHV efficiency.

Exhibit ES-3 Net Efficiency and Cost as a Function of WGS Bypass Ratio for 60% CO_2 Removal with IGCC Design 3

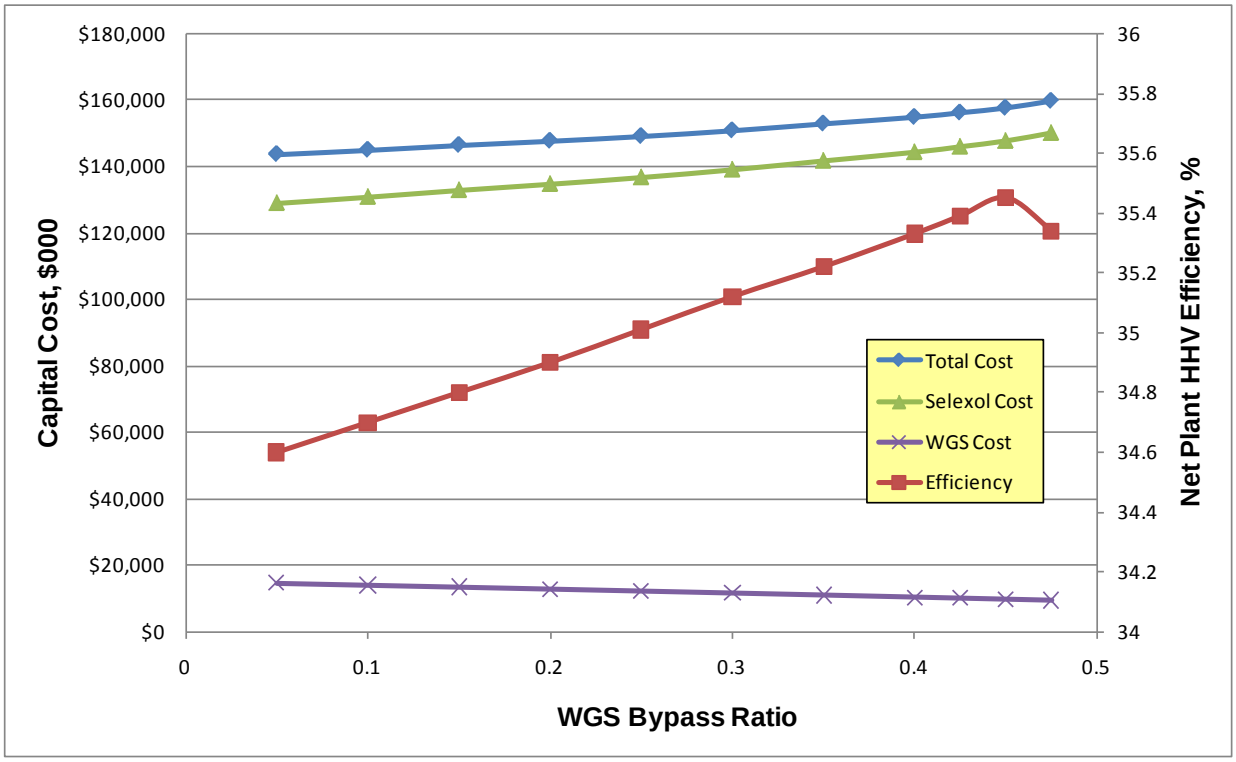

This procedure was repeated for each level of total CO_2 removal analyzed for IGCC D2 and D3 to determine the optimal WGS bypass ratio and Selexol™ CO_2 removal efficiency for these intermediate capture points. Data for these optimal configurations are provided in Exhibit ES-4 and Exhibit ES-5 for IGCC D2 and D3, respectively. These results indicate that the Selexol™ CO_2 removal efficiency increases with CO_2 partial pressure, which is the expected trend with a physical solvent-based system.

Exhibit ES-4 Process Configurations for IGCC D2

Total CO_2 Removal (%)	WGS	WGS Bypass Ratio (%)	Selexol™ CO_2 Removal (%)	P_{CO2} (psia)
25	One-Stage with Bypass	99.5	85.8	119.4
45		60	89	186.3
60		28.75	89.5	229.8
75		0	91	265.5

Exhibit ES-5 Process Configurations for IGCC D3

Total CO_2 Removal (%)	WGS	WGS Bypass Ratio (%)	Selexol™ CO_2 Removal (%)	P_{CO2} (psia)
25	Two-Stage with Bypass	99.75	86.31	119.7
45		69.4	90.04	186.5
60		45	90.1	230.1
75		21	90.4	264.3
85		5	90.52	289.3

A typical offering from a commercial catalyst vendor is a steam-to-dry gas (S:DG) molar ratio of 0.3 at the outlet of the final WGS reactor. However, for lower levels of CO_2 removal (IGCC D2 and D3), this study uses a S:DG molar ratio of 0.25 at the outlet of the final WGS reactor. Operating with a lower S:DG ratio impedes the kinetics of carbon monoxide (CO) to CO_2 conversion. Consequently, larger and more costly WGS reactors are required for a similar degree of conversion. Although a reduction in S:DG ratio requires a larger reactor volume (this analysis assumes a catalyst volume increase of 30 percent, and subsequently a 30 percent increase in reactor cost), there is the benefit of shift steam savings. This steam can then be expanded through the steam turbine to produce additional power.

Thermal input to the IGCC plant is used to fully-load the combustion turbines. Any remaining energy in the combustion turbine exhaust is extracted to the maximum extent possible in a heat recovery steam generator in order to raise steam to generate additional power. The net power for the IGCC cases ranges from 523 to 622 MW. The span in net output is caused by the wide range of CO_2 capture imposed from case-to-case. The differences in auxiliary loads are primarily attributed to CO_2 compression and the need for extraction steam in the WGS reactions, which reduces steam turbine output.

Results

The major results from the CO_2 capture sensitivity analysis are discussed below in the following order:

- Performance (efficiency)
- Economics (total overnight cost, cost of electricity, and CO_2 avoided cost)
- Performance and Cost summary

Performance

Energy Efficiency

The net plant HHV efficiencies for the SC PC and GEE IGCC cases are presented in Exhibit ES-6 and Exhibit ES-7, respectively. As the CO_2 capture requirement is increased for either plant type, PC or IGCC, there is an increase in the auxiliary power required to support the

capture equipment (either Econamine or Selexol™) and the CO_2 compressor trains. Further, more steam is consumed by the capture equipment, and by the WGS reactor(s) in the IGCC case, making less available for supply to the steam turbine. Both effects (higher auxiliary load and reduced steam supply to the turbine) detract from the net power produced by the plant per unit of coal energy input, as evidenced by the net plant HHV efficiency trends versus CO_2 capture level.

Exhibit ES-6 Supercritical PC Net Plant Efficiency (HHV)

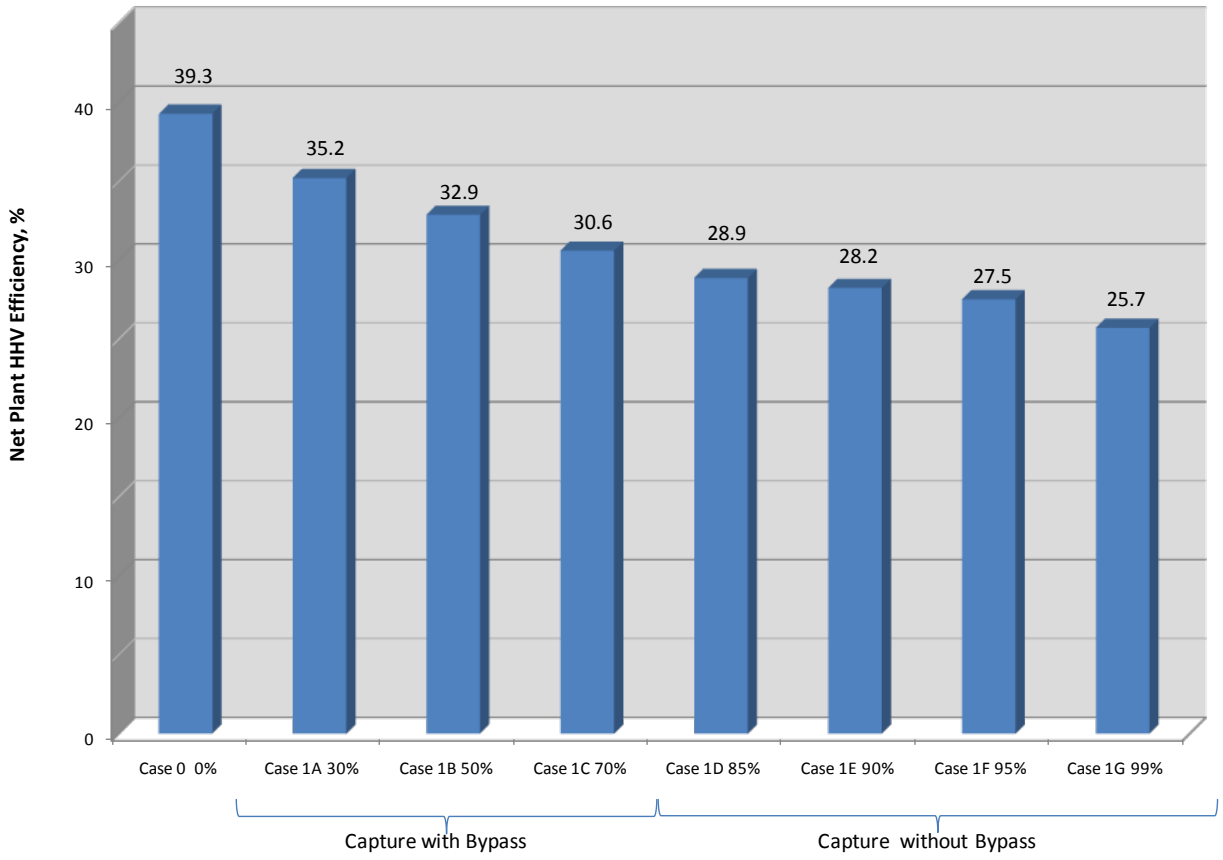

Exhibit ES-7 IGCC Net Plant Efficiency (HHV)

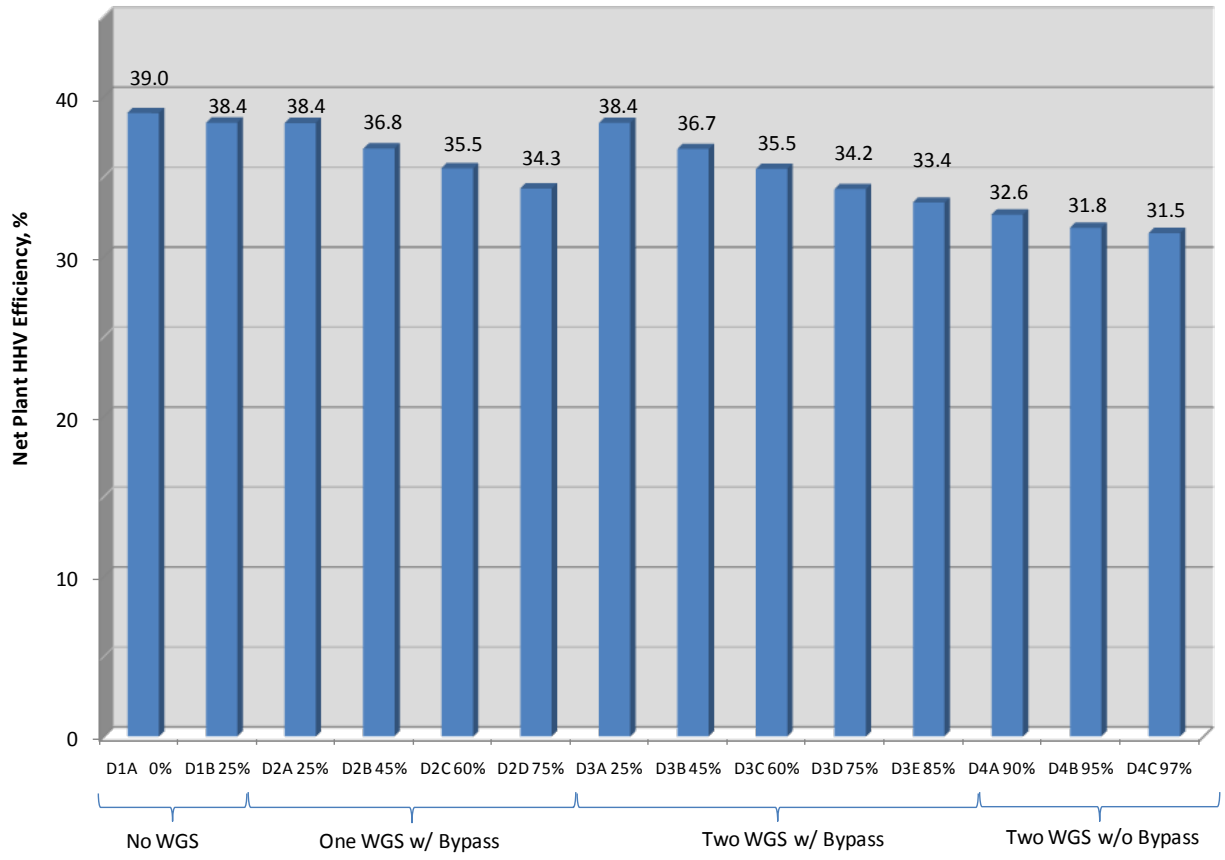

Economics

Total Overnight Cost

All capital costs are presented as "overnight costs" expressed in June 2007 dollars. The capital costs are presented at the total overnight cost (TOC) level, which includes: (1) equipment (complete with initial chemical and catalyst loadings); (2) materials; (3) labor (direct and indirect); (4) engineering and construction management; (5) contingencies (process and project); and (6) owner's costs. The owner's costs, which are summarized in Exhibit 2-18, include preproduction costs, inventory capital, land costs, financing costs, taxes and insurances, and other owner's costs.

The TOC for the SC PC and GEE IGCC cases are presented in Exhibit ES-8 and Exhibit ES-9, respectively. These exhibits categorize the TOC into five categories: (1) bare erected cost; (2) engineering, home office, construction management (CM), and fees; (3) project contingency; (4) process contingency; and (5) owner's costs.

The SC PC total overnight cost estimates apply to facilities designed with a fixed 550 MW net capacity. As the design is equipped for increased CO_2 capture, moving from Case 1A through Case 1G, the TOC also increases as a result of the need for larger power plant components for

power generation to offset the auxiliary power and steam requirements of the CO_2 capture and compression systems. Hence, the increase in installed TOC per net kW delivered.

Exhibit ES-8 Supercritical PC Total Overnight Cost

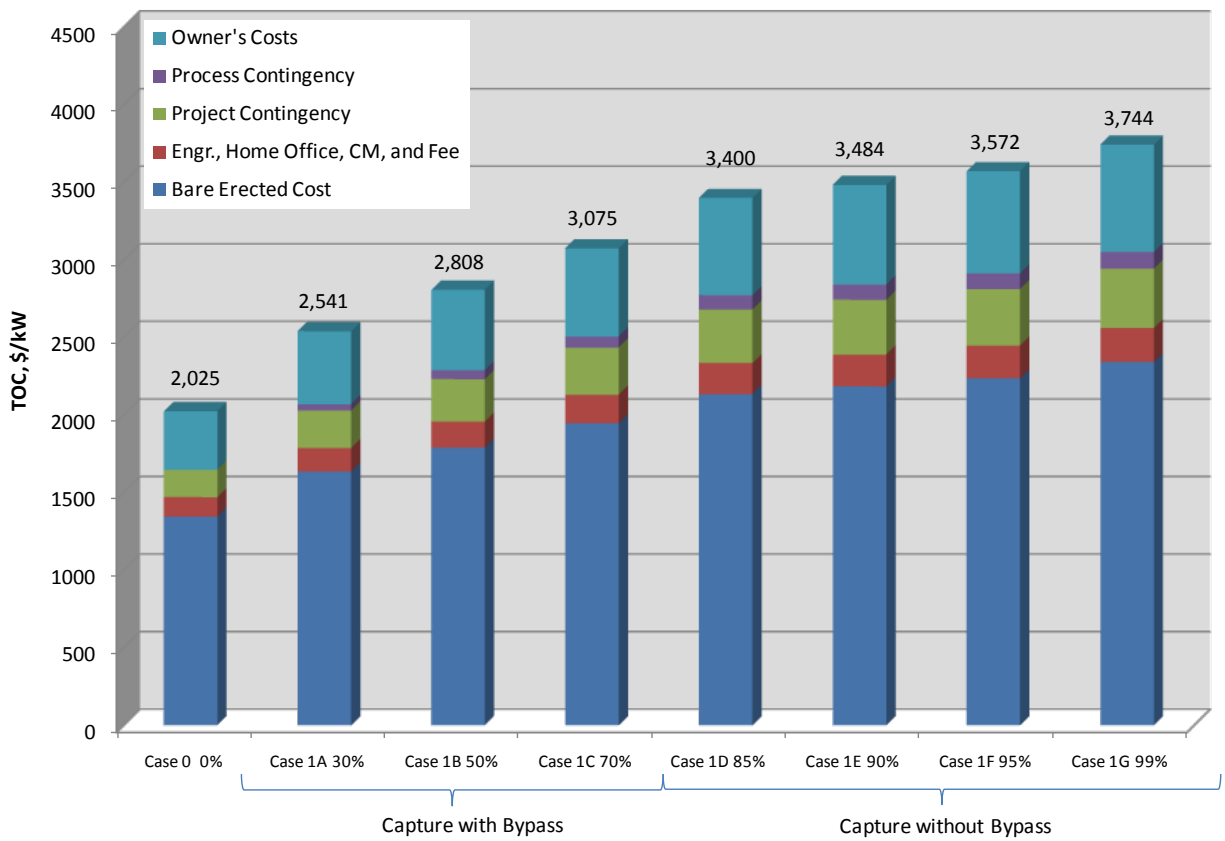

The IGCC total overnight cost estimates apply to facilities designed with a fixed gross combustion turbine capacity of 464 MW (total for two turbines). As the plant is equipped for increased CO_2 capture, moving from Case 2 D1A through Case 2 D4C, the TOC also increases as a result of the need for larger components for power generation, while still maintaining the required gas turbine output. Hence, the increase in installed TOC per net kW delivered.

Exhibit ES-9 IGCC Total Overnight Cost

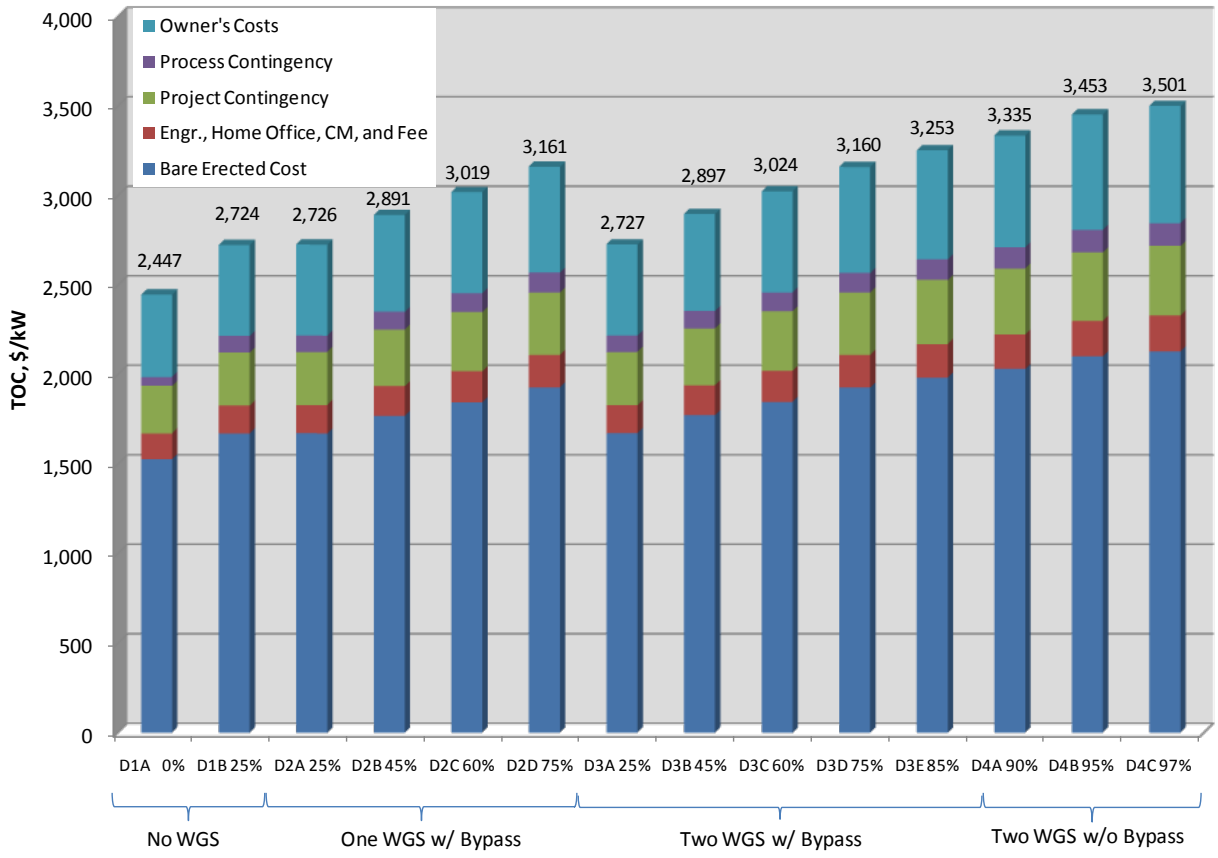

Cost of Electricity

The revenue requirement figure-of-merit in this report is the cost of electricity (COE) expressed in mills/kWh (numerically equivalent to $/MWh). The capital expenditure and operational periods for the SC PC and IGCC power plants are 5 and 30 years, respectively. The costs associated with CO_2 transportation, storage, and monitoring (TS&M) are included for all capture cases. All costs are expressed in June 2007 dollars, and the resulting COE is also expressed in June 2007 year dollars.

The COE for the SC PC and GEE IGCC cases are presented in Exhibit ES-10 and Exhibit ES-11, respectively. These exhibits show the COE divided into five categories: (1) capital costs; (2) fixed costs; (3) variable costs; (4) fuel costs; and (5) CO_2 TS&M costs.

The COE estimates are based on capacity factors of 85 percent and 80 percent for the SC PC and GEE IGCC cases, respectively.

Exhibit ES-10 Supercritical PC Cost of Electricity

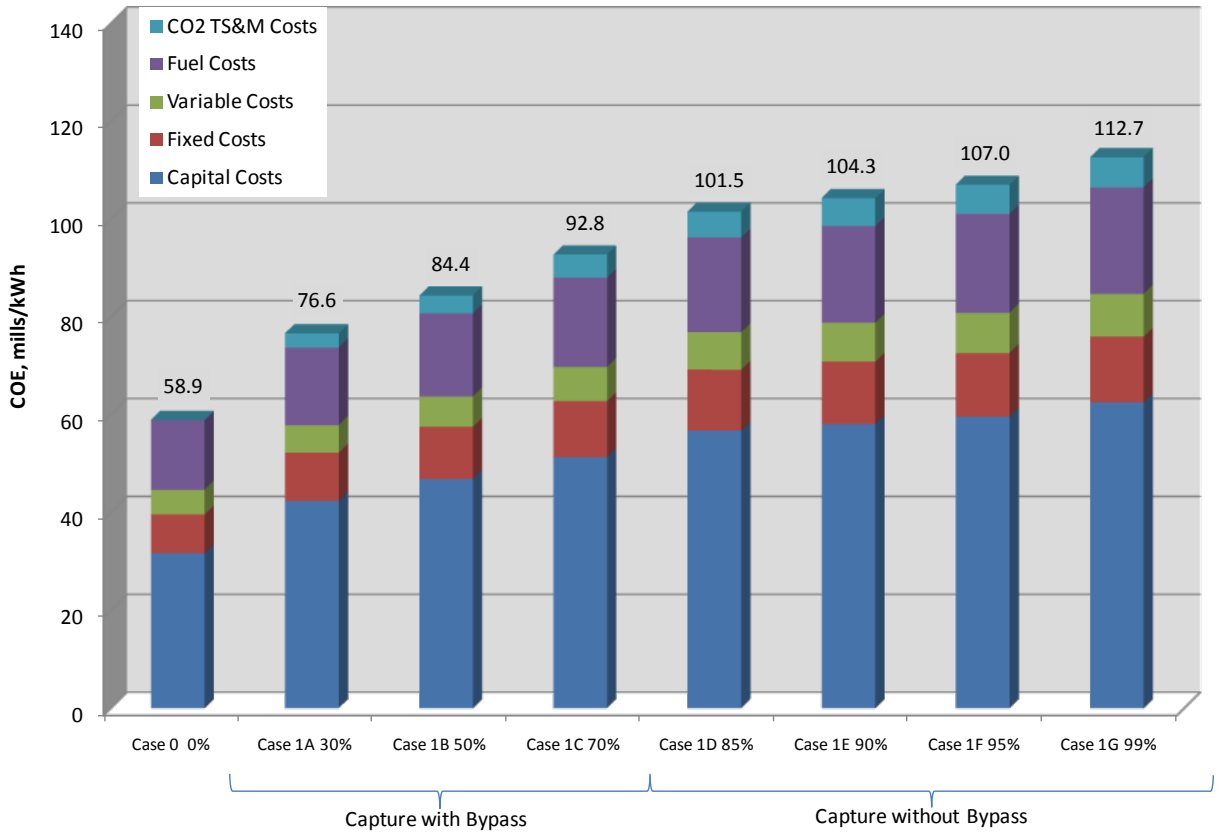

Exhibit ES-11 IGCC Cost of Electricity

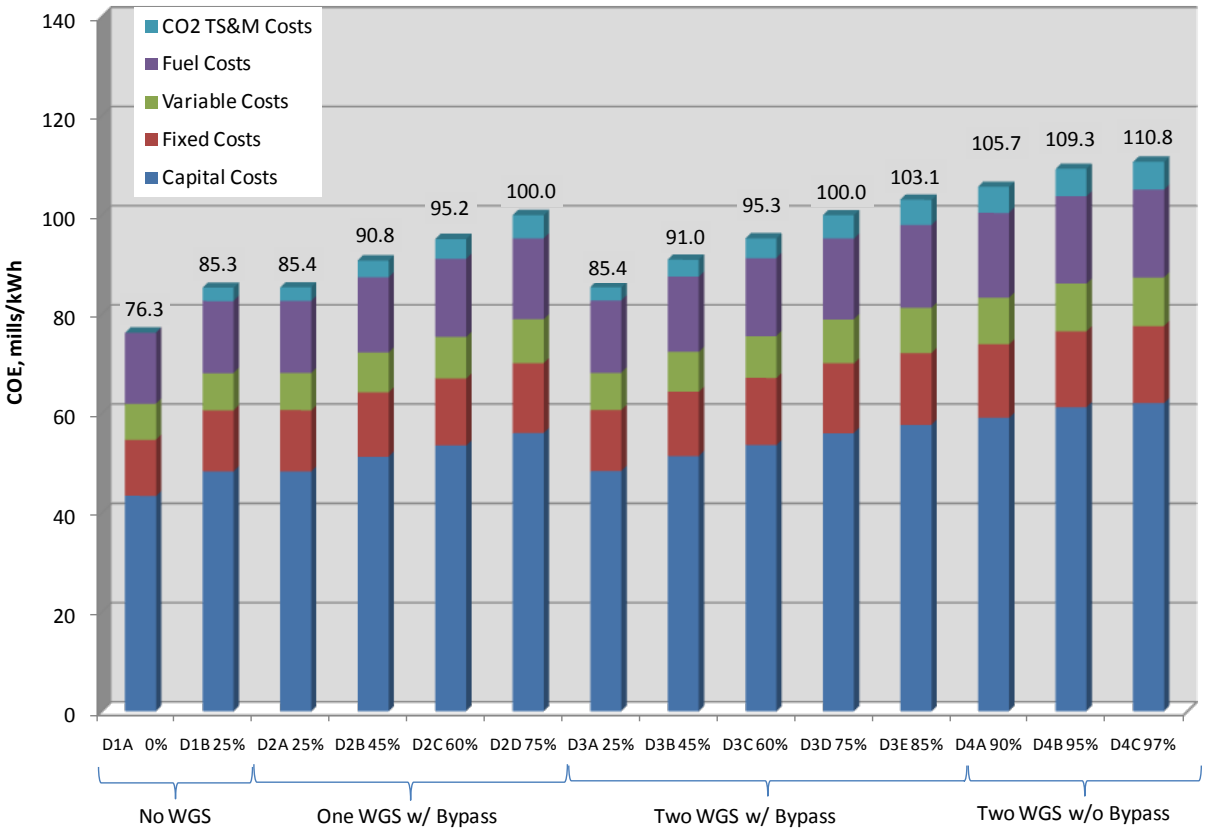

CO_2 Avoided Costs

The CO_2 avoided cost was calculated as illustrated in Equation 1.

$$(1) \qquad Avoided\ \ Cost = \frac{\{COE_{with\ removal} - COE_{reference}\}\ \$/MWh}{\{CO_2 Emissions_{reference} - CO_2 Emissions_{with\ removal}\}\ tonnes/MWh}$$

The CO_2 avoided costs for the SC PC and GEE IGCC cases are presented in Exhibit ES-12 and Exhibit ES-13, respectively. The SC PC cases use the corresponding non-capture SC PC reference. The IGCC cases are presented both relative to the equivalent IGCC without carbon capture and SC PC without capture plants. For the SC PC plant, the CO_2 avoided costs decrease as the CO_2 capture level increases until reaching minimum values at 95 percent capture (Case 1F).

Exhibit ES-12 Supercritical PC CO_2 Avoided Costs

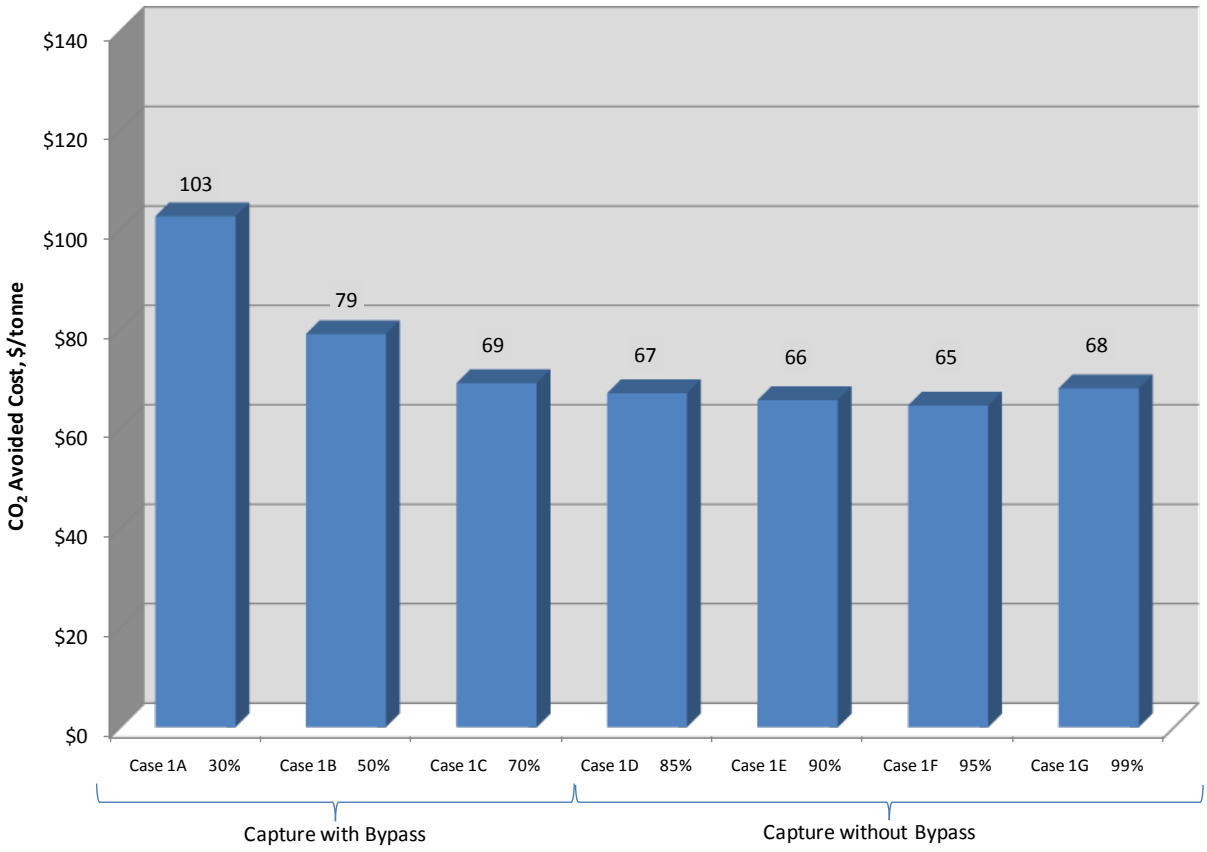

The CO_2 avoided costs for the GEE IGCC cases decrease as the CO_2 capture level increases, until reaching minimum values at 85 to 90 percent capture (Cases D3E and D4A). As a result, this analysis concludes that 85 to 90 percent is the optimal CO_2 capture level for a GEE IGCC power plant.

Exhibit ES-13 IGCC CO_2 Avoided Costs

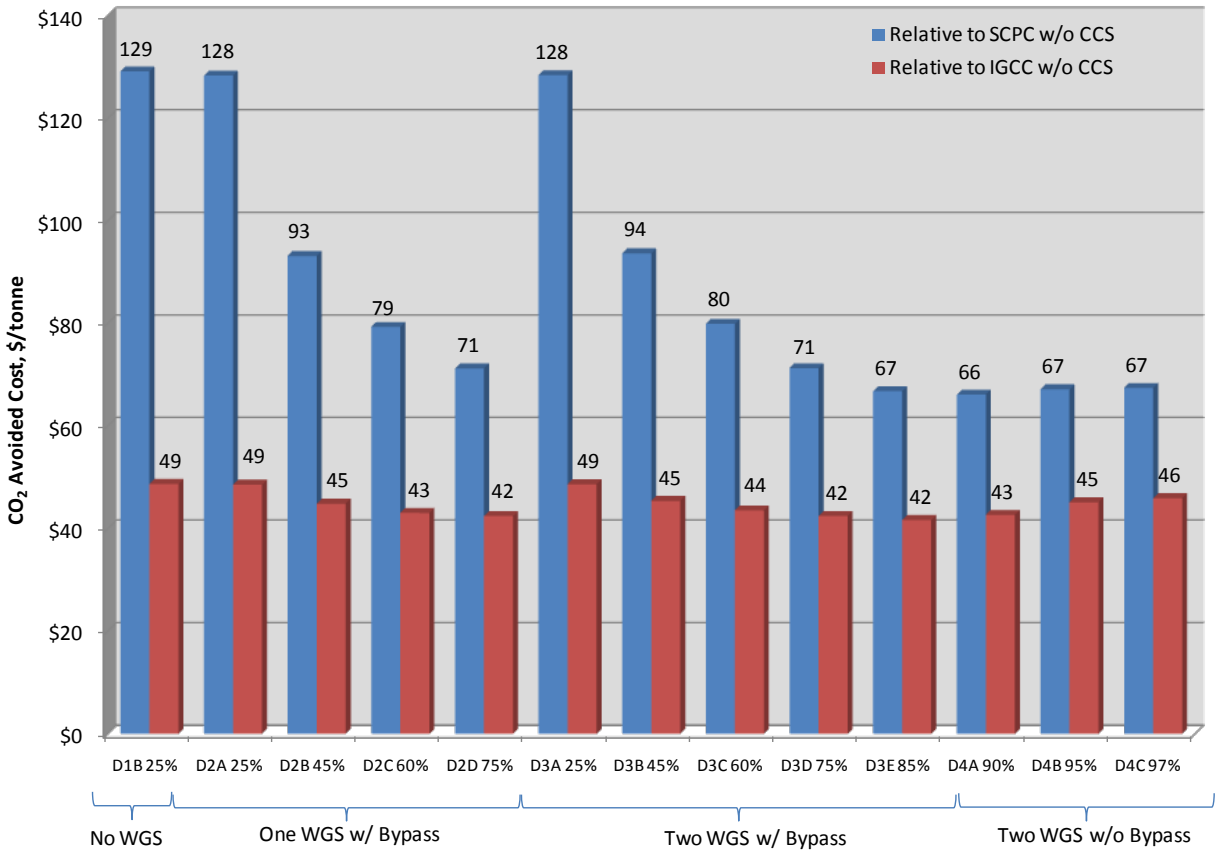

Cost and Performance Summary

The following conclusions can be drawn from this analysis.

- At all levels of carbon capture considered in this analysis, an IGCC plant will operate more efficiently than a SC PC plant. This higher efficiency results in lower fuel costs and reduced coal handling costs for the same level of power output.

- At lower levels of CO_2 capture, the COE of a SC PC plant is less than an IGCC plant. However this COE advantage begins to disappear as capture level increases. For CCS greater than approximately 90 percent, IGCC and SC PC have costs of electricity that are nearly equal. This same trend applies to plant capital costs (expressed in $/kW).

- CO_2 avoided costs, using analogous non-capture plants as reference, are substantially lower for IGCC than for SC PC, for all levels of capture. This is reflective of the relatively lower cost impact associated with adding CO_2 controls to an IGCC plant compared to SC PC. However, the avoided CO_2 costs for IGCC capture plants, using the SC PC non-capture reference plant, are higher due to the higher COE of non-capture IGCC plants.

- CO_2 avoided costs for SC PC plants are high for low levels of CCS, and then start to diminish as the capture increases. Gradually, a minimum is reached around 95% CCS, before costs start to rise again slightly. This suggests that if a SC PC plant will lay out the additional capital required to install CO_2 controls, that equipment could be used most cost-effectively by capturing as much carbon dioxide as possible (up to about 95%).

- CO_2 avoided costs for IGCC (relative to an IGCC non-capture plant) are less volatile than SC PC over a wide range of capture. Although they generally decrease as the level of CCS increases (similar to SC PC), the spread between the high and low values is small relative to SC PC. Since an IGCC system is a more complex process, it better lends itself to optimization than a SC PC plant. To accommodate the specified level of CO_2 capture, there were numerous variables that were manipulated simultaneously (including the number of water gas shift reactors, the amount of shift steam required, solvent circulation rate, and the syngas bypass rate) to minimize the cost and performance impact. The SC PC plant, although in most cases less expensive than IGCC, is a simpler process and therefore exhibits less potential for optimization.

A summary of SC PC and IGCC plant costs and performance are shown in Exhibit ES-14 and Exhibit ES-15, respectively.

Exhibit ES-14 Cost and Performance Results for the Supercritical PC Cases

Case	0	1A	1B	1C	1D	1E	1F	1G
CO_2 Capture, %	0%	30%	50%	70%	85%	90%	95%	99%
Gross Power Output, MW_e	580.4	601.5	618.2	637.8	654.8	661.3	667.9	679.6
Net Power Output, MW_e	550.0	550.0	550.0	550.0	550.1	550.0	550.0	550.0
Net Plant Efficiency, % (HHV)	39.3	35.2	32.9	30.6	28.9	28.2	27.5	25.7
Net Plant Heat Rate, Btu/kWh (HHV)	8,687	9,695	10,379	11,151	11,819	12,083	12,400	13,269
Coal Flowrate (lb/hr)	409,550	457,066	489,316	525,764	557,283	569,672	584,578	625,561
Total CO_2 Captured, lb/MWh_{net}	NA	588	1,057	1,582	2,037	2,213	2,398	2,674
CO_2 Capture & Compression Cost, $x1000	NA	$190,138	$266,902	$336,794	$441,781	$463,389	$485,273	$516,797
Total Plant Cost, $x1000	$905,901	$1,138,688	$1,258,942	$1,378,696	$1,525,453	$1,562,889	$1,602,389	$1,678,914
Owner's Costs, $x1000	$207,800	$258,649	$285,448	$312,458	$344,744	$353,249	$362,267	$380,090
Total Overnight Cost, $x1000	$1,113,701	$1,397,338	$1,544,390	$1,691,155	$1,870,197	$1,916,138	$1,964,657	$2,059,004
Total Overnight Cost, $/kW	$2,025	$2,541	$2,808	$3,075	$3,400	$3,484	$3,572	$3,744
Total As-Spent Capital, $x1000	$1,262,937	$1,592,965	$1,760,604	$1,927,917	$2,132,024	$2,184,397	$2,239,708	$2,347,264
Total As-Spent Capital, $/kW	$2,296	$2,896	$3,201	$3,505	$3,876	$3,972	$4,072	$4,268
CO_2 Capital Cost Penalty[a], $/kW	NA	$516	$783	$1,050	$1,375	$1,459	$1,548	$1,719
Cost of Electricity[b], mills/kWh	58.90	76.64	84.38	92.75	101.49	104.29	107.00	112.65
COE CO_2 Penalty[a], mills/kWh	NA	17.7	25.5	33.8	42.6	45.4	48.1	53.8
Percent increase in COE[a], %	NA	30.1	43.3	57.5	72.3	77.1	81.7	91.3
Cost of CO_2 Avoided[a], $/tonne	NA	102.8	79.1	69.2	67.2	65.9	64.7	68.2
CO_2 Emissions, lb/MMBtu	203.2	142.9	101.7	61.7	31.2	20.4	10.2	2.0
CO_2 Emissions, lb/MWh_{net}	1,765	1,385	1,055	687	369	246	126	27
SO_2 Emissions, lb/MMBtu	0.086	0.064	0.050	0.036	0.017	0.017	0.016	0.016
SO_2 Emissions, lb/MWh	0.75	0.570	0.460	0.340	0.170	0.170	0.170	0.170
NO_x Emissions, lb/MMBtu	0.070	0.070	0.070	0.070	0.070	0.070	0.070	0.070
NO_x Emissions, lb/MWh	0.608	0.621	0.646	0.673	0.695	0.703	0.715	0.752
PM Emissions, lb/MMBtu	0.013	0.013	0.013	0.013	0.013	0.013	0.013	0.013
PM Emissions, lb/MWh	0.113	0.115	0.120	0.125	0.129	0.131	0.133	0.140
Hg Emissions, lb/TBtu	1.14	1.14	1.14	1.14	1.14	1.14	1.14	1.14
Hg Emissions, lb/TWh	9.93	10.1	10.6	11.0	11.3	11.5	11.7	12.3
Raw Water Withdrawal, gpm	5,394	6,245	6,987	8,386	9,615	10,095	10,512	11,664
Raw Water Consumption, gpm	4,301	4,898	5,433	6,474	7,392	7,753	8,074	8,961
Raw Water Consumption, gal/MWh_{net}	469	534	593	706	806	846	881	978

[a] Relative to Case 0 (SC PC without capture from *2010 Bituminous Baseline* study)

[b] Capacity factor is 85% for the SC PC cases

Exhibit ES-15 Cost and Performance Results for the GEE IGCC Cases

Case	2-D1A	2-D1B	2-D2A	2-D2B	2-D2C	2-D2D	2-D3A	2-D3B	2-D3C	2-D3D	2-D3E	2-D4A	2-D4B	2-D4C
CO_2 Capture, %	0%	25%	25%	45%	60%	75%	25%	45%	60%	75%	85%	90%	95%	97%
Gross Power Output, MW_e	747.8	750.4	750.4	746.9	745.2	742.0	750.4	746.2	744.2	741.6	739.8	734.0	726.6	723.6
Net Power Output, MW_e	622.0	607.2	607.0	590.8	578.4	563.9	607.0	590.0	577.4	563.8	554.5	543.2	528.5	522.9
Net Plant Efficiency, % (HHV)	39.0	38.4	38.4	36.8	35.5	34.3	38.4	36.7	35.5	34.2	33.4	32.6	31.8	31.5
Net Plant Heat Rate, Btu/kWh (HHV)	8,756	8,891	8,895	9,283	9,604	9,958	8,894	9,289	9,614	9,969	10,222	10,459	10,731	10,840
Coal Flowrate (lb/hr)	466,861	462,752	462,861	470,117	476,133	481,355	462,783	469,844	475,867	481,779	485,836	487,026	486,169	485,856
Total CO_2 Captured, lb/MWh_{net}	NA	425	430	809	1,127	1,476	429	810	1,125	1,467	1,710	1,899	2,159	2,269
CO_2 Capture & Compression Cost, $x1000	0	$166,439	$166,741	$193,350	$212,092	$231,604	$167,196	$194,185	$212,378	$230,775	$242,919	$251,958	$264,505	$228,358
Total Plant Cost, $x1000	$1,235,944	$1,345,298	$1,346,066	$1,389,128	$1,419,771	$1,449,191	$1,346,380	$1,390,235	$1,419,640	$1,447,904	$1,465,871	$1,472,866	$1,483,871	$1,488,149
Owner's Costs, $x1000	$286,161	$308,679	$308,860	$319,113	$326,535	$333,624	$308,914	$319,358	$326,551	$333,508	$337,972	$338,851	$341,323	$342,287
Total Overnight Cost, $x1000	$1,522,105	$1,653,977	$1,654,925	$1,708,241	$1,746,306	$1,782,815	$1,655,294	$1,709,592	$1,746,192	$1,781,411	$1,803,843	$1,811,717	$1,825,194	$1,830,436
Total Overnight Cost, $/kW	$2,447	$2,724	$2,726	$2,891	$3,019	$3,161	$2,727	$2,897	$3,024	$3,160	$3,253	$3,335	$3,453	$3,501
Total As-Spent Capital, $x1000	$1,735,200	$1,885,534	$1,886,615	$1,947,394	$1,990,789	$2,032,409	$1,887,035	$1,948,935	$1,990,658	$2,030,809	$2,056,381	$2,065,358	$2,080,721	$2,086,697
Total As-Spent Capital, $/kW	$2,790	$3,105	$3,108	$3,296	$3,442	$3,604	$3,109	$3,303	$3,447	$3,602	$3,709	$3,802	$3,937	$3,991
CO_2 Capital Cost Penalty[a], $/kW	$0	$277	$279	$444	$572	$715	$280	$450	$577	$713	$806	$888	$1,007	$1,054
Cost of Electricity[b], mills/kWh	76.3	85.3	85.4	90.8	95.2	100.0	85.4	91.0	95.3	100.0	103.1	105.7	109.3	110.8
COE CO_2 Penalty[a], mills/kWh	NA	9.0	9.1	14.5	18.9	23.7	9.1	14.7	19.0	23.7	26.8	29.4	33.0	34.4
Percent increase in COE[a], %	NA	11.8%	11.9%	19.0%	24.7%	31.0%	12.0%	19.2%	24.9%	31.0%	35.1%	38.5%	43.3%	45.1%
Cost of CO_2 Avoided[a], $/tonne	NA	48.7	48.6	44.9	43.1	42.5	48.7	45.4	43.6	42.5	41.7	42.7	45.2	46.0
CO_2 Emissions, lb/MMBtu	196.8	147.8	147.3	108.8	78.9	49.7	147.3	108.8	79.2	49.7	30.1	19.7	10.4	6.5
CO_2 Emissions, lb/MWh_{net}	1,723	1,314	1,310	1,010	758	495	1,310	1,011	762	496	308	206	112	71
SO_2 Emissions, lb/MMBtu	0.005	0.002	0.002	0.002	0.002	0.002	0.002	0.002	0.002	0.002	0.002	0.002	0.002	0.002
SO_2 Emissions, lb/MWh	0.040	0.020	0.020	0.020	0.020	0.020	0.020	0.020	0.020	0.020	0.020	0.020	0.020	0.020
NO_x Emissions, lb/MMBtu	0.059	0.055	0.055	0.053	0.051	0.050	0.055	0.053	0.052	0.050	0.049	0.049	0.049	0.049
NO_x Emissions, lb/MWh	0.430	0.397	0.397	0.390	0.384	0.379	0.397	0.391	0.385	0.379	0.375	0.376	0.380	0.382
PM Emissions, lb/MMBtu	0.0071	0.0071	0.0071	0.0071	0.0071	0.0071	0.0071	0.0071	0.0071	0.0071	0.0071	0.0071	0.0071	0.0071
PM Emissions, lb/MWh	0.052	0.051	0.051	0.052	0.053	0.054	0.051	0.052	0.053	0.054	0.054	0.055	0.055	0.056
Hg Emissions, lb/TBtu	0.571	0.571	0.571	0.571	0.571	0.571	0.571	0.571	0.571	0.571	0.571	0.571	0.571	0.571
Hg Emissions, lb/TWh	4.16	4.11	4.11	4.20	4.26	4.32	4.11	4.20	4.26	4.33	4.38	4.42	4.46	4.48
Raw Water Withdrawal, gpm	4,734	4,692	4,697	5,038	5,300	5,530	4,695	5,040	5,307	5,569	5,748	5,817	5,739	5,707
Raw Water Consumption, gpm	3,755	3,722	3,727	4,033	4,270	4,481	3,725	4,034	4,276	4,514	4,677	4,741	4,679	4,654
Raw Water Consumption, gal/MWh_{net}	362	368	368	410	443	477	368	410	444	480	506	524	531	534

[a] Relative to Case 2 D1A (0% CO_2 capture)

[b] Capacity factor is 80% for the GEE IGCC cases

This page intentionally left blank

1. Introduction

1.1 Study Background

Coal-fired power plants account for approximately 50 percent of the power generation in the United States and approximately 80 percent of the greenhouse gas (GHG) emissions produced by the power generation sector [6]. Because coal-fired power generation is such a large contributor to both national energy security and overall GHG emissions, it is important to develop methods for reducing the carbon footprint of coal-fired power plants to mitigate environmental concerns while continuing to reliably satisfy power demand. The effects of GHG reduction in the power industry could even be felt in the transportation industry if plug-in hybrid electric vehicles, fueled by low-GHG power, play a larger role in the overall transportation fleet.

Levels of CO_2 in the atmosphere have shown a steady rise from approximately 300 ppm in 1940 to more than 390 ppm in 2010 [7]. At the same time, various studies have documented noticeable changes in the earth's climate during recent years, and model predictions suggest that CO_2 levels play a role in these climate changes [8]. Given the potential implications surrounding global climate change and increasing concentrations of CO_2 in the atmosphere, technology and policy options are being investigated for avoiding CO_2 emissions.

The U.S. Department of Energy (DOE) seeks to develop technology capable of capturing and sequestering 90 percent of the CO_2 produced in pulverized coal (PC) and integrated gasification combined cycle (IGCC) power plants that can achieve a significantly lower cost of electricity relative to the conventional technology components portrayed in this analysis.

1.2 Project Objectives

The study objective was to identify the optimal CO_2 capture level at new SC PC and IGCC power plants by employing state-of-the-art control technologies in multiple process configurations.

The objective of Case 1 is to evaluate the technical and economic performance of a new SC PC power plant equipped with Econamine FG Plus^{SM} for post-combustion CO_2 capture in the following increments: 30, 50, 70, 85, 90, 95, and 99 percent capture. More detailed, predictive acid gas removal (AGR) modeling is utilized to more accurately represent the performance of the CO_2 separation process, and to determine if an optimum level of control exists. This case also includes verification (via literature search) that less than 90 percent CO_2 capture is most economical using a 'slip-stream' approach.

The Case 2 objective is to evaluate the technical and economic performance of four designs for a new General Electric Energy (GEE) IGCC power plant with pre-combustion CO_2 capture using a physical solvent-based Selexol™ system:

- Design 1 (D1) has no water gas shift (WGS) reactor. The minimum (0 percent) and maximum (25 percent) CO_2 capture levels for this particular configuration are

modeled. Due to the high level of integration between the H_2S and CO_2 absorbers, it was not feasible to model no CO_2 capture with a two-stage Selexol™ system. Consequently, D1A (0 percent capture) employs a one-stage Selexol™ unit for hydrogen sulfide (H_2S) control, while D1B (25 percent capture) utilizes a two-stage Selexol™ unit to maximize CO_2 capture from the unshifted syngas. D1 includes a carbonyl sulfide (COS) hydrolysis unit to treat the entire syngas stream.

- Design 2 (D2) has one-stage WGS with CO_2 capture ranging from 25 percent (upper limit from D1) to the maximum achievable limit for this particular configuration (75 percent) by varying the WGS bypass ratio and the two-stage Selexol™ CO_2 removal efficiency. The Selexol™ removal efficiency is changed by varying the solvent circulation rate, which changes the size and cost of the Selexol™ system. The combined syngas stream (shifted and unshifted gas) is routed through a COS hydrolysis unit.
- Design 3 (D3) has two-stage WGS with CO_2 capture ranging from 25 percent (upper limit from D1) to the maximum achievable limit for this particular configuration (85 percent) by varying the WGS bypass ratio and the two-stage Selexol™ CO_2 removal efficiency. The Selexol™ removal efficiency is changed by varying the solvent circulation rate, which changes the size and cost of the Selexol™ system. The WGS bypass stream passes through a COS hydrolysis unit.
- Design 4 (D4) has two-stage WGS and no bypass with CO_2 capture ranging from 90 to 97 percent. To achieve greater than 90 percent CO_2 removal, the two-stage Selexol™ CO_2 removal efficiency is increased by raising the solvent circulation rate, which increases the size and cost of the Selexol™ system. D4 does not include a COS hydrolysis unit since sufficient COS to H_2S conversion occurs across the two WGS reactors.

The facilities will be located in the Illinois coal basin using high-sulfur bituminous Illinois No. 6 coal as the feedstock to produce electric power. The study includes compression of the captured CO_2 to pipeline pressure (2,215 psia), pipeline transport 80 kilometers (50 miles), storage in a saline formation at a depth of 1,239 meters (4,055 ft), and monitoring for 80 years. The site will have appropriate access to rail transportation for delivery of coal. All local coal handling facilities will be included in the design and cost estimation portion of this study.

2. General Evaluation Basis

For Case 1, an Aspen model for a SC PC power plant, coupled with detailed simulations of the Econamine FG Plus^{SM} process using Optimized Gas Treating's ProTreat™, was utilized to evaluate the technical and economic performance of post-combustion CO_2 capture in the following increments: 30, 50, 70, 85, 90, 95, and 99 percent capture. The Case 1 SC PC descriptions are summarized in Exhibit 2-1.

Exhibit 2-1 Case 1 Supercritical PC Plant Configuration Summary

Case	CO_2 Capture	Intended Storage	Boiler	Steam psig/°F/°F	Oxidant	NO_x Control	Sulfur Control
1A	30%	Saline Formation	Wall-fired, PC	3500/1100/1100	Air	LNB/OFA/SCR 0.07 lb/MMBtu	Wet FGD 0.1 lb/MMBtu
1B	50%						
1C	70%						
1D	85%						
1E	90%						
1F	95%						
1G	99%						

Optimized Gas Treating's rate-based ProTreat™ software was used to generate performance estimates for the Econamine FG Plus^{SM} process. Initially, 90 percent CO_2 removal was modeled by adjusting three key process parameters: (1) the circulation rate for the 30 wt% monoethanolamine (MEA) solution; (2) the reboiler steam flow rate; and (3) the height of packing material in the absorption and stripping columns. For greater than 90 percent CO_2 removal, the MEA and reboiler steam flow rates were increased, while the packing height in the absorption and stripping columns was also raised to model 99 percent CO_2 removal.

A literature search was conducted to verify that <90 percent CO_2 capture is most economical using a "slip-stream" (or bypass) approach. Indeed, the slip-stream approach is more cost-effective for <90 percent CO_2 capture than removing reduced CO_2 fractions from the entire flue gas stream, according to multiple peer-reviewed studies [1, 2, 3]. The cost of CO_2 capture with the Econamine process is dependent on the volume of gas being treated and a reduction in flue gas flow rate will (1) decrease the quantity of energy consumed by flue gas blowers; (2) reduce the size of the CO_2 absorption columns; (3) trim the cooling water requirement of the direct contact cooling system; and (4) decrease the amount of fan power required to increase flue gas temperature and plume buoyancy. As a result, the 'slip-stream' approach for <90 percent CO_2 capture leads to lower capital and operating costs. Consequently, less than 90 percent CO_2 removal was modeled by bypassing a portion of the flue gas around the Econamine system. Thus, for these cases the inlet flue gas flow rate was adjusted in ProTreat™, along with the MEA and reboiler steam flow rates, to simulate CO_2 removals ranging from 30 percent to 85 percent.

For each case, the CO_2 removal efficiency and reboiler steam duty obtained from ProTreat™ were incorporated into the complete SC PC power plant Aspen model to determine the coal feed rate required to maintain a net electric generation capacity of 550 MWe. This approach allows for an equitable comparison of the seven CO_2 capture cases.

Due to the range of CO_2 capture levels analyzed in Case 1, the Econamine capital and operating costs vary for the seven cases. While a factored approach that relies on the quantity of CO_2 captured for equipment sizing and cost estimation was employed, the cost estimates for the Econamine system were also developed based, in part, on output data from the ProTreat™ simulations. In particular, the ProTreat™ model output provided absorption and stripping column diameters for each case, which were used to determine the required number of absorption trains.

For this analysis, it was assumed that the maximum absorption column diameter is 20 meters, based on information released by Fluor [4]. As a result, cost estimates for three CO_2 capture levels – 30 percent (1A), 50 percent (1B), and 70 percent (1C) – are based on a single absorption and compression train. To calculate the capital cost for a single absorption train, it was assumed that the absorption columns represent 40 percent of the total capital cost for a two-train Econamine system.

For Case 2, an Aspen model for a GEE IGCC power plant, coupled with analysis of different process configurations (i.e., water gas shift bypass ratio and Selexol™ CO_2 removal efficiency), was utilized to evaluate the technical and economic performance of pre-combustion CO_2 capture for the four plant designs:

- D1 has no WGS reactor. The minimum (0 percent) and maximum (25 percent) CO_2 capture levels for this particular configuration are modeled. Due to the high level of integration between the H_2S and CO_2 absorbers, it is not feasible to model no CO_2 capture with a two-stage Selexol™ system. Consequently, D1A (0 percent capture) employs a one-stage Selexol™ unit for H_2S control, while D1B (25 percent capture) utilizes a two-stage Selexol™ unit to maximize CO_2 capture from the unshifted syngas. D1 includes a COS hydrolysis unit to treat the entire syngas stream.
- D2 has one-stage WGS with CO_2 capture ranging from 25 percent (upper limit from D1) to the maximum achievable limit for this particular configuration (75 percent) by varying the WGS bypass ratio and the two-stage Selexol™ CO_2 removal efficiency. The Selexol™ removal efficiency is changed by varying the solvent circulation rate, which changes the size and cost of the Selexol™ system. The combined syngas stream (shifted and unshifted gas) is routed through a COS hydrolysis unit.
- D3 has two-stage WGS with CO_2 capture ranging from 25 percent (upper limit from D1) to the maximum achievable limit for this particular configuration (85 percent) by varying the WGS bypass ratio and the two-stage Selexol™ CO_2 removal efficiency. The Selexol™ removal efficiency is changed by varying the solvent circulation rate, which changes the size and cost of the Selexol™ system. The WGS bypass stream passes through a COS hydrolysis unit.
- D4 has two-stage WGS and no bypass with CO_2 capture ranging from 90 to 97 percent. To achieve greater than 90 percent CO_2 removal, the two-stage Selexol™

CO_2 removal efficiency is increased by raising the solvent circulation rate, which increases the size and cost of the Selexol™ system. D4 does not include a COS hydrolysis unit since sufficient COS to H_2S conversion occurs across the two WGS reactors.

The Case 2 IGCC design descriptions are summarized in Exhibit 2-2.

Exhibit 2-2 Case 2 GEE IGCC Plant Configuration Summary

<table>
<tr><th>Case</th><th>CO_2 Capture</th><th>CO_2 Separation</th><th>Intended Storage</th><th>Gasifier</th><th>Steam psig/°F/°F</th><th>Oxidant</th><th>WGS</th><th>Sulfur Control</th></tr>
<tr><td>D1A</td><td>0%</td><td>N/A</td><td>N/A</td><td rowspan="13">GEE Radiant Only</td><td rowspan="13">1800/1050/1050</td><td rowspan="13">95 mol% O_2</td><td>N/A</td><td rowspan="13">Selexol™</td></tr>
<tr><td>D1B</td><td>25%</td><td rowspan="12">Selexol™ 2nd Stage</td><td rowspan="12">Saline Formation</td><td>N/A</td></tr>
<tr><td>D2A</td><td>25%</td><td rowspan="4">One-Stage with bypass</td></tr>
<tr><td>D2B</td><td>45%</td></tr>
<tr><td>D2C</td><td>60%</td></tr>
<tr><td>D2D</td><td>75%</td></tr>
<tr><td>D3A</td><td>25%</td><td rowspan="5">Two-Stage with bypass</td></tr>
<tr><td>D3B</td><td>45%</td></tr>
<tr><td>D3C</td><td>60%</td></tr>
<tr><td>D3D</td><td>75%</td></tr>
<tr><td>D3E</td><td>85%</td></tr>
<tr><td>D4A</td><td>90%</td><td rowspan="3">Two-Stage without bypass</td></tr>
<tr><td>D4B</td><td>95%</td></tr>
<tr><td>D4C</td><td>97%</td></tr>
</table>

To determine the process configurations for less than 90 percent CO_2 removal (IGCC D2 and D3), the WGS bypass ratio and Selexol™ CO_2 removal efficiency were varied over a series of Aspen simulations of the entire GEE IGCC power plant to evaluate the impact on WGS and Selexol™ costs and net plant efficiency. As a starting point, the Selexol™ CO_2 removal efficiency (92.4 percent) used to model 90 percent CO_2 removal was fixed [5], and the WGS bypass ratio was adjusted to achieve the desired level of capture. The CO_2 removal level was then held constant by decreasing both the WGS bypass ratio (i.e., routing more syngas through the WGS reactor(s)) and the Selexol™ CO_2 removal efficiency. These step changes in the WGS bypass ratio lead to an increase in CO_2 partial pressure, which relaxes the CO_2 removal required by the Selexol™ process.

As shown in Exhibit 2-3, the cost of the WGS system decreases as the WGS bypass ratio increases since the quantity of syngas being shifted declines. The Selexol™ system cost increases with the WGS bypass ratio since a higher solvent circulation rate is required to maintain 60 percent CO_2 removal as the CO_2 partial pressure at the Selexol™ inlet decreases. However, the total cost of the WGS and Selexol™ systems, which is dominated by the cost of the Selexol™ system, gradually increases with the WGS bypass ratio. Meanwhile, the net plant

higher heating value (HHV) efficiency passes through a maximum value over the range of WGS bypass ratios. As a result, the WGS bypass ratios and Selexol™ CO_2 removal efficiencies used to model less than 90 percent CO_2 removal in this study (IGCC D2 and D3) correspond to the maximum net plant HHV efficiency.

Exhibit 2-3 Net Efficiency and Cost as a Function of WGS Bypass Ratio for 60% CO_2 Removal with IGCC Design 3

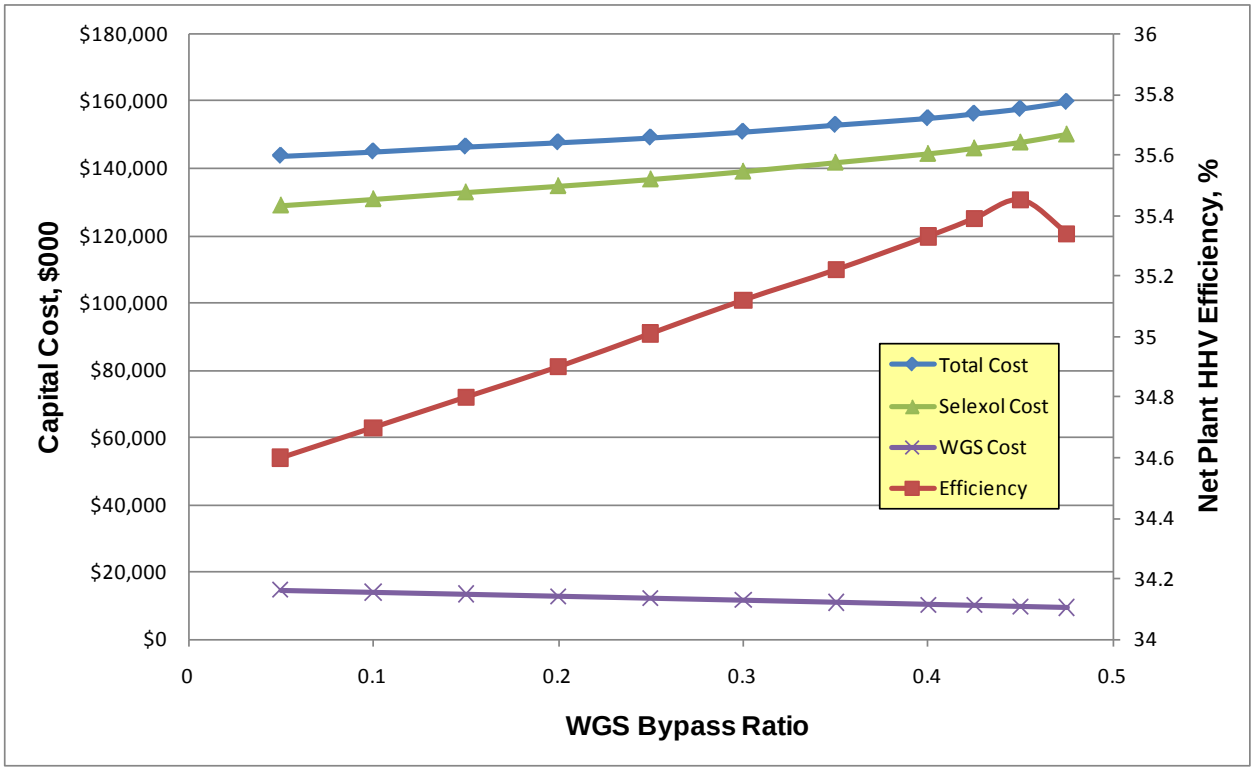

This procedure was repeated for each level of total CO_2 removal analyzed for IGCC D2 and D3 to determine the optimal WGS bypass ratio and Selexol™ CO_2 removal efficiency for these intermediate capture points. Data for these optimal configurations is provided in Exhibit 2-4 and Exhibit 2-5 for IGCC D2 and D3, respectively. These results indicate that the Selexol™ CO_2 removal efficiency increases with CO_2 partial pressure, which is the expected trend with a physical solvent-based system.

Exhibit 2-4 Process Configurations for IGCC D2

Total CO_2 Removal (%)	WGS	WGS Bypass Ratio (%)	Selexol™ CO_2 Removal (%)	P_{CO2} (psia)
25	One-Stage with Bypass	99.5	85.8	119.4
45		60	89	186.3
60		28.75	89.5	229.8
75		0	91	265.5

Exhibit 2-5 Process Configurations for IGCC D3

Total CO_2 Removal (%)	WGS	WGS Bypass Ratio (%)	Selexol™ CO_2 Removal (%)	P_{CO2} (psia)
25	Two-Stage with Bypass	99.75	86.31	119.7
45		69.4	90.04	186.5
60		45	90.1	230.1
75		21	90.4	264.3
85		5	90.52	289.3

A typical offering from a commercial catalyst vendor is a S:DG molar ratio of 0.3 at the outlet of the final WGS reactor. However, for less than 90 percent CO_2 capture (IGCC D2 and D3), this study uses a S:DG molar ratio of 0.25 at the outlet of the final WGS reactor. Operating with a lower S:DG ratio impedes the kinetics of CO to CO_2 conversion. Consequently, larger and more costly WGS reactors are required for a similar degree of conversion. Although a reduction in S:DG ratio requires a larger reactor volume (this analysis assumes a volume increase of 30 percent, and subsequently a 30 percent increase in reactor cost), the benefit of steam savings – which can then expanded through the steam turbine to produce additional power – is more than adequate to offset the increase in capital cost.

Thermal input to the IGCC plant is used to fully-load the combustion turbines. Any remaining energy in the combustion turbine exhaust is extracted to the maximum extent possible in a heat recovery steam generator in order to raise steam to generate additional power. The net power for the IGCC cases ranges from 523 to 622 MW. The range in net output is caused by the wide variance of CO_2 capture imposed from case-to-case. The differences in auxiliary loads are primarily attributed to CO_2 compression and the need for extraction steam in the WGS reactions, which reduces steam turbine output.

For each of the plant configurations in this study, an Aspen model was developed and used to generate material and energy balances. The material and energy balances were used as the basis for generating the capital and operating cost estimates. Ultimately a COE was calculated for each of the cases and is reported as the revenue requirement figure-of-merit.

The balance of this section provides details on the site characteristics, coal characteristics and costs, the study environmental targets, assumed capacity factor, raw water usage, and the cost estimating methodology.

2.1 Site Characteristics

The SC PC and GEE IGCC plants are assumed to be located at a generic site in the midwestern United States. The ambient conditions, consistent with the International Standard Organization (ISO) [9], and site characteristics are presented in Exhibit 2-6 and Exhibit 2-7, respectively.

Exhibit 2-6 Site Ambient Conditions

Elevation, ft	0
Barometric Pressure, psia	14.696
Design Ambient Temperature, Dry Bulb, °F	59
Design Ambient Temperature, Wet Bulb, °F	51.5
Design Ambient Relative Humidity, %	60

Exhibit 2-7 Site Characteristics

Location	Greenfield, midwestern United States[1]
Topography	Level
Size, acres	300
Transportation	Rail
Ash Disposal	Off Site
Water	Municipal (50%) / Groundwater (50%)
Access	Land locked, having also access by train and highway
CO_2	Compressed to 15.3 MPa (2,215 psia), transported 50 miles and sequestered in a saline formation at a depth of 4,055 feet

[1] Champaign County, Illinois, is assumed for assessment of construction costs.

The following design parameters will be considered site-specific, and will not be quantified for this study. Allowances for normal conditions and construction will be included in the cost estimates.

- Flood plain considerations
- Existing soil/site conditions
- Water discharges and reuse
- Rainfall/snowfall criteria
- Seismic design
- Buildings/enclosures
- Fire protection
- Local code height requirements
- Noise regulations – Impact on site and surrounding area

2.2 Coal Characteristics and Cost

The design coal characteristics are presented in Exhibit 2-8. All cases in this study were modeled using Illinois No. 6 bituminous coal.

Exhibit 2-8 Design Coal

Coal seam nomenclature	Herrin (No. 6)	
Coal name	Illinois No. 6	
Mine	Old Ben No. 26	
ASTM D388 Rank	High Volatile A Bituminous	
Proximate Analysis	**As-Received**	**Dry**
Moisture	11.12%	0.00%
Volatile Matter	34.99%	39.37%
Ash	9.70%	10.91%
Fixed Carbon	44.19%	49.72%
Total	100.00%	100.00%
Ultimate Analysis	**As-Received**	**Dry**
Carbon	63.75%	71.73%
Hydrogen	4.50%	5.06%
Nitrogen	1.25%	1.41%
Sulfur	2.51%	2.82%
Chlorine	0.29%	0.33%
Ash	9.70%	10.91%
Moisture	11.12%	0.00%
Oxygen	6.88%	7.74%
Total	100.00%	100.00%
Reported Heating Value	**As-Received**	**Dry**
HHV (Btu/lb)	11,666	13,126
LHV (Btu/lb)	11,252	12,660
HHV (kJ/kg)	27,135	30,531
LHV (kJ/kg)	26,171	29,447

Exhibit 2-8 Design Coal (continued)

Typical Ash Mineral Analysis		
Silica	SiO_2	45.0%
Aluminum Oxide	Al_2O_3	18.0%
Titanium Dioxide	TiO_2	1.0%
Iron Oxide	Fe_2O_3	20.0%
Calcium Oxide	CaO	7.0%
Magnesium Oxide	MgO	1.0%
Sodium Oxide	Na_2O	0.6%
Potassium Oxide	K_2O	1.9%
Phosphorus Pentoxide	P_2O_5	0.2%
Sulfur Trioxide	SO_3	3.5%
Undetermined		1.8%
Total		100.0%

Typical Ash Fusion Temperatures (°F)		
Reducing		
Initial – Limited deformation		1950 ºF
Softening	H=W	2030 ºF
Hemispherical	H=1/2W	2140 ºF
Fluid		2150 ºF
Oxidizing		
Initial – Limited deformation		2250 ºF
Softening	H=W	2300 ºF
Hemispherical	H=1/2W	2430 ºF
Fluid		2450 ºF
Hardgrove Grindability Index	60 HGI	

Exhibit 2-8 Design Coal (continued)

Average Trace Element Composition of Coal Shipped by Illinois Mines, Dry basis, ppm			
Trace Element		**Arithmetic Mean**	**Standard Deviation**
Arsenic	As	7.5	8.1
Boron	B	90	45
Beryllium	Be	1.2	0.7
Cadmium	Cd	0.5	0.9
Chlorine	Cl	1671	1189
Cobalt	Co	3.5	1.3
Chromium	Cr	14	6
Copper	Cu	9.2	2.5
Fluorine	F	93	36
Mercury	Hg	0.09	0.06
Lithium	Li	9.4	7.1
Manganese	Mn	38	32
Molybdenum	Mo	8.4	5.7
Nickel	Ni	14	5
Phosphorus	Ph	87	83
Lead	Pb	24	21
Tin	Sb	0.9	0.7
Selenium	Se	1.9	0.9
Thorium	Th	1.5	0.4
Uranium	Ur	2.2	1.9
Vanadium	V	31	16
Zinc	Zn	84.4	84.2

Note: Average trace element composition of coal shipped by Illinois mines is based on 34 samples, 2004 Keystone Coal Industry Manual [10]

The mercury content in the Illinois No. 6 coal is reported as an arithmetic mean value of 0.09 ppm (dry basis) with standard deviation of 0.06. Hence, as illustrated in Exhibit 2-9, there is a 50 percent probability that the mercury content in the Illinois No. 6 coal would not exceed 0.09 ppm (dry basis), and 99.9 percent probability that the mercury content in the Illinois No. 6 coal would not exceed 0.28 ppm (dry basis).

Exhibit 2-9 Probability Distribution of Mercury Concentration in the Illinois No. 6 Coal

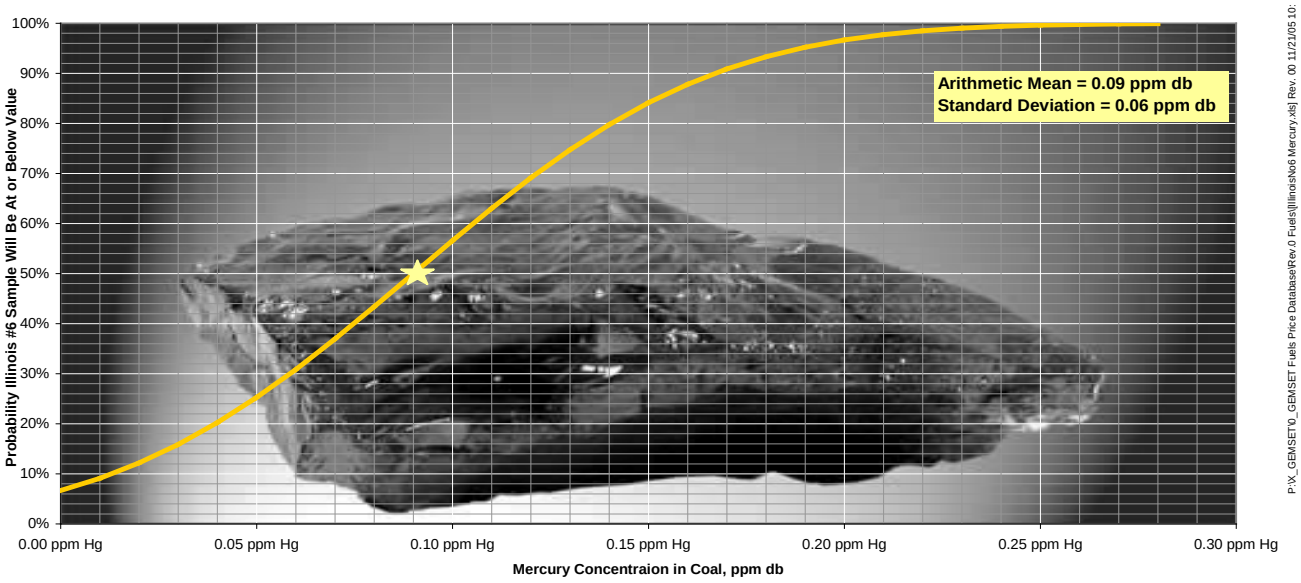

Source: 2004 Keystone Coal Industry Manual, Mining Media Publication

For the cases in this study, coal mercury content was assumed to be equal to the arithmetic mean mercury concentration plus one standard deviation, or 0.15 ppmd. About 84 percent of the coal samples represented in Exhibit 2-9 have a mercury concentration equal to or less than 0.15 ppmd.

The coal cost used in this study is $1.55/GJ ($1.64/MMBtu) (2007 cost of coal in June 2007 dollars). This cost was determined using the following information from the EIA 2008 AEO:

- The 2007 minemouth cost of Illinois No. 6 in 2006 dollars, $32.66/tonne ($29.63/ton), was obtained from Supplemental Table 112 of the EIA's 2008 AEO for eastern interior high-sulfur bituminous coal.
- The cost of Illinois No. 6 coal was escalated to 2007 dollars using the gross domestic product (GDP) chain-type price index from AEO 2008, resulting in a price of $33.67/tonne ($30.55/ton) [11].

Transportation costs for Illinois No. 6 were estimated to be 25 percent of the minemouth cost based on the average transportation rate of the respective coals to the surrounding regions [12]. The final delivered costs for Illinois No. 6 coal used in the calculations is $42.09/tonne ($38.18/ton) or $1.55/GJ ($1.64/MMBtu). (Note: The Illinois No. 6 coal cost of $1.6366/MMBtu was used in calculations, but only two decimal places are shown in the report.)

2.3 Design Sorbent Composition

Limestone from Greer Limestone mine in Morgantown, WV, is assumed as a design sorbent for the SC PC plant [13]. Sorbent is delivered to plant storage by truck. Limestone analysis is presented in Exhibit 2-10.

Exhibit 2-10 Sorbent Analysis

Supplier	Greer Industries, Inc.	**Analysis, %**
Calcium Carbonate	$CaCO_3$	80.40
Magnesium Carbonate	$MgCO_3$	3.50
Silica	SiO_2	10.32
Aluminum Oxide	Al_2O_3	3.16
Iron Oxide	Fe_2O_3	1.24
Sodium Oxide	Na_2O	0.23
Potassium Oxide	K_2O	0.72
Balance		0.43
	Total	**100.00**

2.4 Environmental Targets

In setting the environmental targets, a number of factors were considered, including current emission regulations, regulation trends, results from recent permitting activities, and the status of current best available control technology (BACT).

The current federal regulation governing new fossil-fuel fired electric utility steam generating units is the New Source Performance Standards (NSPS) as amended in June 2007 and shown in Exhibit 2-11. This represents the minimum level of control that would be required for a new fossil energy plant [14]. Stationary combustion turbine emission limits are further defined in 40 CFR Part 60, Subpart KKKK.

The new NSPS standards apply to units with the capacity to generate greater than 73 MW of power by burning fossil fuels, as well as cogeneration units that sell more than 25 MW of power and more than one-third of their potential output capacity to any utility power distribution system. In cases where both an emission limit and a percent reduction are presented, the unit has the option of meeting one or the other. All limits with the unit lb/MWh are based on gross power output.

Exhibit 2-11 Standards of Performance for Electric Utility Steam Generating Units Built, Reconstructed, or Modified After February 28, 2005

	New Units		Reconstructed Units		Modified Units	
	Emission Limit	% Reduction	Emission Limit (lb/MMBtu)	% Reduction	Emission Limit (lb/MMBtu)	% Reduction
PM	0.015 lb/MMBtu	99.9	0.015	99.9	0.015	99.8
SO_2	1.4 lb/MWh	95	0.15	95	0.15	90
NO_x	1.0 lb/MWh	N/A	0.11	N/A	0.15	N/A

Other regulations that could affect emissions limits from a new plant include the New Source Review (NSR) permitting process and Prevention of Significant Deterioration (PSD). The NSR process requires installation of emission control technology meeting either BACT determinations for new sources being located in areas meeting ambient air quality standards (attainment areas), or Lowest Achievable Emission Rate (LAER) technology for sources being located in areas not meeting ambient air quality standards (non-attainment areas). The Clean Air Act authorizes EPA to establish regulations to prevent significant deterioration of air quality due to emissions of any pollutant for which a national ambient air quality standard (NAAQS) has been promulgated. Environmental area designation varies by county and can be established only for a specific site location. Based on the EPA Green Book Non-attainment Area Map , relatively few areas in the midwestern United States are classified as “non-attainment”, and therefore BACT is chosen here rather than LAER [15].

In addition to federal regulations, state and local jurisdictions can impose even more stringent regulations on a new facility. However, since each new plant has unique environmental requirements, it was necessary to apply some judgment in setting the environmental targets for this study. For the purpose of this study, BACT was assumed to be adequate.

2.4.1 Supercritical PC Plant

The environmental approach for this study was to evaluate each case on the same regulatory design basis. A BACT approach was taken and used uniformly throughout the study. The BACT technologies assumed for this study meet the emission requirements of the 2006 NSPS. The emissions controls employed and the environmental targets are shown in Exhibit 2-12.

The environmental target represents the maximum allowable emissions. In some cases actual emissions are less than the target. For example, amine-based CO_2 capture requires a polishing scrubber to reduce SO_2 concentrations to less than 10 ppmv. As a result, the SO_2 emissions are substantially less than the environmental target.

Exhibit 2-12 Environmental Targets for PC Cases

Technology	Pulverized Coal Boilers
Sulfur Control Technology	Wet Limestone FGD
Sulfur Limits	98% efficiency or ≤ 0.10 lb $SO_2/10^6$ Btu
NO_x Control Technology	LNB w/OFA (or OFO) and SCR in air-based cases
NOx Limits	0.07 lb/10^6 Btu
PM Control Technology	Fabric Filter
PM Limits	99.8% or ≤ 0.015 lb/10^6 Btu
Hg Control Technology	Co-benefit capture
Hg Limits	90% removal

2.4.2 GEE IGCC Plant

The IGCC environmental targets were chosen to match the Electric Power Research Institute's (EPRI) design basis for their CoalFleet for Tomorrow Initiative and are shown in Exhibit 2-13 [16]. EPRI notes that these are design targets and are not to be used for permitting values.

The BACT emission limits assumed for this study exceed the emission requirements of the NSPS as amended in June 2007 [14]. It is possible that state and local requirements could supersede NSPS or BACT and impose even more stringent requirements.

Exhibit 2-13 Environmental Targets for IGCC Cases

Pollutant	Environmental Target	NSPS Limit	Control Technology
NO_x	15 ppm (dry) @ 15% O_2	1.0 lb/MWh	Low-NO_x burners and syngas nitrogen dilution
SO_2	0.0128 lb/MMBtu	1.4 lb/MWh	Selexol™ or MDEA
Particulate Matter (Filterable)	0.0071 lb/MMBtu	0.015 lb/MMBtu	Quench and water scrubber
Mercury	> 90% capture	20 x 10-6 lb/MWh	Carbon bed

2.4.3 Carbon Dioxide

CO_2 is not currently regulated. However, the possibility exists that carbon limits will be imposed in the future, and this study examines cases that include a reduction in CO_2 emissions. Because

the form of emission limits, should they be imposed, is not known, CO_2 emissions are reported on both a lb/(gross) MWh and lb/(net) MWh basis in each emissions table.

For the SC PC cases, it is assumed that all of the fuel carbon is converted to CO_2 in the flue gas. This study analyzes a wide range of CO_2 removal efficiencies by bypassing a portion of the flue gas around the amine-based Econamine FG Plus^{SM} process.

For the IGCC cases, this study analyzes a wide range of CO_2 removal efficiencies, based on carbon input in the coal and excluding carbon that exits with the gasifier slag, by investigating various process configurations. Process parameters manipulated to control the level of total CO_2 removal include the number of WGS reactors employed, WGS bypass ratio, S:DG ratio at the WGS outlet, and the Selexol™ CO_2 removal efficiency.

2.5 Capacity Factor

This study assumes that each new plant would be dispatched any time it is available and would be capable of generating maximum capacity when online; therefore, capacity factor and availability are equal. The availability for combustion cases was determined using the Generating Availability Data System (GADS) from the North American Electric Reliability Council (NERC) [17]. Since there are only two operating IGCC plants in North America, the same database was not useful for determining IGCC availability. Rather, input from EPRI and their work on the CoalFleet for Tomorrow Initiative were used to set the IGCC case capacity factor.

NERC defines an equivalent availability factor (EAF) as a measure of the plant capacity factor assuming there is always a demand for the output. The EAF accounts for planned and scheduled derated hours as well as seasonal derated hours. As such, the EAF matches this study's definition of capacity factor.

The average EAF for coal-fired plants in the 400–599 MW size range was 84.9 percent in 2004 and averaged 83.9 percent from 2000 to 2004. Given that many of the plants in this size range are older, the EAF was rounded up to 85 percent and that value was used as the SC PC plant capacity factor.

EPRI examined the historical forced and scheduled outage times for IGCCs and concluded that the reliability factor (which looks at forced or unscheduled outage time only) for a single train IGCC (no spares) would be about 90 percent [18]. To get the availability factor, one has to deduct the scheduled outage time. In reality, the scheduled outage times could differ amongst the different gasifier technologies. However, the differences are relatively small and would have minimal impact on the capacity factor, so for this study it was assumed to be constant at a 30-day planned outage per year (or two 15-day outages). The planned outage would amount to 8.2 percent of the year, so the availability factor would be (90 percent - 8.2 percent), or 81.8 percent.

There are four operating IGCC's worldwide that use a solid feedstock and are primarily power producers (Polk, Wabash, Buggenum, and Puertollano). A 2006 report by Higman et al. examined the reliability of these IGCC power generation units and concluded that typical annual

on-stream times are around 80 percent [19]. The capacity factor would be somewhat less than the on-stream time since most plants operate at less than full load for some portion of the operating year. Given the results of the EPRI study and the Higman paper, a capacity factor of 80 percent was chosen for IGCC with no spare gasifier required.

The addition of CO_2 capture was assumed not to impact the capacity factor even without redundant pipelines, wells, or subsurface infrastructure. This assumption was made to enable a comparison based on the impact of capital and variable operating costs only. Any reduction in assumed capacity factor would further increase the COE with CO_2 capture.

2.6 Raw Water Withdrawal

A water balance was performed for each case on the major water consumers in the process. The total water demand for each subsystem was determined. Internal recycle water available from various sources like boiler feedwater blowdown and condensate from syngas was applied to offset the water demand. The difference between demand and recycle is raw water withdrawal. Raw water withdrawal is the water removed from the ground or diverted from a surface-water source for use in the plant. Raw water consumption is also accounted for and is defined as the portion of the raw water withdrawn that is evaporated, transpired, incorporated into products or otherwise not returned to the water source it was withdrawn from.

Raw water withdrawal was assumed to be provided 50 percent by a publicly owned treatment works (POTW) and 50 percent from groundwater. Raw water withdrawal is defined as the water metered from a raw water source and used in the plant processes for any and all purposes, such as cooling tower makeup, boiler feedwater makeup, quench system makeup, and slag handling makeup. The difference between withdrawal and process water returned to the source is consumption. Consumption represents the overall impact of the process on the water source.

The largest consumer of raw water in all cases is cooling tower makeup. The plants included in this study use a conventional wet cooling tower. Boiler feedwater blowdown and a portion of the sour water stripper blowdown were assumed to be treated and recycled to the cooling tower. The cooling tower blowdown and the balance of the sour water stripper (SWS) blowdown streams were assumed to be treated and 90 percent returned to the water source with the balance sent to the ash ponds for evaporation.

2.7 Cost Estimating Methodology

The estimating methodology for capital costs, operations and maintenance costs, and CO_2 TS&M costs are described below. The finance structure, basis for the discounted cash flow analysis, and first-year COE cost calculations are also described.

2.7.1 Capital Costs

As illustrated in Exhibit 2-14, this study reports capital cost at four levels: Bare Erected Cost (BEC), Total Plant Cost (TPC), Total Overnight Cost (TOC) and Total As-spent Capital (TASC). BEC, TPC and TOC are “overnight” costs and are expressed in “base-year” dollars. The base

year is the first year of capital expenditure, which for this study is assumed to be 2007. TASC is expressed in mixed-year, current-year dollars over the entire capital expenditure period, which is assumed to last five years for coal plants (2007 to 2012).

Exhibit 2-14 Capital Cost Levels and their Elements

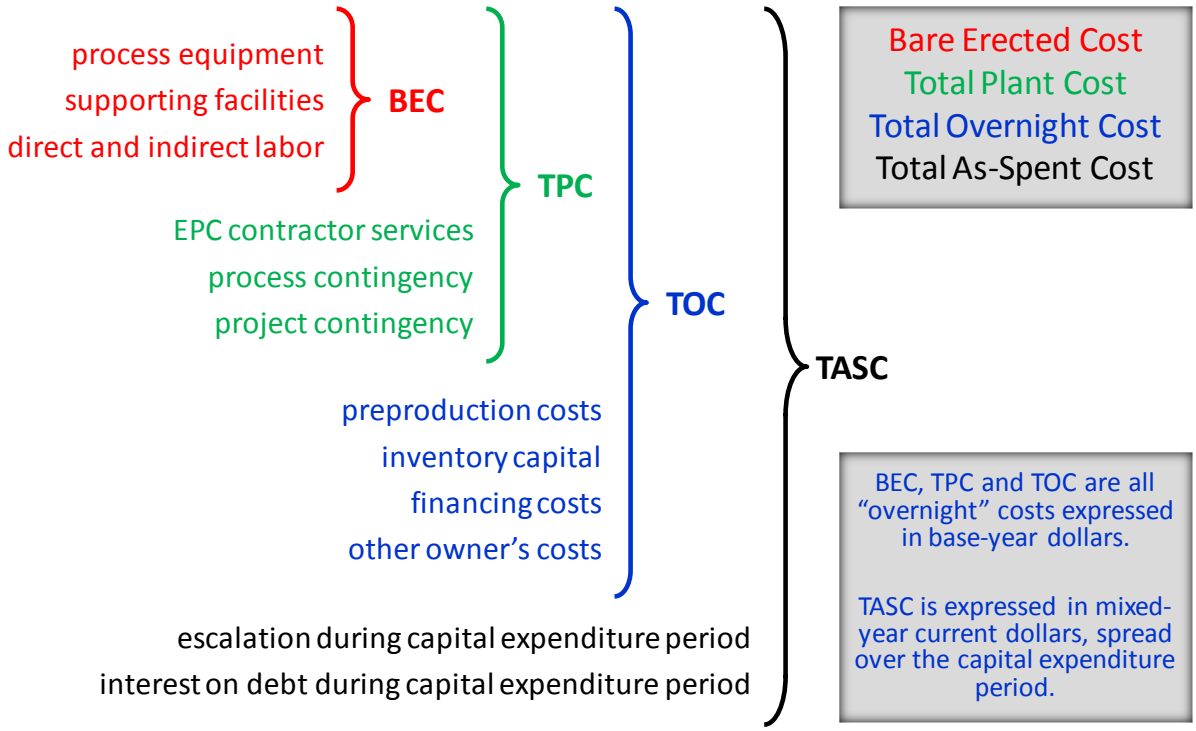

The BEC comprises the cost of process equipment, on-site facilities and infrastructure that support the plant (e.g., shops, offices, labs, road), and the direct and indirect labor required for its construction and/or installation. The cost of EPC services and contingencies is not included in BEC. BEC is an overnight cost expressed in base-year (2007) dollars.

The TPC comprises the BEC plus the cost of services provided by the engineering, procurement and construction (EPC) contractor and project and process contingencies. EPC services include: detailed design, contractor permitting (i.e., those permits that individual contractors must obtain to perform their scopes of work, as opposed to project permitting, which is not included here), and project/construction management costs. TPC is an overnight cost expressed in base-year (2007) dollars.

The TOC comprises the TPC plus owner's costs. TOC is an "overnight" cost, expressed in base-year (2007) dollars and as such does not include escalation during construction or interest during construction. TOC is an overnight cost expressed in base-year (2007) dollars.

The TASC is the sum of all capital expenditures as they are incurred during the capital expenditure period including their escalation. TASC also includes interest during construction.

Accordingly, TASC is expressed in mixed, current-year dollars over the capital expenditure period.

Cost Estimate Basis and Classification

The TPC and Operation and Maintenance (O&M) costs for each of the cases in the study were estimated by WorleyParsons using an in-house database and conceptual estimating models. Costs were further calibrated using a combination of adjusted vendor-furnished and actual cost data from recent design projects.

Recommended Practice 18R-97 of the Association for the Advancement of Cost Engineering International (AACE) describes a Cost Estimate Classification System as applied in Engineering, Procurement and Construction for the process industries [20].

Most techno-economic studies completed by NETL feature cost estimates intended for the purpose of a "Feasibility Study" (AACE Class 4). Exhibit 2-15 describes the characteristics of an AACE Class 4 Cost Estimate. Cost estimates in this study have an expected accuracy range of -15%/+30%.

Exhibit 2-15 Features of an AACE Class 4 Cost Estimate

Project Definition	Typical Engineering Completed	Expected Accuracy
1 to 15%	plant capacity, block schematics, indicated layout, process flow diagrams for main process systems, and preliminary engineered process and utility equipment lists	-15% to -30% on the low side, and +20% to +50% on the high side

Cost estimates in this report reflect nth-of-a-kind (NOAK) costs for plants that only contain fully mature technologies which have been widely deployed at commercial scale, e.g., PC and NGCC power plants without CO2 capture. The cost of such plants has dropped over time due to the "learning by doing" and risk reduction benefits that result from serial deployments as well as from continuing R&D.

Cost estimates in this report reflect the cost of the next commercial offering for plants that include technologies that are not yet fully mature and/or which have not yet been serially deployed in a commercial context, e.g., IGCC plants and any plant with CO2 capture. These cost estimates for next commercial offerings do not include the unique cost premiums associated with first-of-a-kind (FOAK) plants that must demonstrate emerging technologies and resolve the cost and performance challenges associated with initial iterations. However, these estimates do utilize currently available cost bases for emerging technologies with associated process contingencies applied at the appropriate subsystem levels.

Cost estimates for all of the plants, regardless of technology maturity, are based on many design assumptions that affect costs, including the use of a favorable site with no unusual characteristics that make construction more costly. The primary value of this report lies not in the absolute

accuracy of cost estimates for the individual cases (estimated to be -15%/+30%), but in the fact that all cases were evaluated using a common methodology with an internally consistent set of technical and economic assumptions. This consistency of approach allows meaningful comparisons of relative costs among the cases evaluated.

2.7.2 System Code-of-Accounts

The costs are grouped according to a process/system oriented code of accounts. This type of code-of-account structure has the advantage of grouping all reasonably allocable components of a system or process so they are included in the specific system account. (This would not be the case had a facility, area, or commodity account structure been chosen instead).

2.7.3 Plant Maturity

The post-combustion CO_2 removal technology for the PC capture cases is immature technology. This technology remains unproven at commercial scale in power generation applications.

The pre-combustion CO_2 removal technology for the IGCC capture cases has a stronger commercial experience base. Pre-combustion CO_2 removal from syngas streams has been proven in chemical processes with similar conditions to that in IGCC plants, but has not been demonstrated in IGCC applications. While no commercial IGCC plant yet uses CO_2 removal technology in commercial service, there are currently IGCC plants with CO_2 capture in the planning stages.

2.7.4 Contracting Strategy

The estimates are based on an EPCM approach utilizing multiple subcontracts. This approach provides the Owner with greater control of the project, while minimizing, if not eliminating most of the risk premiums typically included in an Engineer/Procure/Construct (EPC) contract price.

In a traditional lump sum EPC contract, the Contractor assumes all risk for performance, schedule, and cost. However, as a result of current market conditions, EPC contractors appear more reluctant to assume that overall level of risk. Rather, the current trend appears to be a modified EPC approach where much of the risk remains with the Owner. Where Contractors are willing to accept the risk in EPC type lump-sum arrangements, it is reflected in the project cost. In today's market, Contractor premiums for accepting these risks, particularly performance risk, can be substantial and increase the overall project costs dramatically.

The EPCM approach used as the basis for the estimates here is anticipated to be the most cost effective approach for the Owner. While the Owner retains the risks, the risks become reduced with time, as there is better scope definition at the time of contract award(s).

2.7.5 Estimate Scope

The estimates represent a complete power plant facility on a generic site. The plant boundary limit is defined as the total plant facility within the "fence line" including coal receiving and

water supply system, but terminating at the high voltage side of the main power transformers. TS&M cost is not included in the reported capital cost or O&M costs, but is treated separately and added to the COE.

2.7.6 Capital Cost Assumptions

WorleyParsons developed the capital cost estimates for each plant using the company's in-house database and conceptual estimating models for each of the specific technologies. This database and the respective models are maintained by WorleyParsons as part of a commercial power plant design base of experience for similar equipment in the company's range of power and process projects. A reference bottoms-up estimate for each major component provides the basis for the estimating models.

Other key estimate considerations include the following:

- Labor costs are based on Midwest, Merit Shop. The estimating models are based on U.S. Gulf Coast and the labor has been factored to Midwest. The basis for the factors is the PAS, Inc. (PAS) "Merit Shop Wage & Benefit Survey," which is published annually. Based on the data provided in PAS, WorleyParsons used the weighted average payroll plus fringe rate for a standard craft distribution as developed for the estimating models. PAS presents information for eight separate regions. For this study, Region 5 (IL, IN, MI, MN, OH, and WI) was selected.
- The estimates are based on a competitive bidding environment, with adequate skilled craft labor available locally.
- Labor is based on a 50-hour work-week (5-10s). No additional incentives such as per-diems or bonuses have been included to attract craft labor.
- While not included at this time, labor incentives may ultimately be required to attract and retain skilled labor depending on the amount of competing work in the region, and the availability of skilled craft in the area at the time the projects proceed to construction.
- The estimates are based on a greenfield site.
- The site is considered to be Seismic Zone 1, relatively level, and free from hazardous materials, archeological artifacts, or excessive rock. Soil conditions are considered adequate for spread footing foundations. The soil bearing capability is assumed adequate such that piling is not needed to support the foundation loads.
- Costs are limited to within the "fence line," terminating at the high voltage side of the main power transformers with the exception of costs included for TS&M, which are treated as an addition to COE.
- Engineering and Construction Management are estimated at 8-10 percent of BEC. These costs consist of all home office engineering and procurement services as well as field construction management costs. Site staffing generally includes a construction manager, resident engineer, scheduler, and personnel for project controls, document control, materials management, site safety, and field inspection.

Price Fluctuations

During the course of this study, the prices of equipment and bulk materials fluctuated quite substantially. Some reference quotes pre-dated the 2007 year cost basis while others were received post-2007. All vendor quotes used to develop these estimates were adjusted to June 2007 dollars accounting for the price fluctuations. Adjustments of costs pre-dating 2007 benefitted from a vendor survey of actual and projected pricing increases from 2004 through mid-2007 that WorleyParsons conducted for another project. The results of that survey were used to validate/recalibrate the corresponding escalation factors used in the conceptual estimating models. The more recent economic down turn has resulted in a reduction of commodity prices such that many price indices have similar values in January 2010 compared to June 2007. For example, the Chemical Engineering Plant Cost Index was 532.7 in June 2007 and 532.9 in January 2010, and the Gross Domestic Product Chain-type Price Index was 106.7 on July 1, 2007 and 110.0 on January 1, 2010. While these overall indices are nearly constant, it should be noted that the cost of individual equipment types may still deviate from the June 2007 reference point.

Exclusions

The capital cost estimate includes all anticipated costs for equipment and materials, installation labor, professional services (Engineering and Construction Management), and contingency. The following items are excluded from the capital costs:

- All taxes, with the exception of payroll and property taxes (property taxes are included with the fixed O&M costs)
- Site specific considerations – including, but not limited to, seismic zone, accessibility, local regulatory requirements, excessive rock, piles, laydown space, etc.
- Labor incentives in excess of 5-10s
- Additional premiums associated with an EPC contracting approach

Contingency

Process and project contingencies are included in estimates to account for unknown costs that are omitted or unforeseen due to a lack of complete project definition and engineering. Contingencies are added because experience has shown that such costs are likely, and expected, to be incurred even though they cannot be explicitly determined at the time the estimate is prepared.

Capital cost contingencies do not cover uncertainties or risks associated with:

- scope changes
- changes in labor availability or productivity
- delays in equipment deliveries
- changes in regulatory requirements
- unexpected cost escalation
- performance of the plant after startup (e.g., availability, efficiency)

Process Contingency

Process contingency is intended to compensate for uncertainty in cost estimates caused by performance uncertainties associated with the development status of a technology. Process contingencies are applied to each plant section based on its current technology status.

As shown in Exhibit 2-16, AACE International Recommended Practice 16R-90 provides guidelines for estimating process contingency based on EPRI philosophy [21].

Process contingencies have been applied to the estimates in this study as follows:

- Slurry Prep and Feed – 5 percent on all IGCC cases
- Gasifiers and Syngas Coolers – 15 percent on all IGCC cases – next-generation commercial offering and integration with the power island
- Two Stage Selexol – 20 percent on all IGCC capture cases - unproven technology at commercial scale in IGCC service
- Mercury Removal – 5 percent on all IGCC cases – minimal commercial scale experience in IGCC applications
- CO2 Removal System – 20 percent on all PC cases - post-combustion process unproven at commercial scale for power plant applications
- CTG – 5 percent on all IGCC non-capture cases – syngas firing and ASU integration; 10 percent on all IGCC capture cases – high hydrogen firing.
- Instrumentation and Controls – 5 percent on all IGCC accounts and 5 percent on the PC cases – integration issues

Exhibit 2-16 AACE Guidelines for Process Contingency

Technology Status	Process Contingency (% of Associated Process Capital)
New concept with limited data	40+
Concept with bench-scale data	30-70

Small pilot plant data	20-35
Full-sized modules have been operated	5-20
Process is used commercially	0-10

Process contingency is typically not applied to costs that are set equal to a research goal or programmatic target since these values presume to reflect the total cost.

Project Contingency

AACE 16R-90 states that project contingency for a "budget-type" estimate (AACE Class 4 or 5) should be 15 to 30 percent of the sum of BEC, EPC fees and process contingency. This was used as a general guideline, but some project contingency values outside of this range occur based on WorleyParsons' in-house experience.

Owner's Costs

Exhibit 2-18 explains the estimation method for owner's costs. With some exceptions, the estimation method follows guidelines in Sections 12.4.7 to 12.4.12 of AACE International Recommended Practice No. 16R-90 [21]. The Electric Power Research Institute's "Technical Assessment Guide (TAG®) – Power Generation and Storage Technology Options" also has guidelines for estimating owner's costs. The EPRI and AACE guidelines are very similar. In instances where they differ, this study has sometimes adopted the EPRI approach.

Interest during construction and escalation during construction are not included as owner's costs but are factored into the COE and are included in TASC. These costs vary based on the capital expenditure period and the financing scenario. Ratios of TASC/TOC determined from the PSFM are used to account for escalation and interest during construction. Given TOC, TASC can be determined from the ratios given in Exhibit 2-17.

Exhibit 2-17 TASC/TOC Factors

Finance Structure	High Risk IOU	Low Risk IOU
Capital Expenditure Period	**Five Years**	**Five Years**
TASC/TOC	1.140	1.134

Exhibit 2-18 Owner's Costs Included in TOC

Owner's Cost	Estimate Basis
Prepaid Royalties	Any technology royalties are assumed to be included in the associated equipment cost, and thus are not included as an owner's cost.
Preproduction (Start-Up) Costs	• 6 months operating labor • 1 month maintenance materials at full capacity • 1 month non-fuel consumables at full capacity • 1 month waste disposal • 25% of one month's fuel cost at full capacity • 2% of TPC Compared to AACE 16R-90, this includes additional costs for operating labor (6 months versus 1 month) to cover the cost of training the plant operators, including their participation in startup, and involving them occasionally during the design and construction. AACE 16R-90 and EPRI TAG® differ on the amount of fuel cost to include; this estimate follows EPRI.
Working Capital	Although inventory capital (see below) is accounted for, no additional costs are included for working capital.
Inventory Capital	• 0.5% of TPC for spare parts • 60 day supply (at full capacity) of fuel. • 60 day supply (at full capacity) of non-fuel consumables (e.g., chemicals and catalysts) that are stored on site. Does not include catalysts and adsorbents that are batch replacements such as WGS, COS, and SCR catalysts and activated carbon. AACE 16R-90 does not include an inventory cost for fuel, but EPRI TAG® does.
Land	• $3,000/acre (300 acres for IGCC and PC, 100 acres for NGCC)
Financing Cost	• 2.7% of TPC This financing cost (not included by AACE 16R-90) covers the cost of securing financing, including fees and closing costs but not including interest during construction (or AFUDC). The "rule of thumb" estimate (2.7% of TPC) is based on a 2008 private communication with a capital services firm.

Owner's Cost	Estimate Basis
Other Owner's Costs	• 15% of TPC This additional lumped cost is not included by AACE 16R-90 or EPRI TAG®. The "rule of thumb" estimate (15% of TPC) is based on a 2009 private communication with WorleyParsons. Significant deviation from this value is possible as it is very site and owner specific. The lumped cost includes: - Preliminary feasibility studies, including a Front-End Engineering Design (FEED) study - Economic development (costs for incentivizing local collaboration and support) - Construction and/or improvement of roads and/or railroad spurs outside of site boundary - Legal fees - Permitting costs - Owner's engineering (staff paid by owner to give third-party advice and to help the owner oversee/evaluate the work of the EPC contractor and other contractors) - Owner's contingency (Sometimes called "management reserve", these are funds to cover costs relating to delayed startup, fluctuations in equipment costs, unplanned labor incentives in excess of a five-day/ten-hour-per-day work week. Owner's contingency is NOT a part of project contingency.) This lumped cost does NOT include: - EPC Risk Premiums (Costs estimates are based on an Engineering Procurement Construction Management approach utilizing multiple subcontracts, in which the owner assumes project risks for performance, schedule and cost) - Transmission interconnection: the cost of interconnecting with power transmission infrastructure beyond the plant busbar. - Taxes on capital costs: all capital costs are assumed to be exempt from state and local taxes. - Unusual site improvements: normal costs associated with improvements to the plant site are included in the bare erected cost, assuming that the site is level and requires no environmental remediation. Unusual costs associated with the following design parameters are excluded: flood plain considerations, existing soil/site conditions, water discharges and reuse, rainfall/snowfall criteria, seismic design, buildings/enclosures, fire protection, local code height requirements, noise regulations.

2.7.7 Operations and Maintenance Costs

The production costs or operating costs and related maintenance expenses (O&M) pertain to those charges associated with operating and maintaining the power plants over their expected life. These costs include:

- Operating labor
- Maintenance – material and labor
- Administrative and support labor
- Consumables
- Fuel
- Waste disposal
- Co-product or by-product credit (that is, a negative cost for any by-products sold)

There are two components of O&M costs; fixed O&M, which is independent of power generation, and variable O&M, which is proportional to power generation.

Operating Labor

Operating labor cost was determined based on of the number of operators required for each specific case. The average base labor rate used to determine annual cost is $34.65/hour. The associated labor burden is estimated at 30 percent of the base labor rate. Taxes and insurance are included as fixed O&M costs totaling 2 percent of the TPC.

Maintenance Material and Labor

Maintenance cost was evaluated on the basis of relationships of maintenance cost to initial capital cost. This represents a weighted analysis in which the individual cost relationships were considered for each major plant component or section.

Administrative and Support Labor

Labor administration and overhead charges are assessed at rate of 25 percent of the burdened O&M labor.

Consumables

The cost of consumables, including fuel, was determined on the basis of individual rates of consumption, the unit cost of each specific consumable commodity, and the plant annual operating hours.

Quantities for major consumables such as fuel and sorbent were taken from technology-specific heat and mass balance diagrams developed for each plant application. Other consumables were evaluated on the basis of the quantity required using reference data.

The quantities for initial fills and daily consumables were calculated on a 100 percent operating capacity basis. The annual cost for the daily consumables was then adjusted to incorporate the annual plant operating basis, or CF.

Initial fills of the consumables, fuels and chemicals, are different from the initial chemical loadings, which are included with the equipment pricing in the capital cost.

Waste Disposal

Waste quantities and disposal costs were determined/evaluated similarly to the consumables. In this study both slag from the IGCC cases and fly ash and bottom ash from the PC cases are considered a waste with a disposal cost of $17.89/tonne ($16.23/ton). The carbon used for mercury control in the IGCC cases is considered a hazardous waste with disposal cost of $926/tonne ($840/ton).

Co-Products and By-Products

By-product quantities were also determined similarly to the consumables. However, due to the variable marketability of these by-products, specifically gypsum and sulfur, no credit was taken for their potential salable value.

It should be noted that by-product credits and/or disposal costs could potentially be an additional determining factor in the choice of technology for some companies and in selecting some sites. A high local value of the product can establish whether or not added capital should be included in the plant costs to produce a particular co-product. Ash and slag are both potential by-products in certain markets, and in the absence of activated carbon injection in the PC cases, the fly ash would remain uncontaminated and have potential marketability. However, as stated above, the ash and slag are considered wastes in this study with a concomitant disposal cost.

2.7.8 CO_2 Transport, Storage and Monitoring

The capital and operating costs for CO_2 TS&M were independently estimated by NETL. Those costs were converted to a TS&M COE increment that was added to the plant COE.

CO_2 TS&M was modeled based on the following assumptions:

- CO_2 is supplied to the pipeline at the plant fence line at a pressure of 15.3 MPa (2,215 psia). The CO_2 product gas composition varies in the cases presented, but is expected to meet the specification described in Exhibit 2-19 [22]. A glycol dryer located near the mid-point of the compression train is used to meet the moisture specification.

Exhibit 2-19 CO_2 Pipeline Specification

Parameter	Units	Parameter Value
Inlet Pressure	MPa (psia)	15.3 (2,215)
Outlet Pressure	MPa (psia)	10.4 (1,515)
Inlet Temperature	°C (°F)	35 (95)
N_2 Concentration	ppmv	< 300
O_2 Concentration	ppmv	< 40
Ar Concentration	ppmv	< 10
H_2O Concentration	ppmv	< 150

- The CO_2 is transported 80 km (50 miles) via pipeline to a geologic sequestration field for injection into a saline formation.
- The CO_2 is transported and injected as a SC fluid in order to avoid two-phase flow and achieve maximum efficiency [23]. The pipeline is assumed to have an outlet pressure (above the SC pressure) of 8.3 MPa (1,200 psia) with no recompression along the way. Accordingly, CO_2 flow in the pipeline was modeled to determine the pipe diameter that results in a pressure drop of 6.9 MPa (1,000 psi) over an 80 km (50 mile) pipeline length [24]. (Although not explored in this study, the use of boost compressors and a smaller pipeline diameter could possibly reduce capital costs for sufficiently long pipelines.) The diameter of the injection pipe will be of sufficient size that frictional losses during injection are minimal and no booster compression is required at the well-head in order to achieve an appropriate down-hole pressure, with hydrostatic head making up the difference between the injection and reservoir pressure.
- The saline formation is at a depth of 1,236 m (4,055 ft) and has a permeability of 22 millidarcy (md) (22 μm^2) and formation pressure of 8.4 MPa (1,220 psig) [22]. This is considered an average storage site and requires roughly one injection well for each 9,360 tonnes (10,320 short tons) of CO_2 injected per day [22]. The assumed aquifer characteristics are tabulated in Exhibit 2-20.

The cost metrics utilized in this study provide a best estimate of TS&M costs for a “favorable” sequestration project, and may vary significantly based on variables such as terrain to be crossed by the pipeline, reservoir characteristics, and number of land owners from which sub-surface rights must be acquired. Raw capital and operating costs are derived from detailed cost metrics found in the literature, escalated to June 2007-year dollars using appropriate price indices. These costs were then verified against values quoted by industrial sources where possible. Where regulatory uncertainty exists or costs are undefined, such as liability costs and the acquisition of underground pore volume, analogous existing policies were used for representative cost scenarios.

Exhibit 2-20 Deep, Saline Aquifer Specification

Parameter	Units	Base Case
Pressure	MPa (psi)	8.4 (1,220)
Thickness	m (ft)	161 (530)
Depth	m (ft)	1,236 (4,055)
Permeability	Md	22
Pipeline Distance	km (miles)	80 (50)
Injection Rate per Well	tonne (ton) CO_2/day	9,360 (10,320)

The following sections describe the sources and methodology used for each metric.

TS&M Captial Costs

TS&M capital costs include both a 20 percent process contingency and 30 percent project contingency.

In several areas, such as Pore Volume Acquisition, Monitoring, and Liability, cost outlays occur over a longer time period, up to 100 years. In these cases a capital fund is established based on the net present value of the cost outlay, and this fund is then levelized similar to the other costs.

Transport Costs

CO_2 transport costs are broken down into three categories: pipeline costs, related capital expenditures, and O&M costs.

Pipeline costs are derived from data published in the Oil and Gas Journal's (O&GJ) annual Pipeline Economics Report for existing natural gas, oil, and petroleum pipeline project costs from 1991 to 2003. These costs are expected to be analogous to the cost of building a CO_2 pipeline, as noted in various studies [22, 23, 25]. The University of California performed a regression analysis to generate cost curves from the O&GJ data: (1) Pipeline Materials, (2) Direct Labor, (3) Indirect Costs, and (4) Right-of-way acquisition, with each represented as a function of pipeline length and diameter [25]. These cost curves were escalated to the June 2007 year dollars used in this study.

Related capital expenditures were based on the findings of a previous study funded by DOE/NETL, Carbon Dioxide Sequestration in Saline Formations – Engineering and Economic Assessment [22]. This study utilized a similar basis for pipeline costs (O&GJ Pipeline cost data up to the year 2000) but added a CO_2 surge tank and pipeline control system to the project.

Transport O&M costs were assessed using metrics published in a second DOE/NETL sponsored report entitled Economic Evaluation of CO_2 Storage and Sink Enhancement Options [23]. This

study was chosen due to the reporting of O&M costs in terms of pipeline length, whereas the other studies mentioned above either (a) do not report operating costs, or (b) report them in absolute terms for one pipeline, as opposed to as a length- or diameter-based metric.

Storage Costs

Storage costs were divided into five categories: (1) Site Screening and Evaluation, (2) Injection Wells, (3) Injection Equipment, (4) O&M Costs, and (5) Pore Volume Acquisition. With the exception of Pore Volume Acquisition, all of the costs were obtained from Economic Evaluation of CO_2 Storage and Sink Enhancement Options [23]. These costs include all of the costs associated with determining, developing, and maintaining a CO_2 storage location, including site evaluation, well drilling, and the capital equipment required for distributing and injecting CO_2.

Pore Volume Acquisition costs are the costs associated with acquiring rights to use the sub-surface volume where the CO_2 will be stored, i.e., the pore space in the geologic formation. These costs were based on recent research by Carnegie Mellon University, which examined existing sub-surface rights acquisition as it pertains to natural gas storage [26]. The regulatory uncertainty in this area combined with unknowns regarding the number and type (private or government) of property owners, require a number of "best engineering judgment" decisions to be made. In this study it was assumed that long-term lease rights were acquired from the property owners in the projected CO_2 plume growth region for a nominal fee, and that an annual "rent" was paid when the plume reached each individual acre of their property for a period of up to 100 years from the injection start date. The present value of the life cycle pore volume costs are assessed at a 10 percent discount rate and a capital fund is set up to pay for these costs over the 100 year rent scenario.

Liability Protection

Liability Protection addresses the fact that if damages are caused by injection and long-term storage of CO_2, the injecting party may bear financial liability. Several types of liability protection schemes have been suggested for CO_2 storage, including Bonding, Insurance, and Federal Compensation Systems combined with either tort law (as with the Trans-Alaska Pipeline Fund), or with damage caps and preemption, as is used for nuclear energy under the Price Anderson Act [27]. However, at present, a specific liability regime has yet to be dictated either at a Federal or (to our knowledge) State level. However, certain state governments have enacted legislation, which assigns liability to the injecting party, either in perpetuity (Wyoming) or until ten years after the cessation of injection operations, pending reservoir integrity certification, at which time liability is turned over to the state (North Dakota and Louisiana) [28,29,30]. In the case of Louisiana, a trust fund totaling five million dollars is established over the first ten years (120 months) of injection operations for each injector. This fund is then used by the state for CO_2 monitoring and, in the event of an at-fault incident, damage payments.

Liability costs assume that a bond must be purchased before injection operations are permitted in order to establish the ability and good will of an injector to address damages where they are deemed liable. A figure of five million dollars was used for the bond based on the Louisiana fund level. This bond level may be conservatively high, in that the Louisiana fund covers both liability and monitoring, but that fund also pertains to a certified reservoir where injection

operations have ceased, having a reduced risk compared to active operations. The bond cost was not escalated.

Monitoring Costs

Monitoring costs were evaluated based on the methodology set forth in the International Energy Agency (IEA) Greenhouse Gas (GHG) R&D Programme's Overview of Monitoring Projects for Geologic Storage Projects report [31]. In this scenario, operational monitoring of the CO_2 plume occurs over 30 years (during plant operation) and closure monitoring occurs for the following fifty years (for a total of eighty years). Monitoring is via electromagnetic (EM) survey, gravity survey, and periodic seismic survey; EM and gravity surveys are ongoing while seismic survey occurs in years 1, 2, 5, 10, 15, 20, 25, and 30 during the operational period, then in years 40, 50, 60, 70, and 80 after injection ceases.

2.7.9 Finance Structure, Discounted Cash Flow Analysis, and COE

The global economic assumptions are listed in Exhibit 2-21.

Finance structures were chosen based on the assumed type of developer/owner (investor-owned utility (IOU) or independent power producer) and the assumed risk profile of the plant being assessed. For this study the owner/developer was assumed to be an IOU. Cases were considered either high risk, with the inclusion of CO_2 capture, or low risk, without CO_2 capture. Exhibit 2-22 describes the high-risk and low-risk IOU finance structures that were assumed for this study. These finance structures were recommended in a 2008 NETL report based on interviews with project developers/owners, financial organizations and law firms [32].

Exhibit 2-21 Global Economic Assumptions

Parameter	Value
TAXES	
Income Tax Rate	38% (Effective 34% Federal, 6% State)
Capital Depreciation	20 years, 150% declining balance
Investment Tax Credit	0%
Tax Holiday	0 years
CONTRACTING AND FINANCING TERMS	
Contracting Strategy	Engineering Procurement Construction Management (owner assumes project risks for performance, schedule and cost)
Type of Debt Financing	Non-Recourse (collateral that secures debt is limited to the real assets of the project)
Repayment Term of Debt	15 years
Grace Period on Debt Repayment	0 years
Debt Reserve Fund	None
ANALYSIS TIME PERIODS	
Capital Expenditure Period	5 Years
Operational Period	30 years
Economic Analysis Period (used for IRROE)	35 Years (capital expenditure period plus operational period)
TREATMENT OF CAPITAL COSTS	
Capital Cost Escalation During Capital Expenditure Period (nominal annual rate)	3.6%[1]
Distribution of Total Overnight Capital over the Capital Expenditure Period (before escalation)	5-Year Period: 10%, 30%, 25%, 20%, 15%
Working Capital	zero for all parameters
% of Total Overnight Capital that is Depreciated	100% *(this assumption introduces a very small error even if a substantial amount of TOC is actually non-depreciable)*
ESCALATION OF OPERATING REVENUES AND COSTS	
Escalation of COE (revenue), O&M Costs, and Fuel Costs (nominal annual rate)	3.0%[2]

[1] A nominal average annual rate of 3.6 percent is assumed for escalation of capital costs during construction. This rate is equivalent to the nominal average annual escalation rate for process plant construction costs between 1947 and 2008 according to the *Chemical Engineering* Plant Cost Index.

[2] An average annual inflation rate of 3.0 percent is assumed. This rate is equivalent to the average annual escalation rate between 1947 and 2008 for the U.S. Department of Labor's Producer Price Index for Finished Goods, the so-called "headline" index of the various Producer Price Indices. (The Producer Price Index for the Electric Power Generation Industry may be more applicable, but that data does not provide a long-term historical perspective since it only dates back to December 2003.)

Exhibit 2-22 Financial Structure for Investor Owned Utility High Risk Projects

Type of Security	% of Total	Current (Nominal) Dollar Cost	Weighted Current (Nominal) Cost	After Tax Weighted Cost of Capital
Low Risk				
Debt	50	4.5%	2.25%	
Equity	50	12%	6%	
Total			8.25%	7.39%
High Risk				
Debt	45	5.5%	2.475%	
Equity	55	12%	6.6%	
Total			9.075%	8.13%

DCF Analysis and Cost of Electricity

The NETL Power Systems Financial Model (PSFM), a nominal-dollar[3] (current dollar) discounted cash flow (DCF) analysis tool, was used to calculate COE[4]. The COE is the revenue received by the generator per net megawatt-hour during the power plant's first year of operation, *assuming that the COE escalates thereafter at a nominal annual rate equal to the general inflation rate, i.e., that it remains constant in real terms over the operational period of the power plant*. To calculate the COE, the PSFM was used to determine a "base-year" (2007) COE that, when escalated at an assumed nominal annual general inflation rate of 3 percent[5], provided the stipulated internal rate of return on equity over the entire economic analysis period (capital expenditure period plus thirty years of operation). Since this analysis assumes that COE

[3] Since the analysis takes into account taxes and depreciation, a nominal dollar basis is preferred to properly reflect the interplay between depreciation and inflation.

[4] For this calculation, "cost of electricity" is somewhat of a misnomer because from the power plant's perspective it is actually the "price" received for the electricity generated to achieve the stated IRROE. However, since the price paid for generation is ultimately charged to the end user, from the customer's perspective it is part of the cost of electricity.

[5] This nominal escalation rate is equal to the average annual inflation rate between 1947 and 2008 for the U.S. Department of Labor's Producer Price Index for Finished Goods. This index was used instead of the Producer Price Index for the Electric Power Generation Industry because the Electric Power Index only dates back to December 2003 and the Producer Price Index is considered the "headline" index for all of the various Producer Price Indices.

increases over the economic analysis period at the nominal annual general inflation rate, it remains constant in real terms and the first-year COE is equivalent to the base-year COE when expressed in base-year (2007) dollars. Since 2007 is the first year of the capital expenditure period, it is also the base year for the economic analysis. Accordingly, it is convenient to report the results of the economic analysis in base-year (June 2007) dollars.

Estimating COE with Capital Charge Factors

For scenarios that adhere to the global economic assumptions listed in Exhibit 2-21 and utilize the finance structure listed in Exhibit 2-22, the following simplified equation can be used to estimate COE as a function of TOC[6], fixed O&M, variable O&M (including fuel), capacity factor and net output. The equation requires the application of the capital charge factors (CCF) listed in Exhibit 2-23. These CCFs are valid only for the global economic assumptions listed in Exhibit 2-21, the stated finance structure, and the stated capital expenditure period.

Exhibit 2-23 Capital Charge Factors for COE Equation

Finance Structure	High Risk IOU	Low Risk IOU
Capital Expenditure Period	**Five Years**	**Five Years**
Capital Charge Factor (CCF)	0.124	0.116

All factors in the COE equation are expressed in base-year dollars. The base year is the first year of capital expenditure, which for this study is assumed to be 2007. As shown in Exhibit 2-21, all factors (COE, O&M and fuel) are assumed to escalate at a nominal annual general inflation rate of 3.0 percent. Accordingly, all first-year costs (COE and O&M) are equivalent to base-year costs when expressed in base-year (2007) dollars.

[6] Although TOC is used in the simplified COE equation, the CCF that multiplies it accounts for escalation during construction and interest during construction (along with other factors related to the recovery of capital costs).

$$COE = \frac{\begin{matrix} first\ year \\ capital\ charge \end{matrix} + \begin{matrix} first\ year \\ fixed\ operating \\ costs \end{matrix} + \begin{matrix} first\ year \\ variable\ operating \\ costs \end{matrix}}{\begin{matrix} annual\ net\ megawatt\ hours \\ of\ power\ generated \end{matrix}}$$

$$COE = \frac{(CCF)(TOC) + OC_{FIX} + (CF)(OC_{VAR})}{(CF)(MWH)}$$

where:

COE =	revenue received by the generator ($/MWh, equivalent to mills/kWh) during the power plant's first year of operation (*but expressed in base-year dollars*), assuming that the COE escalates thereafter at a nominal annual rate equal to the general inflation rate, i.e., that it remains constant in real terms over the operational period of the power plant.
CCF =	capital charge factor taken from Exhibit 2-23 that matches the applicable finance structure and capital expenditure period
TOC =	total overnight capital, expressed in *base-year dollars*
OC_{FIX} =	the sum of all fixed annual operating costs, *expressed in base-year dollars*
OC_{VAR} =	the sum of all variable annual operating costs, including fuel at 100 percent capacity factor, *expressed in base-year dollars*
CF =	plant capacity factor, assumed to be constant over the operational period
MWH =	annual net megawatt-hours of power generated at 100 percent capacity factor

2.8 IGCC STUDY COST ESTIMATES COMPARED TO INDUSTRY ESTIMATES

The estimated TOC for IGCC cases in this study ranges from $2,447 for IGCC with 0% capture to $3,501/kW for IGCC with 97% capture. Plant size ranges from 523 - 622 MW (net) for 0% and 97% capture plants, respectively.

Within the power industry there are several power producers interested in pursuing construction of an IGCC plant. While these projects are still in the relatively early stages of development, some cost estimates have been published. Published estimates tend to be limited in detail, leaving it to the reader to speculate as to what is contained within the estimate. In November 2007, the Indiana Utility Regulatory Commission approved Duke Energy's proposal to build an IGCC plant in Edwardsport, Indiana. The estimated cost to build the 630 MW plant is $4,472/kW in June 2007 dollars. Duke expects the plant to begin operation in 2012. Other published estimates for similar proposed non-CO_2 capture gasification plants range from

$2,483/kW to $3,122/kW in June 2007 dollars. Corresponding plant sizes range form 770 - 600 MW, respectively. Published estimates from similar CO_2 capture facilities range from $4,581/kW to $5,408/kW, in June 2007 dollars, with sizes ranging from 400 to 580 MW [33,34,35,36].[7]

Differences in Cost Estimates

Project Scope

For this report, the scope of work is generally limited to work inside the project "fence line". For outgoing power, the scope stops at the high side terminals of the Generator Step-up Transformers (GSUs).

Some typical examples of items outside the fenceline include:

- New access roads and railroad tracks
- Upgrades to existing roads to accommodate increased traffic
- Makeup water pipe outside the fenceline
- Landfill for on-site waste (slag) disposal
- Natural gas line for backup fuel provisions
- Plant switchyard
- Electrical transmission lines & substation

Estimates in this report are based on a generic mid-western greenfield site having "normal" characteristics. Accordingly, the estimates do not address items such as:

- Piles or caissons
- Rock removal
- Excessive dewatering
- Expansive soil considerations
- Excessive seismic considerations
- Extreme temperature considerations
- Hazardous or contaminated soils
- Demolition or relocation of existing structures
- Leasing of offsite land for parking or laydown
- Busing of craft to site
- Costs of offsite storage

This report is based on a reasonably "standard" plant. No unusual or extraordinary process equipment is included such as:

- Excessive water treatment equipment
- Air-cooled condenser

[7] Costs were adjusted to June 2007 using the Chemical Engineering Plant Cost Index

- Automated coal reclaim
- Zero Liquid Discharge equipment
- SCR catalyst (IGCC cases only)

For non-capture cases, which are likely the most appropriate comparison against industry published estimates, this report is based on plant equipment sized for non-capture only. None of the equipment is sized to accommodate a future conversion to CO_2 capture.

Labor

This report is based on Merit Shop (non-union) labor. If a project is to use Union labor, there is a strong likelihood that overall labor costs will be greater than those estimated in this report.

This report is based on a 50 hour work week, with an adequate local supply of skilled craft labor. No additional incentives such as per-diems or bonuses have been included to attract and retain skilled craft labor.

Contracting Methodology

The estimates in this report are based on a competitively bid, multiple subcontract approach, often referred to as EPCM. Accordingly, the estimates do not include premiums associated with an EPC approach. It is believed that, given current market conditions, the premium charged by an EPC contractor could be as much as 30 percent or more over an EPCM approach.

3. Case 1 - Supercritical PC with Variable CO_2 Capture

3.1 System Descriptions

The SC PC system descriptions are provided in the subsections below.

3.1.1 Coal and Sorbent Receiving and Storage

The function of the coal portion of the Coal and Sorbent Receiving and Storage system is to provide the equipment required for unloading, conveying, preparing, and storing the fuel delivered to the plant. The scope of the system is from the coal conveyor receiving hoppers up to the coal storage silos. The system is designed to support short-term operation at maximum power output at the 5 percent over pressure/valves wide open (OP/VWO) condition (16 hours) and long-term operation of 90 days or more at the maximum continuous rating (MCR).

The scope of the sorbent receiving and storage systems includes truck roadways, turnarounds, unloading hoppers, conveyors, and the day storage bin.

Operation Description – The 3" x 0 bituminous Illinois No. 6 coal is delivered to the site by unit trains of 100-ton rail cars. Each unit train consists of 100, 100-ton rail cars. The unloading is done by a trestle bottom dumper, which unloads the coal to two receiving hoppers. Coal from each hopper is fed directly into a vibratory feeder. The 3" x 0 coal from the feeder is discharged onto a belt conveyor (No. 1). The coal is then transferred to a conveyor (No. 2) that transfers the coal to the reclaim area. The conveyor passes under a magnetic plate separator to remove tramp iron, and then to the reclaim pile.

Coal from the reclaim pile is fed by two vibratory feeders, located under the pile, onto a belt conveyor (No. 3), which transfers the coal to the coal surge bin located in the crusher tower. The coal is reduced in size to 1¼" x 0 by the coal crusher. The coal is then transferred by conveyor (No. 4) to the transfer tower. In the transfer tower the coal is routed to the tripper that loads the coal into one of the parallel boiler silos.

Lime is delivered to the site using 23 tonne (25 ton) trucks and conveyed to storage. Lime is stored in a bulk storage lime silo. The lime is pneumatically conveyed to a day bin.

3.1.2 Steam Generator and Ancillaries

The steam generator for the supercritical plant is a once-through, spiral-wound, Benson-boiler, wall-fired, balanced draft type unit with a water-cooled dry bottom furnace. It includes a superheater, reheater, economizer, and air heater.

It is assumed for the purposes of this study that the power plant is designed to be operated as a base-loaded unit but with some consideration for daily or weekly cycling, as can be cost effectively included in the base design.

The combustion systems for supercritical steam conditions are equipped with low-NO_x burners (LNBs) and overfire air (OFA).

3.1.2.1 Scope and General Arrangement

The steam generator comprises the following:

- Once-through type steam generator
- Low NOx Coal burners and light oil igniters/ warmup system
- Startup circuit, including integral separators
- Water-cooled furnace, dry bottom
- Soot blower system
- Primary air (PA) fans
- Two-stage superheater
- Air preheaters (Ljungstrom type)
- Induced draft (ID) fans
- Reheater
- Coal feeders and pulverizers
- Forced draft (FD) fans
- Economizer
- Spray type desuperheater
- Overfire air system

The steam generator operates as follows:

3.1.2.2 Feedwater and Steam

Feedwater enters the bottom header of the economizer and passes upward through the economizer tube bank, through stringer tubes that support the primary superheater, and discharges to the economizer outlet headers. From the outlet headers, water flows to the furnace hopper inlet headers via external downcomers. Water then flows upward through the furnace hopper and furnace wall tubes. From the furnace, water flows to the steam water separator. During low load operation (operation below the critical point), the water from the separator is returned to the economizer inlet with the boiler recirculating pump. Operation at loads above the critical point is once through.

Steam flows from the separator through the furnace roof to the convection pass enclosure walls, primary superheater, through the first stage of water attemperation, to the furnace platens. From the platens, the steam flows through the second stage of attemperation and then to the intermediate superheater. The steam then flows to the final superheater and on to the outlet pipe terminal. Two stages of spray attemperation are used to provide tight temperature control in all high temperature sections during rapid load changes.

Steam returning from the turbine passes through the primary reheater surface, then through crossover piping containing inter-stage attemperation. The crossover piping feeds the steam to the final reheater banks and then out to the turbine. Inter-stage attemperation is used to provide outlet temperature control during load changes.

3.1.2.3 Air and Combustion Products

Combustion air from the FD fans is heated in Ljungstrom type air preheaters, recovering heat energy from the exhaust gases exiting the boiler. This air is distributed to the burner windbox as

secondary air. Air for conveying pulverized coal to the burners is supplied by the PA fans. This air is heated in the Ljungstrom type air preheaters to permit drying of the pulverized coal, and a portion of the air from the PA fans bypasses the air preheaters to be used for regulating the outlet coal/air temperature leaving the mills.

The pulverized coal and air mixture flows to the coal nozzles at various elevations of the furnace. The hot combustion products rise to the top of the boiler and pass through the superheater and reheater sections. The gases then pass through the economizer and air preheater. The gases exit the steam generator at this point and flow to the Selective Catalytic Reduction (SCR) reactor, FGD system, fabric filter, ID fan, and stack.

3.1.2.4 Fuel Feed

The crushed coal is fed through feeders to each of the mills (pulverizers), where its size is reduced to approximately 72 percent passing 200 mesh with less than 0.5 percent remaining on 50 mesh [37]. The pulverized coal exits each mill via the coal piping and is distributed to the coal nozzles in the furnace walls using air supplied by the PA fans.

3.1.2.5 Ash Removal

The furnace bottom comprises several hoppers, with a clinker grinder under each hopper. The hoppers are of welded steel construction, lined with refractory. The hopper design incorporates a water-filled seal trough around the upper periphery for cooling and sealing. Water and ash discharged from the hopper pass through the clinker grinder to an ash sluice system for conveyance to hydrobins, where the ash is dewatered before it is transferred to trucks for offsite disposal. The bottom ash from the boiler is fed into a clinker grinder. The clinker grinder is provided to break up any clinkers that may form. From the clinker grinders the bottom ash is sluiced to hydrobins for dewatering and offsite removal by truck. The steam generator incorporates fly ash hoppers under the economizer outlet and air heater outlet.

3.1.2.6 Burners

A boiler of this capacity employs approximately 24 to 36 coal nozzles arranged at multiple elevations. Each burner is designed as a low-NO_x configuration, with staging of the coal combustion to minimize NO_x formation. In addition, overfire air nozzles are provided to further stage combustion and thereby minimize NO_x formation.

Oil-fired pilot torches are provided for each coal burner for ignition, warm-up and flame stabilization at startup and low loads.

3.1.2.7 Soot Blowers

The soot-blowing system utilizes an array of 50 to 150 retractable nozzles and lances that clean the furnace walls and convection surfaces with jets of high-pressure steam. The blowers are sequenced to provide an effective cleaning cycle depending on the coal quality and design of the furnace and convection surfaces. Electric motors drive the soot blowers through their cycles.

3.1.3 NO_x Control System

The plant is designed to achieve the environmental target of 0.07 lb NOx/MMBtu. Two measures are taken to reduce the NO_x. The first is a combination of low-NOx burners and the introduction of staged overfire air in the boiler. The low-NO_x burners and overfire air reduce the emissions to about 0.2 lb/MMBtu.

The second measure taken to reduce the NOx emissions is the installation of a SCR system prior to the air heater. SCR uses aqueous ammonia and a catalyst to reduce NO_x to N_2 and H_2O. The SCR system consists of three subsystems: reactor vessel, ammonia storage and injection, and gas flow control. The SCR system is designed for 65 percent reduction with 2 ppmv ammonia slip at the end of the catalyst life. This, along with the low-NO_x burners, achieves the emission limit of 0.07 lb/MMBtu.

The SCR capital costs are included with the boiler costs, as is the cost for the initial load of catalyst.

Selective non-catalytic reduction (SNCR) was considered for this application. However, with the installation of the low-NO_x burners and overfire air system, the boiler exhaust gas contains relatively small amounts of NO_x, which makes removal of the quantity of NO_x with SNCR to reach the emissions limit of 0.07 lb/MMBtu difficult. SNCR works better in applications that contain medium to high quantities of NO_x and require removal efficiencies in the range of 40 to 60 percent. SCR, because of the catalyst used in the reaction, can achieve higher efficiencies with lower concentrations of NO_x.

Operation Description – The reactor vessel is designed to allow proper retention time for the ammonia to contact the $_{NOx}$ in the boiler exhaust gas. Ammonia is injected into the gas immediately prior to entering the reactor vessel. The catalyst contained in the reactor vessel enhances the reaction between the ammonia and the NO_x in the gas. Catalysts consist of various active materials such as titanium dioxide, vanadium pentoxide, and tungsten trioxide. The operating range for vanadium/titanium-based catalysts is 260 °C (500 °F) to 455 °C (850 °F). The boiler is equipped with economizer bypass to provide flue gas to the reactors at the desired temperature during periods of low flow rate, such as low load operation. Also included with the reactor vessel is soot-blowing equipment used for cleaning the catalyst.

The aqueous ammonia storage and injection system consists of the unloading facilities, bulk storage tank, vaporizers, dilution air skid, and injection grid.

The flue gas flow control consists of ductwork, dampers, and flow straightening devices required to route the boiler exhaust to the SCR reactor and then to the air heater. The economizer bypass and associated dampers for low load temperature control are also included.

3.1.4 Particulate Control

A pulse-jet baghouse with air to cloth ratio of 3.5 ft/min is located after the air heater. The baghouse is provided with a spare compartment for off line cleaning to maintain the opacity at 10

percent or less. The waste will be pneumatically conveyed to a waste storage silo with a 3-day storage capacity, which is in accordance with typical utility design.

Operation Description – The bag house is designed to achieve 99.8 percent removal efficiency and consists of two separate single-stage, in-line, and 10-compartment units. Each unit is a high air-to-cloth ratio design with a pulse-jet on-line cleaning system. The ash is collected on the outside of the 8 meter long bags, which are supported by steel cages. The dust cake is removed by a pulse of compressed air. The bag material is polyphenylensulfide (PPS) with an intrinsic Teflon (PTFE) coating [38]. Each compartment contains a number of gas passages with filter bags and heated ash hoppers supported by a rigid steel casing. The fabric filter is provided with necessary control devices, inlet gas distribution devices, insulators, inlet and outlet nozzles, expansion joints, and other items as required. The fabric filter reduces particulate loading in the stack gas to below the required levels.

3.1.5 Flue Gas Desulfurization

3.1.5.1 Wet FGD Process

The limestone-based, forced oxidation flue gas scrubbing system is designed to remove 98 percent of the SO_2 from the flue gas. The design incorporates features which have been developed over many years of commercial operation and pilot work in utility flue gas cleaning.

Listed below are the major items that comprise the wet FGD portion of the tower systems.

1. Limestone silos with weigh feeders, capable of supplying the required limestone to the slurry handling systems
2. Limestone preparation systems
3. Absorber
4. Cyclone separators, with spares sufficient to meet the requirements of the FGD absorber systems for gypsum slurry primary dewatering
5. Oxidation air compressors
6. Vacuum filter system

Exhibit 3-1 shows a typical wet FGD process flow diagram.

Exhibit 3-1 Typical B&W Wet FGD Process Flow Diagram

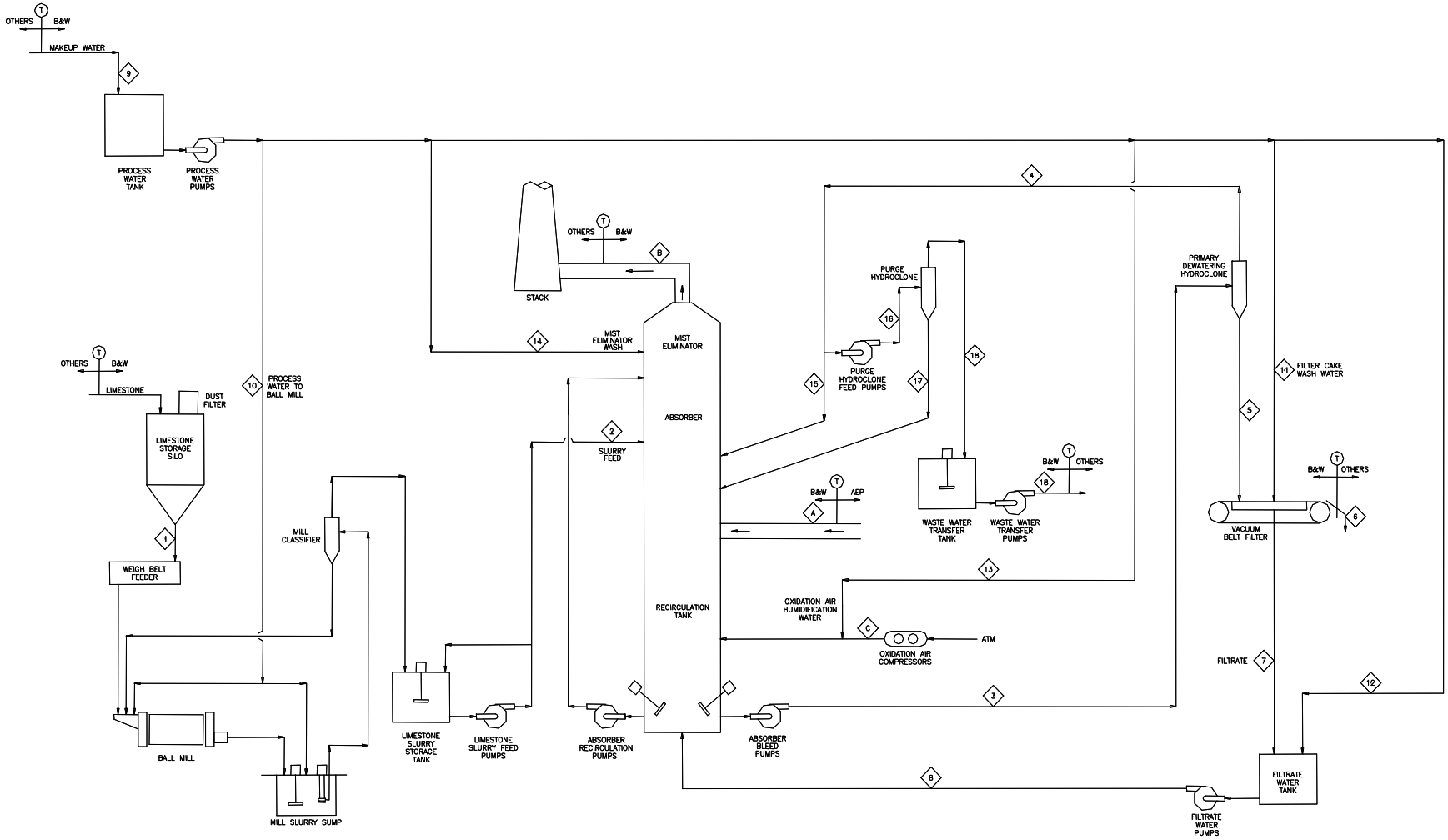

Source: B&W Figure

3.1.5.2 Absorber Tower

Exhibit 3-2 shows a typical wet scrubber absorber tower arrangement. The absorber tower includes two gas distribution devices (trays), two spray headers of countercurrent absorber sprays, and a two-stage mist eliminator section. As the flue gas enters the absorber, it turns upward and is evenly distributed across the absorber cross-section by the absorber tray. Experience has shown that such a gas distribution device is needed to optimize SO_2 removal. This experience parallels that of the electrostatic precipitator industry and their need for carefully designed gas distribution plates. In addition to providing an even gas flow for the main spray zone, the absorber tray also provides an area of intimate contact between the flue gas and limestone slurry.

The gas leaving the absorber tray passes through several countercurrent spray levels, which are supplied with recirculating slurry from the absorber's reaction tank, and continues through two layers of Chevron type mist eliminators for water droplet removal before exiting the absorber tower through the outlet cone and outlet flue.

The in-situ oxidation system provides oxygen to the absorber reaction tank via an ambient air stream. This oxygen system forces calcium sulfite ($CaSO_3 \cdot ½H_2O$) formed by the SO_2 removal process to be oxidized to calcium sulfate ($CaSO_4 \cdot 2H_2O$).

Absorber recirculation pumps mounted on modularized base plates provide assemblies for easy installation. The assemblies can be bolted directly to concrete foundations. Four recirculation pumps are supplied. Three are required for operation at the normal operation design point.

Exhibit 3-2 Wet Scrubber Arrangement

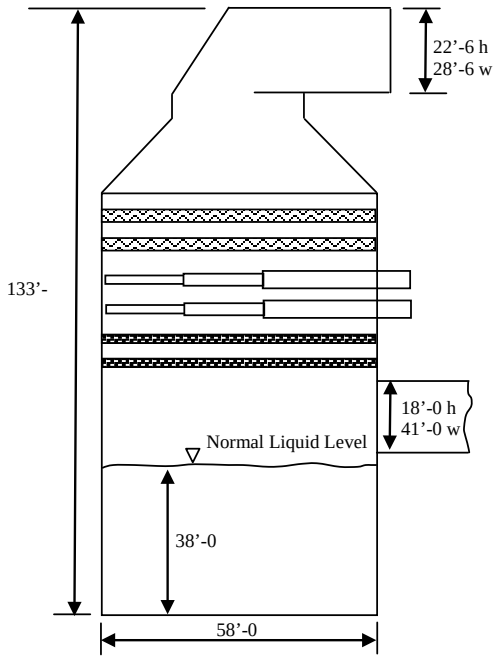

Source: B&W Figure

3.1.5.3 Limestone Preparation System

The function of the limestone handling and reagent preparation system is to receive, store, convey, and grind the limestone delivered to the plant. The scope of the system is from the storage pile up to the limestone feed system. The system is designed to support continuous baseload operation. Truck roadways, turnarounds, and unloading hoppers are included in this reference plant design.

For the purposes of this conceptual design, limestone is assumed to be delivered to the plant by 25-ton trucks. The limestone is unloaded onto a storage pile located above vibrating feeders. The limestone is fed onto belt conveyors via vibrating feeders and then to day bins equipped with vent filters. Each day bin supplies a 100 percent capacity size ball mill via a weigh feeder. The wet ball mill accepts the limestone and grinds the limestone to 90 to 95 percent passing 325 mesh (44 microns). Water is added at the inlet to the ball mill to create limestone slurry. The reduced limestone slurry is then discharged into a mill slurry tank. Mill recycle pumps, two per tank, pump the limestone water slurry to an assembly of hydrocyclones and distribution boxes. The slurry is classified into several streams, based on suspended solids content and size distribution.

The hydrocyclone underflow with oversized limestone is directed back to the mill for further grinding. The hydrocyclone overflow with correctly sized limestone is routed to a reagent storage tank. Reagent distribution pumps direct slurry from the tank to the absorber module.

3.1.5.4 Gypsum Dewatering

Gypsum slurry is bled from the absorber by absorber blowdown pumps that feed a primary cyclone separator which concentrates the solids of the gypsum slurry stream. Hydrocyclone overflow is gravity fed to the back to the absorber. Hydrocyclone underflow is gravity fed to the vacuum filters. Each hydrocyclone is supplied with a valve network which can isolate flow to individual hydrocyclones. To reduce the suspended solids in the system, a small volume of the hydrocyclone overflow is pumped by two purge pumps (1 operating, 1 spare) to the wastewater treatment system.

Cyclone separator underflow gravity flows to the belt vacuum filters for further dewatering. The gypsum is dewatered to 90 percent solids and washed to produce wallboard quality gypsum, which drops from the belt vacuum filters onto a conveying system. The vacuum receiver filtrate pumps pump the filtrate from the belt vacuum filters to the filtrate water tank. The filtrate water is recycled back to the FGD system by means of the filtrate water pumps.

One filtrate water tank is provided with minimum storage capacity of 4 hours of water usage by the absorber at full load normal operation. One wash tank for combined use of the mist eliminator wash system with a minimum storage capacity of 15 minutes is provided.

3.1.5.5 Mercury Removal

Removal of 90 percent of the mercury entering with the coal is achieved in a combination of equipment and processes. Since the Illinois No. 6 coal is relatively high in chlorine, most of the mercury entering with the coal will leave the boiler in an oxidized form (85-90 percent). The

SCR system will further promote the oxidation of Hg. Some additional oxidation will occur in the airheater, and a small portion of the mercury (oxidized and elemental) will be captured with unburned carbon in the baghouse. The majority of the oxidized mercury will be captured in the wet scrubber. An inexpensive additive is injected into the wet scrubber to enhance mercury removal and inhibit any re-emission to achieve the 90 percent removal rate.

3.1.6 Flue Gas System/Stack

The flue gas from the air preheater will be sent to the absorbers. The gases enter the baghouse to collect the waste products and the fly ash. Flue gas exits the baghouse and enters the Induced Draft (ID) fan suction.

3.1.7 Carbon Dioxide Recovery Facility

The CO_2 recovery facility consists of the Fluor Econamine FG Plus^{SM} system followed by compression and drying.

3.1.7.1 Econamine FG Plus^{SM}

A Carbon Dioxide Recovery (CDR) facility is used to remove 30 to 99 percent of the CO_2 in the flue gas exiting the FGD unit, purify it, and compress to a supercritical condition. The CDR is comprised of the flue gas supply, SO_2 polishing, CO_2 absorption, solvent stripping and reclaiming, and CO_2 compression and drying.

The CO_2 absorption/stripping/solvents reclaim process is based on the Fluor Econamine FG Plus^{SM} technology [39]. A typical flow sheet is shown in Exhibit 3-3. The Econamine FG Plus^{SM} process uses a formulation of monethanolamine (MEA) and a proprietary corrosion inhibitor to recover CO_2 from the flue gas. This process is designed to recover high-purity CO_2 from low-pressure streams that contain oxygen, such as flue gas from coal-fired power plants, gas turbine exhaust gas, and other waste gases.

SO_2 Polishing and Flue Gas Cooling

To prevent the accumulation of heat stable salts, the incoming flue gas must have an SO_2 concentration of 10 ppmv or less. This is achieved by passing the gas exiting the FGD system through an SO_2 polishing step. The polishing step consists of a non-plugging, low-differential-pressure, spray-baffle-type scrubber using a 20 wt% solution of sodium hydroxide (NaOH). A removal efficiency of 80 to 85 percent is necessary to reduce SO_2 emissions from the FGD outlet to 10 ppmv as required by the Econamine process. The polishing scrubber proposed for this application has been demonstrated in numerous industrial applications throughout the world and can achieve removal efficiencies of over 95 percent if necessary.

The polishing scrubber also serves as the flue gas cooling system. Cooling water from the PC plant is used to reduce the temperature and hence moisture content of the saturated flue gas exiting the FGD system. Flue gas is cooled beyond the CO_2 absorption process requirements to

32 °C (90 °F) to account for the subsequent temperature increase of about 17 °C (30 °F) in the flue gas blower. Downstream from the Polishing Scrubber flue gas pressure is boosted in the Flue Gas Blowers by approximately 0.014 MPa (2 psi) to overcome pressure drop in the CO_2 absorber tower.

Circulating Water System

Cooling water is provided from the PC plant circulating water system and returned to the plant cooling tower. The CDR facility requires a significant amount of cooling water for flue gas cooling, water wash cooling, absorber intercooling, reflux condenser duty, reclaimer cooling, the lean solvent cooler, and CO_2 compression interstage cooling. The cooling water requirements for the CDR facility range from 246 m^3/min (65,000 gpm) to 1,314 m^3/min (347,000 gpm).

CO_2 Absorption

The cooled flue gas enters the bottom of the CO_2 Absorber and flows up through the tower countercurrent to a stream of lean MEA-based solvent (Econamine FG Plus^{SM}). Depending on the case, 90 to 99 percent of the CO_2 in the feed gas is absorbed into the lean solvent, and the rest leaves the top of the absorber section and flows into the water wash section of the tower. The lean solvent enters the top of the absorber, absorbs the CO_2 from the flue gases, and leaves the bottom of the absorber with the absorbed CO_2.

Water Wash Section

The purpose of the Water Wash section is to minimize solvent losses due to mechanical entrainment and evaporation. The flue gas from the top of the CO_2 Absorption section is contacted with a recirculating stream of water for the removal of most of the lean solvent. The scrubbed gases, along with unrecovered solvent, exit the top of the wash section for discharge to the atmosphere via the vent stack. The water stream from the bottom of the wash section is collected on a chimney tray. A portion of the water collected on the chimney tray spills over to the absorber section as water makeup for the amine with the remainder pumped via the Wash Water Pump and cooled by the Wash Water Cooler, and recirculated to the top of the CO_2 Absorber. The wash water level is maintained by water makeup from the Wash Water Makeup Pump.

Exhibit 3-3 Fluor Econamine FG Plus^{SM} Typical Flow Diagram

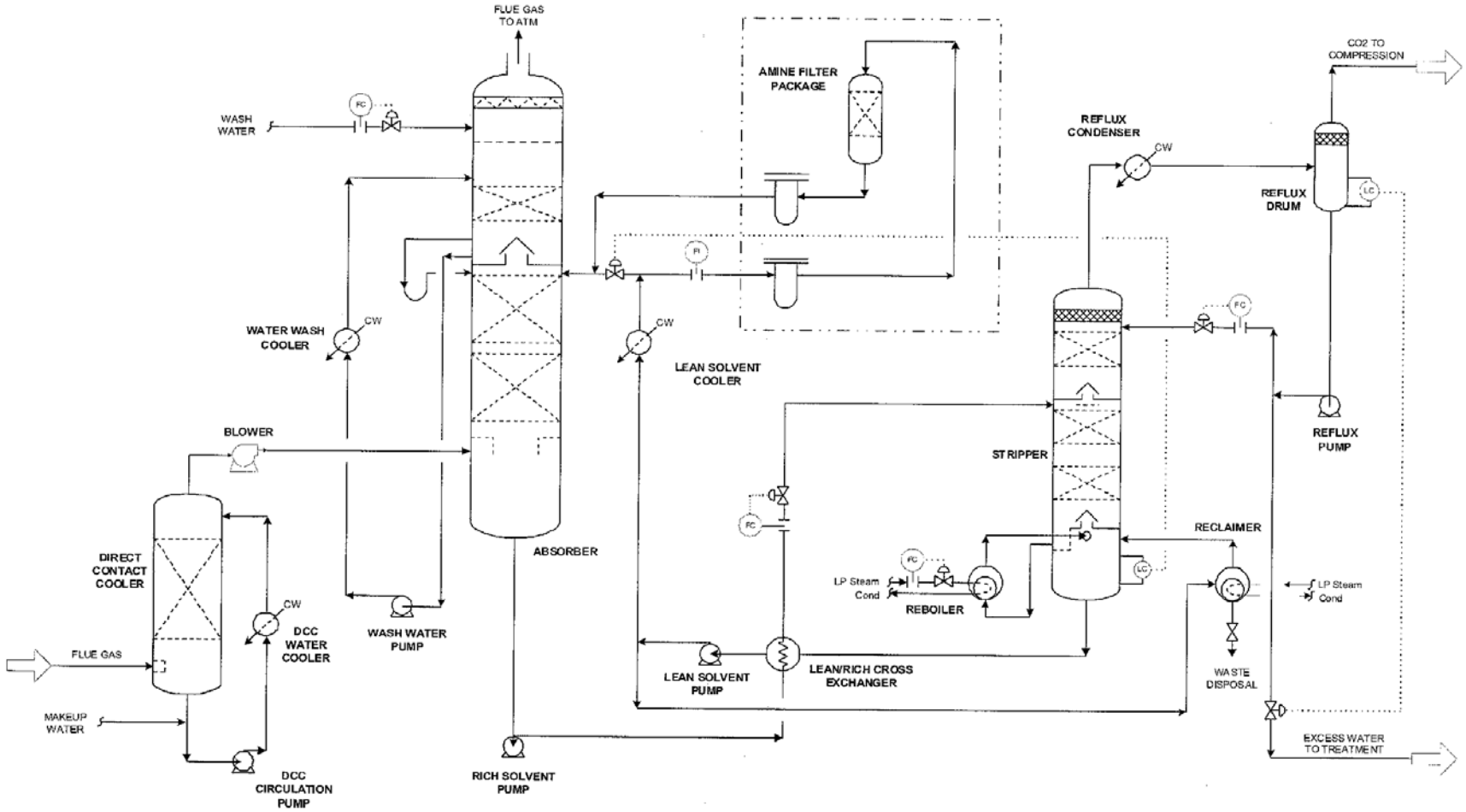

Rich/Lean Amine Heat Exchange System

The rich solvent from the bottom of the CO_2 Absorber is preheated by the lean solvent from the Solvent Stripper in the Rich Lean Solvent Exchanger. The heated rich solvent is routed to the Solvent Stripper for removal of the absorbed CO_2. The stripped solvent from the bottom of the Solvent Stripper is pumped via the Hot Lean Solvent Pumps through the Rich Lean Exchanger to the Solvent Surge Tank. Prior to entering the Solvent Surge Tank, a slipstream of the lean solvent is pumped via the Solvent Filter Feed Pump through the Solvent Filter Package to prevent buildup of contaminants in the solution. From the Solvent Surge Tank the lean solvent is pumped via the Warm Lean Solvent Pumps to the Lean Solvent Cooler for further cooling, after which the cooled lean solvent is returned to the CO_2 Absorber, completing the circulating solvent circuit.

Solvent Stripper

The purpose of the Solvent Stripper is to separate the CO_2 from the rich solvent feed exiting the bottom of the CO_2 Absorber. The rich solvent is collected on a chimney tray below the bottom packed section of the Solvent Stripper and routed to the Solvent Stripper Reboilers where the rich solvent is heated by steam, stripping the CO_2 from the solution. Steam is provided from the LP section of the steam turbine at 0.51 MPa (74 psia) and 292 °C (557 °F). The hot wet vapor from the top of the stripper containing CO_2, steam, and solvent vapor, is partially condensed in the Solvent Stripper Condenser by cross exchanging the hot wet vapor with cooling water. The partially condensed stream then flows to the Solvent Stripper Reflux Drum where the vapor and liquid are separated. The uncondensed CO_2-rich gas is then delivered to the CO_2 product compressor. The condensed liquid from the Solvent Stripper Reflux Drum is pumped via the Solvent Stripper Reflux Pumps where a portion of condensed overhead liquid is used as make-up water for the Water Wash section of the CO_2 Absorber. The rest of the pumped liquid is routed back to the Solvent Stripper as reflux, which aids in limiting the amount of solvent vapors entering the stripper overhead system.

Solvent Stripper Reclaimer

A small slipstream of the lean solvent from the Solvent Stripper bottoms is fed to the Solvent Stripper Reclaimer for the removal of high-boiling nonvolatile impurities (heat stable salts - HSS), volatile acids and iron products from the circulating solvent solution. The solvent bound in the HSS is recovered by reaction with caustic and heating with steam. The solvent reclaimer system reduces corrosion, foaming and fouling in the solvent system. The reclaimed solvent is returned to the Solvent Stripper and the spent solvent is pumped via the Solvent Reclaimer Drain Pump to the Solvent Reclaimer Drain Tank.

Steam Condensate

Steam condensate from the Solvent Stripper Reclaimer accumulates in the Solvent Reclaimer Condensate Drum and is level controlled to the Solvent Reboiler Condensate Drum. Steam condensate from the Solvent Stripper Reboilers is also collected in the Solvent Reboiler

Condensate Drum and returned to the steam cycle between boiler feedwater heaters 4 and 5 via the Solvent Reboiler Condensate Pumps.

Corrosion Inhibitor System

A proprietary corrosion inhibitor is continuously injected into the CO_2 Absorber rich solvent bottoms outlet line, the Solvent Stripper bottoms outlet line and the Solvent Stripper top tray. This constant injection is to help control the rate of corrosion throughout the CO_2 recovery plant system.

Gas Compression and Drying System

In the compression section, the CO_2 is compressed to 15.3 MPa (2,215 psia) by a six-stage centrifugal compressor. The discharge pressures of the stages were balanced to give reasonable power distribution and discharge temperatures across the various stages as shown in Exhibit 3-4.

Exhibit 3-4 CO_2 Compressor Interstage Pressures

Stage	Outlet Pressure, MPa (psia)
1	0.35 (51)
2	0.77 (112)
3	1.69 (245)
4	3.71 (538)
5	8.16 (1,184)
6	15.3 (2,215)

Power consumption for this large compressor was estimated assuming a polytropic efficiency of 86 percent and mechanical efficiency of 98 percent. During compression to 15.3 MPa (2,215 psia) in the multiple-stage, intercooled compressor, the CO_2 stream is dehydrated to a dewpoint of -40 ºC (-40 °F) with triethylene glycol. The virtually moisture-free supercritical CO_2 stream is delivered to the plant battery limit as sequestration-ready. CO_2 TS&M costs were estimated and included in COE using the methodology described in Section 2.7.

3.1.8 Steam Turbine Generator System

The steam turbine is a tandem compound type, consisting of HP-IP-two LP (double flow) sections enclosed in three casings, designed for condensing single reheat operation, and equipped with non-automatic extractions and four-flow exhaust. The turbine drives a hydrogen-cooled generator. The turbine has DC motor-operated lube oil pumps, and main lube oil pumps, which

are driven off the turbine shaft [40]. The exhaust pressure is 35.6 cm (1.4 in) Hg in the single pressure condenser. The condenser is two-shell, transverse, single pressure with divided waterbox for each shell. The steam turbine is designed for long-term operation (90 days or more) at MCR with throttle control valves 95 percent open. It is also capable of a short-term 5 percent OP/VWO condition (16 hours).

Turbine bearings are lubricated by a closed-loop, water-cooled pressurized oil system. Turbine shafts are sealed against air in-leakage or steam blowout using a labyrinth gland arrangement connected to a low-pressure steam seal system. The generator stator is cooled with a closed-loop water system consisting of circulating pumps, shell and tube or plate and frame type heat exchangers, filters, and deionizers, all skid-mounted. The generator rotor is cooled with a hydrogen gas recirculation system using fans mounted on the generator rotor shaft.

Operation Description – The turbine stop valves, control valves, reheat stop valves, and intercept valves are controlled by an electro-hydraulic control system. Main steam from the boiler passes through the stop valves and control valves and enters the turbine at 24.1 MPa/593 °C (3,500 psig/1,100 °F). The steam initially enters the turbine near the middle of the high-pressure span, flows through the turbine, and returns to the boiler for reheating. The reheat steam flows through the reheat stop valves and intercept valves and enters the IP section at 593 °C (1,100 °F). After passing through the IP section, the steam enters a crossover pipe, which transports the steam to the two LP sections. The steam divides into four paths and flows through the LP sections exhausting downward into the condenser.

The turbine is designed to operate at constant inlet steam pressure over the entire load range.

3.1.8.1 Supercritical Steam Turbine Cycle

The supercritical steam turbine is equipped with six non-automatic steam extractions, which along with the HP and IP section exhausts provide steam for four low pressure feedwater heaters, deaerator, and three high pressure feedwater heaters. All feedwater heaters (except the deaerator) are closed type. The condensate drains from the low pressure heater (#1 through #4) are cascaded to the condenser. The condensate drains from the high pressure heaters (#6 through #8) are cascaded to the deaerator. The deaerator storage tank provides suction to the boiler feedwater pumps. The deaerator is assumed to be placed at high elevation to assure sufficient Net Positive Suction Head (NPSH) for the feedwater pumps. Heater #7 is on cold reheat extraction and heater #8 is a heater above the reheat point (HARP).

3.1.9 Balance of Plant

The balance of plant components consist of the condensate, feedwater, main and reheat steam, extraction steam, ash handling, ducting and stack, waste treatment and miscellaneous systems as described below.

3.1.9.1 Condensate

The function of the condensate system is to pump condensate from the condenser hotwell to the deaerator, through the gland steam condenser and through the LP feedwater heaters. Each

system consists of one main condenser; one variable speed electric motor-driven vertical condensate pump with a 100 percent in-line spare; one gland steam condenser; four LP heaters; and one deaerator with storage tank.

Condensate is delivered to a common discharge header through two separate pump discharge lines, each with a check valve and a gate valve. A common minimum flow recirculation line discharging to the condenser is provided downstream of the gland steam condenser to maintain minimum flow requirements for the gland steam condenser and the condensate pumps.

LP feedwater heaters 1 through 4 are 50 percent capacity, parallel flow, and are located in the condenser neck. All remaining feedwater heaters are 100 percent capacity shell and U-tube heat exchangers. Each LP feedwater heater is provided with inlet/outlet isolation valves and a full capacity bypass. LP feedwater heater drains cascade down to the next lowest extraction pressure heater and finally discharge into the condenser. Pneumatic level control valves control normal drain levels in the heaters. High heater level dump lines discharging to the condenser are provided for each heater for turbine water induction protection. Pneumatic level control valves control dump line flow.

3.1.9.2 Feedwater

The function of the feedwater system is to pump the feedwater from the deaerator storage tank(s) through the HP feedwater heaters to the economizer. The SC plants have a single deaerator and use one turbine-driven boiler feedwater pump sized at 100 percent capacity (with a 100 percent spare) to pump feedwater through the HP feedwater heaters. One 25 percent motor-driven boiler feedwater pump for each application is provided for startup. The pumps are provided with inlet and outlet isolation valves, and individual minimum flow recirculation lines discharging back to the deaerator storage tank. The recirculation flow is controlled by automatic recirculation valves, which are a combination check valve in the main line and in the bypass, bypass control valve, and flow sensing element. The suction of the boiler feed pump is equipped with startup strainers, which are utilized during initial startup and following major outages or system maintenance.

Each HP feedwater heater is provided with inlet/outlet isolation valves and a full capacity bypass. Feedwater heater drains cascade down to the next lowest extraction pressure heater and finally discharge into the deaerator. Pneumatic level control valves control normal drain level in the heaters. High heater level dump lines discharging to the condenser are provided for each heater for turbine water induction protection. Dump line flow is controlled by pneumatic level control valves.

The deaerator is a horizontal, spray tray type with internal direct contact stainless steel vent condenser and storage tank. The boiler feed pump turbine is driven by main steam up to 60 percent plant load. Above 60 percent load, extraction from the IP turbine exhaust provides steam to the boiler feed pump steam turbine.

3.1.9.3 Main and Reheat Steam

The function of the main steam system is to convey main steam from the boiler superheater outlet to the HP turbine stop valves. The function of the reheat system is to convey steam from

the HP turbine exhaust to the boiler reheater and from the boiler reheater outlet to the IP turbine stop valves.

Main steam exits the boiler superheater through a motor-operated stop/check valve and a motor-operated gate valve and is routed in a single line feeding the HP turbine. A branch line off the IP turbine exhaust feeds the boiler feed water pump turbine during unit operation starting at approximately 60 percent load.

Cold reheat steam exits the HP turbine, flows through a motor-operated isolation gate valve and a flow control valve, and enters the boiler reheater. Hot reheat steam exits the boiler reheater through a motor-operated gate valve and is routed to the IP turbine.

3.1.9.4 Extraction Steam

The function of the extraction steam system is to convey steam from turbine extraction points to the feedwater heaters, deaerator, and CDR facility.

The turbine is protected from overspeed on turbine trip, from flash steam reverse flow from the heaters through the extraction piping to the turbine. This protection is provided by positive closing, balanced disc non-return valves located in all extraction lines except the lines to the LP feedwater heaters in the condenser neck. The extraction non-return valves are located only in horizontal runs of piping and as close to the turbine as possible.

The turbine trip signal automatically trips the non-return valves through relay dumps. The remote manual control for each heater level control system is used to release the non-return valves to normal check valve service when required to restart the system.

3.1.9.5 Circulating Water System

It is assumed that the plant is serviced by a public water facility and has access to groundwater for use as makeup cooling water with minimal pretreatment. All filtration and treatment of the circulating water are conducted on site. A mechanical draft, counter-flow cooling tower is provided for the circulating water heat sink. Two 50 percent circulating water pumps are provided. The circulating water system provides cooling water to the condenser, the CDR facility, and the auxiliary cooling water system.

The auxiliary cooling water system is a closed-loop system. Plate and frame heat exchangers with circulating water as the cooling medium are provided. This system provides cooling water to the lube oil coolers, turbine generator, boiler feed pumps, etc. All pumps, vacuum breakers, air release valves, instruments, controls, etc. are included for a complete operable system.

3.1.9.6 Ash Handling System

The function of the ash handling system is to provide the equipment required for conveying, preparing, storing, and disposing of the fly ash and bottom ash produced on a daily basis by the boiler. The scope of the system is from the bag house hoppers, air heater hopper collectors, and bottom ash hoppers to the hydrobins (for bottom ash) and truck filling stations (for fly ash). The

system is designed to support short-term operation at the 5 percent OP/VWO condition (16 hours) and long-term operation at the 100 percent guarantee point (90 days or more).

The fly ash collected in the bag house and in the air heaters is conveyed to the fly ash storage silo. A pneumatic transport system using low-pressure air from a blower provides the transport mechanism for the fly ash. Fly ash is discharged through a wet unloader, which conditions the fly ash and conveys it through a telescopic unloading chute into a truck for disposal.

The bottom ash from the boiler is fed into a clinker grinder. The clinker grinder is provided to break up any clinkers that may form. From the clinker grinders the bottom ash is sluiced to hydrobins for dewatering and offsite removal by truck.

Ash from the economizer hoppers and pyrites (rejected from the coal pulverizers) is conveyed by hydraulic means (water) to the economizer/pyrites transfer tank. This material is then sluiced, on a periodic basis, to the hydrobins.

3.1.9.7 Ducting and Stack

One stack is provided with a single fiberglass-reinforced plastic (FRP) liner. The stack is constructed of reinforced concrete. The stack is 152 m (500 ft) high for adequate particulate dispersion. The ID fans were sized large enough to allow for additional stack velocity to overcome the buoyancy losses resulting from colder than normal flue gas temperatures following CO_2 capture.

3.1.9.8 Waste Treatment/Miscellaneous Systems

An onsite water treatment facility treats all runoff, cleaning wastes, blowdown, and backwash to within the U.S. EPA standards for suspended solids, oil and grease, pH, and miscellaneous metals. Waste treatment equipment is housed in a separate building. The waste treatment system consists of a water collection basin, three raw waste pumps, an acid neutralization system, an oxidation system, flocculation, clarification/thickening, and sludge dewatering. The water collection basin is a synthetic-membrane-lined earthen basin, which collects rainfall runoff, maintenance cleaning wastes, and backwash flows.

The raw waste is pumped to the treatment system at a controlled rate by the raw waste pumps. The neutralization system neutralizes the acidic wastewater with hydrated lime in a two-stage system, consisting of a lime storage silo/lime slurry makeup system, dry lime feeder, lime slurry tank, slurry tank mixer, and lime slurry feed pumps.

The oxidation system consists of an air compressor, which injects air through a sparger pipe into the second-stage neutralization tank. The flocculation tank is fiberglass with a variable speed agitator. A polymer dilution and feed system is also provided for flocculation. The clarifier is a plate-type, with the sludge pumped to the dewatering system. The sludge is dewatered in filter presses and disposed offsite. Trucking and disposal costs are included in the cost estimate. The filtrate from the sludge dewatering is returned to the raw waste sump.

Miscellaneous systems consisting of fuel oil, service air, instrument air, and service water are provided. A storage tank provides a supply of No. 2 fuel oil used for startup and for a small

auxiliary boiler. Fuel oil is delivered by truck. All truck roadways and unloading stations inside the fence area are provided.

3.1.9.9 Buildings and Structures

Foundations are provided for the support structures, pumps, tanks, and other plant components. The following buildings are included in the design basis:

- Steam turbine building
- Boiler building
- Administration and service building
- Makeup water and pretreatment building
- Fuel oil pump house
- Coal crusher building
- Continuous emissions monitoring building
- Pump house and electrical equipment building
- Guard house
- Runoff water pump house
- Industrial waste treatment building
- FGD system buildings

3.1.10 Accessory Electric Plant

The accessory electric plant consists of switchgear and control equipment, generator equipment, station service equipment, conduit and cable trays, and wire and cable. It also includes the main power transformer, required foundations, and standby equipment.

3.1.11 Instrumentation and Control

An integrated plant-wide control and monitoring distributed control system (DCS) is provided. The DCS is a redundant microprocessor-based, functionally distributed system. The control room houses an array of multiple video monitor and keyboard units. The monitor/keyboard units are the primary interface between the generating process and operations personnel. The DCS incorporates plant monitoring and control functions for all the major plant equipment. The DCS is designed to provide 99.5 percent availability. The plant equipment and the DCS are designed for automatic response to load changes from minimum load to 100 percent. Startup and shutdown routines are implemented as supervised manual, with operator selection of modular automation routines available.

3.2 Supercritical PC CO_2 Capture Sensitivity

The evaluation scope included developing heat and mass balances and estimating plant performance on a common 550 MWe net output basis while firing bituminous Illinois No. 6 coal. Equipment lists were developed for each design to support plant capital and operating costs estimates.

The SC PC plants are assumed to be built on a "greenfield" site and utilize recirculating evaporative cooling systems for cycle heat rejection. Major systems for each plant (described in Section 3.1) include:

1. Steam Generator
2. Steam Turbine/Generator
3. Particulate control system
4. FGD system
5. SCR system
6. CO_2 Recovery
7. Balance of Plant

Support facilities include coal handling (receiving, crushing, and storing), limestone handling (including receiving, crushing, storing, and feeding), solid waste disposal, circulating water system with evaporative mechanical draft cooling towers, wastewater treatment, and other ancillary systems equipment necessary for an efficient, highly available, and completely operable facility.

The plant designs are based on using components suitable for a 30-year life, with provision for periodic maintenance and replacement of critical parts. All equipment is based on compliance with the latest applicable codes and standards. ASME, ANSI, IEEE, NFPA, CAA, state regulations, and OSHA codes are all adhered to in the design approach.

The modeling assumptions that were used to generate the SC PC material and energy balances are summarized in Exhibit 3-5.

Exhibit 3-5 Supercritical PC Combustion Configuration Modeling Assumptions

	Case 1A	Case 1B	Case 1C	Case 1D	Case 1E	Case 1F	Case 1G
Throttle pressure, psig	3500	3500	3500	3500	3500	3500	3500
Throttle temperature, ºF	1100	1100	1100	1100	1100	1100	1100
Reheat temperature, ºF	1100	1100	1100	1100	1100	1100	1100
Condenser pressure, psia	0.98	0.98	0.98	0.98	0.98	0.98	0.98
Cooling water to condenser, ºF	60	60	60	60	60	60	60
Cooling water from condenser, ºF	80	80	80	80	80	80	80
Stack temperature	saturation	saturation	saturation	saturation	saturation	saturation	saturation
Coal HHV (Illinois No. 6), Btu/lb	11,666	11,666	11,666	11,666	11,666	11,666	11,666
FGD efficiency	98%	98%	98%	98%	98%	98%	98%
SOx emissions, lb/MMBtu	0.1	0.1	0.1	0.1	0.1	0.1	0.1
SCR efficiency	86%	86%	86%	86%	86%	86%	86%
NOx emissions, lb/MMBtu	0.07	0.07	0.07	0.07	0.07	0.07	0.07
Ammonia slip (end of catalyst life), ppm	2	2	2	2	2	2	2
Baghouse efficiency	99.8%	99.8%	99.8%	99.8%	99.8%	99.8%	99.8%
Particulate emissions PM/PM_{10}, lb/MMBtu	0.015	0.015	0.015	0.015	0.015	0.015	0.015
Mercury removal, %	90	90	90	90	90	90	90
CO_2 Capture Efficiency*, %	30	50	70	85	90	95	99
Product CO_2 Condition, psia/°F	2215/95	2215/95	2215/95	2215/95	2215/95	2215/95	2215/95

* Percentage of CO_2 removed from flue gas

3.2.1 CO_2 Capture with Partial Bypass Performance Results

A process block flow diagram for Cases 1A through 1D is shown in Exhibit 3-6. These cases represent supercritical steam cycles with CO_2 capture ranging from 30 to 85 percent. The corresponding stream tables are contained in Exhibit 3-7, Exhibit 3-8, Exhibit 3-9, and Exhibit 3-10 for 30, 50, 70, and 85 percent CO_2 capture, respectively. A series of CO_2 capture levels was developed by varying the volume of flue gas that bypasses the Econamine FG Plus® system via Stream 18. Further, the MEA solvent circulation rate and reboiler steam flow rate were adjusted to account for the volume of flue gas treated.

A literature search was conducted to verify that <90 percent CO_2 capture is most economical using a slip-stream (or bypass) approach. Indeed, the 'slip-stream' approach is more cost-effective for <90 percent CO_2 capture than removing reduced CO_2 fractions from the entire flue gas stream, according to multiple peer-reviewed studies [1, 2, 3]. The cost of CO_2 capture with the Econamine FG Plus℠ process is dependent on the volume of gas being treated and a reduction in flue gas flow rate will (1) decrease the quantity of energy consumed by flue gas blowers; (2) reduce the size of the CO_2 absorption columns; (3) trim the cooling water requirement of the direct contact cooling system; and (4) decrease the amount of fan power required to increase the flue gas temperature and plume buoyancy. As a result, the slip-stream approach for <90 percent CO_2 capture leads to lower capital and operating costs.

Overall performance for Cases 1A through 1D is summarized in Exhibit 3-11 which includes auxiliary power requirements.

Material and energy balance information, environmental performance and a major equipment list are summarized in Sections 3.2.1.1 and 3.2.1.2.

Exhibit 3-6 Cases 1A Through 1D Process Block Flow Diagram, Supercritical PC with CO_2 Capture Bypass

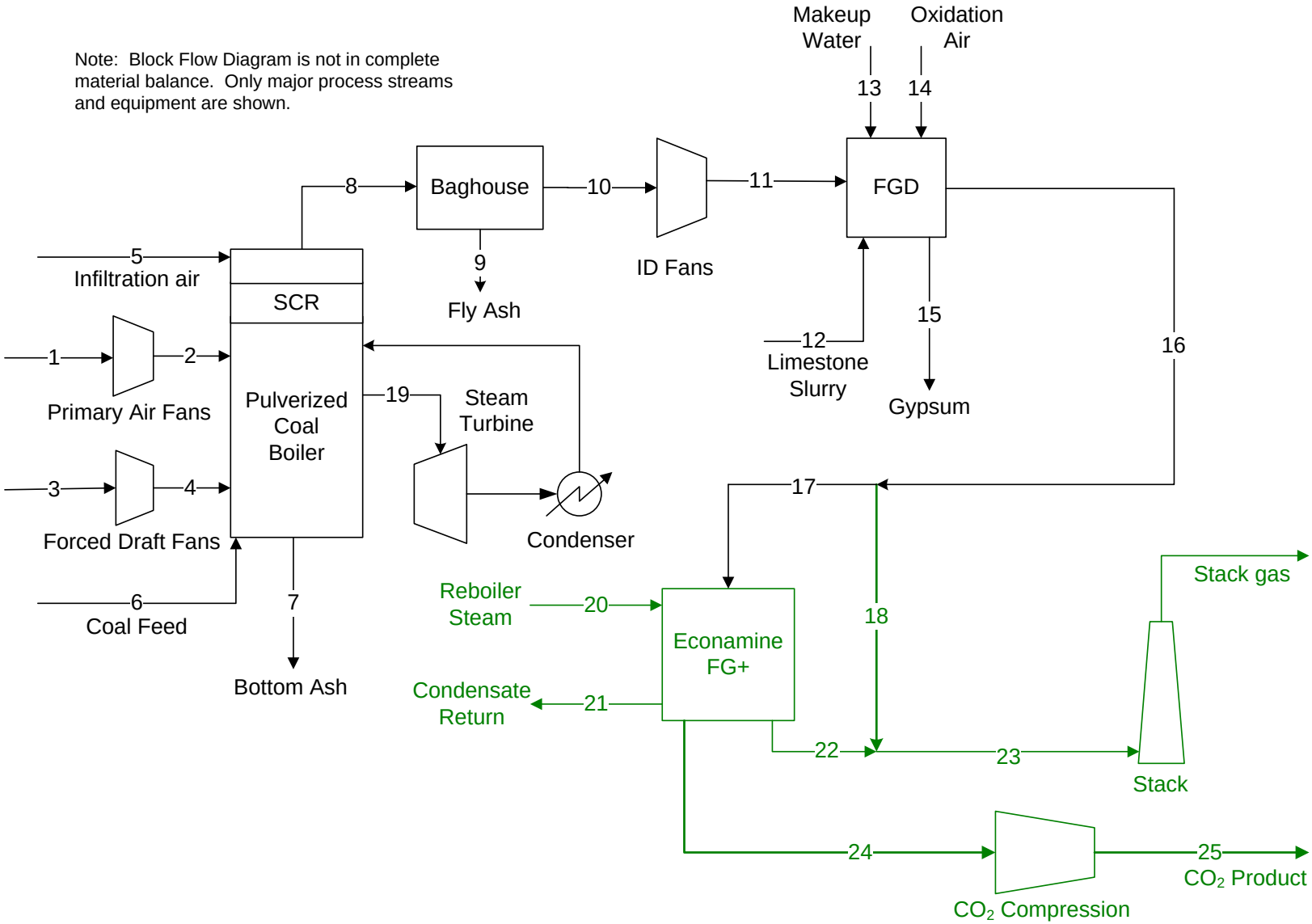

Exhibit 3-7 Case 1A Stream Table, Supercritical PC with 30% CO_2 Capture

	1	2	3	4	5	6	7	8	9	10	11	12	13
V-L Mole Fraction													
Ar	0.0092	0.0092	0.0092	0.0092	0.0092	0.0000	0.0000	0.0087	0.0000	0.0087	0.0087	0.0000	0.0000
CO_2	0.0003	0.0003	0.0003	0.0003	0.0003	0.0000	0.0000	0.1450	0.0000	0.1450	0.1450	0.0000	0.0000
H_2	0.0000	0.0000	0.0000	0.0000	0.0000	0.0000	0.0000	0.0000	0.0000	0.0000	0.0000	0.0000	0.0000
H_2O	0.0099	0.0099	0.0099	0.0099	0.0099	0.0000	0.0000	0.0870	0.0000	0.0870	0.0870	1.0000	1.0000
N_2	0.7732	0.7732	0.7732	0.7732	0.7732	0.0000	0.0000	0.7324	0.0000	0.7324	0.7324	0.0000	0.0000
O_2	0.2074	0.2074	0.2074	0.2074	0.2074	0.0000	0.0000	0.0247	0.0000	0.0247	0.0247	0.0000	0.0000
SO_2	0.0000	0.0000	0.0000	0.0000	0.0000	0.0000	0.0000	0.0021	0.0000	0.0021	0.0021	0.0000	0.0000
Total	1.0000	1.0000	1.0000	1.0000	1.0000	0.0000	0.0000	1.0000	0.0000	1.0000	1.0000	1.0000	1.0000
V-L Flowrate (kg_{mol}/hr)	53,907	53,907	16,560	16,560	1,409	0	0	76,029	0	76,029	76,029	2,778	10,986
V-L Flowrate (kg/hr)	1,555,598	1,555,598	477,863	477,863	40,669	0	0	2,261,348	0	2,261,348	2,261,348	50,048	197,909
Solids Flowrate (kg/hr)	0	0	0	0	0	207,322	4,021	16,083	16,083	0	0	20,977	0
Temperature (°C)	15	19	15	25	15	15	15	177	15	177	188	15	15
Pressure (MPa, abs)	0.10	0.11	0.10	0.11	0.10	0.10	0.10	0.10	0.10	0.10	0.11	0.10	0.10
Enthalpy (kJ/kg)[A]	30.23	34.36	30.23	40.78	30.23	---	---	335.07	---	316.66	328.98	---	62.80
Density (kg/m^3)	1.2	1.3	1.2	1.3	1.2	---	---	0.8	---	0.8	0.8	---	1,003.1
V-L Molecular Weight	28.857	28.857	28.857	28.857	28.857	---	---	29.743	---	29.743	29.743	---	18.015
V-L Flowrate (lb_{mol}/hr)	118,845	118,845	36,508	36,508	3,107	0	0	167,616	0	167,616	167,616	6,125	24,219
V-L Flowrate (lb/hr)	3,429,506	3,429,506	1,053,508	1,053,508	89,660	0	0	4,985,419	0	4,985,419	4,985,419	110,337	436,316
Solids Flowrate (lb/hr)	0	0	0	0	0	457,066	8,864	35,457	35,457	0	0	46,247	0
Temperature (°F)	59	66	59	78	59	59	59	350	59	350	371	59	59
Pressure (psia)	14.7	15.3	14.7	16.1	14.7	14.7	14.7	14.4	14.7	14.2	15.3	15.0	14.7
Enthalpy (Btu/lb)[A]	13.0	14.8	13.0	17.5	13.0	---	---	144.1	---	136.1	141.4	---	27.0
Density (lb/ft^3)	0.076	0.078	0.076	0.081	0.076	---	---	0.049	---	0.049	0.051	---	62.622

A - Reference conditions are 32.02 F & 0.089 PSIA

Exhibit 3-7 Case 1A Stream Table, Supercritical PC with 30% CO2 Capture (continued)

	14	15	16	17	18	19	20	21	22	23	24	25
V-L Mole Fraction												
Ar	0.0092	0.0000	0.0081	0.0081	0.0081	0.0000	0.0000	0.0000	0.0092	0.0089	0.0000	0.0000
CO_2	0.0003	0.0004	0.1347	0.1347	0.1347	0.0000	0.0000	0.0000	0.0161	0.1033	0.9873	1.0000
H_2	0.0000	0.0000	0.0000	0.0000	0.0000	0.0000	0.0000	0.0000	0.0000	0.0000	0.0000	0.0000
H_2O	0.0099	0.9996	0.1549	0.1549	0.1549	1.0000	1.0000	1.0000	0.1747	0.1204	0.0127	0.0000
N_2	0.7732	0.0000	0.6785	0.6785	0.6785	0.0000	0.0000	0.0000	0.7728	0.7414	0.0000	0.0000
O_2	0.2074	0.0000	0.0238	0.0238	0.0238	0.0000	0.0000	0.0000	0.0271	0.0260	0.0000	0.0000
SO_2	0.0000	0.0000	0.0000	0.0000	0.0000	0.0000	0.0000	0.0000	0.0000	0.0000	0.0000	0.0000
Total	1.0000	1.0000	1.0000	1.0000	1.0000	1.0000	1.0000	1.0000	1.0000	1.0000	1.0000	1.0000
V-L Flowrate (kg_{mol}/hr)	859	198	83,056	27,658	55,398	101,180	11,731	11,731	24,280	76,004	3,377	3,334
V-L Flowrate (kg/hr)	24,798	3,570	2,392,952	796,853	1,596,099	1,822,780	211,342	211,342	649,315	2,179,226	147,486	146,714
Solids Flowrate (kg/hr)	0	32,425	0	0	0	0	0	0	0	0	0	0
Temperature (°C)	18	58	58	58	58	593	291	151	32	53	21	35
Pressure (MPa, abs)	0.10	0.10	0.10	0.10	0.10	24.23	0.51	0.92	0.10	0.10	0.16	15.27
Enthalpy (kJ/kg)[A]	32.81	---	303.64	303.64	303.64	3,477.66	3,046.14	637.34	87.35	244.64	28.22	-212.35
Density (kg/m^3)	1.2	---	1.1	1.1	1.1	69.2	2.0	916.0	1.3	1.1	2.9	794.3
V-L Molecular Weight	28.857	---	28.811	28.811	28.811	18.015	18.015	18.015	26.743	28.672	43.680	44.010
V-L Flowrate (lb_{mol}/hr)	1,895	437	183,107	60,975	122,132	223,063	25,863	25,863	53,529	167,561	7,444	7,349
V-L Flowrate (lb/hr)	54,671	7,870	5,275,555	1,756,760	3,518,795	4,018,542	465,930	465,930	1,431,495	4,804,370	325,150	323,448
Solids Flowrate (lb/hr)	0	71,485	0	0	0	0	0	0	0	0	0	0
Temperature (°F)	64	136	136	136	136	1,100	556	304	89	127	69	95
Pressure (psia)	15.0	14.8	14.8	14.8	14.8	3,514.7	73.5	133.6	14.8	14.8	23.5	2,214.5
Enthalpy (Btu/lb)[A]	14.1	---	130.5	130.5	130.5	1,495.1	1,309.6	274.0	37.6	105.2	12.1	-91.3
Density (lb/ft^3)	0.077	---	0.067	0.067	0.067	4.319	0.123	57.184	0.078	0.067	0.183	49.586

A - Reference conditions are 32.02 F & 0.089 PSIA

Exhibit 3-8 Case 1B Stream Table, Supercritical PC with 50% CO_2 Capture

	1	2	3	4	5	6	7	8	9	10	11	12	13
V-L Mole Fraction													
Ar	0.0092	0.0092	0.0092	0.0092	0.0092	0.0000	0.0000	0.0087	0.0000	0.0087	0.0087	0.0000	0.0000
CO_2	0.0003	0.0003	0.0003	0.0003	0.0003	0.0000	0.0000	0.1450	0.0000	0.1450	0.1450	0.0000	0.0000
H_2	0.0000	0.0000	0.0000	0.0000	0.0000	0.0000	0.0000	0.0000	0.0000	0.0000	0.0000	0.0000	0.0000
H_2O	0.0099	0.0099	0.0099	0.0099	0.0099	0.0000	0.0000	0.0870	0.0000	0.0870	0.0870	1.0000	1.0000
N_2	0.7732	0.7732	0.7732	0.7732	0.7732	0.0000	0.0000	0.7324	0.0000	0.7324	0.7324	0.0000	0.0000
O_2	0.2074	0.2074	0.2074	0.2074	0.2074	0.0000	0.0000	0.0247	0.0000	0.0247	0.0247	0.0000	0.0000
SO_2	0.0000	0.0000	0.0000	0.0000	0.0000	0.0000	0.0000	0.0021	0.0000	0.0021	0.0021	0.0000	0.0000
Total	1.0000	1.0000	1.0000	1.0000	1.0000	0.0000	0.0000	1.0000	0.0000	1.0000	1.0000	1.0000	1.0000
V-L Flowrate (kg_{mol}/hr)	57,711	57,711	17,728	17,728	1,509	0	0	81,394	0	81,394	81,394	2,958	11,774
V-L Flowrate (kg/hr)	1,665,360	1,665,360	511,581	511,581	43,539	0	0	2,420,907	0	2,420,907	2,420,907	53,296	212,114
Solids Flowrate (kg/hr)	0	0	0	0	0	221,950	4,304	17,218	17,218	0	0	22,456	0
Temperature (°C)	15	19	15	25	15	15	15	177	15	177	188	15	15
Pressure (MPa, abs)	0.10	0.11	0.10	0.11	0.10	0.10	0.10	0.10	0.10	0.10	0.11	0.10	0.10
Enthalpy (kJ/kg)[A]	30.23	34.36	30.23	40.78	30.23	---	---	335.07	---	316.66	328.98	---	62.80
Density (kg/m^3)	1.2	1.3	1.2	1.3	1.2	---	---	0.8	---	0.8	0.8	---	1,003.1
V-L Molecular Weight	28.857	28.857	28.857	28.857	28.857	---	---	29.743	---	29.743	29.743	---	18.015
V-L Flowrate (lb_{mol}/hr)	127,231	127,231	39,084	39,084	3,326	0	0	179,443	0	179,443	179,443	6,522	25,958
V-L Flowrate (lb/hr)	3,671,489	3,671,489	1,127,843	1,127,843	95,987	0	0	5,337,187	0	5,337,187	5,337,187	117,497	467,632
Solids Flowrate (lb/hr)	0	0	0	0	0	489,316	9,490	37,958	37,958	0	0	49,508	0
Temperature (°F)	59	66	59	78	59	59	59	350	59	350	371	59	59
Pressure (psia)	14.7	15.3	14.7	16.1	14.7	14.7	14.7	14.4	14.7	14.2	15.3	15.0	14.7
Enthalpy (Btu/lb)[A]	13.0	14.8	13.0	17.5	13.0	---	---	144.1	---	136.1	141.4	---	27.0
Density (lb/ft^3)	0.076	0.078	0.076	0.081	0.076	---	---	0.049	---	0.049	0.051	---	62.622

A - Reference conditions are 32.02 F & 0.089 PSIA

Exhibit 3-8 Case 1B Stream Table, Supercritical PC with 50% CO2 Capture (continued)

	14	15	16	17	18	19	20	21	22	23	24	25
V-L Mole Fraction												
Ar	0.0092	0.0000	0.0081	0.0081	0.0081	0.0000	0.0000	0.0000	0.0092	0.0094	0.0000	0.0000
CO_2	0.0003	0.0004	0.1347	0.1347	0.1347	0.0000	0.0000	0.0000	0.0154	0.0784	0.9874	1.0000
H_2	0.0000	0.0000	0.0000	0.0000	0.0000	0.0000	0.0000	0.0000	0.0000	0.0000	0.0000	0.0000
H_2O	0.0099	0.9996	0.1550	0.1550	0.1550	1.0000	1.0000	1.0000	0.1749	0.0946	0.0126	0.0000
N_2	0.7732	0.0000	0.6785	0.6785	0.6785	0.0000	0.0000	0.0000	0.7734	0.7900	0.0000	0.0000
O_2	0.2074	0.0000	0.0238	0.0238	0.0238	0.0000	0.0000	0.0000	0.0271	0.0277	0.0000	0.0000
SO_2	0.0000	0.0000	0.0000	0.0000	0.0000	0.0000	0.0000	0.0000	0.0000	0.0000	0.0000	0.0000
Total	1.0000	1.0000	1.0000	1.0000	1.0000	1.0000	1.0000	1.0000	1.0000	1.0000	1.0000	1.0000
V-L Flowrate (kg_{mol}/hr)	907	212	88,902	49,429	39,472	108,299	21,169	21,169	43,359	76,353	6,069	5,992
V-L Flowrate (kg/hr)	26,187	3,829	2,561,398	1,424,137	1,137,261	1,951,032	381,357	381,357	1,158,952	2,179,503	265,093	263,713
Solids Flowrate (kg/hr)	0	34,712	0	0	0	0	0	0	0	0	0	0
Temperature (°C)	18	58	58	58	58	593	291	151	32	48	21	35
Pressure (MPa, abs)	0.10	0.10	0.10	0.10	0.10	24.23	0.51	0.92	0.10	0.10	0.16	15.27
Enthalpy (kJ/kg)[A]	32.81	---	303.63	303.63	303.63	3,477.66	3,046.14	637.34	87.38	199.38	28.23	-212.35
Density (kg/m^3)	1.2	---	1.1	1.1	1.1	69.2	2.0	916.0	1.3	1.1	2.9	794.3
V-L Molecular Weight	28.857	---	28.812	28.812	28.812	18.015	18.015	18.015	26.729	28.545	43.682	44.010
V-L Flowrate (lb_{mol}/hr)	2,001	468	195,994	108,973	87,021	238,758	46,669	46,669	95,590	168,330	13,379	13,210
V-L Flowrate (lb/hr)	57,733	8,443	5,646,915	3,139,685	2,507,230	4,301,289	840,749	840,749	2,555,051	4,804,981	584,429	581,387
Solids Flowrate (lb/hr)	0	76,527	0	0	0	0	0	0	0	0	0	0
Temperature (°F)	64	136	136	136	136	1,100	556	304	89	118	69	95
Pressure (psia)	15.0	14.8	14.8	14.8	14.8	3,514.7	73.5	133.6	14.8	14.8	23.5	2,214.5
Enthalpy (Btu/lb)[A]	14.1	---	130.5	130.5	130.5	1,495.1	1,309.6	274.0	37.6	85.7	12.1	-91.3
Density (lb/ft^3)	0.077	---	0.067	0.067	0.067	4.319	0.123	57.184	0.078	0.068	0.183	49.586

A - Reference conditions are 32.02 F & 0.089 PSIA

Exhibit 3-9 Case 1C Stream Table, Supercritical PC with 70% CO_2 Capture

	1	2	3	4	5	6	7	8	9	10	11	12	13
V-L Mole Fraction													
Ar	0.0092	0.0092	0.0092	0.0092	0.0092	0.0000	0.0000	0.0087	0.0000	0.0087	0.0087	0.0000	0.0000
CO_2	0.0003	0.0003	0.0003	0.0003	0.0003	0.0000	0.0000	0.1450	0.0000	0.1450	0.1450	0.0000	0.0000
H_2	0.0000	0.0000	0.0000	0.0000	0.0000	0.0000	0.0000	0.0000	0.0000	0.0000	0.0000	0.0000	0.0000
H_2O	0.0099	0.0099	0.0099	0.0099	0.0099	0.0000	0.0000	0.0870	0.0000	0.0870	0.0870	1.0000	1.0000
N_2	0.7732	0.7732	0.7732	0.7732	0.7732	0.0000	0.0000	0.7324	0.0000	0.7324	0.7324	0.0000	0.0000
O_2	0.2074	0.2074	0.2074	0.2074	0.2074	0.0000	0.0000	0.0247	0.0000	0.0247	0.0247	0.0000	0.0000
SO_2	0.0000	0.0000	0.0000	0.0000	0.0000	0.0000	0.0000	0.0021	0.0000	0.0021	0.0021	0.0000	0.0000
Total	1.0000	1.0000	1.0000	1.0000	1.0000	0.0000	0.0000	1.0000	0.0000	1.0000	1.0000	1.0000	1.0000
V-L Flowrate (kg_{mol}/hr)	62,010	62,010	19,049	19,049	1,621	0	0	87,457	0	87,457	87,457	3,143	12,662
V-L Flowrate (kg/hr)	1,789,408	1,789,408	549,687	549,687	46,782	0	0	2,601,235	0	2,601,235	2,601,235	56,619	228,115
Solids Flowrate (kg/hr)	0	0	0	0	0	238,483	4,625	18,500	18,500	0	0	24,011	0
Temperature (°C)	15	19	15	25	15	15	15	177	15	177	188	15	15
Pressure (MPa, abs)	0.10	0.11	0.10	0.11	0.10	0.10	0.10	0.10	0.10	0.10	0.11	0.10	0.10
Enthalpy (kJ/kg)[A]	30.23	34.36	30.23	40.78	30.23	---	---	335.07	---	316.66	328.98	---	62.80
Density (kg/m^3)	1.2	1.3	1.2	1.3	1.2	---	---	0.8	---	0.8	0.8	---	1,003.1
V-L Molecular Weight	28.857	28.857	28.857	28.857	28.857	---	---	29.743	---	29.743	29.743	---	18.015
V-L Flowrate (lb_{mol}/hr)	136,708	136,708	41,995	41,995	3,574	0	0	192,809	0	192,809	192,809	6,929	27,916
V-L Flowrate (lb/hr)	3,944,969	3,944,969	1,211,853	1,211,853	103,136	0	0	5,734,741	0	5,734,741	5,734,741	124,823	502,908
Solids Flowrate (lb/hr)	0	0	0	0	0	525,764	10,196	40,786	40,786	0	0	52,935	0
Temperature (°F)	59	66	59	78	59	59	59	350	59	350	371	59	59
Pressure (psia)	14.7	15.3	14.7	16.1	14.7	14.7	14.7	14.4	14.7	14.2	15.3	15.0	14.7
Enthalpy (Btu/lb)[A]	13.0	14.8	13.0	17.5	13.0	---	---	144.1	---	136.1	141.4	---	27.0
Density (lb/ft^3)	0.076	0.078	0.076	0.081	0.076	---	---	0.049	---	0.049	0.051	---	62.622

A - Reference conditions are 32.02 F & 0.089 PSIA

Exhibit 3-9 Case 1C Stream Table, Supercritical PC with 70% CO2 Capture (continued)

	14	15	16	17	18	19	20	21	22	23	24	25
V-L Mole Fraction												
Ar	0.0092	0.0000	0.0081	0.0081	0.0081	0.0000	0.0000	0.0000	0.0092	0.0101	0.0000	0.0000
CO_2	0.0003	0.0004	0.1347	0.1347	0.1347	0.0000	0.0000	0.0000	0.0160	0.0507	0.9873	1.0000
H_2	0.0000	0.0000	0.0000	0.0000	0.0000	0.0000	0.0000	0.0000	0.0000	0.0000	0.0000	0.0000
H_2O	0.0099	0.9996	0.1550	0.1550	0.1550	1.0000	1.0000	1.0000	0.1748	0.0668	0.0127	0.0000
N_2	0.7732	0.0000	0.6785	0.6785	0.6785	0.0000	0.0000	0.0000	0.7730	0.8429	0.0000	0.0000
O_2	0.2074	0.0000	0.0238	0.0238	0.0238	0.0000	0.0000	0.0000	0.0271	0.0295	0.0000	0.0000
SO_2	0.0000	0.0000	0.0000	0.0000	0.0000	0.0000	0.0000	0.0000	0.0000	0.0000	0.0000	0.0000
Total	1.0000	1.0000	1.0000	1.0000	1.0000	1.0000	1.0000	1.0000	1.0000	1.0000	1.0000	1.0000
V-L Flowrate (kg_{mol}/hr)	984	230	95,534	74,325	21,208	116,344	31,643	31,643	65,239	76,894	9,084	8,969
V-L Flowrate (kg/hr)	28,385	4,140	2,752,462	2,141,416	611,047	2,095,977	570,060	570,060	1,744,469	2,183,416	396,807	394,733
Solids Flowrate (kg/hr)	0	37,179	0	0	0	0	0	0	0	0	0	0
Temperature (°C)	18	58	58	58	58	593	291	151	32	41	21	35
Pressure (MPa, abs)	0.10	0.10	0.10	0.10	0.10	24.23	0.51	0.92	0.10	0.10	0.16	15.27
Enthalpy (kJ/kg)[A]	32.81	---	303.63	303.63	303.63	3,477.66	3,046.14	637.34	87.36	148.96	28.22	-212.35
Density (kg/m^3)	1.2	---	1.1	1.1	1.1	69.2	2.0	916.0	1.3	1.1	2.9	794.3
V-L Molecular Weight	28.857	---	28.811	28.811	28.811	18.015	18.015	18.015	26.740	28.395	43.680	44.010
V-L Flowrate (lb_{mol}/hr)	2,169	506	210,616	163,859	46,757	256,495	69,761	69,761	143,826	169,522	20,028	19,774
V-L Flowrate (lb/hr)	62,577	9,128	6,068,141	4,721,014	1,347,127	4,620,838	1,256,768	1,256,768	3,845,896	4,813,608	874,811	870,237
Solids Flowrate (lb/hr)	0	81,967	0	0	0	0	0	0	0	0	0	0
Temperature (°F)	64	136	136	136	136	1,100	556	304	89	107	69	95
Pressure (psia)	15.0	14.8	14.8	14.8	14.8	3,514.7	73.5	133.6	14.8	14.8	23.5	2,214.5
Enthalpy (Btu/lb)[A]	14.1	---	130.5	130.5	130.5	1,495.1	1,309.6	274.0	37.6	64.0	12.1	-91.3
Density (lb/ft^3)	0.077	---	0.067	0.067	0.067	4.319	0.123	57.184	0.078	0.069	0.183	49.586

A - Reference conditions are 32.02 F & 0.089 PSIA

Exhibit 3-10 Case 1D Stream Table, Supercritical PC with 85% CO_2 Capture

	1	2	3	4	5	6	7	8	9	10	11	12	13
V-L Mole Fraction													
Ar	0.0092	0.0092	0.0092	0.0092	0.0092	0.0000	0.0000	0.0087	0.0000	0.0087	0.0087	0.0000	0.0000
CO_2	0.0003	0.0003	0.0003	0.0003	0.0003	0.0000	0.0000	0.1450	0.0000	0.1450	0.1450	0.0000	0.0000
H_2	0.0000	0.0000	0.0000	0.0000	0.0000	0.0000	0.0000	0.0000	0.0000	0.0000	0.0000	0.0000	0.0000
H_2O	0.0099	0.0099	0.0099	0.0099	0.0099	0.0000	0.0000	0.0870	0.0000	0.0870	0.0870	1.0000	1.0000
N_2	0.7732	0.7732	0.7732	0.7732	0.7732	0.0000	0.0000	0.7324	0.0000	0.7324	0.7324	0.0000	0.0000
O_2	0.2074	0.2074	0.2074	0.2074	0.2074	0.0000	0.0000	0.0247	0.0000	0.0247	0.0247	0.0000	0.0000
SO_2	0.0000	0.0000	0.0000	0.0000	0.0000	0.0000	0.0000	0.0021	0.0000	0.0021	0.0021	0.0000	0.0000
Total	1.0000	1.0000	1.0000	1.0000	1.0000	0.0000	0.0000	1.0000	0.0000	1.0000	1.0000	1.0000	1.0000
V-L Flowrate (kg_{mol}/hr)	65,727	65,727	20,191	20,191	1,718	0	0	92,700	0	92,700	92,700	3,389	13,388
V-L Flowrate (kg/hr)	1,896,682	1,896,682	582,641	582,641	49,586	0	0	2,757,177	0	2,757,177	2,757,177	61,050	241,185
Solids Flowrate (kg/hr)	0	0	0	0	0	252,779	4,902	19,609	19,609	0	0	25,555	0
Temperature (°C)	15	19	15	25	15	15	15	177	15	177	188	15	15
Pressure (MPa, abs)	0.10	0.11	0.10	0.11	0.10	0.10	0.10	0.10	0.10	0.10	0.11	0.10	0.10
Enthalpy (kJ/kg)[A]	30.23	34.36	30.23	40.78	30.23	---	---	335.07	---	316.66	328.98	---	62.80
Density (kg/m^3)	1.2	1.3	1.2	1.3	1.2	---	---	0.8	---	0.8	0.8	---	1,003.1
V-L Molecular Weight	28.857	28.857	28.857	28.857	28.857	---	---	29.743	---	29.743	29.743	---	18.015
V-L Flowrate (lb_{mol}/hr)	144,903	144,903	44,513	44,513	3,788	0	0	204,368	0	204,368	204,368	7,471	29,515
V-L Flowrate (lb/hr)	4,181,468	4,181,468	1,284,503	1,284,503	109,319	0	0	6,078,535	0	6,078,535	6,078,535	134,592	531,721
Solids Flowrate (lb/hr)	0	0	0	0	0	557,283	10,808	43,231	43,231	0	0	56,339	0
Temperature (°F)	59	66	59	78	59	59	59	350	59	350	371	59	59
Pressure (psia)	14.7	15.3	14.7	16.1	14.7	14.7	14.7	14.4	14.7	14.2	15.3	15.0	14.7
Enthalpy (Btu/lb)[A]	13.0	14.8	13.0	17.5	13.0	---	---	144.1	---	136.1	141.4	---	27.0
Density (lb/ft^3)	0.076	0.078	0.076	0.081	0.076	---	---	0.049	---	0.049	0.051	---	62.622

A - Reference conditions are 32.02 F & 0.089 PSIA

Exhibit 3-10 Case 1D Stream Table, Supercritical PC with 85% CO2 Capture (continued)

	14	15	16	17	18	19	20	21	22	23	24	25
V-L Mole Fraction												
Ar	0.0092	0.0000	0.0081	0.0081	0.0081	0.0000	0.0000	0.0000	0.0092	0.0106	0.0000	0.0000
CO_2	0.0003	0.0004	0.1347	0.1347	0.1347	0.0000	0.0000	0.0000	0.0158	0.0270	0.9873	1.0000
H_2	0.0000	0.0000	0.0000	0.0000	0.0000	0.0000	0.0000	0.0000	0.0000	0.0000	0.0000	0.0000
H_2O	0.0099	0.9996	0.1549	0.1549	0.1549	1.0000	1.0000	1.0000	0.1748	0.0453	0.0127	0.0000
N_2	0.7732	0.0000	0.6785	0.6785	0.6785	0.0000	0.0000	0.0000	0.7731	0.8861	0.0000	0.0000
O_2	0.2074	0.0000	0.0238	0.0238	0.0238	0.0000	0.0000	0.0000	0.0271	0.0311	0.0000	0.0000
SO_2	0.0000	0.0000	0.0000	0.0000	0.0000	0.0000	0.0000	0.0000	0.0000	0.0000	0.0000	0.0000
Total	1.0000	1.0000	1.0000	1.0000	1.0000	1.0000	1.0000	1.0000	1.0000	1.0000	1.0000	1.0000
V-L Flowrate (kg_{mol}/hr)	1,047	244	101,266	95,595	5,671	123,302	40,669	40,669	83,895	77,537	11,696	11,548
V-L Flowrate (kg/hr)	30,210	4,400	2,917,608	2,754,222	163,386	2,221,322	732,658	732,658	2,243,114	2,189,783	510,904	508,236
Solids Flowrate (kg/hr)	0	39,513	0	0	0	0	0	0	0	0	0	0
Temperature (°C)	18	58	58	58	58	593	291	151	32	35	21	35
Pressure (MPa, abs)	0.10	0.10	0.10	0.10	0.10	24.23	0.51	0.92	0.10	0.10	0.16	15.27
Enthalpy (kJ/kg)[A]	32.81	---	303.64	303.64	303.64	3,477.66	3,046.14	637.34	87.36	107.94	28.22	-212.35
Density (kg/m^3)	1.2	---	1.1	1.1	1.1	69.2	2.0	916.0	1.3	1.1	2.9	794.3
V-L Molecular Weight	28.857	---	28.811	28.811	28.811	18.015	18.015	18.015	26.737	28.242	43.681	44.010
V-L Flowrate (lb_{mol}/hr)	2,308	538	223,253	210,751	12,502	271,835	89,659	89,659	184,958	170,939	25,786	25,460
V-L Flowrate (lb/hr)	66,601	9,700	6,432,224	6,072,019	360,205	4,897,176	1,615,234	1,615,234	4,945,220	4,827,645	1,126,351	1,120,468
Solids Flowrate (lb/hr)	0	87,111	0	0	0	0	0	0	0	0	0	0
Temperature (°F)	64	136	136	136	136	1,100	556	304	89	94	69	95
Pressure (psia)	15.0	14.8	14.8	14.8	14.8	3,514.7	73.5	133.6	14.8	14.8	23.5	2,214.5
Enthalpy (Btu/lb)[A]	14.1	---	130.5	130.5	130.5	1,495.1	1,309.6	274.0	37.6	46.4	12.1	-91.3
Density (lb/ft^3)	0.077	---	0.067	0.067	0.067	4.319	0.123	57.184	0.078	0.070	0.183	49.586

A - Reference conditions are 32.02 F & 0.089 PSIA

Exhibit 3-11 Cases 1A Through 1D Performance Modeling Results

POWER SUMMARY (Gross Power at Generator Terminals, kWe)	Case 1A (30%)	Case 1B (50%)	Case 1C (70%)	Case 1D (85%)
Steam Turbine Power	**601,500**	**618,200**	**637,800**	**654,800**
AUXILIARY LOAD SUMMARY, kWe[1]				
Coal Handling and Conveying	460	470	490	500
Limestone Handling & Reagent Preparation	1,010	1,080	1,160	1,230
Pulverizers	3,110	3,330	3,580	3,790
Ash Handling	590	640	680	720
Primary Air Fans	1,450	1,550	1,670	1,770
Forced Draft Fans	1,850	1,980	2,130	2,260
Induced Draft Fans	8,020	8,590	9,230	9,780
SCR	20	20	20	20
Baghouse	80	80	90	90
FGD Pumps and Agitators	3,310	3,550	3,810	4,040
Econamine FG Plus Auxiliaries	5,500	9,900	14,800	19,100
CO_2 Compression	11,790	21,200	31,730	40,860
Econamine Condensate Pump	40	70	110	140
Miscellaneous Balance of Plant [2]	2,000	2,000	2,000	2,000
Steam Turbine Auxiliaries	400	400	400	400
Condensate Pumps	720	680	630	590
Circulating Water Pumps	5,820	6,710	8,260	9,600
Cooling Tower Fans	3,400	3,920	4,820	5,610
Transformer Loss	1,940	2,040	2,150	2,250
TOTAL AUXILIARIES, kWe	**51,510**	**68,210**	**87,760**	**104,750**
NET POWER, kWe	**549,990**	**549,990**	**550,040**	**550,050**
Net Plant Efficiency, % (HHV)	35.2%	32.9%	30.6%	28.9%
Net Plant Heat Rate, kJ/kWh (Btu/kWh)	10,229 (9,695)	10,950 (10,379)	11,765 (11,151)	12,470 (11,819)
CONDENSER COOLING DUTY GJ/hr (10^6 Btu/hr)	**2,164 (2,051)**	**2,037 (1,931)**	**1,900 (1,801)**	**1,783 (1,690)**
CONSUMABLES				
As-Received Coal Feed, kg/hr (lb/hr)[3]	207,322 (457,066)	221,950 (489,316)	238,483 (525,764)	252,779 (557,283)
Thermal Input, kWt	1,562,693	1,672,956	1,797,570	1,905,333
Raw Water Withdrawal, m^3/min (gpm)	23.6 (6,245)	26.4 (6,987)	31.7 (8,386)	36.4 (9,615)
Raw Water Consumption, m^3/min (gpm)	18.5 (4,898)	20.6 (5,433)	24.5 (6,474)	28.0 (7,392)

Notes:
1. Boiler feed pumps are turbine driven
2. Includes plant control systems, lighting, HVAC, and miscellaneous low voltage loads
3. HHV of As Received Illinois No. 6 coal is 27,135 kJ/kg (11,666 Btu/lb)

3.2.1.1 Environmental Performance for Cases 1A through 1D

Each case was designed to meet presumptive BACT standards utilizing the emissions control processes described in Section 2.4. A summary of plant air emissions is presented in Exhibit 3-12.

SO_2 emissions are controlled using a wet limestone forced oxidation FGD that achieves a removal efficiency of 98%. To avoid the formation of heat stable salts in the Econamine process, an SO_2 polishing step is included to reduce the sulfur content to 10 ppm prior to the CO_2 absorber, and the balance of the SO_2 is absorbed by the MEA solution resulting in negligible stack emissions. The byproduct calcium sulfate is dewatered and stored on site. The wallboard grade material can potentially be marketed and sold, but since it is highly dependent on local market conditions, no byproduct credit was taken. The saturated flue gas exiting the FGD is vented through the plant stack.

Particulate emissions are controlled using a pulse jet fabric filter (baghouse) which operates at an efficiency of 99.8 percent. It was assumed that 20 percent of the ash exits the boiler as bottom ash and the remaining 80 percent exits the boiler in the flue gas [41].

Co-benefit capture of Hg in the fabric filter and FGD system was assumed to achieve a 90 percent capture rate [42]. The high chlorine content of the Illinois No. 6 coal and the SCR system will convert most of the Hg in the system to an oxidized state [43]. An inexpensive FGD system additive can be used to promote Hg capture if necessary, but was not included.

The carbon balance for the four cases is shown in Exhibit 3-13. The carbon input to the plant consists of carbon in the coal, limestone, and combustion and FGD forced oxidation air.

CO_2 capture efficiency is calculated as the pounds of CO_2 captured divided by the pounds of CO_2 produced. Most of the CO_2 produced comes from coal combustion, but a small amount is formed in the FGD system. The sum of these two sources is the amount produced.

(Carbon in Sequestration Product) / (Carbon in the Coal + Net Carbon from Limestone) or
88,274 / (291,355 + 4,206) *100 = 30% (Case 1A)
158,670 / (311,913 + 4,502) *100 = 50% (Case 1B)
237,502 / (335,147 + 4,837) *100 = 70% (Case 1C)
305,794 / (355,239 + 5,128) *100 = 85% (Case 1D)

Exhibit 3-14 shows the sulfur balance for the four cases. Sulfur input comes solely from the sulfur in the coal. Sulfur output is the gypsum sulfur byproduct, and the sulfur emitted in the stack gas. The total sulfur capture is represented by the following fraction:

(Sulfur byproduct/Sulfur in the coal) or
(11,227/11,456)*100 = 98.0% (Case 1A)
(12,019/12,264)*100 = 98.0% (Case 1B)
(12,914/13,178)*100 = 98.0% (Case 1C)
(13,688/13,968)*100 = 98.0% (Case 1D)

The overall water balances for Case 1A, 1B, 1C, and 1D are shown in Exhibit 3-15, Exhibit 3-16, Exhibit 3-17, and Exhibit 3-18, respectively. Raw water is obtained from groundwater (50 percent) and from municipal sources (50 percent). Water demand represents the total amount of water required for a particular process. Some water is recovered within the process and that water is reused as internal recycle. Raw water withdrawal is the difference between water demand and internal recycle. Process water discharged from the power plant is also accounted for in this study. Raw water consumption represents raw water withdrawal less process water discharge.

Heat and Mass Balance Diagrams

Heat and mass balance diagrams are shown for the following subsystems in Exhibit 3-19 through Exhibit 3-26.

- Boiler and flue gas cleanup
- Steam and feedwater

An overall plant energy balance is provided in tabular form for Case 1A, 1B, 1C, and 1D in Exhibit 3-27, Exhibit 3-28, Exhibit 3-29, and Exhibit 3-30, respectively. The power out is the steam turbine power after generator losses. In addition, energy balance Sankey diagrams are provided in Exhibit 3-31, Exhibit 3-32, Exhibit 3-33, and Exhibit 3-34 for Case 1A, 1B, 1C, and 1D, respectively.

Exhibit 3-12 Cases 1A through 1D Estimated Air Emission Rates

	kg/GJ (lb/10^6 Btu)				Tonne/year (ton/year) 85% capacity factor				kg/MWh (lb/MWh)			
	Case 1A	Case 1B	Case 1C	Case 1D	Case 1A	Case 1B	Case 1C	Case 1D	Case 1A	Case 1B	Case 1C	Case 1D
SO_2	0.028 (0.064)	0.022 (0.050)	0.015 (0.036)	0.007 (0.017)	1,159 (1,278)	964 (1,063)	740 (816)	370 (408)	0.259 (0.570)	0.210 (0.460)	0.156 (0.340)	0.076 (0.170)
NO_X	0.030 (0.070)	0.030 (0.070)	0.030 (0.070)	0.030 (0.070)	1,261 (1,390)	1,350 (1,488)	1,450 (1,598)	1,537 (1,694)	0.281 (0.621)	0.293 (0.646)	0.305 (0.673)	0.315 (0.695)
PM	0.006 (0.0130)	0.006 (0.0130)	0.006 (0.0130)	0.006 (0.0130)	234 (258)	251 (276)	269 (297)	285 (315)	0.052 (0.115)	0.054 (0.120)	0.057 (0.125)	0.059 (0.129)
Hg	0.49×10^{-6} (1.14×10^{-6})	0.49×10^{-6} (1.14×10^{-6})	0.49×10^{-6} (1.14×10^{-6})	0.49×10^{-6} (1.14×10^{-6})	0.021 (0.023)	0.022 (0.024)	0.024 (0.026)	0.025 (0.028)	4.60×10^{-6} (10.1×10^{-6})	4.79×10^{-6} (10.6×10^{-6})	4.99×10^{-6} (11.0×10^{-6})	5.15×10^{-6} (11.3×10^{-6})
CO_2	61.4 (142.9)	43.7 (101.7)	26.5 (61.7)	13.4 (31.2)	2,573,010 (2,836,258)	1,960,464 (2,161,042)	1,277,186 (1,407,857)	684,813 (754,877)	574 (1,267)	426 (939)	269 (593)	140 (310)
CO_2 net									628 (1,385)	479 (1,055)	312 (687)	167 (369)

Exhibit 3-13 Cases 1A through 1D Carbon Balance

Carbon In, kg/hr (lb/hr)				
	Case 1A	**Case 1B**	**Case 1C**	**Case 1D**
Coal	132,157 (291,355)	141,481 (311,913)	152,020 (335,147)	161,134 (355,239)
Air (CO_2)	282 (622)	302 (666)	324 (715)	344 (758)
Limestone	2,129 (4,693)	2,279 (5,024)	2,436 (5,371)	2,593 (5,717)
Total	**134,568 (296,670)**	**144,062 (317,603)**	**154,780 (341,233)**	**164,071 (361,714)**
Carbon Out, kg/hr (lb/hr)				
Stack Gas	94,308 (207,913)	71,856 (158,416)	46,812 (103,204)	25,100 (55,337)
CO_2 Product	40,041 (88,274)	71,972 (158,670)	107,729 (237,502)	138,706 (305,794)
Gypsum	221 (487)	237 (522)	242 (534)	267 (589)
Convergence Tolerance*	-2 (-4)	-3 (-5)	-3 (-7)	-2 (-6)
Total	**134,568 (296,670)**	**144,062 (317,603)**	**154,780 (341,233)**	**164,071 (361,714)**

Exhibit 3-14 Cases 1A through 1D Sulfur Balance

Sulfur In, kg/hr (lb/hr)				
	Case 1A	**Case 1B**	**Case 1C**	**Case 1D**
Coal	5,196 (11,456)	5,563 (12,264)	5,977 (13,178)	6,336 (13,968)
Total	**5,196 (11,456)**	**5,563 (12,264)**	**5,977 (13,178)**	**6,336 (13,968)**
Sulfur Out, kg/hr (lb/hr)				
Gypsum	5,092 (11,227)	5,452 (12,019)	5,858 (12,914)	6,209 (13,688)
Stack Gas	78 (172)	65 (143)	50 (110)	25 (55)
AGR	26 (57)	46 (102)	70 (154)	102 (224)
Convergence Tolerance*	0 (0)	0 (0)	-1 (0)	0 (1)
Total	**5,196 (11,456)**	**5,563 (12,264)**	**5,977 (13,178)**	**6,336 (13,968)**

Exhibit 3-15 Case 1A (30%) Water Balance

Water Use	Water Demand, m^3/min (gpm)	Internal Recycle, m^3/min (gpm)	Raw Water Withdrawal, m^3/min (gpm)	Process Water Discharge, m^3/min (gpm)	Raw Water Consumption, m^3/min (gpm)
Econamine	0.04 (10)	0.0 (0)	0.04 (10)	0.0 (0)	0.04 (10)
FGD Makeup	4.14 (1,093)	0.0 (0)	4.14 (1,093)	0.0 (0)	4.14 (1,093)
BFW Makeup	0.30 (80)	0.0 (0)	0.30 (80)	0.0 (0)	0.30 (80)
Cooling Tower Makeup	22.7 (5,990)	3.51 (928)	19.2 (5,062)	5.10 (1,347)	14.06 (3,715)
Total	**27.2 (7,174)**	**3.51 (928)**	**23.6 (6,245)**	**5.10 (1,347)**	**18.5 (4,898)**
Total, gal/MWh$_{net}$	**783**	**101**	**681**	**147**	**534**

Exhibit 3-16 Case 1B (50%) Water Balance

Water Use	Water Demand, m^3/min (gpm)	Internal Recycle, m^3/min (gpm)	Raw Water Withdrawal, m^3/min (gpm)	Process Water Discharge, m^3/min (gpm)	Raw Water Consumption, m^3/min (gpm)
Econamine	0.07 (17)	0.0 (0)	0.07 (17)	0.0 (0)	0.07 (17)
FGD Makeup	4.43 (1,170)	0.0 (0)	4.43 (1,170)	0.0 (0)	4.43 (1,170)
BFW Makeup	0.33 (86)	0.0 (0)	0.33 (86)	0.0 (0)	0.33 (86)
Cooling Tower Makeup	26.2 (6,909)	4.53 (1,196)	21.6 (5,713)	5.9 (1,554)	15.75 (4,159)
Total	**31.0 (8,183)**	**4.53 (1,196)**	**26.4 (6,987)**	**5.9 (1,554)**	**20.6 (5,433)**
Total, gal/MWh$_{net}$	**893**	**130**	**762**	**170**	**593**

Exhibit 3-17 Case 1C (70%) Water Balance

Water Use	Water Demand, m^3/min (gpm)	Internal Recycle, m^3/min (gpm)	Raw Water Withdrawal, m^3/min (gpm)	Process Water Discharge, m^3/min (gpm)	Raw Water Consumption, m^3/min (gpm)
Econamine	0.10 (26)	0.0 (0)	0.10 (26)	0.0 (0)	0.10 (26)
FGD Makeup	4.75 (1,255)	0.0 (0)	4.75 (1,255)	0.0 (0)	4.75 (1,255)
BFW Makeup	0.35 (92)	0.0 (0)	0.35 (92)	0.0 (0)	0.35 (92)
Cooling Tower Makeup	32.2 (8,501)	5.64 (1,489)	26.5 (7,012)	7.2 (1,912)	19.31 (5,101)
Total	**37.4 (9,875)**	**5.64 (1,489)**	**31.7 (8,386)**	**7.2 (1,912)**	**24.5 (6,474)**
Total, gal/MWh$_{net}$	**1,077**	**162**	**915**	**209**	**706**

Exhibit 3-18 Case 1D (85%) Water Balance

Water Use	Water Demand, m^3/min (gpm)	Internal Recycle, m^3/min (gpm)	Raw Water Withdrawal, m^3/min (gpm)	Process Water Discharge, m^3/min (gpm)	Raw Water Consumption, m^3/min (gpm)
Econamine	0.13 (33)	0.0 (0)	0.13 (33)	0.0 (0)	0.13 (33)
FGD Makeup	5.04 (1,333)	0.0 (0)	5.04 (1,333)	0.0 (0)	5.04 (1,333)
BFW Makeup	0.37 (98)	0.0 (0)	0.37 (98)	0.0 (0)	0.37 (98)
Cooling Tower Makeup	37.4 (9,882)	6.55 (1,731)	30.9 (8,151)	8.4 (2,222)	22.44 (5,929)
Total	**42.9 (11,346)**	**6.55 (1,731)**	**36.4 (9,615)**	**8.4 (2,222)**	**28.0 (7,392)**
Total, gal/MWh$_{net}$	**1,238**	**189**	**1,049**	**242**	**806**

This page intentionally left blank

Exhibit 3-19 Case 1A (30%) Heat and Mass Balance, Supercritical PC Boiler and Gas Cleanup Systems

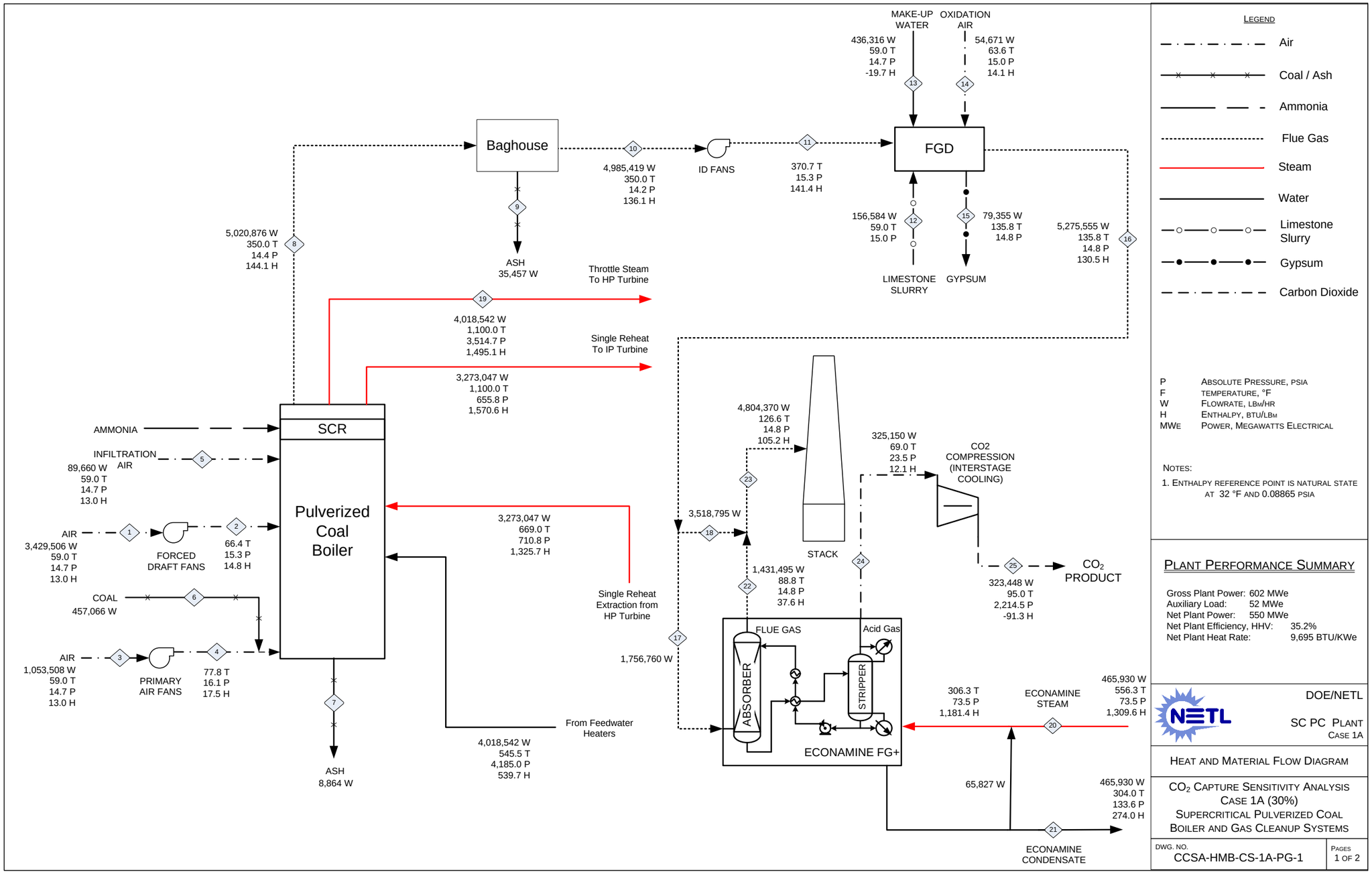

Exhibit 3-20 Case 1A (30%) Heat and Mass Balance, Power Block Systems

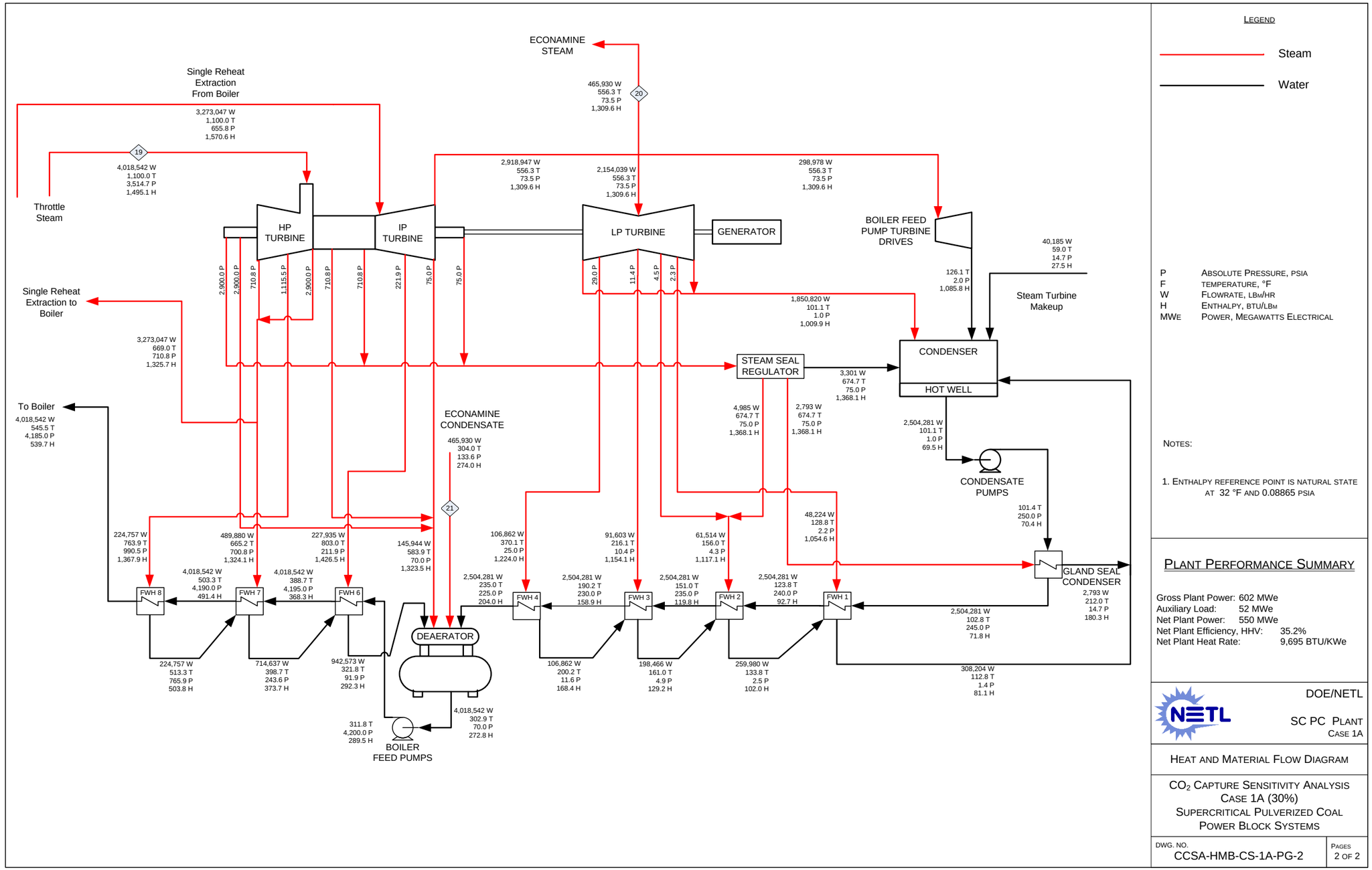

Exhibit 3-21 Case 1B (50%) Heat and Mass Balance, Supercritical PC Boiler and Gas Cleanup Systems

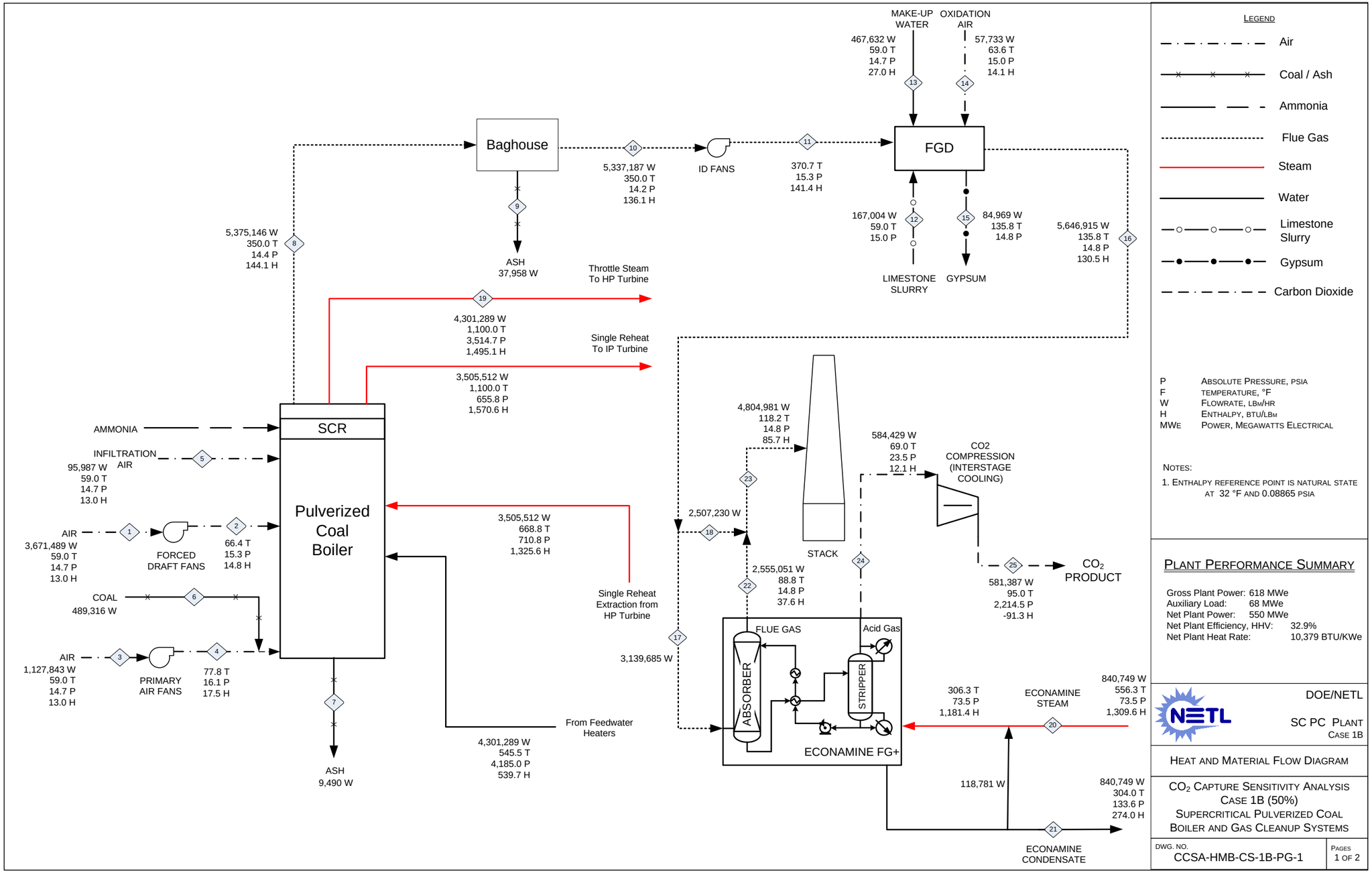

Exhibit 3-22 Case 1B (50%) Heat and Mass Balance, Power Block Systems

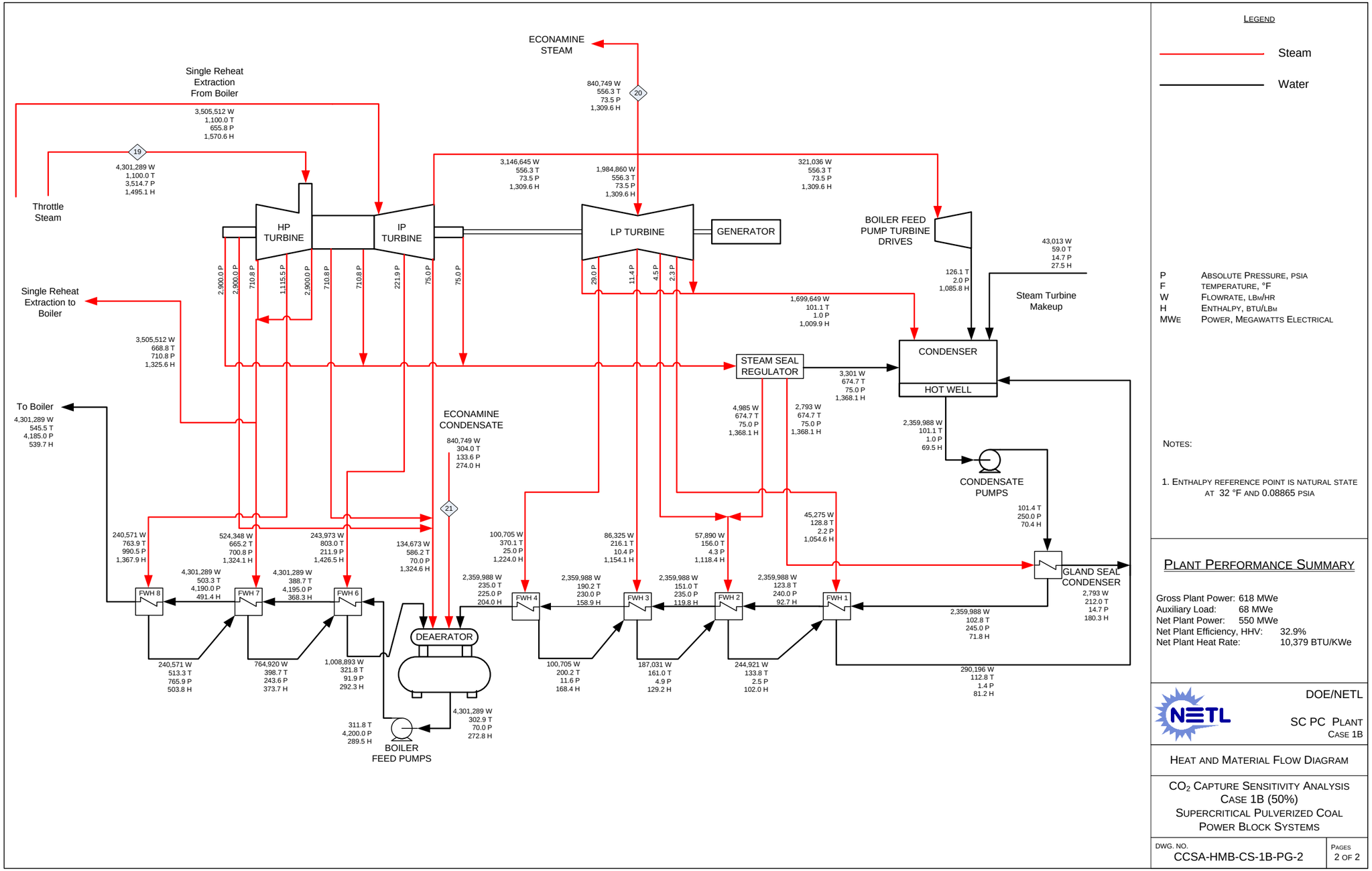

Exhibit 3-23 Case 1C (70%) Heat and Mass Balance, Supercritical PC Boiler and Gas Cleanup Systems

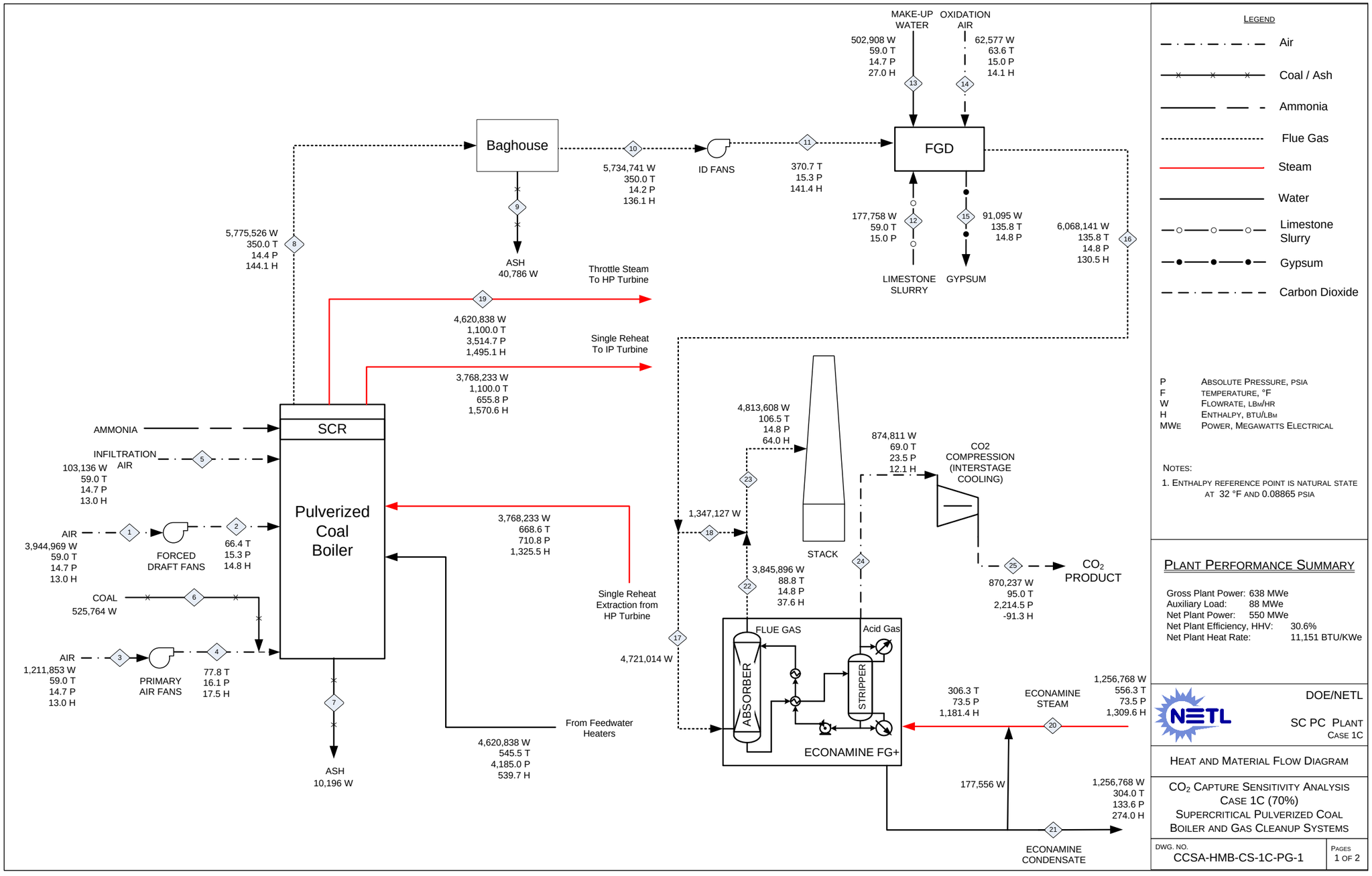

Exhibit 3-24 Case 1C (70%) Heat and Mass Balance, Power Block Systems

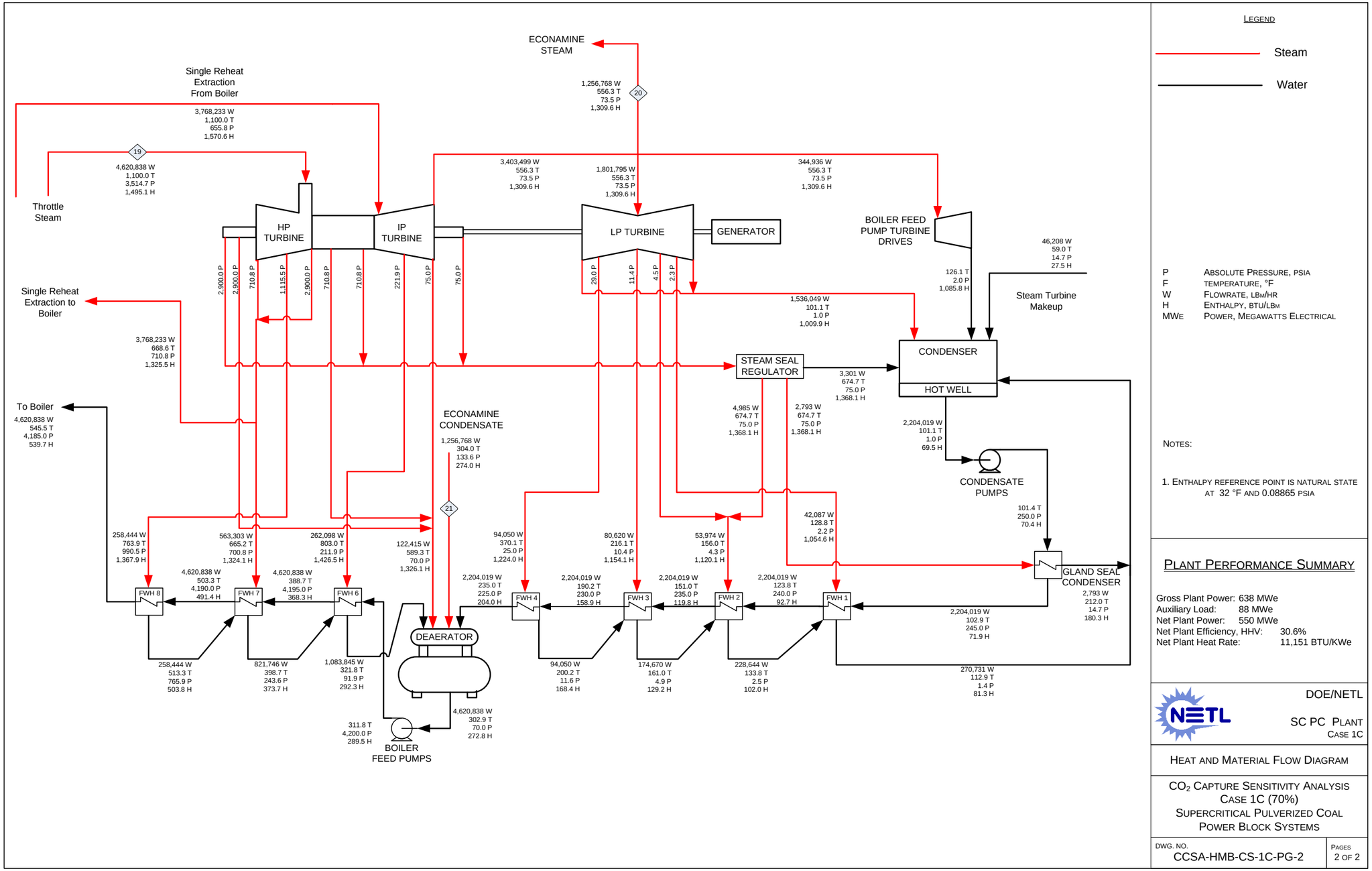

Exhibit 3-25 Case 1D (85%) Heat and Mass Balance, Supercritical PC Boiler and Gas Cleanup Systems

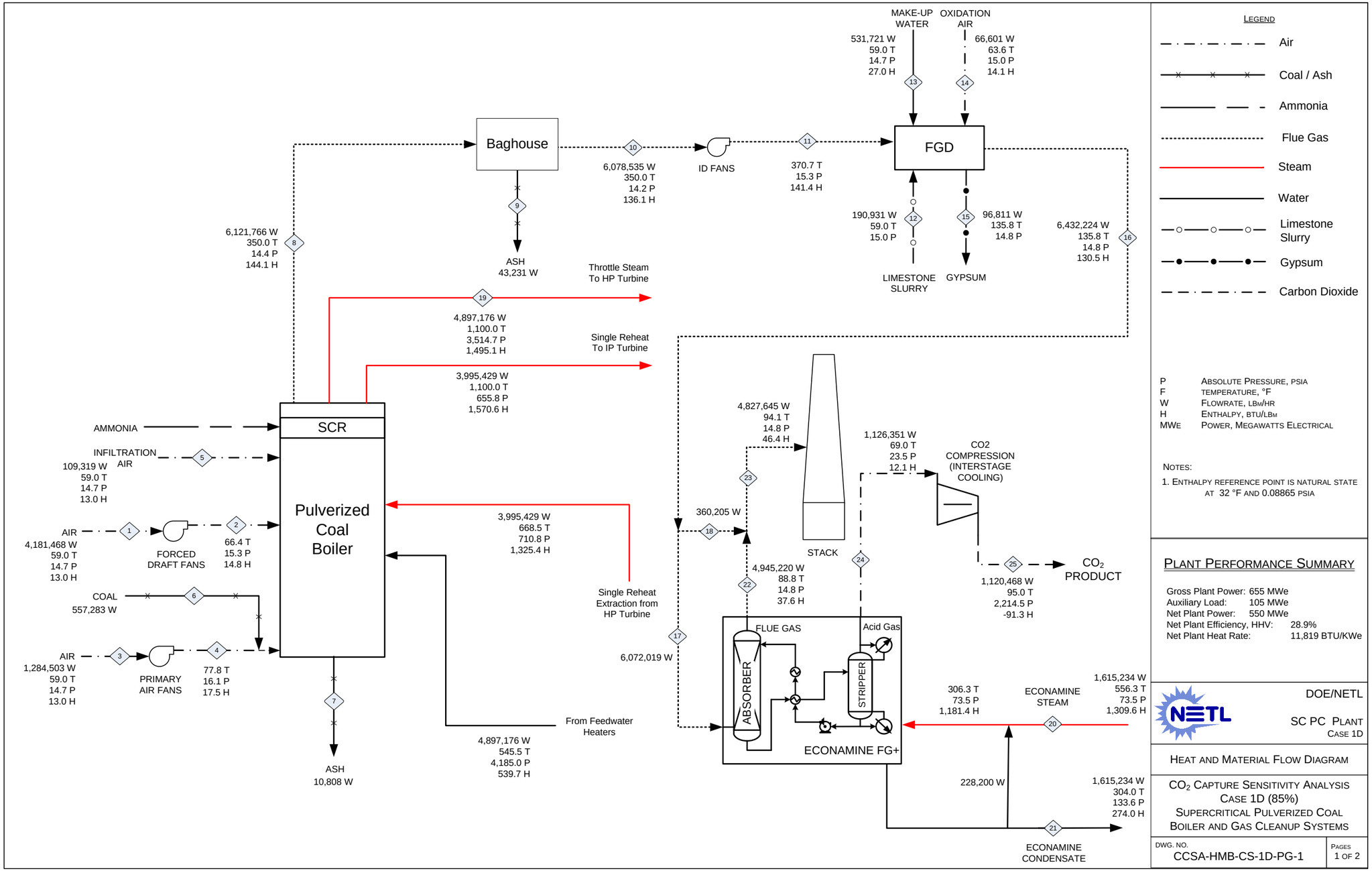

Exhibit 3-26 Case 1D (85%) Heat and Mass Balance, Power Block Systems

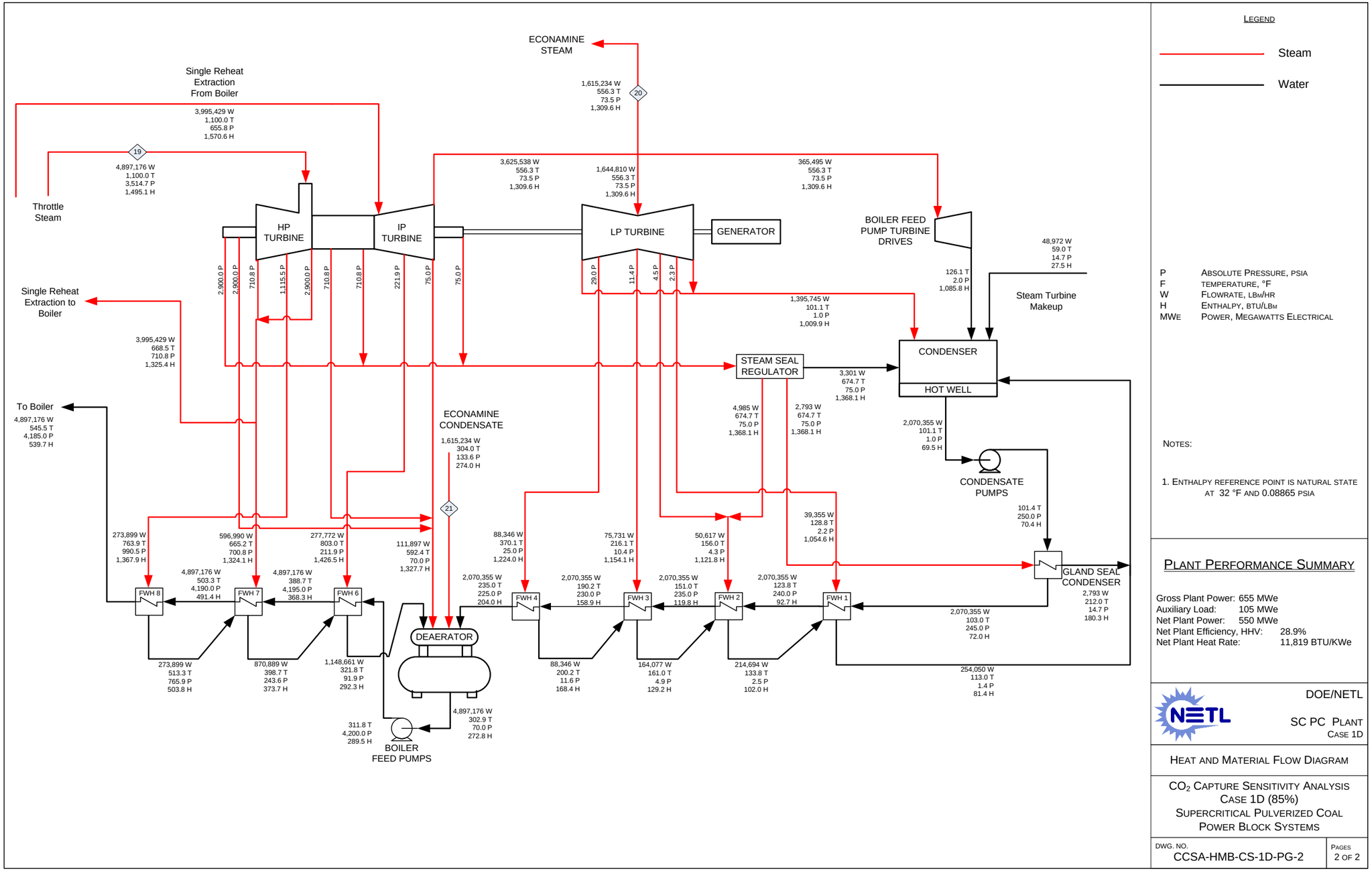

Exhibit 3-27 Case 1A (30%) Energy Balance

	HHV	Sensible + Latent	Power	Total
Heat In GJ/hr (MMBtu/hr)				
Coal	5,626 (5,332)	*4.7 (4.5)*		5,630 (5,337)
Combustion Air		62.7 (59.4)		62.7 (59.4)
Raw Water Makeup		93.1 (88.3)		93.1 (88.3)
Limestone		0.46 (0.43)		0.46 (0.43)
Totals	**5,626 (5,332)**	**161.0 (152.6)**	**0.0 (0.0)**	**5,787 (5,485)**
Heat Out GJ/hr (MMBtu/hr)				
Bottom Ash		0.5 (0.5)		0.5 (0.5)
Fly Ash + Gypsum		2.0 (1.9)		2.0 (1.9)
Flue Gas		533 (505)		533 (505)
CO_2		*-31 (-30)*		*-31 (-30)*
Cooling Tower*		*2,384.4 (2,260.0)*		*2,384.4 (2,260.0)*
Process Losses**		*917.8 (869.9)*		*917.8 (869.9)*
Net Power			1,980 (1,877)	1,980 (1,877)
Totals	**0.0 (0.0)**	**3,807 (3,608)**	**1,980 (1,877)**	**5,787 (5,485)**

Note: Italicized numbers are estimated
Reference conditions are 0 °C (32.02 °F) & 0.6 kPa (0.089 psia)
* Cooling Tower includes losses from the Condenser, Cooling Tower Blowdown, and Econamine cooling water.
** Process losses are estimated to match the heat input to the plant.
Process losses include losses from: steam turbine, combustion reactions, gas cooling, and Econamine steam.

Exhibit 3-28 Case 1B (50%) Energy Balance

	HHV	Sensible + Latent	Power	Total
Heat In GJ/hr (MMBtu/hr)				
Coal	6,023 (5,708)	*5.0 (4.8)*		6,028 (5,713)
Combustion Air		67.1 (63.6)		67.1 (63.6)
Raw Water Makeup		106.8 (101.3)		106.8 (101.3)
Limestone		0.49 (0.46)		0.49 (0.46)
Totals	**6,023 (5,708)**	**179.5 (170.1)**	**0.0 (0.0)**	**6,202 (5,878)**
Heat Out GJ/hr (MMBtu/hr)				
Bottom Ash		0.5 (0.5)		0.5 (0.5)
Fly Ash + Gypsum		2.2 (2.1)		2.2 (2.1)
Flue Gas		435 (412)		435 (412)
CO_2		*-56 (-53)*		*-56 (-53)*
Cooling Tower*		*2,434.7 (2,307.7)*		*2,434.7 (2,307.7)*
Process Losses**		*1,406.2 (1,332.8)*		*1,406.2 (1,332.8)*
Net Power			1,980 (1,877)	1,980 (1,877)
Totals	**0.0 (0.0)**	**4,222 (4,002)**	**1,980 (1,877)**	**6,202 (5,878)**

Note: Italicized numbers are estimated
Reference conditions are 0 °C (32.02 °F) & 0.6 kPa (0.089 psia)
* Cooling Tower includes losses from the Condenser, Cooling Tower Blowdown, and Econamine cooling water.
** Process losses are estimated to match the heat input to the plant.
Process losses include losses from: steam turbine, combustion reactions, gas cooling, and Econamine steam.

Exhibit 3-29 Case 1C (70%) Energy Balance

	HHV	Sensible + Latent	Power	Total
Heat In GJ/hr (MMBtu/hr)				
Coal	6,471 (6,134)	*5.4 (5.1)*		6,477 (6,139)
Combustion Air		72.1 (68.4)		72.1 (68.4)
Raw Water Makeup		130.3 (123.5)		130.3 (123.5)
Limestone		0.52 (0.49)		0.52 (0.49)
Totals	**6,471 (6,134)**	**208.3 (197.4)**	**0.0 (0.0)**	**6,680 (6,331)**
Heat Out GJ/hr (MMBtu/hr)				
Bottom Ash		0.6 (0.6)		0.6 (0.6)
Fly Ash + Gypsum		2.4 (2.2)		2.4 (2.2)
Flue Gas		325 (308)		325 (308)
CO_2		*-84 (-79)*		*-84 (-79)*
Cooling Tower*		*2,777.1 (2,632.2)*		*2,777.1 (2,632.2)*
Process Losses**		*1,677.9 (1,590.4)*		*1,677.9 (1,590.4)*
Net Power			1,980 (1,877)	1,980 (1,877)
Totals	**0.0 (0.0)**	**4,699 (4,454)**	**1,980 (1,877)**	**6,680 (6,331)**

Note: Italicized numbers are estimated
Reference conditions are 0 °C (32.02 °F) & 0.6 kPa (0.089 psia)
* Cooling Tower includes losses from the Condenser, Cooling Tower Blowdown, and Econamine cooling water.
** Process losses are estimated to match the heat input to the plant.
Process losses include losses from: steam turbine, combustion reactions, gas cooling, and Econamine steam.

Exhibit 3-30 Case 1D (85%) Energy Balance

	HHV	Sensible + Latent	Power	Total
Heat In GJ/hr (MMBtu/hr)				
Coal	6,859 (6,501)	*5.7 (5.4)*		6,865 (6,507)
Combustion Air		76.4 (72.5)		76.4 (72.5)
Raw Water Makeup		150.6 (142.7)		150.6 (142.7)
Limestone		0.56 (0.53)		0.56 (0.53)
Totals	**6,859 (6,501)**	**233.3 (221.1)**	**0 (0)**	**7,092 (6,722)**
Heat Out GJ/hr (MMBtu/hr)				
Bottom Ash		0.6 (0.6)		0.6 (0.6)
Fly Ash + Gypsum		2.5 (2.4)		2.5 (2.4)
Flue Gas		236 (224)		236 (224)
CO_2		*-108 (-102)*		*-108 (-102)*
Cooling Tower*		*3,076.6 (2,916.1)*		*3,076.6 (2,916.1)*
Process Losses**		*1,904.1 (1,804.8)*		*1,904.1 (1,804.8)*
Net Power			1,980 (1,877)	1,980 (1,877)
Totals		**5,112 (4,846)**	**1,980 (1,877)**	**7,092 (6,722)**

Note: Italicized numbers are estimated
Reference conditions are 0 °C (32.02 °F) & 0.6 kPa (0.089 psia)
* Cooling Tower includes losses from the Condenser, Cooling Tower Blowdown, and Econamine cooling water.
** Process losses are estimated to match the heat input to the plant.
Process losses include losses from: steam turbine, combustion reactions, gas cooling, and Econamine steam.

Exhibit 3-31 Case 1A Energy Balance Sankey Diagram

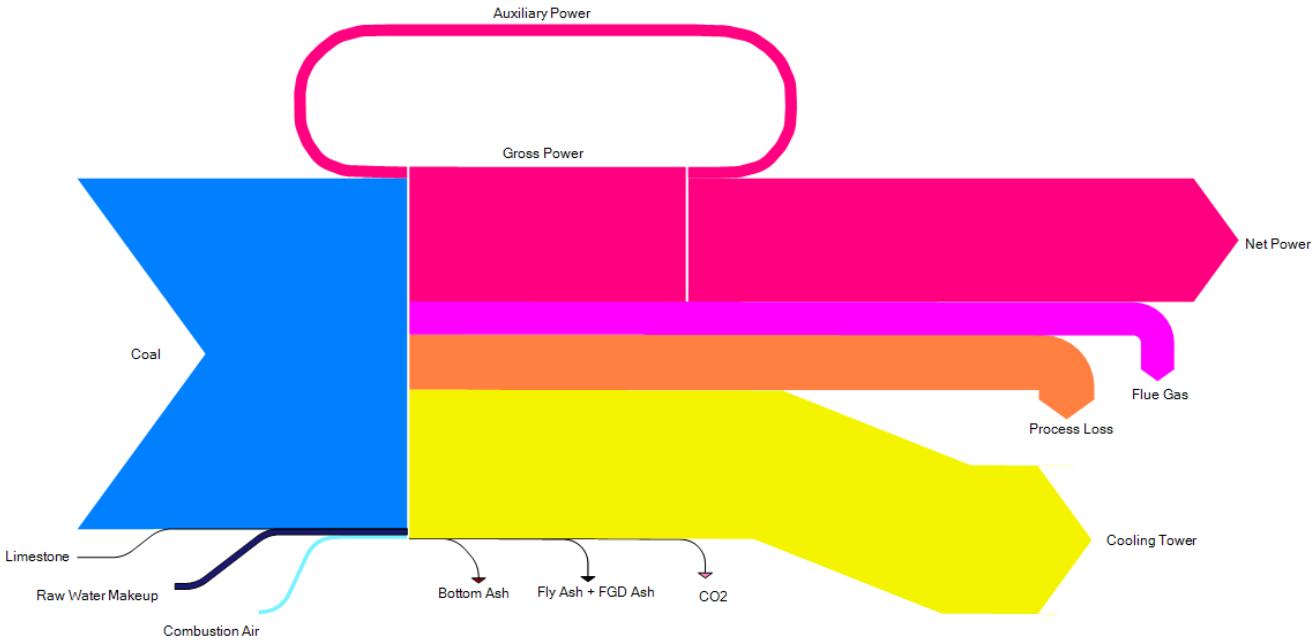

Exhibit 3-32 Case 1B Energy Balance Sankey Diagram

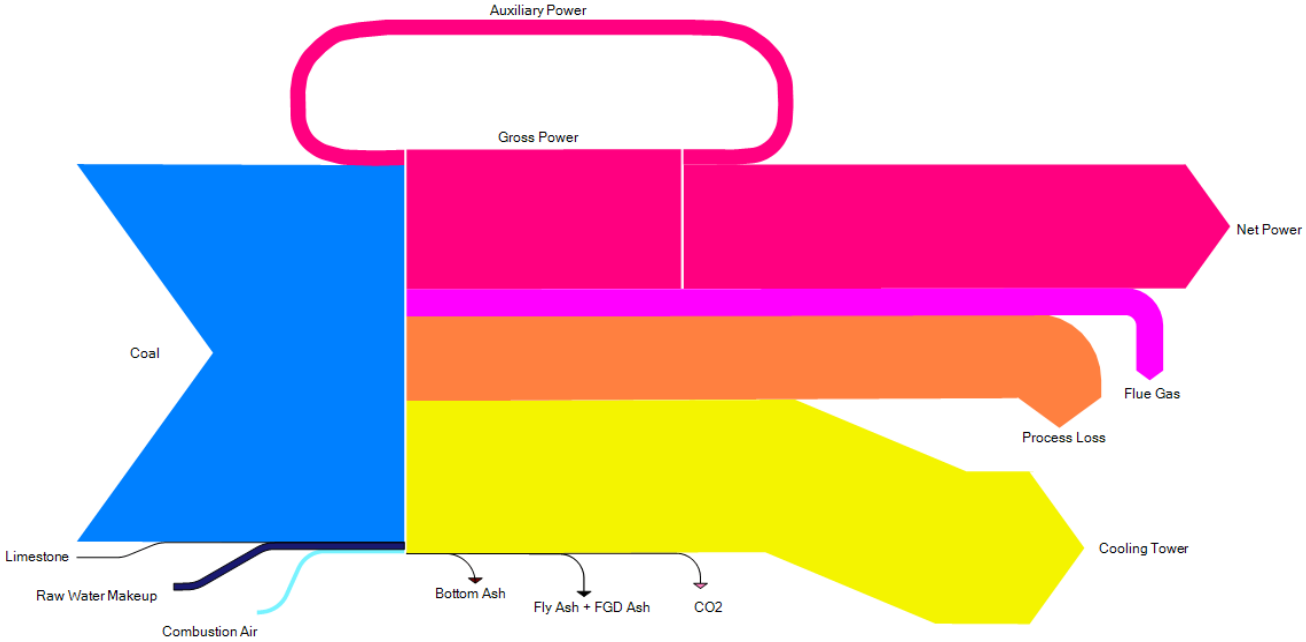

Exhibit 3-33 Case 1C Energy Balance Sankey Diagram

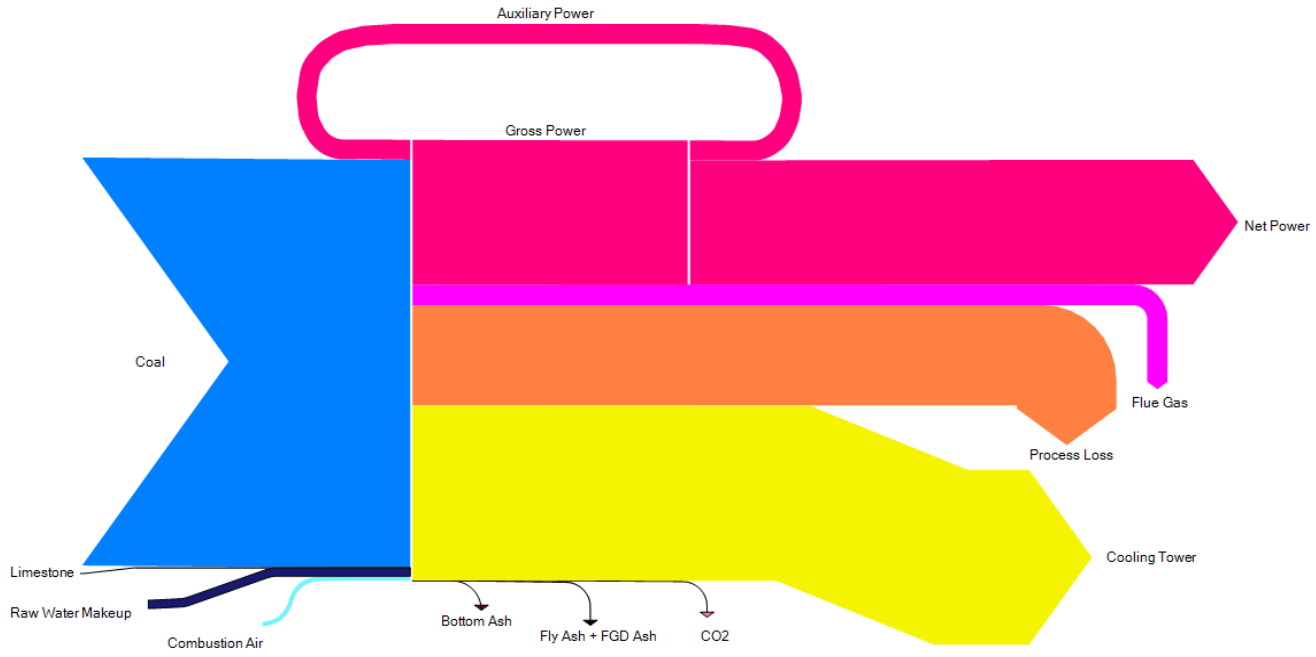

Exhibit 3-34 Case 1D Energy Balance Sankey Diagram

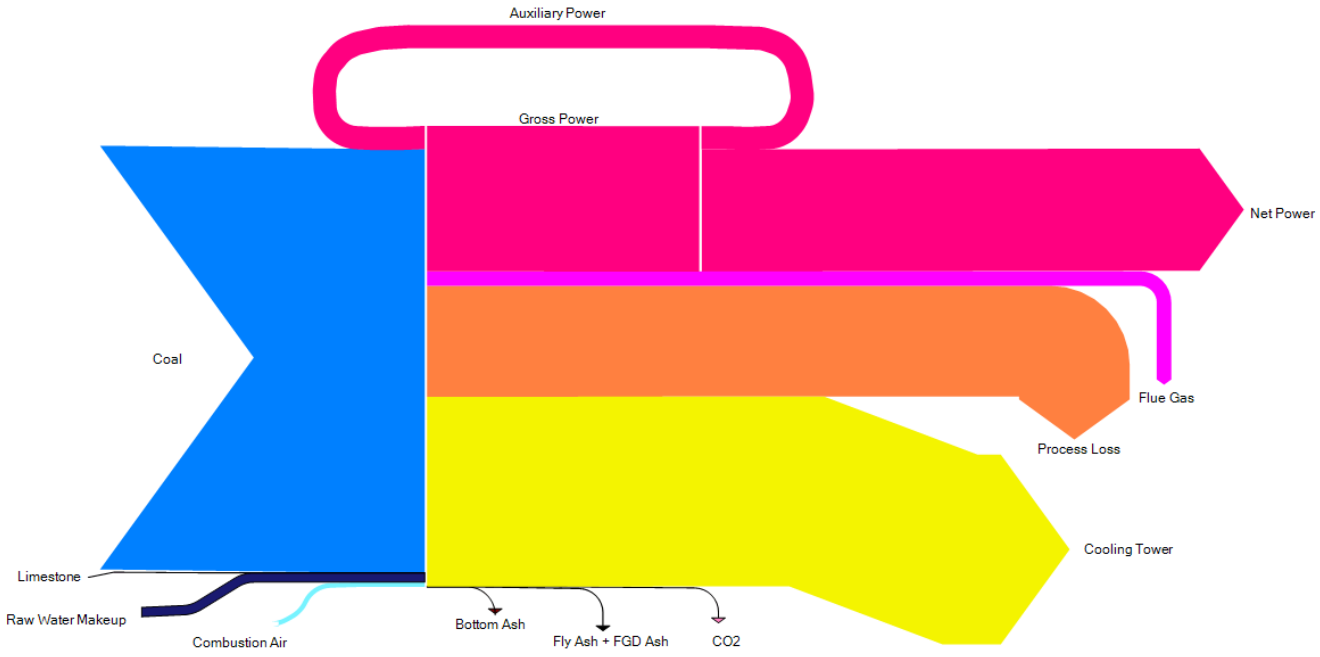

3.2.1.2 Major Equipment List for Cases 1A through 1D

Major equipment items for the CO_2 capture bypass cases are shown in the following tables. The accounts used in the equipment list correspond to the account numbers used in the cost estimates in Section 3.2.4. In general, the design conditions include a 10 percent contingency for flows and heat duties and a 21 percent contingency for heads on pumps and fans.

ACCOUNT 1 FUEL AND SORBENT HANDLING

Equipment No.	Description	Type	Design Condition				Opr Qty. (Spares)
			Case 1A	Case 1B	Case 1C	Case 1D	
1	Bottom Trestle Dumper and Receiving Hoppers	N/A	181 tonne (200 ton)	181 tonne (200 ton)	181 tonne (200 ton)	181 tonne (200 ton)	2 (0)
2	Feeder	Belt	572 tonne/hr (630 tph)	572 tonne/hr (630 tph)	572 tonne/hr (630 tph)	572 tonne/hr (630 tph)	2 (0)
3	Conveyor No. 1	Belt	1,134 tonne/hr (1,250 tph)	1,134 tonne/hr (1,250 tph)	1,134 tonne/hr (1,250 tph)	1,134 tonne/hr (1,250 tph)	1 (0)
4	Transfer Tower No. 1	Enclosed	N/A	N/A	N/A	N/A	1 (0)
5	Conveyor No. 2	Belt	1,134 tonne/hr (1,250 tph)	1,134 tonne/hr (1,250 tph)	1,134 tonne/hr (1,250 tph)	1,134 tonne/hr (1,250 tph)	1 (0)
6	As-Received Coal Sampling System	Two-stage	N/A	N/A	N/A	N/A	1 (0)
7	Stacker/Reclaimer	Traveling Linear	1,134 tonne/hr (1,250 tph)	1,134 tonne/hr (1,250 tph)	1,134 tonne/hr (1,250 tph)	1,134 tonne/hr (1,250 tph)	1 (0)
8	Reclaim Hopper	N/A	45 tonne (50 ton)	45 tonne (50 ton)	45 tonne (50 ton)	54 tonne (60 ton)	2 (1)
9	Feeder	Vibratory	172 tonne/hr (190 tph)	181 tonne/hr (200 tph)	200 tonne/hr (220 tph)	209 tonne/hr (230 tph)	2 (1)
10	Conveyor No. 3	Belt w/tripper	345 tonne/hr (380 tph)	363 tonne/hr (400 tph)	390 tonne/hr (430 tph)	417 tonne/hr (460 tph)	1 (0)
11	Crusher Tower	N/A	N/A	N/A	N/A	N/A	1 (0)
12	Coal Surge Bin w/ Vent Filter	Dual Outlet	172 tonne (190 ton)	181 tonne (200 ton)	200 tonne (220 ton)	209 tonne (230 ton)	2 (0)
13	Crusher	Impactor reduction	8 cm x 0 - 3 cm x 0 (3 in x 0 - 1-1/4 in x 0)	8 cm x 0 - 3 cm x 0 (3 in x 0 - 1-1/4 in x 0)	8 cm x 0 - 3 cm x 0 (3 in x 0 - 1-1/4 in x 0)	8 cm x 0 - 3 cm x 0 (3 in x 0 - 1-1/4 in x 0)	2 (0)
14	As-Fired Coal Sampling System	Swing Hammer	N/A	N/A	N/A	N/A	1 (1)
15	Conveyor No. 4	Belt w/tripper	345 tonne/hr (380 tph)	363 tonne/hr (400 tph)	390 tonne/hr (430 tph)	417 tonne/hr (460 tph)	1 (0)
16	Transfer Tower No. 2	Enclosed	N/A	N/A	N/A	N/A	1 (0)
17	Conveyor No. 5	Belt w/tripper	345 tonne/hr (380 tph)	363 tonne/hr (400 tph)	390 tonne/hr (430 tph)	417 tonne/hr (460 tph)	1 (0)
18	Coal Silo w/ Vent Filter and Slide Gates	Field Erected	726 tonne (800 ton)	816 tonne (900 ton)	907 tonne (1,000 ton)	907 tonne (1,000 ton)	3 (0)
19	Limestone Truck Unloading Hopper	N/A	36 tonne (40 ton)	36 tonne (40 ton)	36 tonne (40 ton)	36 tonne (40 ton)	1 (0)
20	Limestone Feeder	Belt	91 tonne/hr (100 tph)	91 tonne/hr (100 tph)	100 tonne/hr (110 tph)	109 tonne/hr (120 tph)	1 (0)
21	Limestone Conveyor No. L1	Belt	91 tonne/hr (100 tph)	91 tonne/hr (100 tph)	100 tonne/hr (110 tph)	109 tonne/hr (120 tph)	1 (0)
22	Limestone Reclaim Hopper	N/A	18 tonne (20 ton)	18 tonne (20 ton)	18 tonne (20 ton)	18 tonne (20 ton)	1 (0)
23	Limestone Reclaim Feeder	Belt	73 tonne/hr (80 tph)	73 tonne/hr (80 tph)	82 tonne/hr (90 tph)	82 tonne/hr (90 tph)	1 (0)
24	Limestone Conveyor No. L2	Belt	73 tonne/hr (80 tph)	73 tonne/hr (80 tph)	82 tonne/hr (90 tph)	82 tonne/hr (90 tph)	1 (0)
25	Limestone Day Bin	w/ actuator	281 tonne (310 ton)	299 tonne (330 ton)	318 tonne (350 ton)	336 tonne (370 ton)	2 (0)

ACCOUNT 2 COAL AND SORBENT PREPARATION AND FEED

Equipment No.	Description	Type	Design Condition				Opr Qty. (Spares)
			Case 1A	Case 1B	Case 1C	Case 1D	
1	Coal Feeder	Gravimetric	36 tonne/hr (40 tph)	36 tonne/hr (40 tph)	45 tonne/hr (50 tph)	45 tonne/hr (50 tph)	6 (0)
2	Coal Pulverizer	Ball type or eq.	36 tonne/hr (40 tph)	36 tonne/hr (40 tph)	45 tonne/hr (50 tph)	45 tonne/hr (50 tph)	6 (0)
3	Limestone Weigh Feeder	Gravimetric	23 tonne/hr (25 tph)	24 tonne/hr (27 tph)	26 tonne/hr (29 tph)	28 tonne/hr (31 tph)	1 (1)
4	Limestone Ball Mill	Rotary	23 tonne/hr (25 tph)	24 tonne/hr (27 tph)	26 tonne/hr (29 tph)	28 tonne/hr (31 tph)	1 (1)
5	Limestone Mill Slurry Tank with Agitator	N/A	87,064 liters (23,000 gal)	94,635 liters (25,000 gal)	98,421 liters (26,000 gal)	105,992 liters (28,000 gal)	1 (1)
6	Limestone Mill Recycle Pumps	Horizontal centrifugal	1,476 lpm @ 12m H_2O (390 gpm @ 40 ft H_2O)	1,552 lpm @ 12m H_2O (410 gpm @ 40 ft H_2O)	1,666 lpm @ 12m H_2O (440 gpm @ 40 ft H_2O)	1,779 lpm @ 12m H_2O (470 gpm @ 40 ft H_2O)	1 (1)
7	Hydroclone Classifier	4 active cyclones in a 5 cyclone bank	379 lpm (100 gpm) per cyclone	379 lpm (100 gpm) per cyclone	416 lpm (110 gpm) per cyclone	454 lpm (120 gpm) per cyclone	1 (1)
8	Distribution Box	2-way	N/A	N/A	N/A	N/A	1 (1)
9	Limestone Slurry Storage Tank with Agitator	Field erected	499,674 liters (132,000 gal)	533,743 liters (141,000 gal)	571,597 liters (151,000 gal)	609,451 liters (161,000 gal)	1 (1)
10	Limestone Slurry Feed Pumps	Horizontal centrifugal	1,022 lpm @ 9m H_2O (270 gpm @ 30 ft H_2O)	1,098 lpm @ 9m H_2O (290 gpm @ 30 ft H_2O)	1,173 lpm @ 9m H_2O (310 gpm @ 30 ft H_2O)	1,249 lpm @ 9m H_2O (330 gpm @ 30 ft H_2O)	1 (1)

ACCOUNT 3 FEEDWATER AND MISCELLANEOUS SYSTEMS AND EQUIPMENT

Equipment No.	Description	Type	Design Condition				Opr Qty. (Spares)
			Case 1A	Case 1B	Case 1C	Case 1D	
1	Demineralized Water Storage Tank	Vertical, cylindrical, outdoor	1,203,761 liters (318,000 gal)	1,290,825 liters (341,000 gal)	1,385,461 liters (366,000 gal)	1,468,740 liters (388,000 gal)	2 (0)
2	Condensate Pumps	Vertical canned	20,820 lpm @ 213 m H_2O (5,500 gpm @ 700 ft H_2O)	19,684 lpm @ 213 m H_2O (5,200 gpm @ 700 ft H_2O)	18,549 lpm @ 213 m H_2O (4,900 gpm @ 700 ft H_2O)	17,413 lpm @ 213 m H_2O (4,600 gpm @ 700 ft H_2O)	1 (1)
3	Deaerator and Storage Tank	Horizontal spray type	2,004,878 kg/hr (4,420,000 lb/hr), 5 min. tank	2,145,946 kg/hr (4,731,000 lb/hr), 5 min. tank	2,305,610 kg/hr (5,083,000 lb/hr), 5 min. tank	2,443,502 kg/hr (5,387,000 lb/hr), 5 min. tank	1 (0)
4	Boiler Feed Pump/Turbine	Barrel type, multi-stage, centrifugal	33,690 lpm @ 3,505 m H_2O (8,900 gpm @ 11,500 ft H_2O)	35,961 lpm @ 3,505 m H_2O (9,500 gpm @ 11,500 ft H_2O)	38,611 lpm @ 3,505 m H_2O (10,200 gpm @ 11,500 ft H_2O)	40,882 lpm @ 3,505 m H_2O (10,800 gpm @ 11,500 ft H_2O)	1 (1)
5	Startup Boiler Feed Pump, Electric Motor Driven	Barrel type, multi-stage, centrifugal	9,842 lpm @ 3,505 m H_2O (2,600 gpm @ 11,500 ft H_2O)	10,599 lpm @ 3,505 m H_2O (2,800 gpm @ 11,500 ft H_2O)	11,356 lpm @ 3,505 m H_2O (3,000 gpm @ 11,500 ft H_2O)	12,113 lpm @ 3,505 m H_2O (3,200 gpm @ 11,500 ft H_2O)	1 (0)
6	LP Feedwater Heater 1A/1B	Horizontal U-tube	625,957 kg/hr (1,380,000 lb/hr)	589,670 kg/hr (1,300,000 lb/hr)	548,847 kg/hr (1,210,000 lb/hr)	517,095 kg/hr (1,140,000 lb/hr)	2 (0)
7	LP Feedwater Heater 2A/2B	Horizontal U-tube	625,957 kg/hr (1,380,000 lb/hr)	589,670 kg/hr (1,300,000 lb/hr)	548,847 kg/hr (1,210,000 lb/hr)	517,095 kg/hr (1,140,000 lb/hr)	2 (0)
8	LP Feedwater Heater 3A/3B	Horizontal U-tube	625,957 kg/hr (1,380,000 lb/hr)	589,670 kg/hr (1,300,000 lb/hr)	548,847 kg/hr (1,210,000 lb/hr)	517,095 kg/hr (1,140,000 lb/hr)	2 (0)
9	LP Feedwater Heater 4A/4B	Horizontal U-tube	625,957 kg/hr (1,380,000 lb/hr)	589,670 kg/hr (1,300,000 lb/hr)	548,847 kg/hr (1,210,000 lb/hr)	517,095 kg/hr (1,140,000 lb/hr)	2 (0)
10	HP Feedwater Heater 6	Horizontal U-tube	2,004,878 kg/hr (4,420,000 lb/hr)	2,145,492 kg/hr (4,730,000 lb/hr)	2,304,249 kg/hr (5,080,000 lb/hr)	2,444,863 kg/hr (5,390,000 lb/hr)	1 (0)
11	HP Feedwater Heater 7	Horizontal U-tube	2,004,878 kg/hr (4,420,000 lb/hr)	2,145,492 kg/hr (4,730,000 lb/hr)	2,304,249 kg/hr (5,080,000 lb/hr)	2,444,863 kg/hr (5,390,000 lb/hr)	1 (0)
12	HP Feedwater heater 8	Horizontal U-tube	2,004,878 kg/hr (4,420,000 lb/hr)	2,145,492 kg/hr (4,730,000 lb/hr)	2,304,249 kg/hr (5,080,000 lb/hr)	2,444,863 kg/hr (5,390,000 lb/hr)	1 (0)

Equipment No.	Description	Type	Design Condition				Opr Qty. (Spares)
			Case 1A	Case 1B	Case 1C	Case 1D	
13	Auxiliary Boiler	Shop fabricated, water tube	18,144 kg/hr, 2.8 MPa, 343°C (40,000 lb/hr, 400 psig, 650°F)	18,144 kg/hr, 2.8 MPa, 343°C (40,000 lb/hr, 400 psig, 650°F)	18,144 kg/hr, 2.8 MPa, 343°C (40,000 lb/hr, 400 psig, 650°F)	18,144 kg/hr, 2.8 MPa, 343°C (40,000 lb/hr, 400 psig, 650°F)	1 (0)
14	Fuel Oil System	No. 2 fuel oil for light off	1,135,624 liter (300,000 gal)	1,135,624 liter (300,000 gal)	1,135,624 liter (300,000 gal)	1,135,624 liter (300,000 gal)	1 (0)
15	Service Air Compressors	Flooded Screw	28 m^3/min @ 0.7 MPa (1,000 scfm @ 100 psig)	28 m^3/min @ 0.7 MPa (1,000 scfm @ 100 psig)	28 m^3/min @ 0.7 MPa (1,000 scfm @ 100 psig)	28 m^3/min @ 0.7 MPa (1,000 scfm @ 100 psig)	2 (1)
16	Instrument Air Dryers	Duplex, regenerative	28 m^3/min (1,000 scfm)	28 m^3/min (1,000 scfm)	28 m^3/min (1,000 scfm)	28 m^3/min (1,000 scfm)	2 (1)
17	Closed Cycle Cooling Heat Exchangers	Shell and tube	53 GJ/hr (50 MMBtu/hr) each	53 GJ/hr (50 MMBtu/hr) each	53 GJ/hr (50 MMBtu/hr) each	53 GJ/hr (50 MMBtu/hr) each	2 (0)
18	Closed Cycle Cooling Water Pumps	Horizontal centrifugal	20,820 lpm @ 30 m H_2O (5,500 gpm @ 100 ft H_2O)	20,820 lpm @ 30 m H_2O (5,500 gpm @ 100 ft H_2O)	20,820 lpm @ 30 m H_2O (5,500 gpm @ 100 ft H_2O)	20,820 lpm @ 30 m H_2O (5,500 gpm @ 100 ft H_2O)	2 (1)
19	Engine-Driven Fire Pump	Vertical turbine, diesel engine	3,785 lpm @ 88 m H_2O (1,000 gpm @ 290 ft H_2O)	3,785 lpm @ 88 m H_2O (1,000 gpm @ 290 ft H_2O)	3,785 lpm @ 88 m H_2O (1,000 gpm @ 290 ft H_2O)	3,785 lpm @ 88 m H_2O (1,000 gpm @ 290 ft H_2O)	1 (1)
20	Fire Service Booster Pump	Two-stage horizontal centrifugal	2,650 lpm @ 64 m H_2O (700 gpm @ 210 ft H_2O)	2,650 lpm @ 64 m H_2O (700 gpm @ 210 ft H_2O)	2,650 lpm @ 64 m H_2O (700 gpm @ 210 ft H_2O)	2,650 lpm @ 64 m H_2O (700 gpm @ 210 ft H_2O)	1 (1)
21	Raw Water Pumps	Stainless steel, single suction	12,870 lpm @ 43 m H_2O (3,400 gpm @ 140 ft H_2O)	14,763 lpm @ 43 m H_2O (3,900 gpm @ 140 ft H_2O)	17,148 lpm @ 43 m H_2O (4,530 gpm @ 140 ft H_2O)	19,268 lpm @ 43 m H_2O (5,090 gpm @ 140 ft H_2O)	2 (1)
22	Filtered Water Pumps	Stainless steel, single suction	568 lpm @ 49 m H_2O (150 gpm @ 160 ft H_2O)	644 lpm @ 49 m H_2O (170 gpm @ 160 ft H_2O)	719 lpm @ 49 m H_2O (190 gpm @ 160 ft H_2O)	757 lpm @ 49 m H_2O (200 gpm @ 160 ft H_2O)	2 (1)
23	Filtered Water Tank	Vertical, cylindrical	560,241 liter (148,000 gal)	598,095 liter (158,000 gal)	681,374 liter (180,000 gal)	719,228 liter (190,000 gal)	1 (0)
24	Makeup Water Demineralizer	Multi-media filter, cartridge filter, RO membrane assembly, electrodeionization unit	719 lpm (190 gpm)	795 lpm (210 gpm)	871 lpm (230 gpm)	946 lpm (250 gpm)	1 (1)
25	Liquid Waste Treatment System	--	10 years, 24-hour storm	10 years, 24-hour storm	10 years, 24-hour storm	10 years, 24-hour storm	1 (0)

ACCOUNT 4 BOILER AND ACCESSORIES

Equipment No.	Description	Type	Design Condition				Opr Qty. (Spares)
			Case 1A	Case 1B	Case 1C	Case 1D	
1	Boiler	Supercritical, drum, wall-fired, low NOx burners, overfire air	2,004,878 kg/hr steam @ 25.5 MPa/602°C/602°C (4,420,000 lb/hr steam @ 3,700 psig/1,115°F/1,115°F)	2,145,492 kg/hr steam @ 25.5 MPa/602°C/602°C (4,730,000 lb/hr steam @ 3,700 psig/1,115°F/1,115°F)	2,304,249 kg/hr steam @ 25.5 MPa/602°C/602°C (5,080,000 lb/hr steam @ 3,700 psig/1,115°F/1,115°F)	2,444,863 kg/hr steam @ 25.5 MPa/602°C/602°C (5,390,000 lb/hr steam @ 3,700 psig/1,115°F/1,115°F)	1 (0)
2	Primary Air Fan	Centrifugal	262,630 kg/hr, 3,585 m^3/min @ 123 cm WG (579,000 lb/hr, 126,600 acfm @ 48 in. WG)	281,227 kg/hr, 3,840 m^3/min @ 123 cm WG (620,000 lb/hr, 135,600 acfm @ 48 in. WG)	302,546 kg/hr, 4,126 m^3/min @ 123 cm WG (667,000 lb/hr, 145,700 acfm @ 48 in. WG)	320,236 kg/hr, 4,372 m^3/min @ 123 cm WG (706,000 lb/hr, 154,400 acfm @ 48 in. WG)	2 (0)
3	Forced Draft Fan	Centrifugal	855,475 kg/hr, 11,672 m^3/min @ 51 cm WG (1,886,000 lb/hr, 412,200 acfm @ 20 in. WG)	915,803 kg/hr, 12,496 m^3/min @ 51 cm WG (2,019,000 lb/hr, 441,300 acfm @ 20 in. WG)	984,295 kg/hr, 13,425 m^3/min @ 51 cm WG (2,170,000 lb/hr, 474,100 acfm @ 20 in. WG)	1,043,262 kg/hr, 14,232 m^3/min @ 51 cm WG (2,300,000 lb/hr, 502,600 acfm @ 20 in. WG)	2 (0)
4	Induced Draft Fan	Centrifugal	1,243,750 kg/hr, 26,618 m^3/min @ 91 cm WG (2,742,000 lb/hr, 940,000 acfm @ 36 in. WG)	1,331,294 kg/hr, 28,495 m^3/min @ 91 cm WG (2,935,000 lb/hr, 1,006,300 acfm @ 36 in. WG)	1,430,630 kg/hr, 30,619 m^3/min @ 91 cm WG (3,154,000 lb/hr, 1,081,300 acfm @ 36 in. WG)	1,516,359 kg/hr, 32,454 m^3/min @ 91 cm WG (3,343,000 lb/hr, 1,146,100 acfm @ 36 in. WG)	2 (0)

Equipment No.	Description	Type	Design Condition				Opr Qty. (Spares)
			Case 1A	Case 1B	Case 1C	Case 1D	
5	SCR Reactor Vessel	Space for spare layer	2,485,686 kg/hr (5,480,000 lb/hr)	2,662,587 kg/hr (5,870,000 lb/hr)	2,862,168 kg/hr (6,310,000 lb/hr)	3,034,533 kg/hr (6,690,000 lb/hr)	2 (0)
6	SCR Catalyst	--	--	--	--	--	3 (0)
7	Dilution Air Blower	Centrifugal	45 m^3/min @ 108 cm WG (1,600 acfm @ 42 in. WG)	48 m^3/min @ 108 cm WG (1,700 acfm @ 42 in. WG)	51 m^3/min @ 108 cm WG (1,800 acfm @ 42 in. WG)	54 m^3/min @ 108 cm WG (1,900 acfm @ 42 in. WG)	2 (1)
8	Ammonia Storage	Horizontal tank	49,210 liter (13,000 gal)	52,996 liter (14,000 gal)	56,781 liter (15,000 gal)	60,567 liter (16,000 gal)	5 (0)
9	Ammonia Feed Pump	Centrifugal	9 lpm @ 91 m H_2O (2 gpm @ 300 ft H_2O)	10 lpm @ 91 m H_2O (3 gpm @ 300 ft H_2O)	11 lpm @ 91 m H_2O (3 gpm @ 300 ft H_2O)	11 lpm @ 91 m H_2O (3 gpm @ 300 ft H_2O)	2 (1)

ACCOUNT 5 FLUE GAS CLEANUP

Equipment No.	Description	Type	Design Condition				Opr Qty. (Spares)
			Case 1A	Case 1B	Case 1C	Case 1D	
1	Fabric Filter	Single stage, high-ratio with pulse-jet online cleaning system	1,243,750 kg/hr (2,742,000 lb/hr) 99.8% efficiency	1,331,294 kg/hr (2,935,000 lb/hr) 99.8% efficiency	1,430,630 kg/hr (3,154,000 lb/hr) 99.8% efficiency	1,516,359 kg/hr (3,343,000 lb/hr) 99.8% efficiency	2 (0)
2	Absorber Module	Counter-current open spray	41,059 m^3/min (1,450,000 acfm)	43,948 m^3/min (1,552,000 acfm)	47,233 m^3/min (1,668,000 acfm)	50,064 m^3/min (1,768,000 acfm)	1 (0)
3	Recirculation Pumps	Horizontal centrifugal	143,846 lpm @ 64 m H_2O (38,000 gpm @ 210 ft H_2O)	151,416 lpm @ 64 m H_2O (40,000 gpm @ 210 ft H_2O)	162,773 lpm @ 64 m H_2O (43,000 gpm @ 210 ft H_2O)	174,129 lpm @ 64 m H_2O (46,000 gpm @ 210 ft H_2O)	5 (1)
4	Bleed Pumps	Horizontal centrifugal	4,505 lpm (1,190 gpm) at 20 wt% solids	4,807 lpm (1,270 gpm) at 20 wt% solids	5,148 lpm (1,360 gpm) at 20 wt% solids	5,489 lpm (1,450 gpm) at 20 wt% solids	2 (1)
5	Oxidation Air Blowers	Centrifugal	184 m^3/min @ 0.3 MPa (6,500 acfm @ 42 psia)	194 m^3/min @ 0.3 MPa (6,860 acfm @ 42 psia)	211 m^3/min @ 0.3 MPa (7,440 acfm @ 42 psia)	224 m^3/min @ 0.3 MPa (7,910 acfm @ 42 psia)	2 (1)
6	Agitators	Side entering	50 hp	50 hp	50 hp	50 hp	5 (1)
7	Dewatering Cyclones	Radial assembly, 5 units each	1,136 lpm (300 gpm) per cyclone	1,211 lpm (320 gpm) per cyclone	1,287 lpm (340 gpm) per cyclone	1,363 lpm (360 gpm) per cyclone	2 (0)
8	Vacuum Filter Belt	Horizontal belt	35 tonne/hr (39 tph) of 50 wt % slurry	38 tonne/hr (42 tph) of 50 wt % slurry	41 tonne/hr (45 tph) of 50 wt % slurry	44 tonne/hr (48 tph) of 50 wt % slurry	2 (1)
9	Filtrate Water Return Pumps	Horizontal centrifugal	681 lpm @ 12 m H_2O (180 gpm @ 40 ft H_2O)	719 lpm @ 12 m H_2O (190 gpm @ 40 ft H_2O)	795 lpm @ 12 m H_2O (210 gpm @ 40 ft H_2O)	833 lpm @ 12 m H_2O (220 gpm @ 40 ft H_2O)	1 (1)
10	Filtrate Water Return Storage Tank	Vertical, lined	454,249 lpm (120,000 gal)	492,104 lpm (130,000 gal)	529,958 lpm (140,000 gal)	529,958 lpm (140,000 gal)	1 (1)
11	Process Makeup Water Pumps	Horizontal centrifugal	454 lpm @ 21 m H_2O (120 gpm @ 70 ft H_2O)	492 lpm @ 21 m H_2O (130 gpm @ 70 ft H_2O)	530 lpm @ 21 m H_2O (140 gpm @ 70 ft H_2O)	568 lpm @ 21 m H_2O (150 gpm @ 70 ft H_2O)	1 (1)

ACCOUNT 5B CARBON DIOXIDE RECOVERY

Equipment No.	Description	Type	Design Condition				Opr Qty. (Spares)
			Case 1A	Case 1B	Case 1C	Case 1D*	
1	Econamine FG Plus	Amine-based CO_2 capture technology	876,340 kg/h (1,932,000 lb/h) 20.6 wt % CO_2 concentration	1,566,708 kg/h (3,454,000 lb/h) 20.6 wt % CO_2 concentration	2,355,505 kg/h (5,193,000 lb/h) 20.6 wt % CO_2 concentration	1,514,999 kg/h (3,340,000 lb/h) 20.6 wt % CO_2 concentration	1 (0)
2	Econamine Condensate Pump	Centrifugal	3,899 lpm @ 52 m H_2O (1,030 gpm @ 170 ft H_2O)	7,003 lpm @ 52 m H_2O (1,850 gpm @ 170 ft H_2O)	10,448 lpm @ 52 m H_2O (2,760 gpm @ 170 ft H_2O)	13,438 lpm @ 52 m H_2O (3,550 gpm @ 170 ft H_2O)	1 (1)
3	CO_2 Compressor	Centrifugal	161,385 kg/h @ 15.3 MPa (355,793 lb/h @ 2,215 psia)	290,084 kg/h @ 15.3 MPa (639,526 lb/h @ 2,215 psia)	434,206 kg/h @ 15.3 MPa (957,260 lb/h @ 2,215 psia)	279,530 kg/h @ 15.3 MPa (616,257 lb/h @ 2,215 psia)	1 (0)

* Case 1D is equipped with two operating CO_2 absorption and compression trains, which is reflected in the design conditions.

ACCOUNT 6 COMBUSTION TURBINE/ACCESSORIES

N/A

ACCOUNT 7 DUCTING AND STACK

Equipment No.	Description	Type	Design Condition				Opr Qty. (Spares)
			Case 1A	Case 1B	Case 1C	Case 1D	
1	Stack	Reinforced concrete with FRP liner	152 m (500 ft) high x 5.7 m (19 ft) diameter	152 m (500 ft) high x 5.6 m (19 ft) diameter	152 m (500 ft) high x 5.6 m (18 ft) diameter	152 m (500 ft) high x 5.6 m (18 ft) diameter	1 (0)

ACCOUNT 8 STEAM TURBINE GENERATOR

Equipment No.	Description	Type	Design Condition				Opr Qty. (Spares)
			Case 1A	Case 1B	Case 1C	Case 1D	
1	Steam Turbine Generator	Commercially available, advanced steam turbine	633 MW 24.1 MPa/593°C/593°C (3500 psig/ 1100°F/1100°F)	651 MW 24.1 MPa/593°C/593°C (3500 psig/ 1100°F/1100°F)	671 MW 24.1 MPa/593°C/593°C (3500 psig/ 1100°F/1100°F)	689 MW 24.1 MPa/593°C/593°C (3500 psig/ 1100°F/1100°F)	1 (0)
2	Steam Turbine Generator	Hydrogen cooled, static excitation	700 MVA @ 0.9 p.f., 24 kV, 60 Hz, 3-phase	720 MVA @ 0.9 p.f., 24 kV, 60 Hz, 3-phase	750 MVA @ 0.9 p.f., 24 kV, 60 Hz, 3-phase	770 MVA @ 0.9 p.f., 24 kV, 60 Hz, 3-phase	1 (0)
3	Surface Condenser	Single pass, divided waterbox including vacuum pumps	2,384 GJ/hr (2,260 MMBtu/hr), Inlet water temperature 16°C (60°F), Water temperature rise 11°C (20°F)	2,237 GJ/hr (2,120 MMBtu/hr), Inlet water temperature 16°C (60°F), Water temperature rise 11°C (20°F)	2,089 GJ/hr (1,980 MMBtu/hr), Inlet water temperature 16°C (60°F), Water temperature rise 11°C (20°F)	1,962 GJ/hr (1,860 MMBtu/hr), Inlet water temperature 16°C (60°F), Water temperature rise 11°C (20°F)	1 (0)

ACCOUNT 9 COOLING WATER SYSTEM

Equipment No.	Description	Type	Design Condition				Opr Qty. (Spares)
			Case 1A	Case 1B	Case 1C	Case 1D	
1	Circulating Water Pumps	Vertical, wet pit	583,000 lpm @ 30 m (154,000 gpm @ 100 ft)	673,800 lpm @ 30 m (178,000 gpm @ 100 ft)	829,000 lpm @ 30 m (219,000 gpm @ 100 ft)	965,300 lpm @ 30 m (255,000 gpm @ 100 ft)	2 (1)
2	Cooling Tower	Evaporative, mechanical draft, multi-cell	11°C (51.5°F) wet bulb / 16°C (60°F) CWT / 27°C (80°F) HWT / 3260 GJ/hr (3090 MMBtu/hr) heat duty	11°C (51.5°F) wet bulb / 16°C (60°F) CWT / 27°C (80°F) HWT / 3756 GJ/hr (3560 MMBtu/hr) heat duty	11°C (51.5°F) wet bulb / 16°C (60°F) CWT / 27°C (80°F) HWT / 4621 GJ/hr (4380 MMBtu/hr) heat duty	11°C (51.5°F) wet bulb / 16°C (60°F) CWT / 27°C (80°F) HWT / 5370 GJ/hr (5090 MMBtu/hr) heat duty	1 (0)

ACCOUNT 10 ASH/SPENT SORBENT RECOVERY AND HANDLING

Equipment No.	Description	Type	Design Condition				Opr Qty. (Spares)
			Case 1A	Case 1B	Case 1C	Case 1D	
1	Economizer Hopper (part of boiler scope of supply)	--	--	--	--	--	4 (0)
2	Bottom Ash Hopper (part of boiler scope of supply)	--	--	--	--	--	2 (0)
3	Clinker Grinder	--	4.5 tonne/hr (5 tph)	4.5 tonne/hr (5 tph)	5.4 tonne/hr (6 tph)	5.4 tonne/hr (6 tph)	1 (1)
4	Pyrites Hopper (part of pulverizer scope of supply included with boiler)	--	--	--	--	--	6 (0)
5	Hydroejectors	--	--	--	--	--	12 (0)
6	Economizer/Pyrites Transfer Tank	--	--	--	--	--	1 (0)
7	Ash Sluice Pumps	Vertical, wet pit	189 lpm @ 17 m H_2O (50 gpm @ 56 ft H_2O)	189 lpm @ 17 m H_2O (50 gpm @ 56 ft H_2O)	189 lpm @ 17 m H_2O (50 gpm @ 56 ft H_2O)	227 lpm @ 17 m H_2O (60 gpm @ 56 ft H_2O)	1 (1)
8	Ash Seal Water Pumps	Vertical, wet pit	7,571 lpm @ 9 m H_2O (2000 gpm @ 28 ft H_2O)	7,571 lpm @ 9 m H_2O (2000 gpm @ 28 ft H_2O)	7,571 lpm @ 9 m H_2O (2000 gpm @ 28 ft H_2O)	7,571 lpm @ 9 m H_2O (2000 gpm @ 28 ft H_2O)	1 (1)
9	Hydrobins	--	189 lpm (50 gpm)	189 lpm (50 gpm)	189 lpm (50 gpm)	227 lpm (60 gpm)	1 (1)
10	Baghouse Hopper (part of baghouse scope of supply)	--	--	--	--	--	24 (0)
11	Air Heater Hopper (part of boiler scope of supply)	--	--	--	--	--	10 (0)
12	Air Blower	--	16 m^3/min @ 0.2 MPa (570 scfm @ 24 psi)	17 m^3/min @ 0.2 MPa (610 scfm @ 24 psi)	19 m^3/min @ 0.2 MPa (660 scfm @ 24 psi)	20 m^3/min @ 0.2 MPa (690 scfm @ 24 psi)	1 (1)
13	Fly Ash Silo	Reinforced concrete	544 tonne (1,200 ton)	590 tonne (1,300 ton)	590 tonne (1,300 ton)	635 tonne (1,400 ton)	2 (0)
14	Slide Gate Valves	--	--	--	--	--	2 (0)
15	Unloader	--	--	--	--	--	1 (0)
16	Telescoping Unloading Chute	--	100 tonne/hr (110 tph)	109 tonne/hr (120 tph)	118 tonne/hr (130 tph)	118 tonne/hr (130 tph)	1 (0)

ACCOUNT 11 ACCESSORY ELECTRIC PLANT

Equipment No.	Description	Type	Design Condition				Opr Qty. (Spares)
			Case 1A	Case 1B	Case 1C	Case 1D	
1	STG Transformer	Oil-filled	24 kV/345 kV, 650 MVA, 3-ph, 60 Hz	24 kV/345 kV, 650 MVA, 3-ph, 60 Hz	24 kV/345 kV, 650 MVA, 3-ph, 60 Hz	24 kV/345 kV, 650 MVA, 3-ph, 60 Hz	1 (0)
2	Auxiliary Transformer	Oil-filled	24 kV/4.16 kV, 55 MVA, 3-ph, 60 Hz	24 kV/4.16 kV, 74 MVA, 3-ph, 60 Hz	24 kV/4.16 kV, 95 MVA, 3-ph, 60 Hz	24 kV/4.16 kV, 114 MVA, 3-ph, 60 Hz	1 (1)
3	Low Voltage Transformer	Dry ventilated	4.16 kV/480 V, 8 MVA, 3-ph, 60 Hz	4.16 kV/480 V, 11 MVA, 3-ph, 60 Hz	4.16 kV/480 V, 14 MVA, 3-ph, 60 Hz	4.16 kV/480 V, 17 MVA, 3-ph, 60 Hz	1 (1)
4	STG Isolated Phase Bus Duct and Tap Bus	Aluminum, self-cooled	24 kV, 3-ph, 60 Hz	24 kV, 3-ph, 60 Hz	24 kV, 3-ph, 60 Hz	24 kV, 3-ph, 60 Hz	1 (0)
5	Medium Voltage Switchgear	Metal Clad	4.16 kV, 3-ph, 60 Hz	4.16 kV, 3-ph, 60 Hz	4.16 kV, 3-ph, 60 Hz	4.16 kV, 3-ph, 60 Hz	1 (1)
6	Low Voltage Switchgear	Metal Enclosed	480 V, 3-ph, 60 Hz	480 V, 3-ph, 60 Hz	480 V, 3-ph, 60 Hz	480 V, 3-ph, 60 Hz	1 (1)
7	Emergency Diesel Generator	Sized for emergency shutdown	750 kW, 480 V, 3-ph, 60 Hz	750 kW, 480 V, 3-ph, 60 Hz	750 kW, 480 V, 3-ph, 60 Hz	750 kW, 480 V, 3-ph, 60 Hz	1 (0)

ACCOUNT 12 INSTRUMENTATION AND CONTROL

Equipment No.	Description	Type	Design Condition				Opr Qty. (Spares)
			Case 1A	Case 1B	Case 1C	Case 1D	
1	DCS - Main Control	Monitor/keyboard; Operator printer (laser color); Engineering printer (laser B&W)	Operator Stations/Printers and Engineering Stations/Printers	Operator Stations/Printers and Engineering Stations/Printers	Operator Stations/Printers and Engineering Stations/Printers	Operator Stations/Printers and Engineering Stations/Printers	1 (0)
2	DCS - Processor	Microprocessor with redundant input/output	N/A	N/A	N/A	N/A	1 (0)
3	DCS - Data Highway	Fiber optic	Fully redundant, 25% spare	Fully redundant, 25% spare	Fully redundant, 25% spare	Fully redundant, 25% spare	1 (0)

This page intentionally left blank

3.2.2 Full CO_2 Capture Performance Results

A process block flow diagram for Cases 1E through 1G is shown in Exhibit 3-35. These cases represent supercritical steam cycles with CO_2 capture ranging from 90 percent to 99 percent. The corresponding stream tables are contained in Exhibit 3-36, Exhibit 3-37, and Exhibit 3-38 for 90 percent, 95 percent, and 99 percent CO_2 capture, respectively.

Overall performance for Cases 1E through 1G is summarized in Exhibit 3-39 which includes auxiliary power requirements.

Material and energy balance information, environmental performance and a major equipment list are summarized in Sections 3.2.2.1 and 3.2.2.2.

Exhibit 3-35 Cases 1E through 1G Process Block Flow Diagram, Supercritical PC with CO_2 Capture

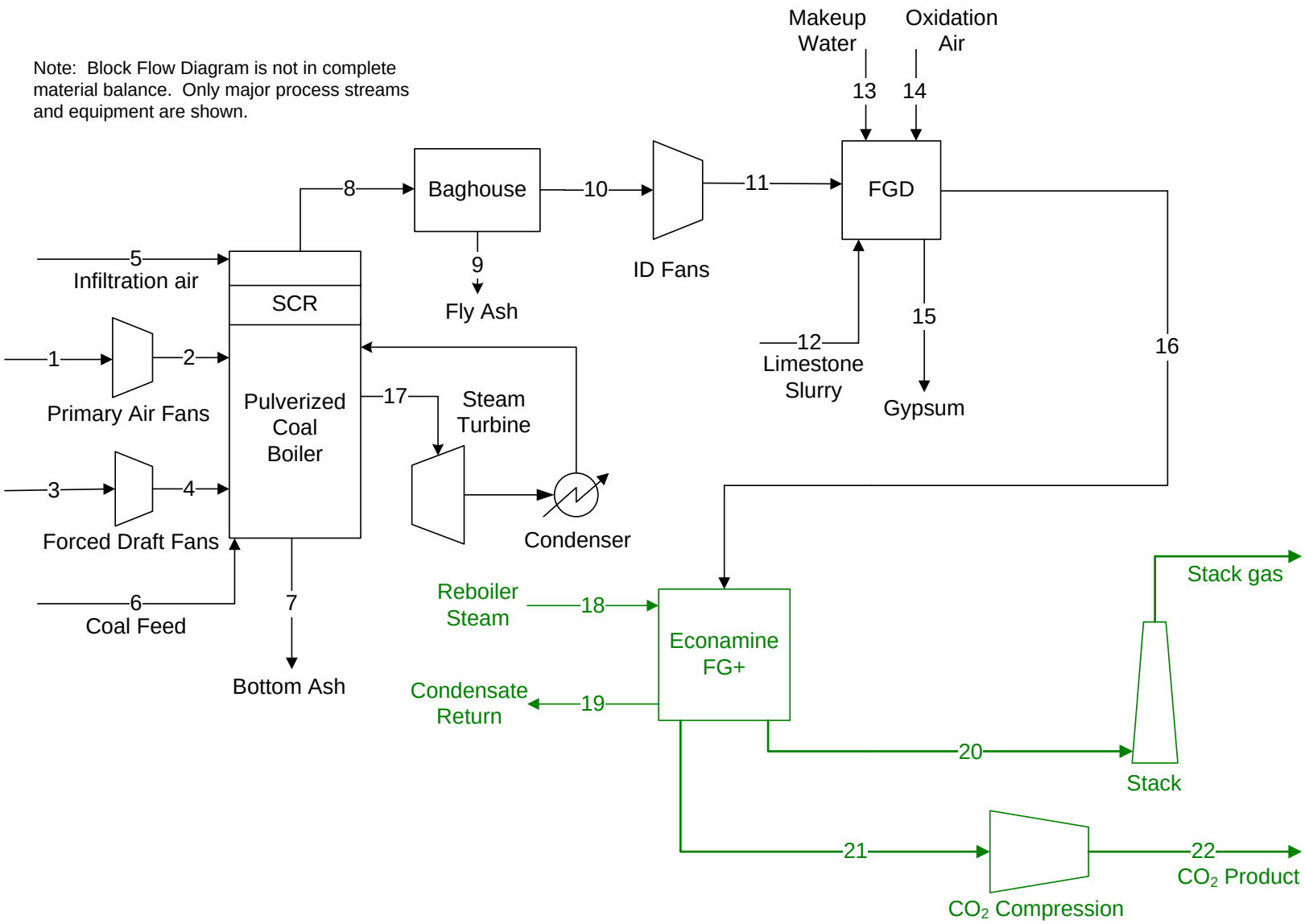

Exhibit 3-36 Case 1E Stream Table, Supercritical PC with 90% CO_2 Capture

	1	2	3	4	5	6	7	8	9	10	11
V-L Mole Fraction											
Ar	0.0092	0.0092	0.0092	0.0092	0.0092	0.0000	0.0000	0.0087	0.0000	0.0087	0.0087
CO_2	0.0003	0.0003	0.0003	0.0003	0.0003	0.0000	0.0000	0.1450	0.0000	0.1450	0.1450
H_2	0.0000	0.0000	0.0000	0.0000	0.0000	0.0000	0.0000	0.0000	0.0000	0.0000	0.0000
H_2O	0.0099	0.0099	0.0099	0.0099	0.0099	0.0000	0.0000	0.0870	0.0000	0.0870	0.0870
N_2	0.7732	0.7732	0.7732	0.7732	0.7732	0.0000	0.0000	0.7324	0.0000	0.7324	0.7324
O_2	0.2074	0.2074	0.2074	0.2074	0.2074	0.0000	0.0000	0.0247	0.0000	0.0247	0.0247
SO_2	0.0000	0.0000	0.0000	0.0000	0.0000	0.0000	0.0000	0.0021	0.0000	0.0021	0.0021
Total	1.0000	1.0000	1.0000	1.0000	1.0000	0.0000	0.0000	1.0000	0.0000	1.0000	1.0000
V-L Flowrate (kg_{mol}/hr)	67,188	67,188	20,639	20,639	1,757	0	0	94,760	0	94,760	94,760
V-L Flowrate (kg/hr)	1,938,845	1,938,845	595,593	595,593	50,689	0	0	2,818,469	0	2,818,469	2,818,469
Solids Flowrate (kg/hr)	0	0	0	0	0	258,399	5,011	20,045	20,045	0	0
Temperature (°C)	15	19	15	25	15	15	15	177	15	177	188
Pressure (MPa, abs)	0.10	0.11	0.10	0.11	0.10	0.10	0.10	0.10	0.10	0.10	0.11
Enthalpy (kJ/kg)[A]	30.23	34.36	30.23	40.78	30.23	---	---	335.07	---	316.66	328.98
Density (kg/m^3)	1.2	1.3	1.2	1.3	1.2	---	---	0.8	---	0.8	0.8
V-L Molecular Weight	28.857	28.857	28.857	28.857	28.857	---	---	29.743	---	29.743	29.743
V-L Flowrate (lb_{mol}/hr)	148,124	148,124	45,502	45,502	3,873	0	0	208,911	0	208,911	208,911
V-L Flowrate (lb/hr)	4,274,421	4,274,421	1,313,058	1,313,058	111,750	0	0	6,213,660	0	6,213,660	6,213,660
Solids Flowrate (lb/hr)	0	0	0	0	0	569,672	11,048	44,192	44,192	0	0
Temperature (°F)	59	66	59	78	59	59	59	350	59	350	371
Pressure (psia)	14.7	15.3	14.7	16.1	14.7	14.7	14.7	14.4	14.7	14.2	15.3
Enthalpy (Btu/lb)[A]	13.0	14.8	13.0	17.5	13.0	---	---	144.1	---	136.1	141.4
Density (lb/ft^3)	0.076	0.078	0.076	0.081	0.076	---	---	0.049	---	0.049	0.051

A - Reference conditions are 32.02 F & 0.089 PSIA

Exhibit 3-36 Case 1E Stream Table, Supercritical PC with 90% CO2 Capture (continued)

	12	13	14	15	16	17	18	19	20	21	22
V-L Mole Fraction											
Ar	0.0000	0.0000	0.0092	0.0000	0.0081	0.0000	0.0000	0.0000	0.0108	0.0000	0.0000
CO_2	0.0000	0.0000	0.0003	0.0004	0.1347	0.0000	0.0000	0.0000	0.0179	0.9874	1.0000
H_2	0.0000	0.0000	0.0000	0.0000	0.0000	0.0000	0.0000	0.0000	0.0000	0.0000	0.0000
H_2O	1.0000	1.0000	0.0099	0.9996	0.1549	1.0000	1.0000	1.0000	0.0381	0.0126	0.0000
N_2	0.0000	0.0000	0.7732	0.0000	0.6785	0.0000	0.0000	0.0000	0.9016	0.0000	0.0000
O_2	0.0000	0.0000	0.2074	0.0000	0.0238	0.0000	0.0000	0.0000	0.0316	0.0000	0.0000
SO_2	0.0000	0.0000	0.0000	0.0000	0.0000	0.0000	0.0000	0.0000	0.0000	0.0000	0.0000
Total	1.0000	1.0000	1.0000	1.0000	1.0000	1.0000	1.0000	1.0000	1.0000	1.0000	1.0000
V-L Flowrate (kg_{mol}/hr)	3,416	13,737	1,071	249	103,518	126,037	44,254	44,254	77,899	12,707	12,547
V-L Flowrate (kg/hr)	61,544	247,481	30,902	4,494	2,982,488	2,270,587	797,253	797,253	2,194,649	555,084	552,194
Solids Flowrate (kg/hr)	26,140	0	0	40,408	0	0	0	0	0	0	0
Temperature (°C)	15	15	18	58	58	593	291	151	32	21	35
Pressure (MPa, abs)	0.10	0.10	0.10	0.10	0.10	24.23	0.51	0.92	0.10	0.16	15.27
Enthalpy (kJ/kg)[A]	---	62.80	32.81	---	303.64	3,477.66	3,046.14	637.34	93.55	28.23	-212.35
Density (kg/m^3)	---	1,003.1	1.2	---	1.1	69.2	2.0	916.0	1.1	2.9	794.3
V-L Molecular Weight	---	18.015	28.857	---	28.811	18.015	18.015	18.015	28.173	43.682	44.010
V-L Flowrate (lb_{mol}/hr)	7,531	30,286	2,361	550	228,218	277,863	97,564	97,564	171,737	28,015	27,662
V-L Flowrate (lb/hr)	135,681	545,602	68,127	9,907	6,575,262	5,005,788	1,757,642	1,757,642	4,838,373	1,223,750	1,217,380
Solids Flowrate (lb/hr)	57,629	0	0	89,085	0	0	0	0	0	0	0
Temperature (°F)	59	59	64	136	136	1,100	556	304	89	69	95
Pressure (psia)	15.0	14.7	15.0	14.8	14.8	3,514.7	73.5	133.6	14.8	23.5	2,214.5
Enthalpy (Btu/lb)[A]	---	27.0	14.1	---	130.5	1,495.1	1,309.6	274.0	40.2	12.1	-91.3
Density (lb/ft^3)	---	62.622	0.077	---	0.067	4.319	0.123	57.184	0.071	0.183	49.586

A - Reference conditions are 32.02 F & 0.089 PSIA

Exhibit 3-37 Case 1F Stream Table, Supercritical PC with 95% CO_2 Capture

	1	2	3	4	5	6	7	8	9	10	11
V-L Mole Fraction											
Ar	0.0092	0.0092	0.0092	0.0092	0.0092	0.0000	0.0000	0.0087	0.0000	0.0087	0.0087
CO_2	0.0003	0.0003	0.0003	0.0003	0.0003	0.0000	0.0000	0.1450	0.0000	0.1450	0.1450
H_2	0.0000	0.0000	0.0000	0.0000	0.0000	0.0000	0.0000	0.0000	0.0000	0.0000	0.0000
H_2O	0.0099	0.0099	0.0099	0.0099	0.0099	0.0000	0.0000	0.0870	0.0000	0.0870	0.0870
N_2	0.7732	0.7732	0.7732	0.7732	0.7732	0.0000	0.0000	0.7324	0.0000	0.7324	0.7324
O_2	0.2074	0.2074	0.2074	0.2074	0.2074	0.0000	0.0000	0.0247	0.0000	0.0247	0.0247
SO_2	0.0000	0.0000	0.0000	0.0000	0.0000	0.0000	0.0000	0.0021	0.0000	0.0021	0.0021
Total	1.0000	1.0000	1.0000	1.0000	1.0000	0.0000	0.0000	1.0000	0.0000	1.0000	1.0000
V-L Flowrate (kg_{mol}/hr)	68,946	68,946	21,180	21,180	1,803	0	0	97,240	0	97,240	97,240
V-L Flowrate (kg/hr)	1,989,579	1,989,579	611,178	611,178	52,015	0	0	2,892,220	0	2,892,220	2,892,220
Solids Flowrate (kg/hr)	0	0	0	0	0	265,160	5,142	20,570	20,570	0	0
Temperature (°C)	15	19	15	25	15	15	15	177	15	177	188
Pressure (MPa, abs)	0.10	0.11	0.10	0.11	0.10	0.10	0.10	0.10	0.10	0.10	0.11
Enthalpy (kJ/kg)[A]	30.23	34.36	30.23	40.78	30.23	---	---	335.07	---	316.66	328.98
Density (kg/m^3)	1.2	1.3	1.2	1.3	1.2	---	---	0.8	---	0.8	0.8
V-L Molecular Weight	28.857	28.857	28.857	28.857	28.857	---	---	29.743	---	29.743	29.743
V-L Flowrate (lb_{mol}/hr)	152,000	152,000	46,693	46,693	3,974	0	0	214,378	0	214,378	214,378
V-L Flowrate (lb/hr)	4,386,271	4,386,271	1,347,417	1,347,417	114,674	0	0	6,376,254	0	6,376,254	6,376,254
Solids Flowrate (lb/hr)	0	0	0	0	0	584,578	11,337	45,348	45,348	0	0
Temperature (°F)	59	66	59	78	59	59	59	350	59	350	371
Pressure (psia)	14.7	15.3	14.7	16.1	14.7	14.7	14.7	14.4	14.7	14.2	15.3
Enthalpy (Btu/lb)[A]	13.0	14.8	13.0	17.5	13.0	---	---	144.1	---	136.1	141.4
Density (lb/ft^3)	0.076	0.078	0.076	0.081	0.076	---	---	0.049	---	0.049	0.051

A - Reference conditions are 32.02 F & 0.089 PSIA

Exhibit 3-37 Case 1F Stream Table, Supercritical PC with 95% CO2 Capture (continued)

	12	13	14	15	16	17	18	19	20	21	22
V-L Mole Fraction											
Ar	0.0000	0.0000	0.0092	0.0000	0.0081	0.0000	0.0000	0.0000	0.0109	0.0000	0.0000
CO_2	0.0000	0.0000	0.0003	0.0004	0.1347	0.0000	0.0000	0.0000	0.0090	0.9880	1.0000
H_2	0.0000	0.0000	0.0000	0.0000	0.0000	0.0000	0.0000	0.0000	0.0000	0.0000	0.0000
H_2O	1.0000	1.0000	0.0099	0.9996	0.1550	1.0000	1.0000	1.0000	0.0381	0.0120	0.0000
N_2	0.0000	0.0000	0.7732	0.0000	0.6785	0.0000	0.0000	0.0000	0.9101	0.0000	0.0000
O_2	0.0000	0.0000	0.2074	0.0000	0.0238	0.0000	0.0000	0.0000	0.0319	0.0000	0.0000
SO_2	0.0000	0.0000	0.0000	0.0000	0.0000	0.0000	0.0000	0.0000	0.0000	0.0000	0.0000
Total	1.0000	1.0000	1.0000	1.0000	1.0000	1.0000	1.0000	1.0000	1.0000	1.0000	1.0000
V-L Flowrate (kg_{mol}/hr)	3,444	14,163	1,100	256	106,227	129,327	48,990	48,990	79,194	13,755	13,591
V-L Flowrate (kg/hr)	62,046	255,146	31,733	4,612	3,060,557	2,329,868	882,562	882,562	2,220,106	601,089	598,124
Solids Flowrate (kg/hr)	26,844	0	0	41,485	0	0	0	0	0	0	0
Temperature (°C)	15	15	18	58	58	593	291	151	32	21	35
Pressure (MPa, abs)	0.10	0.10	0.10	0.10	0.10	24.23	0.51	0.92	0.10	0.16	15.27
Enthalpy (kJ/kg)[A]	---	62.80	32.81	---	303.64	3,477.66	3,046.14	637.34	93.94	27.89	-212.35
Density (kg/m^3)	---	1,003.1	1.2	---	1.1	69.2	2.0	916.0	1.1	2.9	794.3
V-L Molecular Weight	---	18.015	28.857	---	28.811	18.015	18.015	18.015	28.034	43.699	44.010
V-L Flowrate (lb_{mol}/hr)	7,593	31,223	2,424	564	234,191	285,118	108,004	108,004	174,593	30,325	29,962
V-L Flowrate (lb/hr)	136,788	562,500	69,960	10,168	6,747,374	5,136,479	1,945,717	1,945,717	4,894,497	1,325,174	1,318,637
Solids Flowrate (lb/hr)	59,180	0	0	91,460	0	0	0	0	0	0	0
Temperature (°F)	59	59	64	136	136	1,100	556	304	89	69	95
Pressure (psia)	15.0	14.7	15.0	14.8	14.8	3,514.7	73.5	133.6	14.8	23.5	2,214.5
Enthalpy (Btu/lb)[A]	---	27.0	14.1	---	130.5	1,495.1	1,309.6	274.0	40.4	12.0	-91.3
Density (lb/ft^3)	---	62.622	0.077	---	0.067	4.319	0.123	57.184	0.070	0.183	49.586

A - Reference conditions are 32.02 F & 0.089 PSIA

Exhibit 3-38 Case 1G Stream Table, Supercritical PC with 99% CO_2 Capture

	1	2	3	4	5	6	7	8	9	10	11
V-L Mole Fraction											
Ar	0.0092	0.0092	0.0092	0.0092	0.0092	0.0000	0.0000	0.0087	0.0000	0.0087	0.0087
CO_2	0.0003	0.0003	0.0003	0.0003	0.0003	0.0000	0.0000	0.1450	0.0000	0.1450	0.1450
H_2	0.0000	0.0000	0.0000	0.0000	0.0000	0.0000	0.0000	0.0000	0.0000	0.0000	0.0000
H_2O	0.0099	0.0099	0.0099	0.0099	0.0099	0.0000	0.0000	0.0870	0.0000	0.0870	0.0870
N_2	0.7732	0.7732	0.7732	0.7732	0.7732	0.0000	0.0000	0.7324	0.0000	0.7324	0.7324
O_2	0.2074	0.2074	0.2074	0.2074	0.2074	0.0000	0.0000	0.0247	0.0000	0.0247	0.0247
SO_2	0.0000	0.0000	0.0000	0.0000	0.0000	0.0000	0.0000	0.0021	0.0000	0.0021	0.0021
Total	1.0000	1.0000	1.0000	1.0000	1.0000	0.0000	0.0000	1.0000	0.0000	1.0000	1.0000
V-L Flowrate (kg_{mol}/hr)	73,780	73,780	22,664	22,664	1,929	0	0	104,057	0	104,057	104,057
V-L Flowrate (kg/hr)	2,129,062	2,129,062	654,026	654,026	55,662	0	0	3,094,985	0	3,094,985	3,094,985
Solids Flowrate (kg/hr)	0	0	0	0	0	283,750	5,503	22,012	22,012	0	0
Temperature (°C)	15	19	15	25	15	15	15	177	15	177	188
Pressure (MPa, abs)	0.10	0.11	0.10	0.11	0.10	0.10	0.10	0.10	0.10	0.10	0.11
Enthalpy (kJ/kg)[A]	30.23	34.36	30.23	40.78	30.23	---	---	335.07	---	316.66	328.98
Density (kg/m^3)	1.2	1.3	1.2	1.3	1.2	---	---	0.8	---	0.8	0.8
V-L Molecular Weight	28.857	28.857	28.857	28.857	28.857	---	---	29.743	---	29.743	29.743
V-L Flowrate (lb_{mol}/hr)	162,657	162,657	49,966	49,966	4,252	0	0	229,407	0	229,407	229,407
V-L Flowrate (lb/hr)	4,693,779	4,693,779	1,441,880	1,441,880	122,713	0	0	6,823,274	0	6,823,274	6,823,274
Solids Flowrate (lb/hr)	0	0	0	0	0	625,561	12,132	48,528	48,528	0	0
Temperature (°F)	59	66	59	78	59	59	59	350	59	350	371
Pressure (psia)	14.7	15.3	14.7	16.1	14.7	14.7	14.7	14.4	14.7	14.2	15.3
Enthalpy (Btu/lb)[A]	13.0	14.8	13.0	17.5	13.0	---	---	144.1	---	136.1	141.4
Density (lb/ft^3)	0.076	0.078	0.076	0.081	0.076	---	---	0.049	---	0.049	0.051

A - Reference conditions are 32.02 F & 0.089 PSIA

Exhibit 3-38 Case 1G Stream Table, Supercritical PC with 99% CO2 Capture (continued)

	12	13	14	15	16	17	18	19	20	21	22
V-L Mole Fraction											
Ar	0.0000	0.0000	0.0092	0.0000	0.0081	0.0000	0.0000	0.0000	0.0109	0.0000	0.0000
CO_2	0.0000	0.0000	0.0003	0.0004	0.1347	0.0000	0.0000	0.0000	0.0018	0.9885	1.0000
H_2	0.0000	0.0000	0.0000	0.0000	0.0000	0.0000	0.0000	0.0000	0.0000	0.0000	0.0000
H_2O	1.0000	1.0000	0.0099	0.9995	0.1550	1.0000	1.0000	1.0000	0.0381	0.0115	0.0000
N_2	0.0000	0.0000	0.7732	0.0000	0.6785	0.0000	0.0000	0.0000	0.9170	0.0000	0.0000
O_2	0.0000	0.0000	0.2074	0.0000	0.0238	0.0000	0.0000	0.0000	0.0321	0.0000	0.0000
SO_2	0.0000	0.0000	0.0000	0.0000	0.0000	0.0000	0.0000	0.0000	0.0000	0.0000	0.0000
Total	1.0000	1.0000	1.0000	1.0000	1.0000	1.0000	1.0000	1.0000	1.0000	1.0000	1.0000
V-L Flowrate (kg_{mol}/hr)	3,668	15,153	1,173	252	113,670	138,374	64,178	64,178	84,106	15,332	15,156
V-L Flowrate (kg/hr)	66,073	272,981	33,851	4,541	3,275,005	2,492,848	1,156,187	1,156,187	2,348,253	670,179	667,006
Solids Flowrate (kg/hr)	28,635	0	0	44,303	0	0	0	0	0	0	0
Temperature (°C)	15	15	18	58	58	593	291	151	32	21	35
Pressure (MPa, abs)	0.10	0.10	0.10	0.10	0.10	24.23	0.51	0.92	0.10	0.16	15.27
Enthalpy (kJ/kg)[A]	---	62.80	32.81	---	303.63	3,477.66	3,046.14	637.34	94.26	27.39	-212.35
Density (kg/m^3)	---	1,003.1	1.2	---	1.1	69.2	2.0	916.0	1.1	2.9	794.3
V-L Molecular Weight	---	18.015	28.857	---	28.811	18.015	18.015	18.015	27.920	43.711	44.010
V-L Flowrate (lb_{mol}/hr)	8,086	33,406	2,586	555	250,600	305,063	141,489	141,489	185,421	33,801	33,413
V-L Flowrate (lb/hr)	145,667	601,821	74,628	10,011	7,220,151	5,495,788	2,548,957	2,548,957	5,177,011	1,477,492	1,470,497
Solids Flowrate (lb/hr)	63,129	0	0	97,672	0	0	0	0	0	0	0
Temperature (°F)	59	59	64	136	136	1,100	556	304	89	69	95
Pressure (psia)	15.0	14.7	15.0	14.8	14.8	3,514.7	73.5	133.6	14.8	23.5	2,214.5
Enthalpy (Btu/lb)[A]	---	27.0	14.1	---	130.5	1,495.1	1,309.6	274.0	40.5	11.8	-91.3
Density (lb/ft^3)	---	62.622	0.077	---	0.067	4.319	0.123	57.184	0.070	0.183	49.586

A - Reference conditions are 32.02 F & 0.089 PSIA

Exhibit 3-39 Cases 1E through 1G Performance Modeling Results

POWER SUMMARY (Gross Power at Generator Terminals, kWe)	Case 1E (90%)	Case 1F (95%)	Case 1G (99%)
Steam Turbine Power	**661,300**	**667,900**	**679,600**
AUXILIARY LOAD SUMMARY, kWe[1]			
Coal Handling and Conveying	510	510	540
Limestone Handling & Reagent Preparation	1,260	1,290	1,380
Pulverizers	3,870	3,980	4,250
Ash Handling	740	760	810
Primary Air Fans	1,810	1,860	1,990
Forced Draft Fans	2,310	2,370	2,530
Induced Draft Fans	10,000	10,260	10,920
SCR	20	20	20
Baghouse	100	100	110
FGD Pumps and Agitators	4,130	4,240	4,540
Econamine FG Plus Auxiliaries	20,700	22,400	25,000
CO_2 Compression	44,390	48,080	53,610
Econamine Condensate Pump	160	170	230
Miscellaneous Balance of Plant [2]	2,000	2,000	2,000
Steam Turbine Auxiliaries	400	400	400
Condensate Pumps	580	550	470
Circulating Water Pumps	10,120	10,480	11,620
Cooling Tower Fans	5,910	6,150	6,820
Transformer Loss	2,280	2,320	2,390
TOTAL AUXILIARIES, kWe	**111,290**	**117,940**	**129,630**
NET POWER, kWe	**550,010**	**549,960**	**549,970**
Net Plant Efficiency, % (HHV)	28.2%	27.5%	25.7%
Net Plant Heat Rate, kJ/kWh (Btu/kWh)	12,748 (12,083)	13,083 (12,400)	14,000 (13,269)
CONDENSER COOLING DUTY GJ/hr (10^6 Btu/hr)	**1,735 (1,645)**	**1,665 (1,578)**	**1,400 (1,327)**
CONSUMABLES			
As-Received Coal Feed, kg/hr (lb/hr)[3]	258,399 (569,672)	265,160 (584,578)	283,750 (625,561)
Thermal Input, kWt	1,947,689	1,998,654	2,138,774
Raw Water Withdrawal, m^3/min (gpm)	38.2 (10,095)	39.8 (10,512)	44.2 (11,664)
Raw Water Consumption, m^3/min (gpm)	29.3 (7,753)	30.6 (8,074)	33.9 (8,961)

Notes:
1. Boiler feed pumps are turbine driven
2. Includes plant control systems, lighting, HVAC, and miscellaneous low voltage loads
3. HHV of As Received Illinois No. 6 coal is 27,135 kJ/kg (11,666 Btu/lb)

3.2.2.1 Environmental Performance for Cases 1E through 1G

Each case was designed to meet presumptive BACT standards utilizing the emissions control processes described in Section 2.4. A summary of plant air emissions for Case 1E (90 percent), 1F (95 percent), and 1G (99 percent) is presented in Exhibit 3-40.

SO_2 emissions are controlled using a wet limestone forced oxidation FGD that achieves a removal efficiency of 98 percent. To avoid the formation of heat stable salts in the Econamine process, an SO_2 polishing step is included to reduce the sulfur content to 10 ppm prior to the CO_2 absorber, and the balance of the SO_2 is absorbed by the MEA solution resulting in negligible stack emissions. The byproduct calcium sulfate is dewatered and stored on site. The wallboard grade material can potentially be marketed and sold, but since it is highly dependent on local market conditions, no byproduct credit was taken. The saturated flue gas exiting the FGD is vented through the plant stack.

Particulate emissions are controlled using a pulse jet fabric filter (baghouse) which operates at an efficiency of 99.8 percent. It was assumed that 20 percent of the ash exits the boiler as bottom ash and the remaining 80 percent exits the boiler in the flue gas [41].

Co-benefit capture of Hg in the fabric filter and FGD system was assumed to achieve a 90 percent capture rate [42]. The high chlorine content of the Illinois No. 6 coal and the SCR system will convert most of the Hg in the system to an oxidized state [43]. An inexpensive FGD system additive can be used to promote Hg capture if necessary, but was not included.

The carbon balance for the three cases is shown in Exhibit 3-41. The carbon input to the plant consists of carbon in the coal, limestone, and combustion and FGD forced oxidation air.

CO_2 capture efficiency is calculated as the pounds of CO_2 captured divided by the pounds of CO_2 produced. Most of the CO_2 produced comes from coal combustion, but a small amount is formed in the FGD system. The sum of these two sources is the amount produced.

(Carbon in Sequestration Product) / (Carbon in the Coal + Net Carbon from Limestone) or
332,243 / (363,136 + 5,242) *100 = 90% (Case 1E)
359,878 / (372,638 + 5,378) *100 = 95% (Case 1F)
401,323 / (398,762 + 5,756) *100 = 99% (Case 1G)

Exhibit 3-42 shows the sulfur balance for the three cases. Sulfur input comes solely from the sulfur in the coal. Sulfur output is the gypsum sulfur byproduct, and the sulfur emitted in the stack gas. The total sulfur capture is represented by the following fraction:

(Sulfur byproduct/Sulfur in the coal) or
(13,993/14,278)*100 = 98.0% (Case 1E)
(14,359/14,652)*100 = 98.0% (Case 1F)
(15,366/15,679)*100 = 98.0% (Case 1G)

The overall water balances for Case 1E, 1G, and 1F are shown in Exhibit 3-43, Exhibit 3-44, and Exhibit 3-45, respectively. Raw water is obtained from groundwater (50 percent) and from municipal sources (50 percent). Water demand represents the total amount of water required for a particular process. Some water is recovered within the process and that water is reused as

internal recycle. Raw water withdrawal is the difference between water demand and internal recycle. Process water discharged from the power plant is also accounted for in this study. Raw water consumption represents raw water withdrawal less process water discharge.

Heat and Mass Balance Diagrams

Heat and mass balance diagrams are shown for the following subsystems in Exhibit 3-46 through Exhibit 3-51.

- Boiler and flue gas cleanup
- Steam and feedwater

An overall plant energy balance is provided in tabular form for Case 1E, 1F, and 1G in Exhibit 3-52, Exhibit 3-53, and Exhibit 3-54, respectively. The power out is the steam turbine power after generator losses. In addition, energy balance Sankey diagrams are provided in Exhibit 3-55, Exhibit 3-56, and Exhibit 3-57 for Case 1E, 1F, and 1G, respectively.

Exhibit 3-40 Cases 1E through 1G Estimated Air Emission Rates

	kg/GJ (lb/10^6 Btu)			Tonne/year (ton/year) 85% capacity factor			kg/MWh (lb/MWh)		
	Case 1E	Case 1F	Case 1G	Case 1E	Case 1F	Case 1G	Case 1E	Case 1F	Case 1G
SO_2	0.007 (0.017)	0.007 (0.016)	0.007 (0.016)	372 (410)	378 (417)	402 (443)	0.076 (0.170)	0.076 (0.170)	0.079 (0.170)
NO_X	0.030 (0.070)	0.030 (0.070)	0.030 (0.070)	1,571 (1,732)	1,612 (1,777)	1,725 (1,902)	0.319 (0.703)	0.324 (0.715)	0.341 (0.752)
PM	0.006 (0.013)	0.006 (0.013)	0.006 (0.013)	292 (322)	299 (330)	320 (353)	0.059 (0.131)	0.060 (0.133)	0.063 (0.140)
Hg	0.49×10^{-6} (1.14×10^{-6})	0.49×10^{-6} (1.14×10^{-6})	0.49×10^{-6} (1.14×10^{-6})	0.026 (0.028)	0.026 (0.029)	0.028 (0.031)	5.21×10^{-6} (11.5×10^{-6})	5.29×10^{-6} (11.7×10^{-6})	5.57×10^{-6} (12.3×10^{-6})
CO_2	8.8 (20.4)	4.4 (10.2)	0.9 (2.0)	456,848 (503,588)	234,401 (258,383)	50,167 (55,299)	93 (205)	47 (104)	10 (22)
CO_2 net							112 (246)	57 (126)	12 (27)

Exhibit 3-41 Cases 1E through 1G Carbon Balance

Carbon In, kg/hr (lb/hr)			
	Case 1E	**Case 1F**	**Case 1G**
Coal	164,716 (363,136)	169,026 (372,638)	180,876 (398,762)
Air (CO_2)	352 (775)	361 (795)	386 (851)
Limestone	2,652 (5,848)	2,724 (6,005)	2,906 (6,406)
Total	**167,720 (369,759)**	**172,110 (379,438)**	**184,168 (406,019)**
Carbon Out, kg/hr (lb/hr)			
Stack Gas	16,745 (36,916)	8,591 (18,941)	1,839 (4,054)
CO_2 Product	150,703 (332,243)	163,238 (359,878)	182,037 (401,323)
Gypsum	275 (606)	284 (627)	295 (650)
Convergence Tolerance*	-3 (-6)	-3 (-7)	-3 (-7)
Total	**167,720 (369,759)**	**172,110 (379,438)**	**184,168 (406,019)**

Exhibit 3-42 Cases 1E through 1G Sulfur Balance

Sulfur In, kg/hr (lb/hr)			
	Case 1E	**Case 1F**	**Case 1G**
Coal	6,477 (14,278)	6,646 (14,652)	7,112 (15,679)
Total	**6,477 (14,278)**	**6,646 (14,652)**	**7,112 (15,679)**
Sulfur Out, kg/hr (lb/hr)			
Gypsum	6,347 (13,993)	6,513 (14,359)	6,970 (15,366)
Stack Gas	25 (55)	25 (56)	27 (60)
AGR	104 (230)	107 (237)	115 (254)
Convergence Tolerance*	1 (0)	1 (0)	0 (-1)
Total	**6,477 (14,278)**	**6,646 (14,652)**	**7,112 (15,679)**

Exhibit 3-43 Case 1E (90%) Water Balance

Water Use	Water Demand, m^3/min (gpm)	Internal Recycle, m^3/min (gpm)	Raw Water Withdrawal, m^3/min (gpm)	Process Water Discharge, m^3/min (gpm)	Raw Water Consumption, m^3/min (gpm)
Econamine	0.14 (36)	0.0 (0)	0.14 (36)	0.0 (0)	0.14 (36)
FGD Makeup	5.16 (1,363)	0.0 (0)	5.16 (1,363)	0.0 (0)	5.16 (1,363)
BFW Makeup	0.38 (100)	0.0 (0)	0.38 (100)	0.0 (0)	0.38 (100)
Cooling Tower Makeup	39.4 (10,415)	6.88 (1,818)	32.5 (8,597)	8.87 (2,342)	23.7 (6,254)
Total	**45.1 (11,914)**	**6.88 (1,818)**	**38.2 (10,095)**	**8.87 (2,342)**	**29.3 (7,753)**
Total, gal/MWh$_{net}$	**1,300**	**198**	**1,101**	**256**	**846**

Exhibit 3-44 Case 1F (95%) Water Balance

Water Use	Water Demand, m^3/min (gpm)	Internal Recycle, m^3/min (gpm)	Raw Water Withdrawal, m^3/min (gpm)	Process Water Discharge, m^3/min (gpm)	Raw Water Consumption, m^3/min (gpm)
Econamine	0.15 (39)	0.0 (0)	0.15 (39)	0.0 (0)	0.15 (39)
FGD Makeup	5.29 (1,399)	0.0 (0)	5.29 (1,399)	0.0 (0)	5.29 (1,399)
BFW Makeup	0.39 (103)	0.0 (0)	0.39 (103)	0.0 (0)	0.39 (103)
Cooling Tower Makeup	41.0 (10,840)	7.07 (1,869)	34.0 (8,971)	9.23 (2,438)	24.7 (6,534)
Total	**46.9 (12,380)**	**7.07 (1,869)**	**39.8 (10,512)**	**9.23 (2,438)**	**30.6 (8,074)**
Total, gal/MWh$_{net}$	**1,351**	**204**	**1,147**	**266**	**881**

Exhibit 3-45 Case 1G (99%) Water Balance

Water Use	Water Demand, m^3/min (gpm)	Internal Recycle, m^3/min (gpm)	Raw Water Withdrawal, m^3/min (gpm)	Process Water Discharge, m^3/min (gpm)	Raw Water Consumption, m^3/min (gpm)
Econamine	0.16 (44)	0.0 (0)	0.16 (44)	0.0 (0)	0.16 (44)
FGD Makeup	5.66 (1,495)	0.0 (0)	5.66 (1,495)	0.0 (0)	5.66 (1,495)
BFW Makeup	0.42 (110)	0.0 (0)	0.42 (110)	0.0 (0)	0.42 (110)
Cooling Tower Makeup	45.5 (12,017)	7.58 (2,002)	37.9 (10,016)	10.2 (2,703)	27.7 (7,313)
Total	**51.7 (13,666)**	**7.58 (2,002)**	**44.2 (11,664)**	**10.2 (2,703)**	**33.9 (8,961)**
Total, gal/MWh_{net}	**1,491**	**218**	**1,273**	**295**	**978**

This page intentionally left blank.

Exhibit 3-46 Case 1E (90%) Heat and Mass Balance, Supercritical PC Boiler and Gas Cleanup Systems

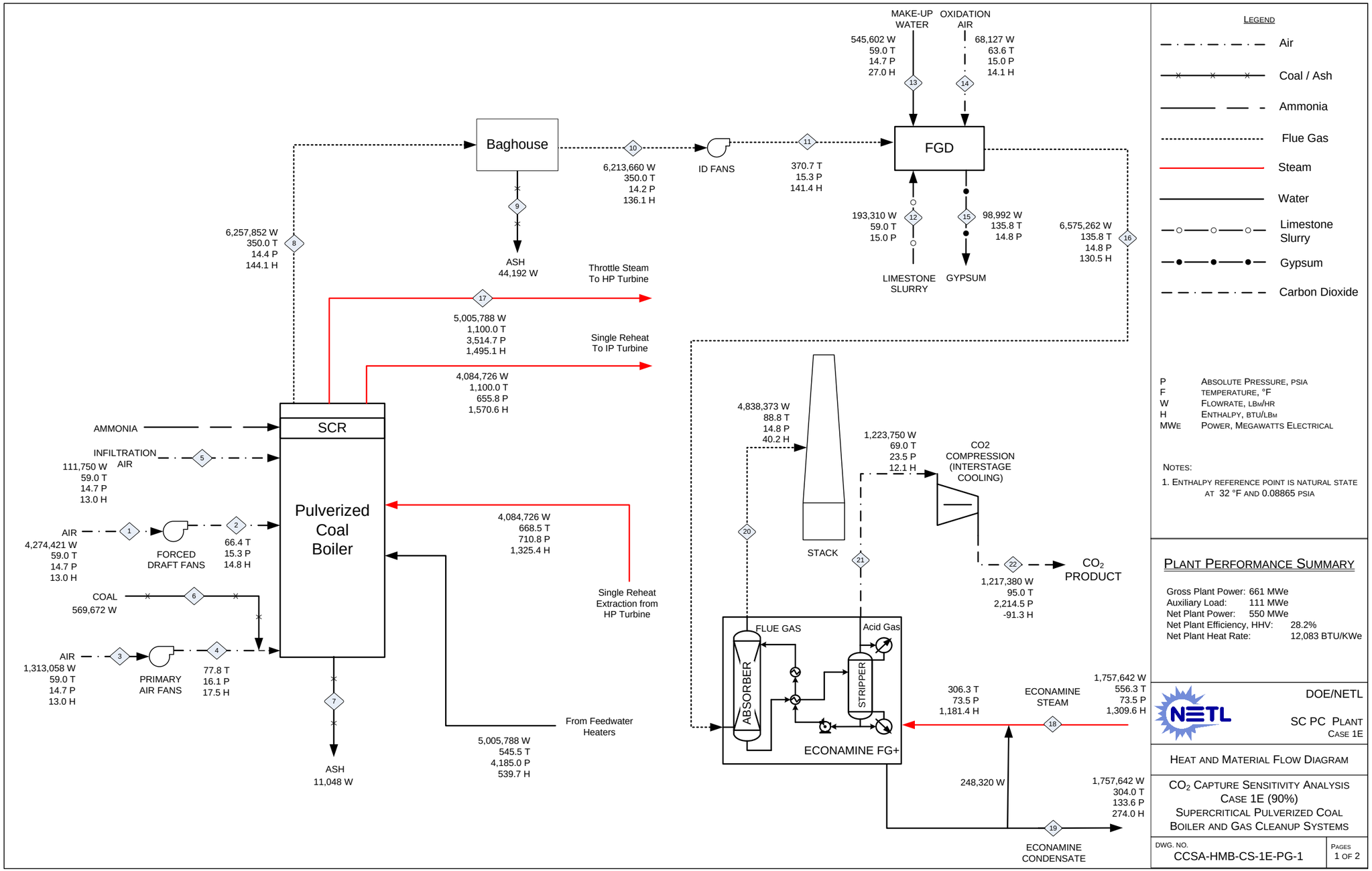

Exhibit 3-47 Case 1E (90%) Heat and Mass Balance, Power Block Systems

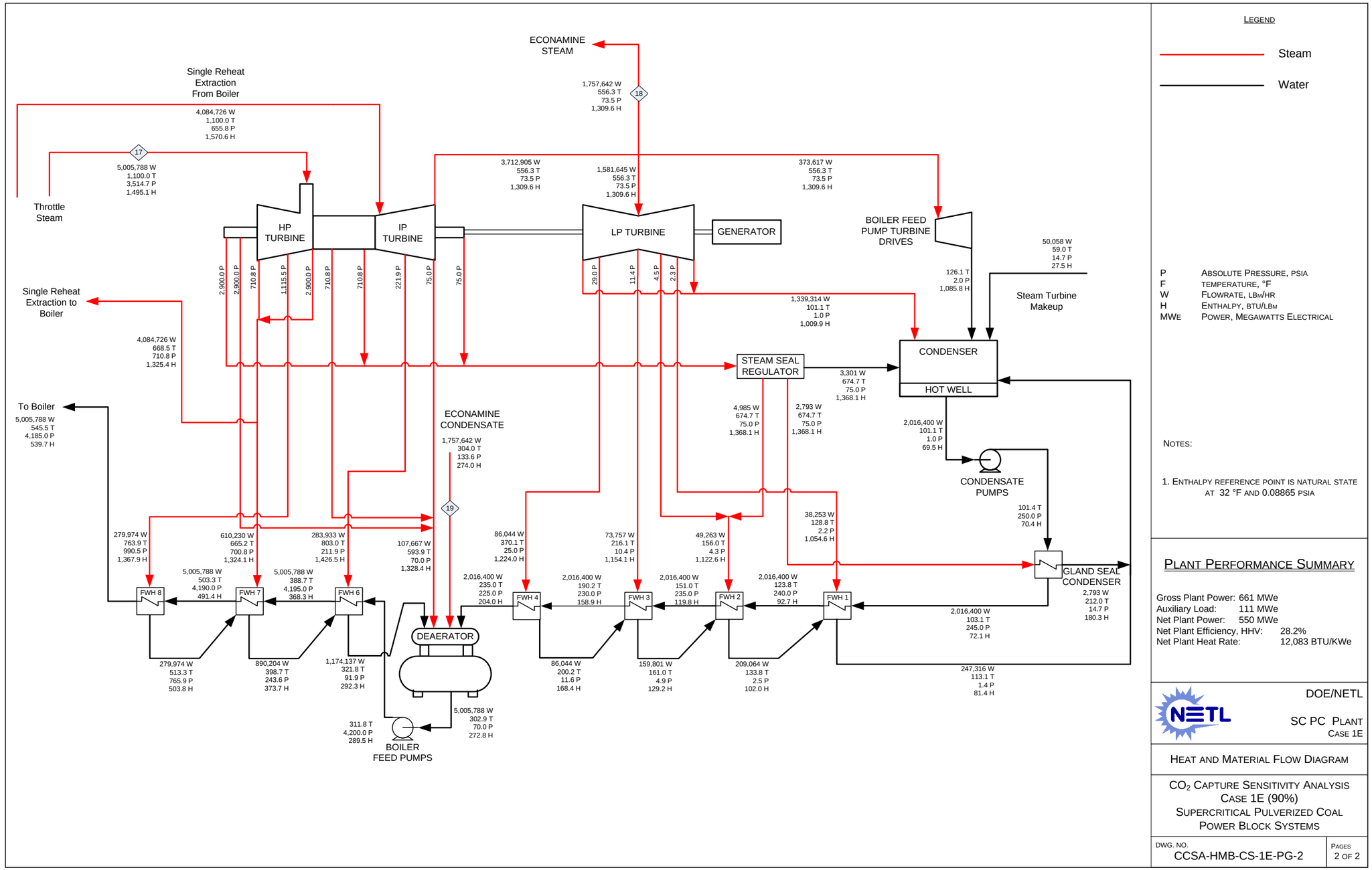

Exhibit 3-48 Case 1F (95%) Heat and Mass Balance, Supercritical PC Boiler and Gas Cleanup Systems

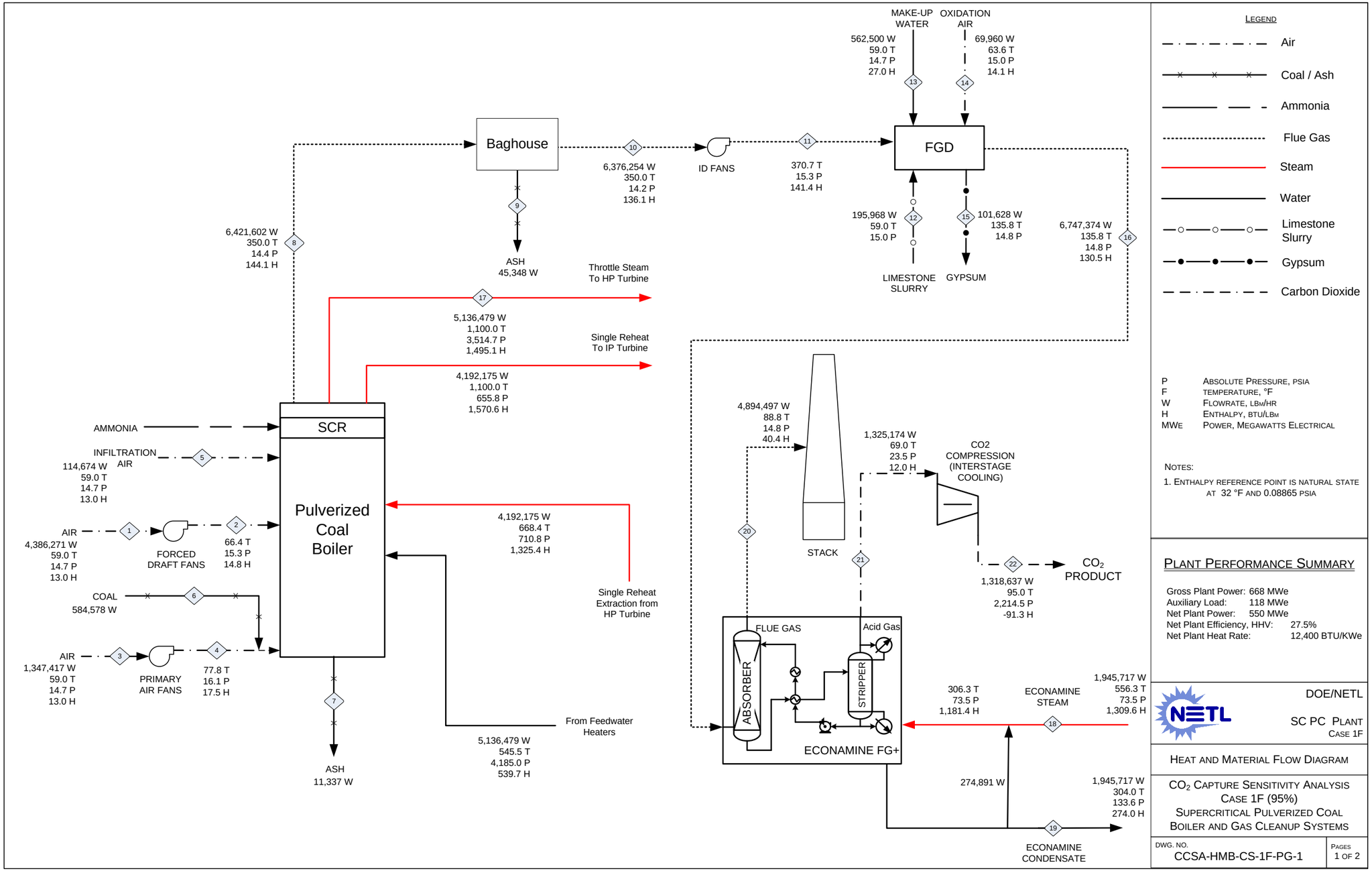

Exhibit 3-49 Case 1F (95%) Heat and Mass Balance, Power Block Systems

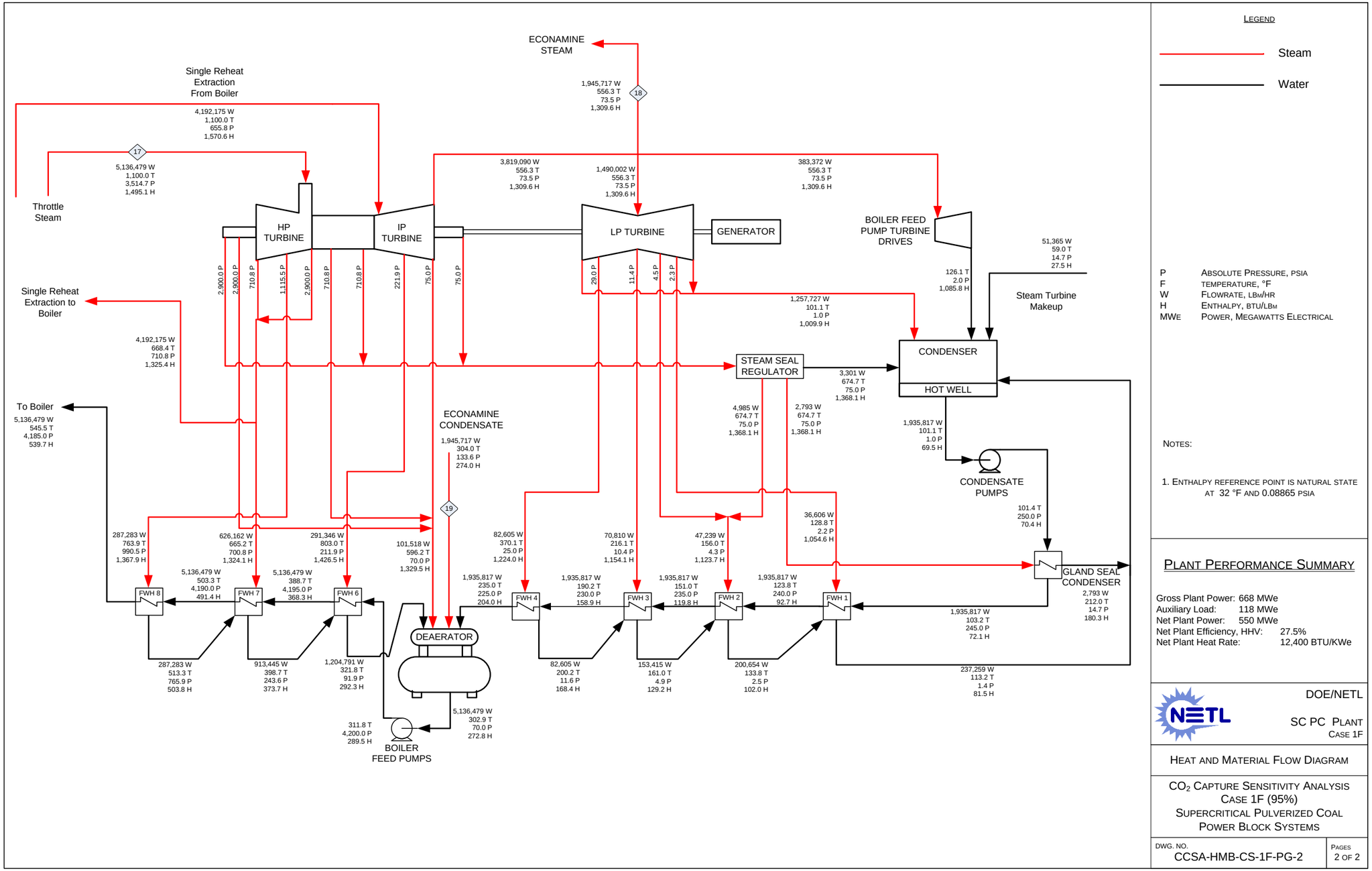

Exhibit 3-50 Case 1G (99%) Heat and Mass Balance, Supercritical PC Boiler and Gas Cleanup Systems

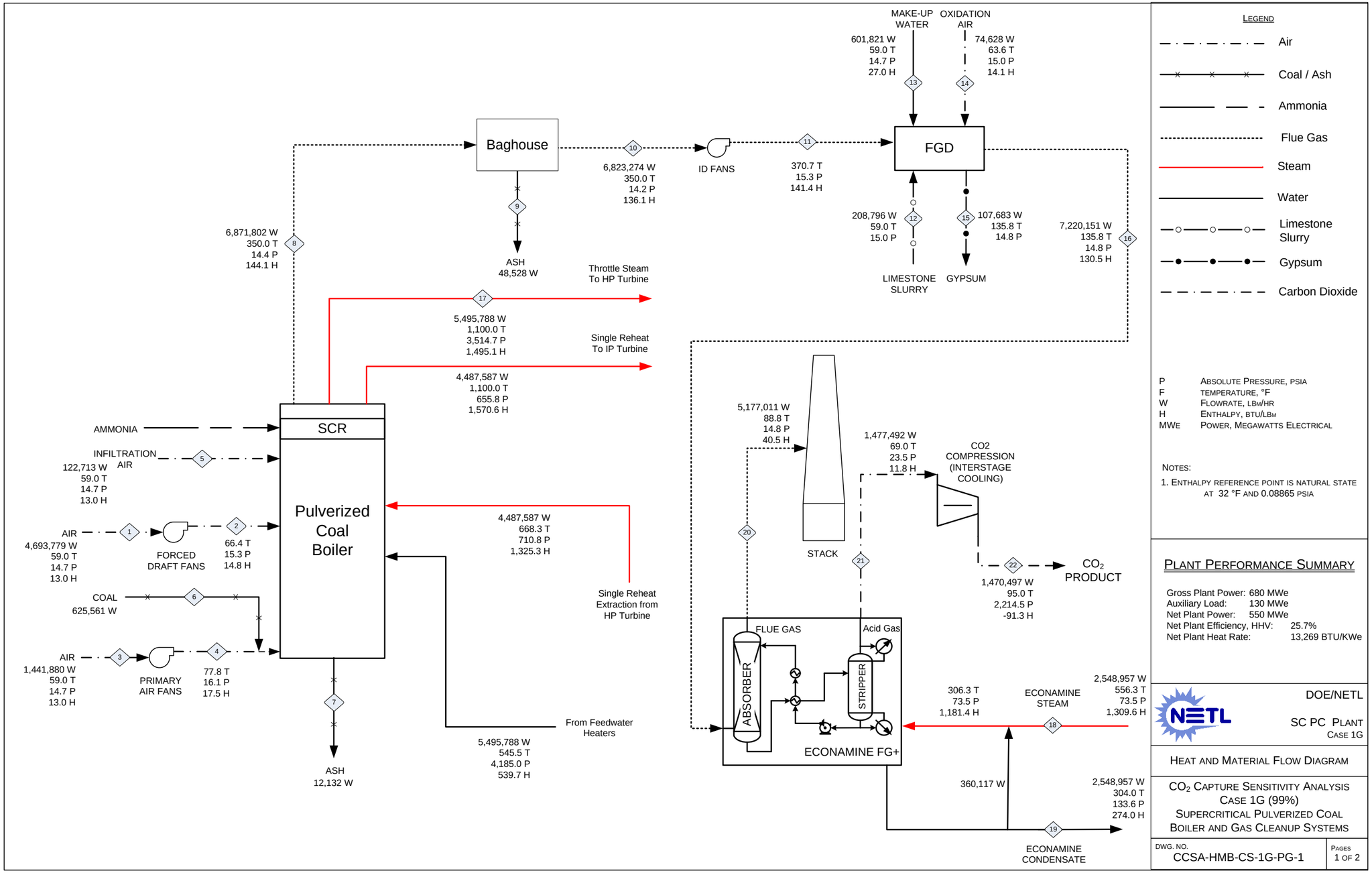

Exhibit 3-51 Case 1G (99%) Heat and Mass Balance, Power Block Systems

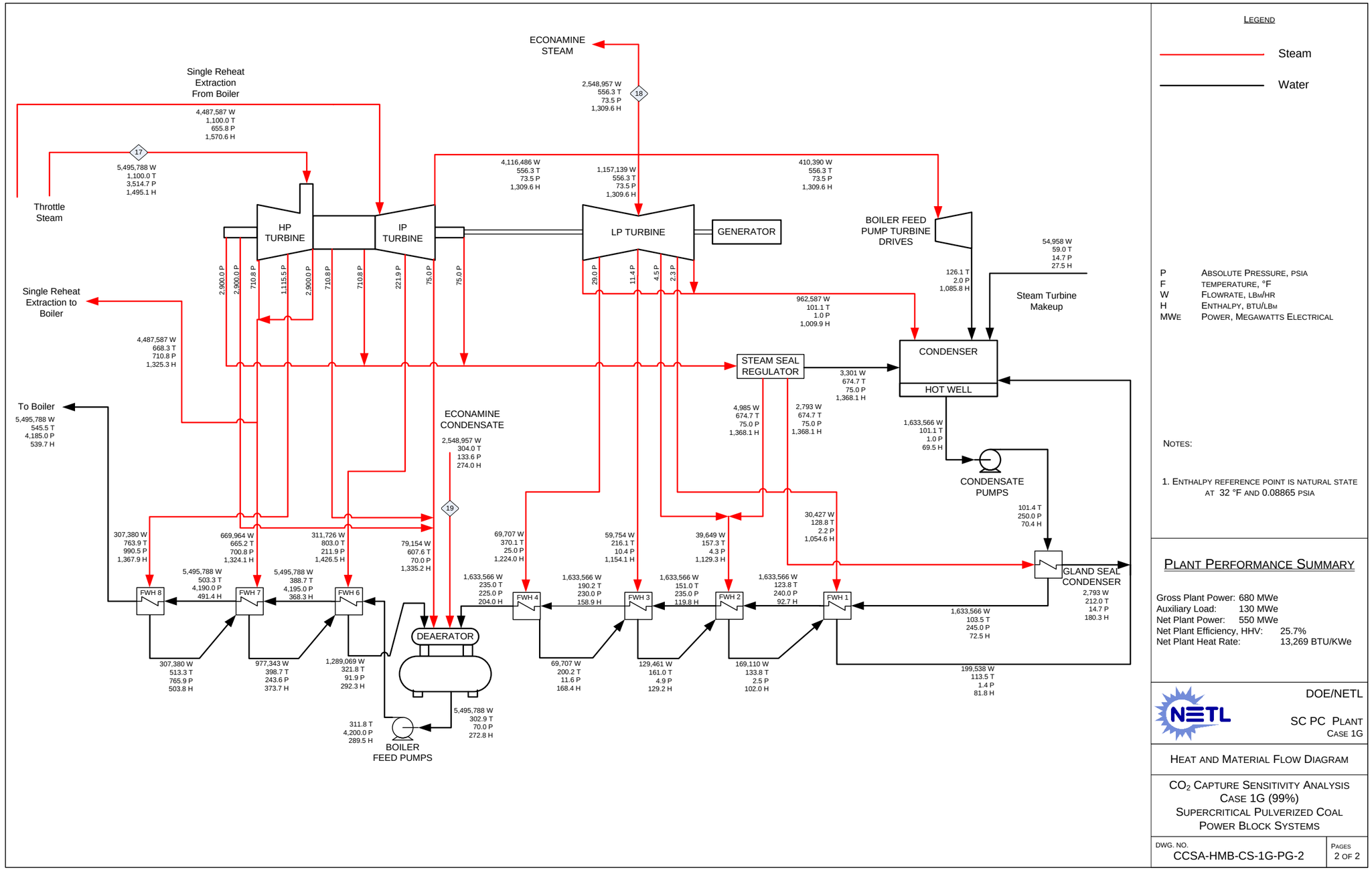

Exhibit 3-52 Case 1E (90%) Energy Balance

	HHV	Sensible + Latent	Power	Total
Heat In GJ/hr (MMBtu/hr)				
Coal	7,012 (6,646)	*5.9 (5.6)*		7,018 (6,651)
Combustion Air		78.1 (74.1)		78.1 (74.1)
Raw Water Makeup		158.4 (150.1)		158.4 (150.1)
Limestone		0.57 (0.54)		0.57 (0.54)
Totals	**7,012 (6,646)**	**243.0 (230.3)**	**0.0 (0.0)**	**7,255 (6,876)**
Heat Out GJ/hr (MMBtu/hr)				
Bottom Ash		0.6 (0.6)		0.6 (0.6)
Fly Ash + Gypsum		2.6 (2.4)		2.6 (2.4)
Flue Gas		205 (195)		205 (195)
CO_2		*-117 (-111)*		*-117 (-111)*
Cooling Tower*		*3,187.8 (3,021.4)*		*3,187.8 (3,021.4)*
Process Losses**		*1,995.6 (1,891.5)*		*1,995.6 (1,891.5)*
Net Power			1,980 (1,877)	1,980 (1,877)
Totals	**0.0 (0.0)**	**5,275 (4,999)**	**1,980 (1,877)**	**7,255 (6,876)**

Note: Italicized numbers are estimated
Reference conditions are 0 °C (32.02 °F) & 0.6 kPa (0.089 psia)
* Cooling Tower includes losses from the Condenser, Cooling Tower Blowdown, and Econamine cooling water.
** Process losses are estimated to match the heat input to the plant.
Process losses include losses from: steam turbine, combustion reactions, gas cooling, and Econamine steam.

Exhibit 3-53 Case 1F (95%) Energy Balance

	HHV	Sensible + Latent	Power	Total
Heat In GJ/hr (MMBtu/hr)				
Coal	7,195 (6,820)	*6.0 (5.7)*		7,201 (6,825)
Combustion Air		80.2 (76.0)		80.2 (76.0)
Raw Water Makeup		164.7 (156.1)		164.7 (156.1)
Limestone		0.58 (0.55)		0.58 (0.55)
Totals	**7,195 (6,820)**	**251.5 (238.4)**	**0.0 (0.0)**	**7,447 (7,058)**
Heat Out GJ/hr (MMBtu/hr)				
Bottom Ash		0.7 (0.6)		0.7 (0.6)
Fly Ash + Gypsum		2.6 (2.5)		2.6 (2.5)
Flue Gas		209 (198)		209 (198)
CO_2		*-127 (-120)*		*-127 (-120)*
Cooling Tower*		*3,195.0 (3,028.3)*		*3,195.0 (3,028.3)*
Process Losses**		*2,187.0 (2,072.8)*		*2,187.0 (2,072.8)*
Net Power			1,980 (1,877)	1,980 (1,877)
Totals	**0.0 (0.0)**	**5,467 (5,182)**	**1,980 (1,877)**	**7,447 (7,058)**

Note: Italicized numbers are estimated
Reference conditions are 0 °C (32.02 °F) & 0.6 kPa (0.089 psia)
* Cooling Tower includes losses from the Condenser, Cooling Tower Blowdown, and Econamine cooling water.
** Process losses are estimated to match the heat input to the plant.
Process losses include losses from: steam turbine, combustion reactions, gas cooling, and Econamine steam.

Exhibit 3-54 Case 1G (99%) Energy Balance

	HHV	Sensible + Latent	Power	Total
Heat In GJ/hr (MMBtu/hr)				
Coal	7,700 (7,298)	*6.4 (6.1)*		7,706 (7,304)
Combustion Air		85.8 (81.3)		85.8 (81.3)
Raw Water Makeup		182.2 (172.7)		182.2 (172.7)
Limestone		0.62 (0.59)		0.62 (0.59)
Totals	**7,700 (7,298)**	**275.1 (260.7)**	**0.0 (0.0)**	**7,975 (7,559)**
Heat Out GJ/hr (MMBtu/hr)				
Bottom Ash		0.7 (0.7)		0.7 (0.7)
Fly Ash + Gypsum		2.8 (2.7)		2.8 (2.7)
Flue Gas		221 (210)		221 (210)
CO_2		*-142 (-134)*		*-142 (-134)*
Cooling Tower*		*3,125.1 (2,962.1)*		*3,125.1 (2,962.1)*
Process Losses**		*2,786.4 (2,641.0)*		*2,786.4 (2,641.0)*
Net Power			1,980 (1,877)	1,980 (1,877)
Totals	**0.0 (0.0)**	**5,995 (5,682)**	**1,980 (1,877)**	**7,975 (7,559)**

Note: Italicized numbers are estimated
Reference conditions are 0 °C (32.02 °F) & 0.6 kPa (0.089 psia)
* Cooling Tower includes losses from the Condenser, Cooling Tower Blowdown, and Econamine cooling water.
** Process losses are estimated to match the heat input to the plant.
Process losses include losses from: steam turbine, combustion reactions, gas cooling, and Econamine steam.

Exhibit 3-55 Case 1E Energy Balance Sankey Diagram

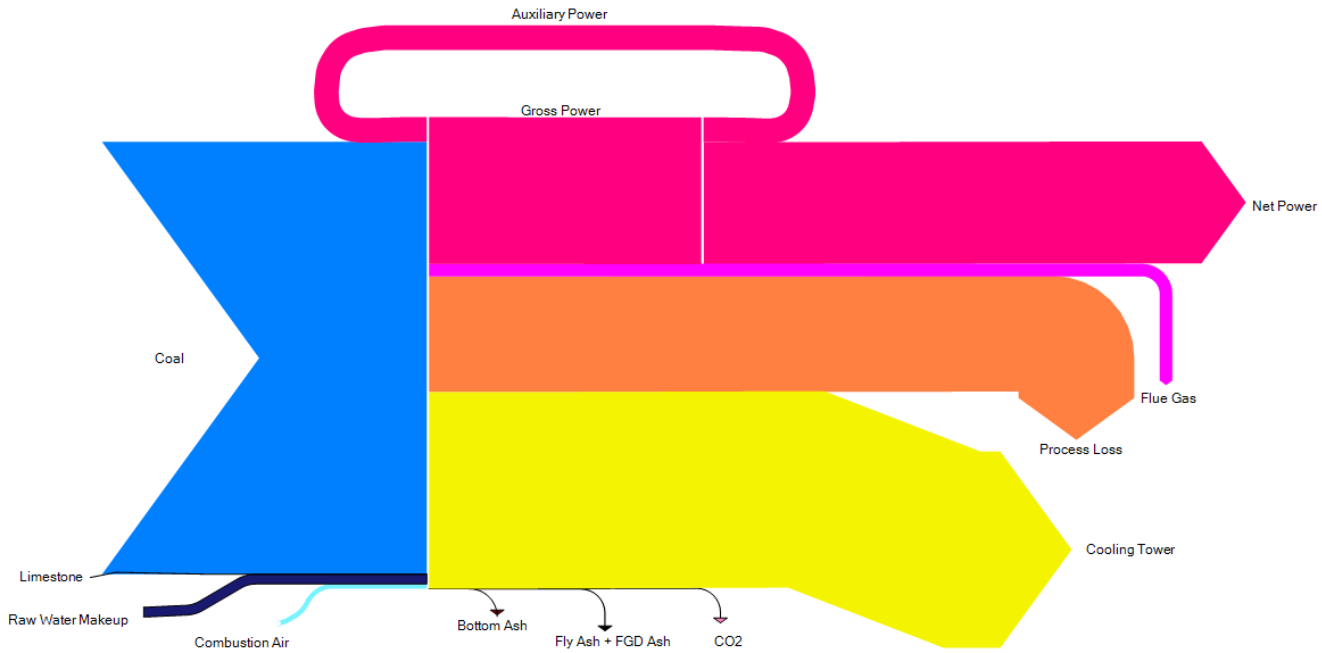

Exhibit 3-56 Case 1F Energy Balance Sankey Diagram

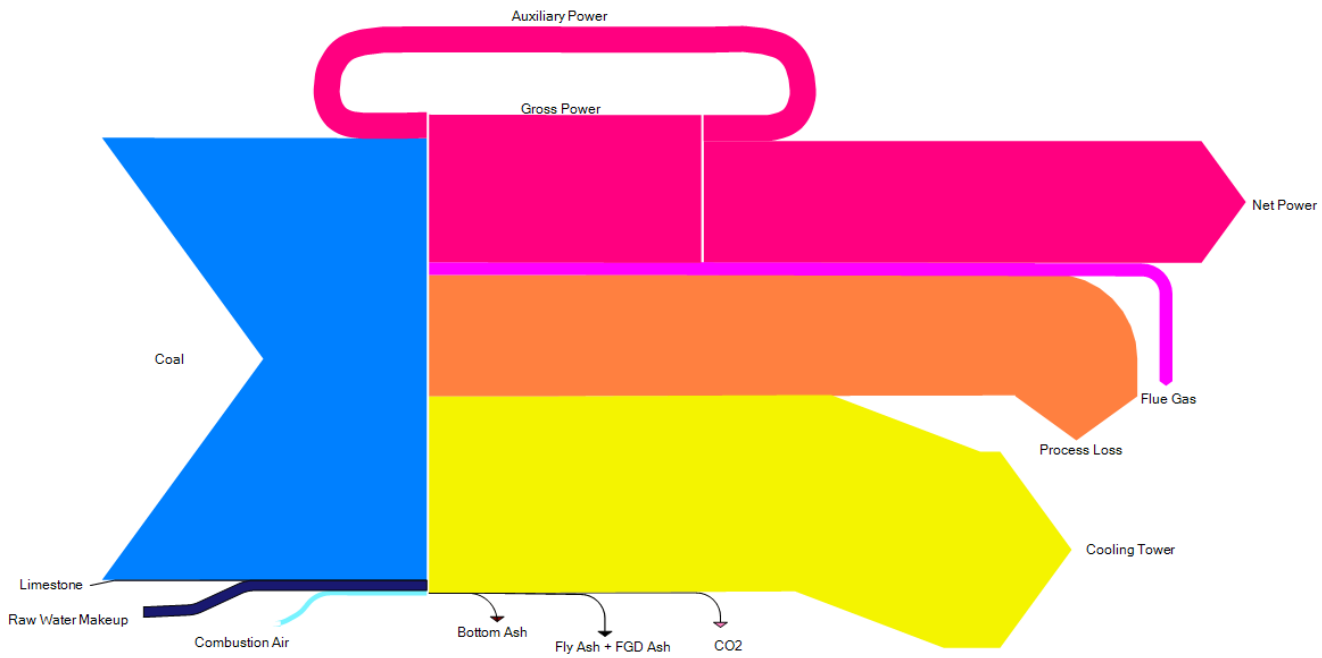

Exhibit 3-57 Case 1G Energy Balance Sankey Diagram

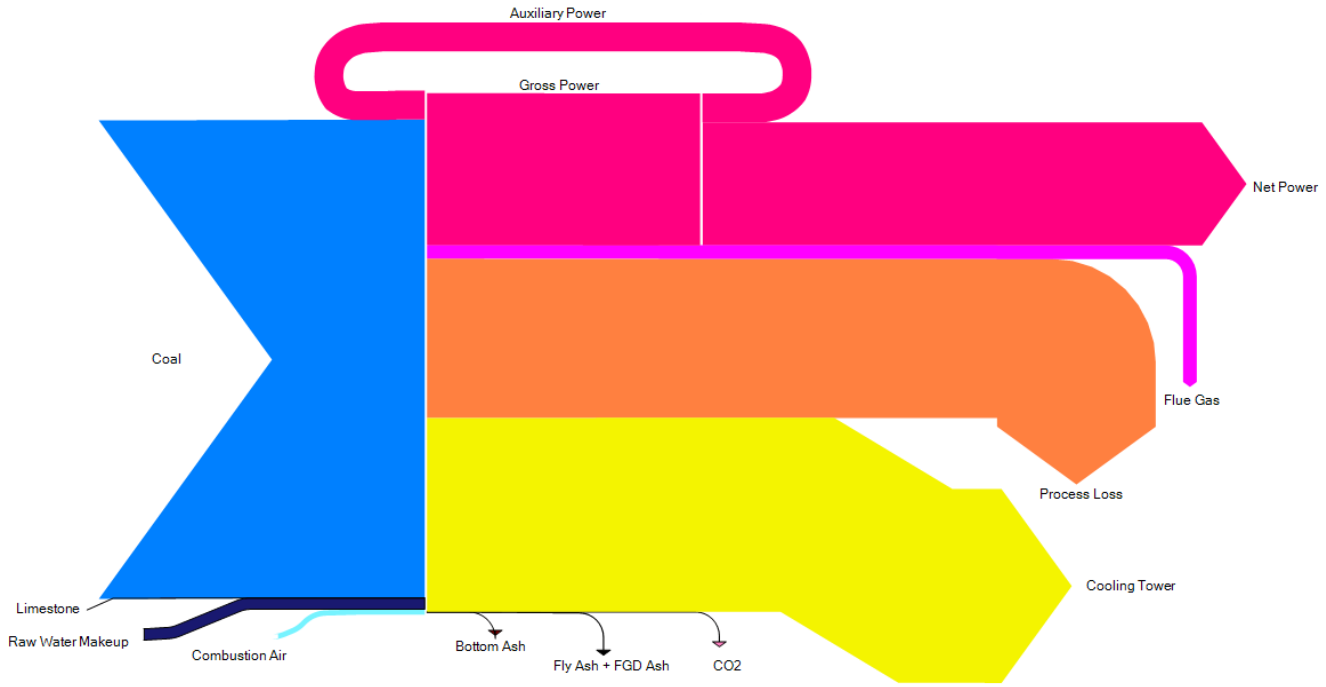

This page intentionally left blank

3.2.2.2 Major Equipment List for Cases 1E through 1G

Major equipment items for the CO_2 capture without bypass cases are shown in the following tables. The accounts used in the equipment list correspond to the account numbers used in the cost estimates in Section 3.2.4. In general, the design conditions include a 10 percent contingency for flows and heat duties and a 21 percent contingency for heads on pumps and fans.

ACCOUNT 1 FUEL AND SORBENT HANDLING

Equipment No.	Description	Type	Design Condition			Opr Qty. (Spares)
			Case 1E	Case 1F	Case 1G	
1	Bottom Trestle Dumper with Receiving Hoppers	N/A	181 tonne (200 ton)	181 tonne (200 ton)	181 tonne (200 ton)	2 (0)
2	Feeder	Belt	572 tonne/hr (630 tph)	572 tonne/hr (630 tph)	572 tonne/hr (630 tph)	2 (0)
3	Conveyor No. 1	Belt	1,134 tonne/hr (1,250 tph)	1,134 tonne/hr (1,250 tph)	1,134 tonne/hr (1,250 tph)	1 (0)
4	Transfer Tower No. 1	Enclosed	N/A	N/A	N/A	1 (0)
5	Conveyor No. 2	Belt	1,134 tonne/hr (1,250 tph)	1,134 tonne/hr (1,250 tph)	1,134 tonne/hr (1,250 tph)	1 (0)
6	As-Received Coal Sampling System	Two-stage	N/A	N/A	N/A	1 (0)
7	Stacker/Reclaim	Traveling Linear	1,134 tonne/hr (1,250 tph)	1,134 tonne/hr (1,250 tph)	1,134 tonne/hr (1,250 tph)	1 (0)
8	Reclaim Hopper	N/A	54 tonne (60 ton)	54 tonne (60 ton)	64 tonne (70 ton)	2 (1)
9	Feeder	Vibratory	209 tonne/hr (230 tph)	218 tonne/hr (240 tph)	236 tonne/hr (260 tph)	2 (1)
10	Conveyor No. 3	Belt w/tripper	426 tonne/hr (470 tph)	435 tonne/hr (480 tph)	472 tonne/hr (520 tph)	1 (0)
11	Crusher Tower	N/A	N/A	N/A	N/A	1 (0)
12	Coal Surge Bin w/ Vent Filter	Dual Outlet	209 tonne (230 ton)	218 tonne (240 ton)	236 tonne (260 ton)	2 (0)
13	Crusher	Impactor reduction	8 cm x 0 - 3 cm x 0 (3 in x 0 - 1-1/4 in x 0)	8 cm x 0 - 3 cm x 0 (3 in x 0 - 1-1/4 in x 0)	8 cm x 0 - 3 cm x 0 (3 in x 0 - 1-1/4 in x 0)	2 (0)
14	As-Fired Coal Sampling System	Swing Hammer	N/A	N/A	N/A	1 (1)
15	Conveyor No. 4	Belt w/tripper	426 tonne/hr (470 tph)	435 tonne/hr (480 tph)	472 tonne/hr (520 tph)	1 (0)
16	Transfer Tower No. 2	Enclosed	N/A	N/A	N/A	1 (0)
17	Conveyor No. 5	Belt w/tripper	426 tonne/hr (470 tph)	435 tonne/hr (480 tph)	472 tonne/hr (520 tph)	1 (0)
18	Coal Silo w/ Vent Filter and Slide Gates	Field Erected	907 tonne (1,000 ton)	998 tonne (1,100 ton)	998 tonne (1,100 ton)	3 (0)
19	Limestone Truck Unloading Hopper	N/A	36 tonne (40 ton)	36 tonne (40 ton)	36 tonne (40 ton)	1 (0)
20	Limestone Feeder	Belt	109 tonne/hr (120 tph)	109 tonne/hr (120 tph)	118 tonne/hr (130 tph)	1 (0)
21	Limestone Conveyor No. L1	Belt	109 tonne/hr (120 tph)	109 tonne/hr (120 tph)	118 tonne/hr (130 tph)	1 (0)
22	Limestone Reclaim Hopper	N/A	18 tonne (20 ton)	18 tonne (20 ton)	27 tonne (30 ton)	1 (0)
23	Limestone Reclaim Feeder	Belt	91 tonne/hr (100 tph)	91 tonne/hr (100 tph)	91 tonne/hr (100 tph)	1 (0)
24	Limestone Conveyor No. L2	Belt	91 tonne/hr (100 tph)	91 tonne/hr (100 tph)	91 tonne/hr (100 tph)	1 (0)
25	Limestone Day Bin	w/ actuator	345 tonne (380 ton)	354 tonne (390 ton)	381 tonne (420 ton)	2 (0)

ACCOUNT 2 COAL AND SORBENT PREPARATION AND FEED

Equipment No.	Description	Type	Design Condition			Opr Qty. (Spares)
			Case 1E	Case 1F	Case 1G	
1	Coal Feeder	Gravimetric	45 tonne/hr (50 tph)	45 tonne/hr (50 tph)	54 tonne/hr (60 tph)	6 (0)
2	Coal Pulverizer	Ball type or eq.	45 tonne/hr (50 tph)	45 tonne/hr (50 tph)	54 tonne/hr (60 tph)	6 (0)
3	Limestone Weigh Feeder	Gravimetric	29 tonne/hr (32 tph)	30 tonne/hr (33 tph)	32 tonne/hr (35 tph)	1 (1)
4	Limestone Ball Mill	Rotary	29 tonne/hr (32 tph)	30 tonne/hr (33 tph)	32 tonne/hr (35 tph)	1 (1)
5	Limestone Mill Slurry Tank with Agitator	N/A	109,777 liters (29,000 gal)	113,562 liters (30,000 gal)	121,133 liters (32,000 gal)	1 (1)
6	Limestone Mill Recycle Pumps	Horizontal centrifugal	1,855 lpm @ 12m H_2O (490 gpm @ 40 ft H_2O)	1,893 lpm @ 12m H_2O (500 gpm @ 40 ft H_2O)	2,006 lpm @ 12m H_2O (530 gpm @ 40 ft H_2O)	1 (1)
7	Hydroclone Classifier	4 active cyclones in a 5 cyclone bank	454 lpm (120 gpm) per cyclone	492 lpm (130 gpm) per cyclone	492 lpm (130 gpm) per cyclone	1 (1)
8	Distribution Box	2-way	N/A	N/A	N/A	1 (1)
9	Limestone Slurry Storage Tank with Agitator	Field erected	620,808 liters (164,000 gal)	639,735 liters (169,000 gal)	681,374 liters (180,000 gal)	1 (1)
10	Limestone Slurry Feed Pumps	Horizontal centrifugal	1,287 lpm @ 9m H_2O (340 gpm @ 30 ft H_2O)	1,325 lpm @ 9m H_2O (350 gpm @ 30 ft H_2O)	1,401 lpm @ 9m H_2O (370 gpm @ 30 ft H_2O)	1 (1)

ACCOUNT 3 FEEDWATER AND MISCELLANEOUS SYSTEMS AND EQUIPMENT

Equipment No.	Description	Type	Design Condition			Opr Qty. (Spares)
			Case 1E	Case 1F	Case 1G	
1	Demineralized Water Storage Tank	Vertical, cylindrical, outdoor	1,499,023 liters (396,000 gal)	1,540,663 liters (407,000 gal)	1,646,654 liters (435,000 gal)	2 (0)
2	Condensate Pumps	Vertical canned	17,034 lpm @ 213 m H_2O (4,500 gpm @ 700 ft H_2O)	16,277 lpm @ 213 m H_2O (4,300 gpm @ 700 ft H_2O)	13,627 lpm @ 213 m H_2O (3,600 gpm @ 700 ft H_2O)	1 (1)
3	Deaerator and Storage Tank	Horizontal spray type	2,497,480 kg/hr (5,506,000 lb/hr), 5 min. tank	2,562,797 kg/hr (5,650,000 lb/hr), 5 min. tank	2,741,966 kg/hr (6,045,000 lb/hr), 5 min. tank	1 (0)
4	Boiler Feed Pump/Turbine	Barrel type, multi-stage, centrifugal	42,018 lpm @ 3,505 m H_2O (11,100 gpm @ 11,500 ft H_2O)	43,154 lpm @ 3,505 m H_2O (11,400 gpm @ 11,500 ft H_2O)	46,182 lpm @ 3,505 m H_2O (12,200 gpm @ 11,500 ft H_2O)	1 (1)
5	Startup Boiler Feed Pump, Electric Motor Driven	Barrel type, multi-stage, centrifugal	12,492 lpm @ 3,505 m H_2O (3,300 gpm @ 11,500 ft H_2O)	12,870 lpm @ 3,505 m H_2O (3,400 gpm @ 11,500 ft H_2O)	13,627 lpm @ 3,505 m H_2O (3,600 gpm @ 11,500 ft H_2O)	1 (0)
6	LP Feedwater Heater 1A/1B	Horizontal U-tube	503,488 kg/hr (1,110,000 lb/hr)	480,808 kg/hr (1,060,000 lb/hr)	408,233 kg/hr (900,000 lb/hr)	2 (0)
7	LP Feedwater Heater 2A/2B	Horizontal U-tube	503,488 kg/hr (1,110,000 lb/hr)	480,808 kg/hr (1,060,000 lb/hr)	408,233 kg/hr (900,000 lb/hr)	2 (0)
8	LP Feedwater Heater 3A/3B	Horizontal U-tube	503,488 kg/hr (1,110,000 lb/hr)	480,808 kg/hr (1,060,000 lb/hr)	408,233 kg/hr (900,000 lb/hr)	2 (0)
9	LP Feedwater Heater 4A/4B	Horizontal U-tube	503,488 kg/hr (1,110,000 lb/hr)	480,808 kg/hr (1,060,000 lb/hr)	408,233 kg/hr (900,000 lb/hr)	2 (0)
10	HP Feedwater Heater 6	Horizontal U-tube	2,499,294 kg/hr (5,510,000 lb/hr)	2,562,797 kg/hr (5,650,000 lb/hr)	2,744,234 kg/hr (6,050,000 lb/hr)	1 (0)
11	HP Feedwater Heater 7	Horizontal U-tube	2,499,294 kg/hr (5,510,000 lb/hr)	2,562,797 kg/hr (5,650,000 lb/hr)	2,744,234 kg/hr (6,050,000 lb/hr)	1 (0)
12	HP Feedwater heater 8	Horizontal U-tube	2,499,294 kg/hr (5,510,000 lb/hr)	2,562,797 kg/hr (5,650,000 lb/hr)	2,744,234 kg/hr (6,050,000 lb/hr)	1 (0)
13	Auxiliary Boiler	Shop fabricated, water tube	18,144 kg/hr, 2.8 MPa, 343°C (40,000 lb/hr, 400 psig, 650°F)	18,144 kg/hr, 2.8 MPa, 343°C (40,000 lb/hr, 400 psig, 650°F)	18,144 kg/hr, 2.8 MPa, 343°C (40,000 lb/hr, 400 psig, 650°F)	1 (0)

Equipment No.	Description	Type	Design Condition			Opr Qty. (Spares)
			Case 1E	Case 1F	Case 1G	
14	Fuel Oil System	No. 2 fuel oil for light off	1,135,624 liter (300,000 gal)	1,135,624 liter (300,000 gal)	1,135,624 liter (300,000 gal)	1 (0)
15	Service Air Compressors	Flooded Screw	28 m^3/min @ 0.7 MPa (1,000 scfm @ 100 psig)	28 m^3/min @ 0.7 MPa (1,000 scfm @ 100 psig)	28 m^3/min @ 0.7 MPa (1,000 scfm @ 100 psig)	2 (1)
16	Instrument Air Dryers	Duplex, regenerative	28 m^3/min (1,000 scfm)	28 m^3/min (1,000 scfm)	28 m^3/min (1,000 scfm)	2 (1)
17	Closed Cylce Cooling Heat Exchangers	Shell and tube	53 GJ/hr (50 MMBtu/hr) each	53 GJ/hr (50 MMBtu/hr) each	53 GJ/hr (50 MMBtu/hr) each	2 (0)
18	Closed Cycle Cooling Water Pumps	Horizontal centrifugal	20,820 lpm @ 30 m H_2O (5,500 gpm @ 100 ft H_2O)	20,820 lpm @ 30 m H_2O (5,500 gpm @ 100 ft H_2O)	20,820 lpm @ 30 m H_2O (5,500 gpm @ 100 ft H_2O)	2 (1)
19	Engine-Driven Fire Pump	Vertical turbine, diesel engine	3,785 lpm @ 88 m H_2O (1,000 gpm @ 290 ft H_2O)	3,785 lpm @ 88 m H_2O (1,000 gpm @ 290 ft H_2O)	3,785 lpm @ 88 m H_2O (1,000 gpm @ 290 ft H_2O)	1 (1)
20	Fire Service Booster Pump	Two-stage horizontal centrifugal	2,650 lpm @ 64 m H_2O (700 gpm @ 210 ft H_2O)	2,650 lpm @ 64 m H_2O (700 gpm @ 210 ft H_2O)	2,650 lpm @ 64 m H_2O (700 gpm @ 210 ft H_2O)	1 (1)
21	Raw Water Pumps	Stainless steel, single suction	20,101 lpm @ 43 m H_2O (5,310 gpm @ 140 ft H_2O)	20,933 lpm @ 43 m H_2O (5,530 gpm @ 140 ft H_2O)	23,280 lpm @ 43 m H_2O (6,150 gpm @ 140 ft H_2O)	2 (1)
22	Filtered Water Pumps	Stainless steel, single suction	757 lpm @ 49 m H_2O (200 gpm @ 160 ft H_2O)	795 lpm @ 49 m H_2O (210 gpm @ 160 ft H_2O)	871 lpm @ 49 m H_2O (230 gpm @ 160 ft H_2O)	2 (1)
23	Filtered Water Tank	Vertical, cylindrical	738,155 liter (195,000 gal)	760,868 liter (201,000 gal)	817,649 liter (216,000 gal)	1 (0)
24	Makeup Water Demineralizer	Multi-media filter, cartridge filter, RO membrane assembly, electrodeionization unit	984 lpm (260 gpm)	1,022 lpm (270 gpm)	1,098 lpm (290 gpm)	1 (1)
25	Liquid Waste Treatment System	--	10 years, 24-hour storm	10 years, 24-hour storm	10 years, 24-hour storm	1 (0)

ACCOUNT 4 BOILER AND ACCESSORIES

Equipment No.	Description	Type	Design Condition			Opr Qty. (Spares)
			Case 1E	Case 1F	Case 1G	
1	Boiler	Supercritical, drum, wall-fired, low NOx burners, overfire air	2,499,294 kg/hr steam @ 25.5 MPa/602°C/602°C (5,510,000 lb/hr steam @ 3,700 psig/1,115°F/1,115°F)	2,562,797 kg/hr steam @ 25.5 MPa/602°C/602°C (5,650,000 lb/hr steam @ 3,700 psig/1,115°F/1,115°F)	2,744,234 kg/hr steam @ 25.5 MPa/602°C/602°C (6,050,000 lb/hr steam @ 3,700 psig/1,115°F/1,115°F)	1 (0)
2	Primary Air Fan	Centrifugal	327,494 kg/hr, 4,468 m^3/min @ 123 cm WG (722,000 lb/hr, 157,800 acfm @ 48 in. WG)	336,112 kg/hr, 4,584 m^3/min @ 123 cm WG (741,000 lb/hr, 161,900 acfm @ 48 in. WG)	359,699 kg/hr, 4,907 m^3/min @ 123 cm WG (793,000 lb/hr, 173,300 acfm @ 48 in. WG)	2 (0)
3	Forced Draft Fan	Centrifugal	1,066,396 kg/hr, 14,546 m^3/min @ 51 cm WG (2,351,000 lb/hr, 513,700 acfm @ 20 in. WG)	1,094,065 kg/hr, 14,929 m^3/min @ 51 cm WG (2,412,000 lb/hr, 527,200 acfm @ 20 in. WG)	1,171,175 kg/hr, 15,974 m^3/min @ 51 cm WG (2,582,000 lb/hr, 564,100 acfm @ 20 in. WG)	2 (0)
4	Induced Draft Fan	Centrifugal	1,550,379 kg/hr, 33,176 m^3/min @ 91 cm WG (3,418,000 lb/hr, 1,171,600 acfm @ 36 in. WG)	1,590,748 kg/hr, 34,045 m^3/min @ 91 cm WG (3,507,000 lb/hr, 1,202,300 acfm @ 36 in. WG)	1,702,332 kg/hr, 36,430 m^3/min @ 91 cm WG (3,753,000 lb/hr, 1,286,500 acfm @ 36 in. WG)	2 (0)
5	SCR Reactor Vessel	Space for spare layer	3,102,572 kg/hr (6,840,000 lb/hr)	3,179,683 kg/hr (7,010,000 lb/hr)	3,406,479 kg/hr (7,510,000 lb/hr)	2 (0)
6	SCR Catalyst	--	--	--	--	3 (0)
7	Dilution Air Blower	Centrifugal	57 m^3/min @ 108 cm WG (2,000 acfm @ 42 in. WG)	57 m^3/min @ 108 cm WG (2,000 acfm @ 42 in. WG)	62 m^3/min @ 108 cm WG (2,200 acfm @ 42 in. WG)	2 (1)
8	Ammonia Storage	Horizontal tank	60,567 liter (16,000 gal)	64,352 liter (17,000 gal)	68,137 liter (18,000 gal)	5 (0)
9	Ammonia Feed Pump	Centrifugal	12 lpm @ 91 m H_2O (3 gpm @ 300 ft H_2O)	12 lpm @ 91 m H_2O (3 gpm @ 300 ft H_2O)	13 lpm @ 91 m H_2O (3 gpm @ 300 ft H_2O)	2 (1)

ACCOUNT 5 FLUE GAS CLEANUP

Equipment No.	Description	Type	Design Condition			Opr Qty. (Spares)
			Case 1E	Case 1F	Case 1G	
1	Fabric Filter	Single stage, high-ratio with pulse-jet online cleaning system	1,550,379 kg/hr (3,418,000 lb/hr) 99.8% efficiency	1,590,748 kg/hr (3,507,000 lb/hr) 99.8% efficiency	1,702,332 kg/hr (3,753,000 lb/hr) 99.8% efficiency	2 (0)
2	Absorber Module	Counter-current open spray	51,169 m^3/min (1,807,000 acfm)	52,499 m^3/min (1,854,000 acfm)	56,181 m^3/min (1,984,000 acfm)	1 (0)
3	Recirculation Pumps	Horizontal centrifugal	177,914 lpm @ 64 m H_2O (47,000 gpm @ 210 ft H_2O)	181,700 lpm @ 64 m H_2O (48,000 gpm @ 210 ft H_2O)	196,841 lpm @ 64 m H_2O (52,000 gpm @ 210 ft H_2O)	5 (1)
4	Bleed Pumps	Horizontal centrifugal	5,602 lpm (1,480 gpm) at 20 wt% solids	5,754 lpm (1,520 gpm) at 20 wt% solids	6,170 lpm (1,630 gpm) at 20 wt% solids	2 (1)
5	Oxidation Air Blowers	Centrifugal	229 m^3/min @ 0.3 MPa (8,100 acfm @ 42 psia)	235 m^3/min @ 0.3 MPa (8,310 acfm @ 42 psia)	251 m^3/min @ 0.3 MPa (8,870 acfm @ 42 psia)	2 (1)
6	Agitators	Side entering	50 hp	50 hp	50 hp	5 (1)
7	Dewatering Cyclones	Radial assembly, 5 units each	1,401 lpm (370 gpm) per cyclone	1,438 lpm (380 gpm) per cyclone	1,552 lpm (410 gpm) per cyclone	2 (0)
8	Vacuum Filter Belt	Horizontal belt	44 tonne/hr (49 tph) of 50 wt % slurry	45 tonne/hr (50 tph) of 50 wt % slurry	49 tonne/hr (54 tph) of 50 wt % slurry	2 (1)
9	Filtrate Water Return Pumps	Horizontal centrifugal	871 lpm @ 12 m H_2O (230 gpm @ 40 ft H_2O)	871 lpm @ 12 m H_2O (230 gpm @ 40 ft H_2O)	946 lpm @ 12 m H_2O (250 gpm @ 40 ft H_2O)	1 (1)
10	Filtrate Water Return Storage Tank	Vertical, lined	567,812 lpm (150,000 gal)	567,812 lpm (150,000 gal)	605,666 lpm (160,000 gal)	1 (1)
11	Process Makeup Water Pumps	Horizontal centrifugal	568 lpm @ 21 m H_2O (150 gpm @ 70 ft H_2O)	568 lpm @ 21 m H_2O (150 gpm @ 70 ft H_2O)	606 lpm @ 21 m H_2O (160 gpm @ 70 ft H_2O)	1 (1)

ACCOUNT 5B CARBON DIOXIDE RECOVERY

Equipment No.	Description	Type	Design Condition			Opr Qty. (Spares)
			Case 1E	Case 1F	Case 1G	
1	Econamine FG Plus	Amine-based CO_2 capture technology	1,640,190 kg/h (3,616,000 lb/h) 20.6 wt % CO_2 concentration	1,683,281 kg/h (3,711,000 lb/h) 20.6 wt % CO_2 concentration	1,801,215 kg/h (3,971,000 lb/h) 20.6 wt % CO_2 concentration	2 (0)
2	Econamine Condensate Pump	Centrifugal	14,650 lpm @ 52 m H_2O (3,870 gpm @ 170 ft H_2O)	16,202 lpm @ 52 m H_2O (4,280 gpm @ 170 ft H_2O)	21,236 lpm @ 52 m H_2O (5,610 gpm @ 170 ft H_2O)	1 (1)
3	CO_2 Compressor	Centrifugal	303,707 kg/h @ 15.3 MPa (669,559 lb/h @ 2,215 psia)	328,968 kg/h @ 15.3 MPa (725,250 lb/h @ 2,215 psia)	366,853 kg/h @ 15.3 MPa (808,773 lb/h @ 2,215 psia)	2 (0)

ACCOUNT 6 COMBUSTION TURBINE/ACCESSORIES

N/A

ACCOUNT 7 DUCTING AND STACK

Equipment No.	Description	Type	Design Condition			Opr Qty. (Spares)
			Case 1E	Case 1F	Case 1G	

Equipment No.	Description	Type	Design Condition			Opr Qty. (Spares)
			Case 1E	Case 1F	Case 1G	
1	Stack	Reinforced concrete with FRP liner	152 m (500 ft) high x 5.6 m (18 ft) diameter	152 m (500 ft) high x 5.6 m (18 ft) diameter	152 m (500 ft) high x 5.8 m (19 ft) diameter	1 (0)

ACCOUNT 8 STEAM TURBINE GENERATOR

Equipment No.	Description	Type	Design Condition			Opr Qty. (Spares)
			Case 1E	Case 1F	Case 1G	
1	Steam Turbine Generator	Commercially available, advanced steam turbine	696 MW 24.1 MPa/593°C/593°C (3500 psig/ 1100°F/1100°F)	703 MW 24.1 MPa/593°C/593°C (3500 psig/ 1100°F/1100°F)	715 MW 24.1 MPa/593°C/593°C (3500 psig/ 1100°F/1100°F)	1 (0)
2	Steam Turbine Generator	Hydrogen cooled, static excitation	770 MVA @ 0.9 p.f., 24 kV, 60 Hz, 3-phase	780 MVA @ 0.9 p.f., 24 kV, 60 Hz, 3-phase	790 MVA @ 0.9 p.f., 24 kV, 60 Hz, 3-phase	1 (0)
3	Surface Condenser	Single pass, divided waterbox including vacuum pumps	1,910 GJ/hr (1,810 MMBtu/hr), Inlet water temperature 16°C (60°F), Water temperature rise 11°C (20°F)	1,836 GJ/hr (1,740 MMBtu/hr), Inlet water temperature 16°C (60°F), Water temperature rise 11°C (20°F)	1,540 GJ/hr (1,460 MMBtu/hr), Inlet water temperature 16°C (60°F), Water temperature rise 11°C (20°F)	1 (0)

ACCOUNT 9 COOLING WATER SYSTEM

Equipment No.	Description	Type	Design Condition			Opr Qty. (Spares)
			Case 1E	Case 1F	Case 1G	
1	Circulating Water Pumps	Vertical, wet pit	1,014,500 lpm @ 30 m (268,000 gpm @ 100 ft)	1,056,100 lpm @ 30 m (279,000 gpm @ 100 ft)	1,173,500 lpm @ 30 m (310,000 gpm @ 100 ft)	2 (1)
2	Cooling Tower	Evaporative, mechanical draft, multi-cell	11°C (51.5°F) wet bulb / 16°C (60°F) CWT / 27°C (80°F) HWT / 5666 GJ/hr (5370 MMBtu/hr) heat duty	11°C (51.5°F) wet bulb / 16°C (60°F) CWT / 27°C (80°F) HWT / 5898 GJ/hr (5590 MMBtu/hr) heat duty	11°C (51.5°F) wet bulb / 16°C (60°F) CWT / 27°C (80°F) HWT / 6531 GJ/hr (6190 MMBtu/hr) heat duty	1 (0)

ACCOUNT 10 ASH/SPENT SORBENT RECOVERY AND HANDLING

Equipment No.	Description	Type	Design Condition			Opr Qty. (Spares)
			Case 1E	Case 1F	Case 1G	
1	Economizer Hopper (part of boiler scope of supply)	--	--	--	--	4 (0)
2	Bottom Ash Hopper (part of boiler scope of supply)	--	--	--	--	2 (0)
3	Clinker Grinder	--	5.4 tonne/hr (6 tph)	5.4 tonne/hr (6 tph)	6.4 tonne/hr (7 tph)	1 (1)
4	Pyrites Hopper (part of pulverizer scope of supply included with boiler)	--	--	--	--	6 (0)
5	Hydroejectors	--	--	--	--	12 (0)
6	Economizer /Pyrites Transfer Tank	--	--	--	--	1 (0)
7	Ash Sluice Pumps	Vertical, wet pit	227 lpm @ 17 m H_2O (60 gpm @ 56 ft H_2O)	227 lpm @ 17 m H_2O (60 gpm @ 56 ft H_2O)	227 lpm @ 17 m H_2O (60 gpm @ 56 ft H_2O)	1 (1)
8	Ash Seal Water Pumps	Vertical, wet pit	7,571 lpm @ 9 m H_2O (2000 gpm @ 28 ft H_2O)	7,571 lpm @ 9 m H_2O (2000 gpm @ 28 ft H_2O)	7,571 lpm @ 9 m H_2O (2000 gpm @ 28 ft H_2O)	1 (1)
9	Hydrobins	--	227 lpm (60 gpm)	227 lpm (60 gpm)	227 lpm (60 gpm)	1 (1)
10	Baghouse Hopper (part of baghouse scope of supply)	--	--	--	--	24 (0)

Equipment No.	Description	Type	Design Condition			Opr Qty. (Spares)
			Case 1E	Case 1F	Case 1G	
11	Air Heater Hopper (part of boiler scope of supply)	--	--	--	--	10 (0)
12	Air Blower	--	20 m^3/min @ 0.2 MPa (710 scfm @ 24 psi)	21 m^3/min @ 0.2 MPa (730 scfm @ 24 psi)	22 m^3/min @ 0.2 MPa (780 scfm @ 24 psi)	1 (1)
13	Fly Ash Silo	Reinforced concrete	680 tonne (1,500 ton)	680 tonne (1,500 ton)	726 tonne (1,600 ton)	2 (0)
14	Slide Gate Valves	--	--	--	--	2 (0)
15	Unloader	--	--	--	--	1 (0)
16	Telescoping Unloading Chute	--	127 tonne/hr (140 tph)	127 tonne/hr (140 tph)	136 tonne/hr (150 tph)	1 (0)

ACCOUNT 11 ACCESSORY ELECTRIC PLANT

Equipment No.	Description	Type	Design Condition			Opr Qty. (Spares)
			Case 1E	Case 1F	Case 1G	
1	STG Transformer	Oil-filled	24 kV/345 kV, 650 MVA, 3-ph, 60 Hz	24 kV/345 kV, 650 MVA, 3-ph, 60 Hz	24 kV/345 kV, 650 MVA, 3-ph, 60 Hz	1 (0)
2	Auxiliary Transformer	Oil-filled	24 kV/4.16 kV, 121 MVA, 3-ph, 60 Hz	24 kV/4.16 kV, 128 MVA, 3-ph, 60 Hz	24 kV/4.16 kV, 141 MVA, 3-ph, 60 Hz	1 (1)
3	Low Voltage Transformer	Dry ventilated	4.16 kV/480 V, 18 MVA, 3-ph, 60 Hz	4.16 kV/480 V, 19 MVA, 3-ph, 60 Hz	4.16 kV/480 V, 21 MVA, 3-ph, 60 Hz	1 (1)
4	STG Isolated Phase Bus Duct and Tap Bus	Aluminum, self-cooled	24 kV, 3-ph, 60 Hz	24 kV, 3-ph, 60 Hz	24 kV, 3-ph, 60 Hz	1 (0)
5	Medium Voltage Switchgear	Metal Clad	4.16 kV, 3-ph, 60 Hz	4.16 kV, 3-ph, 60 Hz	4.16 kV, 3-ph, 60 Hz	1 (1)
6	Low Voltage Switchgear	Metal Enclosed	480 V, 3-ph, 60 Hz	480 V, 3-ph, 60 Hz	480 V, 3-ph, 60 Hz	1 (1)
7	Emergency Diesel Generator	Sized for emergency shutdown	750 kW, 480 V, 3-ph, 60 Hz	750 kW, 480 V, 3-ph, 60 Hz	750 kW, 480 V, 3-ph, 60 Hz	1 (0)

ACCOUNT 12 INSTRUMENTATION AND CONTROL

Equipment No.	Description	Type	Design Condition			Opr Qty. (Spares)
			Case 1E	Case 1F	Case 1G	
1	DCS - Main Control	Monitor/keyboard; Operator printer (laser color); Engineering printer (laser B&W)	Operator Stations/Printers and Engineering Stations/Printers	Operator Stations/Printers and Engineering Stations/Printers	Operator Stations/Printers and Engineering Stations/Printers	1 (0)
2	DCS – Processor	Microprocessor with redundant input/output	N/A	N/A	N/A	1 (0)
3	DCS - Data Highway	Fiber optic	Fully redundant, 25% spare	Fully redundant, 25% spare	Fully redundant, 25% spare	1 (0)

3.2.3 Economic Analysis for the Supercritical PC Cases

The capital and operating costs for Cases 1A through 1G are presented in Section 3.2.4. A cost and performance summary table (Exhibit 3-72) for the SC PC cases is shown in Section 3.2.5.

Due to the range of CO_2 capture levels analyzed in Case 1, the Econamine capital and operating costs vary for the seven cases. While a factored approach that relies on the quantity of CO_2 captured for equipment sizing and cost estimation was employed, the cost estimates for the Econamine system were also developed based, in part, on output data from the ProTreat™ simulations. In particular, the ProTreat™ model output provided absorption and stripping column diameters for each case, which were used to determine the required number of absorption trains.

For this analysis, it was assumed that the maximum absorption column diameter is 20 meters, based on information released by Fluor [4]. As a result, cost estimates for three CO_2 capture levels – 30 percent (1A), 50 percent (1B), and 70 percent (1C) – are based on a single absorption and compression train. To calculate the capital cost for a single absorption train, it was assumed that the absorption columns represent 40 percent of the total capital cost for a two-train Econamine system.

3.2.4 Capital and Operating Cost Results

The capital and operating costs for Cases 1A through 1G are shown in Exhibit 3-58 through Exhibit 3-71. The capital costs for each case include the TPC, the owner's costs, TOC, and the total as-spent capital TASC cost. The capital and operating cost estimating methodology is explained in Section 2.7.

Exhibit 3-58 Case 1A (30%) Capital Costs

Department:	NETL Office of Systems Analysis and Planning			**Cost Base:**	Jun 2007
Project:	CO2 Capture Sensitivity Systems Analysis			**Prepared:**	14-Jun-10
Case:	Case 1A - Supercritical PC w/ 30% CO2 Capture				**x $1, 000**
Plant Size:	549.99 MW, net	Capital Charge Factor 0.1773	Capacity Factor 0.85		

Acct No.	Item/Description	Equipment Cost	Material Cost	Labor Direct	Labor Indirect	Bare Erected	Eng'g CM H.O. & %	Eng'g CM H.O. & Total	Process Cont. %	Process Cont. Total	Project Cont. %	Project Cont. Total	TOTAL PLANT COST $	TOTAL PLANT COST $/kW
1	COAL HANDLING SYSTEM													
1.1	Coal Receive & Unload	3,509	0	1,603	0	5,112	8.9%	456	0%	0	15.0%	835	6,404	12
1.2	Coal Stackout & Reclaim	4,535	0	1,028	0	5,563	8.8%	487	0%	0	15.0%	907	6,957	13
1.3	Coal Conveyors & Yd Crus	4,217	0	1,017	0	5,233	8.8%	459	0%	0	15.0%	854	6,546	12
1.4	Other Coal Handling	1,103	0	235	0	1,338	8.7%	117	0%	0	15.0%	218	1,674	3
1.5	Sorbent Receive & Unload	144	0	43	0	188	8.8%	17	0%	0	15.0%	31	235	0
1.6	Sorbent Stackout & Reclaim	2,328	0	427	0	2,755	8.7%	240	0%	0	15.0%	449	3,444	6
1.7	Sorbent Conveyors	831	180	204	0	1,214	8.7%	105	0%	0	15.0%	198	1,517	3
1.8	Other Sorbent Handling	502	118	263	0	883	8.8%	78	0%	0	15.0%	144	1,105	2
1.9	Coal & Sorbent Hnd.Foundations	0	4,315	5,444	0	9,759	9.3%	912	0%	0	15.0%	1,601	12,272	22
	SUBTOTAL 1.	**$17,169**	**$4,613**	**$10,263**	**$0**	**$32,045**		**$2,871**		**$0**		**$5,237**	**$40,154**	**$73**
2	COAL PREP & FEED SYSTEMS													
2.1	Coal Crushing & Drying	2,015	0	393	0	2,408	8.7%	210	0%	0	15.0%	393	3,011	5
2.2	Prepared Coal Storage & Feed	5,160	0	1,126	0	6,286	8.7%	550	0%	0	15.0%	1,025	7,861	14
2.3	Slurry Prep & Feed	0	0	0	0	0	0.0%	0	0%	0	0.0%	0	0	0
2.4	Misc. Coal Prep & Feed	0	0	0	0	0	0.0%	0	0%	0	0.0%	0	0	0
2.5	Sorbent Prep Equipment	3,958	171	822	0	4,951	8.7%	431	0%	0	15.0%	807	6,190	11
2.6	Sorbent Storage & Feed	477	0	183	0	660	8.9%	59	0%	0	15.0%	108	826	2
2.7	Sorbent Injection System	0	0	0	0	0	0.0%	0	0%	0	0.0%	0	0	0
2.8	Booster Air Supply System	0	0	0	0	0	0.0%	0	0%	0	0.0%	0	0	0
2.9	Coal & Sorbent Feed Foundation	0	507	425	0	932	9.2%	86	0%	0	15.0%	153	1,171	2
	SUBTOTAL 2.	**$11,611**	**$678**	**$2,949**	**$0**	**$15,238**		**$1,336**		**$0**		**$2,486**	**$19,059**	**$35**
3	FEEDWATER & MISC. BOP SYSTEMS													
3.1	Feedwater System	18,673	0	6,032	0	24,704	8.8%	2,163	0%	0	15.0%	4,030	30,897	56
3.2	Water Makeup & Pretreating	4,471	0	1,439	0	5,910	9.4%	554	0%	0	20.0%	1,293	7,757	14
3.3	Other Feedwater Subsystems	5,717	0	2,416	0	8,132	8.9%	725	0%	0	15.0%	1,329	10,186	19
3.4	Service Water Systems	876	0	477	0	1,353	9.3%	126	0%	0	20.0%	296	1,775	3
3.5	Other Boiler Plant Systems	7,108	0	7,017	0	14,125	9.4%	1,325	0%	0	15.0%	2,318	17,768	32
3.6	FO Supply Sys & Nat Gas	259	0	324	0	583	9.3%	54	0%	0	15.0%	96	733	1
3.7	Waste Treatment Equipment	4,415	0	2,517	0	6,932	9.7%	671	0%	0	20.0%	1,521	9,124	17
3.8	Misc. Power Plant Equipment	2,750	0	840	0	3,590	9.6%	345	0%	0	20.0%	787	4,722	9
	SUBTOTAL 3.	**$44,268**	**$0**	**$21,062**	**$0**	**$65,330**		**$5,963**		**$0**		**$11,668**	**$82,961**	**$151**
4	PC BOILER & ACCESSORIES													
4.1	PC Boiler	159,566	0	89,533	0	249,099	9.7%	24,128	0.0%	0	10.0%	27,323	300,549	546
4.2	SCR (w/4.1)	0	0	0	0	0	0%	0	0%	0	0.0%	0	0	0
4.3	Open	0	0	0	0	0	0%	0	0%	0	0.0%	0	0	0
4.4	Boiler BoP (w/ID Fans)	0	0	0	0	0	0%	0	0%	0	0.0%	0	0	0
4.5	Primary Air System	w/4.1	0	w/4.1	0	0	0%	0	0%	0	0.0%	0	0	0
4.6	Secondary Air System	w/4.1	0	w/4.1	0	0	0%	0	0%	0	0.0%	0	0	0
4.7	Major Component Rigging	0	w/4.1	w/4.1	0	0	0%	0	0%	0	0.0%	0	0	0
4.8	PC Foundations	0	w/14.1	w/14.1	0	0	0%	0	0%	0	0.0%	0	0	0
	SUBTOTAL 4.	**$159,566**	**$0**	**$89,533**	**$0**	**$249,099**		**$24,128**		**$0**		**$27,323**	**$300,549**	**$546**

Exhibit 3-58 Case 1A (30%) Capital Costs (continued)

		Department:	NETL Office of Systems Analysis and Planning									**Cost Base:**	Jun 2007	
		Project:	CO2 Capture Sensitivity Systems Analysis									**Prepared:**	14-Jun-10	
		Case:	Case 1A - Supercritical PC w/ 30% CO2 Capture										**x $1, 000**	
		Plant Size:	549.99	MW, net		Capital Charge Factor	0.1773		Capacity Factor	0.85				
			Equipment	**Material**	**Labor**		**Bare**	**Eng'g CM H.O. &**		**Process Cont.**		**Project Cont.**		**TOTAL PLANT COST**	
Acct No.		**Item/Description**	**Cost**	**Cost**	**Direct**	**Indirect**	**Erected**	**%**	**Total**	**%**	**Total**	**%**	**Total**	**$**	**$/kW**
5A		FLUE GAS CLEANUP							*						
	5.1	Absorber Vessels & Accessories	68,203	0	14,683	0	82,886	9.5%	7,845	0%	0	10.0%	9,073	99,804	181
	5.2	Other FGD	3,562	0	4,036	0	7,598	9.6%	732	0%	0	10.0%	833	9,163	17
	5.3	Bag House & Accessories	17,113	0	10,860	0	27,973	9.6%	2,676	0%	0	10.0%	3,065	33,714	61
	5.4	Other Particulate Removal Materials	1,121	0	1,199	0	2,320	9.6%	223	0%	0	10.0%	254	2,798	5
	5.5	Gypsum Dewatering System	4,680	0	795	0	5,475	9.4%	517	0%	0	10.0%	599	6,592	12
	5.6	Mercury Removal System	0	0	0	0	0	0.0%	0	0%	0	0.0%	0	0	0
	5.7	Open	0	0	0	0	0	0.0%	0	0%	0	0.0%	0	0	0
	5.8	Open	0	0	0	0	0	0.0%	0	0%	0	0.0%	0	0	0
	5.9	Open	0	0	0	0	0	0.0%	0	0%	0	0.0%	0	0	0
		SUBTOTAL 5A.	**$94,679**	**$0**	**$31,573**	**$0**	**$126,252**		**$11,993**		**$0**		**$13,825**	**$152,070**	**$276**
5B		CO2 REMOVAL & COMPRESSION													
	5B.1	CO2 Removal System	85,601	0	25,921	0	111,521	9.5%	10,584	20%	22,304	20.0%	28,882	173,291	315
	5B.2	CO2 Compression & Drying	9,770	0	3,051	0	12,821	9.5%	1,217	0%	0	20.0%	2,808	16,846	31
	5B.3	CO2 Pipeline											0	0	0
	5B.4	CO2 Storage											0	0	0
	5B.5	CO2 Monitoring											0	0	0
		SUBTOTAL 5B.	**$95,371**	**$0**	**$28,972**	**$0**	**$124,343**		**$11,801**		**$22,304**		**$31,690**	**$190,138**	**$346**
6		COMBUSTION TURBINE/ACCESSORIES													
	6.1	Combustion Turbine Generator	0	0	0	0	0	10%	0	0%	0	0.0%	0	0	0
	6.2	Combustion Turbine Accessories	0	0	0	0	0	10%	0	0%	0	0.0%	0	0	0
	6.3	Compressed Air Piping	0	0	0	0	0	10%	0	0%	0	0.0%	0	0	0
	6.4	Combustion Turbine Foundations	0	0	0	0	0	10%	0	0%	0	0.0%	0	0	0
		SUBTOTAL 6.	**$0**	**$0**	**$0**	**$0**	**$0**		**$0**		**$0**		**$0**	**$0**	**$0**
7		HRSG, DUCTING & STACK													
	7.1	Flue Gas Recycle Heat Exchanger	N/A	0	N/A	0	0	0%	0	0%	0	0.0%	0	0	0
	7.2	SCR System	0	0	0	0	0	0%	0	0%	0	0.0%	0	0	0
	7.3	Ductwork	8,711	0	5,597	0	14,308	8.7%	1,250	0%	0	15.0%	2,334	17,892	33
	7.4	Stack	8,616	0	5,041	0	13,657	9.6%	1,305	0%	0	10.0%	1,496	16,458	30
	7.9	HRSG, Duct & Stack Foundations	0	989	1,124	0	2,113	9.3%	197	0%	0	20.0%	462	2,771	5
		SUBTOTAL 7.	**$17,327**	**$989**	**$11,762**	**$0**	**$30,078**		**$2,752**		**$0**		**$4,292**	**$37,121**	**$67**
8		STEAM TURBINE GENERATOR													
	8.1	Steam TG & Accessories	51,572	0	6,843	0	58,415	9.6%	5,593	0%	0	10.0%	6,401	70,409	128
	8.2	Turbine Plant Auxiliaries	347	0	744	0	1,091	9.7%	106	0%	0	10.0%	120	1,317	2
	8.3	Condenser & Auxiliaries	5,594	0	2,084	0	7,678	9.5%	730	0%	0	10.0%	841	9,248	17
	8.4	Steam Piping	16,109	0	7,943	0	24,052	8.3%	2,007	0%	0	15.0%	3,909	29,968	54
	8.9	TG Foundations	0	1,093	1,726	0	2,819	9.4%	265	0%	0	20.0%	617	3,701	7
		SUBTOTAL 8.	**$73,622**	**$1,093**	**$19,340**	**$0**	**$94,055**		**$8,701**		**$0**		**$11,887**	**$114,643**	**$208**
9		COOLING WATER SYSTEM													
	9.1	Cooling Towers	9,453	0	2,944	0	12,396	9.5%	1,177	0%	0	10.0%	1,357	14,931	27
	9.2	Circulating Water Pumps	1,555	0	119	0	1,674	8.6%	143	0%	0	10.0%	182	1,999	4
	9.3	Circ. Water System Auxiliaries	454	0	61	0	515	9.4%	49	0%	0	10.0%	56	619	1
	9.4	Circ. Water Piping	0	3,599	3,488	0	7,088	9.2%	653	0%	0	15.0%	1,161	8,902	16
	9.5	Make-up Water System	439	0	587	0	1,026	9.5%	97	0%	0	15.0%	168	1,291	2
	9.6	Component Cooling Water System	360	0	286	0	646	9.4%	61	0%	0	15.0%	106	812	1
	9.9	Circ. Water System Foundations	0	2,226	3,537	0	5,763	9.4%	542	0%	0	20.0%	1,261	7,567	14
		SUBTOTAL 9.	**$12,261**	**$5,826**	**$11,022**	**$0**	**$29,108**		**$2,722**		**$0**		**$4,292**	**$36,122**	**$66**

Exhibit 3-58 Case 1A (30%) Capital Costs (continued)

		Department:	NETL Office of Systems Analysis and Planning									**Cost Base:**	Jun 2007	
		Project:	CO2 Capture Sensitivity Systems Analysis									**Prepared:**	14-Jun-10	
		Case:	Case 1A - Supercritical PC w/ 30% CO2 Capture										**x $1, 000**	
		Plant Size:	549.99	MW, net		Capital Charge Factor	0.1773		Capacity Factor	0.85				
			Equipment	**Material**	**Labor**		**Bare**	**Eng'g CM H.O. &**		**Process Cont.**		**Project Cont.**	**TOTAL PLANT COST**	
Acct No.		**Item/Description**	**Cost**	**Cost**	**Direct**	**Indirect**	**Erected**	**%**	**Total**	**%**	**Total**	**%**	**Total**	**$**	**$/kW**
10		ASH/SPENT SORBENT HANDLING SYS													
	10.1	Ash Coolers	N/A	0	N/A	0	0	0%	0	0%	0	0.0%	0	0	0
	10.2	Cyclone Ash Letdown	N/A	0	N/A	0	0	0%	0	0%	0	0.0%	0	0	0
	10.3	HGCU Ash Letdown	N/A	0	N/A	0	0	0%	0	0%	0	0.0%	0	0	0
	10.4	High Temperature Ash Piping	N/A	0	N/A	0	0	0%	0	0%	0	0.0%	0	0	0
	10.5	Other Ash Recovery Equipment	N/A	0	N/A	0	0	0%	0	0%	0	0.0%	0	0	0
	10.6	Ash Storage Silos	611	0	1,882	0	2,492	9.7%	243	0%	0	10.0%	273	3,008	5
	10.7	Ash Transport & Feed Equipment	3,953	0	4,049	0	8,002	9.5%	757	0%	0	10.0%	876	9,635	18
	10.8	Misc. Ash Handling Equipment	0	0	0	0	0	0.0%	0	0%	0	0.0%	0	0	0
	10.9	Ash/Spent Sorbent Foundation	0	145	171	0	316	9.3%	29	0%	0	20.0%	69	415	1
		SUBTOTAL 10.	**$4,564**	**$145**	**$6,102**	**$0**	**$10,811**		**$1,029**		**$0**		**$1,219**	**$13,058**	**$24**
11		ACCESSORY ELECTRIC PLANT													
	11.1	Generator Equipment	1,601	0	260	0	1,861	9.3%	172	0%	0	7.5%	152	2,186	4
	11.2	Station Service Equipment	3,457	0	1,136	0	4,594	9.6%	439	0%	0	7.5%	377	5,410	10
	11.3	Switchgear & Motor Control	3,975	0	676	0	4,651	9.3%	431	0%	0	10.0%	508	5,589	10
	11.4	Conduit & Cable Tray	0	2,492	8,617	0	11,109	9.6%	1,063	0%	0	15.0%	1,826	13,998	25
	11.5	Wire & Cable	0	4,702	9,078	0	13,780	8.4%	1,161	0%	0	15.0%	2,241	17,183	31
	11.6	Protective Equipment	260	0	885	0	1,146	9.8%	112	0%	0	10.0%	126	1,383	3
	11.7	Standby Equipment	1,278	0	29	0	1,307	9.5%	124	0%	0	10.0%	143	1,574	3
	11.8	Main Power Transformers	7,303	0	123	0	7,426	7.6%	564	0%	0	10.0%	799	8,789	16
	11.9	Electrical Foundations	0	311	762	0	1,073	9.5%	102	0%	0	20.0%	235	1,410	3
		SUBTOTAL 11.	**$17,875**	**$7,506**	**$21,566**	**$0**	**$46,947**		**$4,168**		**$0**		**$6,408**	**$57,523**	**$105**
12		INSTRUMENTATION & CONTROL													
	12.1	PC Control Equipment	w/12.7	0	w/12.7	0	0	0%	0	0%	0	0.0%	0	0	0
	12.2	Combustion Turbine Control	N/A	0	N/A	0	0	0%	0	0%	0	0.0%	0	0	0
	12.3	Steam Turbine Control	w/8.1	0	w/8.1	0	0	0%	0	0%	0	0.0%	0	0	0
	12.4	Other Major Component Control	0	0	0	0	0	0%	0	0%	0	0.0%	0	0	0
	12.5	Signal Processing Equipment	W/12.7	0	w/12.7	0	0	0%	0	0%	0	0.0%	0	0	0
	12.6	Control Boards, Panels & Racks	464	0	278	0	743	9.6%	71	0%	0	15.0%	122	936	2
	12.7	Computer Accessories	4,689	0	819	0	5,508	9.5%	525	0%	0	10.0%	603	6,636	12
	12.8	Instrument Wiring & Tubing	2,541	0	5,041	0	7,582	8.5%	646	0%	0	15.0%	1,234	9,462	17
	12.9	Other I & C Equipment	1,325	0	3,007	0	4,332	9.7%	422	0%	0	10.0%	475	5,229	10
		SUBTOTAL 12.	**$9,019**	**$0**	**$9,145**	**$0**	**$18,165**		**$1,664**		**$0**		**$2,435**	**$22,263**	**$40**
13		IMPROVEMENTS TO SITE													
	13.1	Site Preparation	0	52	1,047	0	1,099	9.9%	108	0%	0	20.0%	241	1,449	3
	13.2	Site Improvements	0	1,737	2,158	0	3,895	9.8%	382	0%	0	20.0%	855	5,133	9
	13.3	Site Facilities	3,113	0	3,070	0	6,184	9.8%	607	0%	0	20.0%	1,358	8,149	15
		SUBTOTAL 13.	**$3,113**	**$1,790**	**$6,274**	**$0**	**$11,177**		**$1,098**		**$0**		**$2,455**	**$14,730**	**$27**

Exhibit 3-58 Case 1A (30%) Capital Costs (continued)

Department:	NETL Office of Systems Analysis and Planning			**Cost Base:**	Jun 2007
Project:	CO2 Capture Sensitivity Systems Analysis			**Prepared:**	27-May-11
Case:	Case 1A - Supercritical PC w/ 30% CO2 Capture				**x $1, 000**
Plant Size:	549.99 MW, net	Capital Charge Factor 0.1773	Capacity Factor 0.85		

Acct No.	Item/Description	Equipment Cost	Material Cost	Labor Direct	Labor Indirect	Bare Erected	Eng'g CM H.O. & %	Eng'g CM H.O. & Total	Process Cont. %	Process Cont. Total	Project Cont. %	Project Cont. Total	TOTAL PLANT COST $	TOTAL PLANT COST $/kW
14	BUILDINGS & STRUCTURES													
14.1	Boiler Building	0	8,705	7,655	0	16,360	9.0%	1,469	0%	0	15.0%	2,674	20,504	37
14.2	Turbine Building	0	12,476	11,627	0	24,103	9.0%	2,170	0%	0	15.0%	3,941	30,214	55
14.3	Administration Building	0	623	659	0	1,281	9.1%	116	0%	0	15.0%	210	1,607	3
14.4	Circulation Water Pumphouse	0	106	84	0	191	8.9%	17	0%	0	15.0%	31	239	0
14.5	Water Treatment Buildings	0	585	533	0	1,118	9.0%	100	0%	0	15.0%	183	1,401	3
14.6	Machine Shop	0	417	280	0	696	8.9%	62	0%	0	15.0%	114	872	2
14.7	Warehouse	0	282	283	0	565	9.0%	51	0%	0	15.0%	92	709	1
14.8	Other Buildings & Structures	0	231	196	0	427	9.0%	38	0%	0	15.0%	70	535	1
14.9	Waste Treating Building & Str.	0	437	1,325	0	1,761	9.4%	166	0%	0	15.0%	289	2,217	4
	SUBTOTAL 14.	**$0**	**$23,861**	**$22,643**	**$0**	**$46,504**		**$4,190**		**$0**		**$7,604**	**$58,298**	**$106**
	Total Cost	**$560,444**	**$46,499**	**$292,207**	**$0**	**$899,149**		**$84,415**		**$22,304**		**$132,820**	**$1,138,688**	**$2,070**

Owner's Costs		
Preproduction Costs		
6 Months All Labor	$8,797	$16
1 Month Maintenance Materials	$1,124	$2
1 Month Non-fuel Consumables	$853	$2
1 Month Waste Disposal	$263	$0
25% of 1 Months Fuel Cost at 100% CF	$1,593	$3
2% of TPC	$22,774	$41
Total	$35,403	$64
Inventory Capital		
60 day supply of fuel and consumables at 100% CF	$14,447	$26
0.5% of TPC (spare parts)	$5,693	$10
Total	$20,140	$37
Initial Cost for Catalyst and Chemicals	$658	$1
Land	$900	$2
Other Owner's Costs	$170,803	$311
Financing Costs	$30,745	$56
Total Overnight Costs (TOC)	**$1,397,338**	**$2,540.7**
TASC Multiplier (IOU, high risk, 35 year)	1.140	
Total As-Spent Cost (TASC)	**$1,592,965**	**$2,896**

Exhibit 3-59 Case 1A Initial and Annual O&M Expenses

INITIAL & ANNUAL O&M EXPENSES			
Case:	Case 1A - Supercritical PC w/ 30% CO2 Capture		
Plant Size (MWe):	549.99	**Heat Rate (Btu/kWh):**	9,695
Primary/Secondary Fuel:	Illinois #6 Bituminous Coal	**Fuel Cost ($/MM Btu):**	1.64
Design/Construction	5 years	**Book Life (yrs):**	30
TPC (Plant Cost) Year:	Jun 2007	**TPI Year:**	2015
Capacity Factor (%):	85	**CO_2 Captured (TPD):**	3881

OPERATING & MAINTENANCE LABOR

Operating Labor

Operating Labor Rate (base):	$34.65	$/hour
Operating Labor Burden:	30.00	% of base
Labor Overhead Charge:	25.00	% of labor

Operating Labor Requirements per Shift:	units/mod.	Total Plant
Skilled Operator	2.0	2.0
Operator	11.3	11.3
Foreman	1.0	1.0
Lab Tech's etc.	2.0	2.0
TOTAL Operating Jobs	16.3	16.3

	Annual Costs $	Annual Costs $/kW-net
Annual Operating Labor Cost (calc'd)	$6,431,885	$11.695
Maintenance Labor Cost (calc'd)	$7,644,005	$13.898
Administrative & Support Labor (calc'd)	$3,518,973	$6.398
Property Taxes & Insurance	$22,773,764	$41.408
TOTAL FIXED OPERATING COSTS	**$40,368,627**	**$73.399**

VARIABLE OPERATING COSTS

	$	$/kWh-net
Maintenance Material Costs (calc'd)	**$11,466,008**	**0.00280**

Consumables	Consumption Initial	Consumption /Day	Unit Cost	Initial Cost	$	$/kWh-net
Water (/1000 gallons)	0	4,707	1.08	$0	$1,577,096	0.00039
Chemicals						
MU & WT Chem. (lb)	0	22,784	0.17	$0	$1,201,673	0.00029
Limestone (ton)	0	555	21.63	$0	$3,724,204	0.00091
Carbon (Hg Removal) (lb)	0	0	1.05	$0	$0	0.00000
MEA Solvent (ton)	271	0.39	2249.89	$609,715	$272,030	0.00007
Caustic Soda, NaOH (ton)	19	1.91	433.68	$8,305	$257,649	0.00006
Sulfuric acid, H_2SO_4 (ton)	18	1.83	138.78	$2,536	$78,675	0.00002
Corrosion Inhibitor	0	0	0.00	$37,484	$1,810	0.00000
Activated C, MEA (lb)	0	459	1.05	$0	$149,561	0.00004
Ammonia, 28% soln (ton)	0	17	129.80	$0	$677,925	0.00017
Subtotal Chemicals				**$658,040**	**$6,363,527**	**0.00155**
Other						
Supplemental Fuel (MMBtu)	0	0	0.00	$0	$0	0.00000
SCR Catalyst Replacement	w/equip.	0.42	5,775.94	$0	$759,439	0.00019
Emission Penalties	0	0	0.00	$0	$0	0.00000
Subtotal Other				**$0**	**$759,439**	**0.00019**
Waste Disposal						
Spent Mercury Catalyst (lb)	0	0	0.31	$0	$0	0.00000
Flyash (ton)	0	425	16.23	$0	$2,142,442	0.00052
Bottom Ash (ton)	0	106	16.23	$0	$535,611	0.00013
Subtotal Solid Waste Disposal				**$0**	**$2,678,053**	**0.00065**
By-products & Emissions						
Gypsum (tons)	0	0	0.00	$0	$0	0.00000
Sulfur (tons)	0	0	0.00	$0	$0	0.00000
Subtotal By-Products				**$0**	**$0**	**0.00000**
TOTAL VARIABLE OPERATING COSTS					**$22,844,123**	**0.00558**
Coal FUEL (tons)	**164,544**	**5,485**	**38.19**	**$6,283,126**	**$64,977,999**	**0.01587**

Exhibit 3-60 Case 1B (50%) Capital Costs

Department:	NETL Office of Systems Analysis and Planning			**Cost Base:**	Jun 2007
Project:	CO2 Capture Sensitivity Systems Analysis			**Prepared:**	14-Jun-10
Case:	Case 1B - Supercritical PC w/ 50% CO2 Capture				**x $1, 000**
Plant Size:	549.99 MW, net	Capital Charge Factor 0.1773	Capacity Factor 0.85		

Acct No.	Item/Description	Equipment Cost	Material Cost	Labor Direct	Labor Indirect	Bare Erected	Eng'g CM H.O. & %	Eng'g CM H.O. & Total	Process Cont. %	Process Cont. Total	Project Cont. %	Project Cont. Total	TOTAL PLANT COST $	TOTAL PLANT COST $/kW
1	COAL HANDLING SYSTEM													
1.1	Coal Receive & Unload	3,661	0	1,672	0	5,333	8.9%	476	0%	0	15.0%	871	6,680	12
1.2	Coal Stackout & Reclaim	4,731	0	1,072	0	5,803	8.8%	508	0%	0	15.0%	947	7,258	13
1.3	Coal Conveyors & Yd Crus	4,399	0	1,061	0	5,459	8.8%	479	0%	0	15.0%	891	6,829	12
1.4	Other Coal Handling	1,151	0	245	0	1,396	8.7%	122	0%	0	15.0%	228	1,746	3
1.5	Sorbent Receive & Unload	151	0	45	0	196	8.8%	17	0%	0	15.0%	32	245	0
1.6	Sorbent Stackout & Reclaim	2,432	0	446	0	2,878	8.7%	251	0%	0	15.0%	469	3,598	7
1.7	Sorbent Conveyors	868	188	213	0	1,268	8.7%	110	0%	0	15.0%	207	1,585	3
1.8	Other Sorbent Handling	524	123	275	0	922	8.8%	82	0%	0	15.0%	151	1,154	2
1.9	Coal & Sorbent Hnd.Foundations	0	4,502	5,679	0	10,180	9.3%	952	0%	0	15.0%	1,670	12,802	23
	SUBTOTAL 1.	**$17,916**	**$4,812**	**$10,708**	**$0**	**$33,436**		**$2,996**		**$0**		**$5,465**	**$41,896**	**$76**
2	COAL PREP & FEED SYSTEMS													
2.1	Coal Crushing & Drying	2,108	0	411	0	2,519	8.7%	220	0%	0	15.0%	411	3,149	6
2.2	Prepared Coal Storage & Feed	5,397	0	1,178	0	6,576	8.7%	575	0%	0	15.0%	1,073	8,223	15
2.3	Slurry Prep & Feed	0	0	0	0	0	0.0%	0	0%	0	0.0%	0	0	0
2.4	Misc. Coal Prep & Feed	0	0	0	0	0	0.0%	0	0%	0	0.0%	0	0	0
2.5	Sorbent Prep Equipment	4,138	178	859	0	5,175	8.7%	451	0%	0	15.0%	844	6,470	12
2.6	Sorbent Storage & Feed	499	0	191	0	689	8.9%	61	0%	0	15.0%	113	863	2
2.7	Sorbent Injection System	0	0	0	0	0	0.0%	0	0%	0	0.0%	0	0	0
2.8	Booster Air Supply System	0	0	0	0	0	0.0%	0	0%	0	0.0%	0	0	0
2.9	Coal & Sorbent Feed Foundation	0	529	444	0	974	9.2%	90	0%	0	15.0%	160	1,223	2
	SUBTOTAL 2.	**$12,142**	**$708**	**$3,084**	**$0**	**$15,933**		**$1,397**		**$0**		**$2,599**	**$19,929**	**$36**
3	FEEDWATER & MISC. BOP SYSTEMS													
3.1	Feedwater System	19,570	0	6,321	0	25,891	8.8%	2,267	0%	0	15.0%	4,224	32,382	59
3.2	Water Makeup & Pretreating	4,930	0	1,587	0	6,516	9.4%	611	0%	0	20.0%	1,425	8,553	16
3.3	Other Feedwater Subsystems	5,991	0	2,532	0	8,523	8.9%	760	0%	0	15.0%	1,392	10,675	19
3.4	Service Water Systems	966	0	526	0	1,492	9.3%	138	0%	0	20.0%	326	1,957	4
3.5	Other Boiler Plant Systems	7,480	0	7,385	0	14,864	9.4%	1,394	0%	0	15.0%	2,439	18,697	34
3.6	FO Supply Sys & Nat Gas	264	0	329	0	593	9.3%	55	0%	0	15.0%	97	745	1
3.7	Waste Treatment Equipment	4,493	0	2,561	0	7,055	9.7%	683	0%	0	20.0%	1,548	9,286	17
3.8	Misc. Power Plant Equipment	2,798	0	855	0	3,652	9.6%	351	0%	0	20.0%	801	4,803	9
	SUBTOTAL 3.	**$46,491**	**$0**	**$22,096**	**$0**	**$68,586**		**$6,259**		**$0**		**$12,252**	**$87,098**	**$158**
4	PC BOILER & ACCESSORIES													
4.1	PC Boiler	167,291	0	93,867	0	261,158	9.7%	25,296	0.0%	0	10.0%	28,645	315,099	573
4.2	SCR (w/4.1)	0	0	0	0	0	0%	0	0%	0	0.0%	0	0	0
4.3	Open	0	0	0	0	0	0%	0	0%	0	0.0%	0	0	0
4.4	Boiler BoP (w/ID Fans)	0	0	0	0	0	0%	0	0%	0	0.0%	0	0	0
4.5	Primary Air System	w/4.1	0	w/4.1	0	0	0%	0	0%	0	0.0%	0	0	0
4.6	Secondary Air System	w/4.1	0	w/4.1	0	0	0%	0	0%	0	0.0%	0	0	0
4.7	Major Component Rigging	0	w/4.1	w/4.1	0	0	0%	0	0%	0	0.0%	0	0	0
4.8	PC Foundations	0	w/14.1	w/14.1	0	0	0%	0	0%	0	0.0%	0	0	0
	SUBTOTAL 4.	**$167,291**	**$0**	**$93,867**	**$0**	**$261,158**		**$25,296**		**$0**		**$28,645**	**$315,099**	**$573**

Exhibit 3-60 Case 1B (50%) Capital Costs (continued)

		Department:	NETL Office of Systems Analysis and Planning										**Cost Base:**	Jun 2007
		Project:	CO2 Capture Sensitivity Systems Analysis										**Prepared:**	14-Jun-10
		Case:	Case 1B - Supercritical PC w/ 50% CO2 Capture											**x $1, 000**
		Plant Size:	549.99	MW, net			Capital Charge Factor	0.1773	Capacity Factor	0.85				
			Equipment	**Material**	**Labor**		**Bare**	**Eng'g CM H.O. &**		**Process Cont.**		**Project Cont.**		**TOTAL PLANT COST**	
Acct No.		**Item/Description**	**Cost**	**Cost**	**Direct**	**Indirect**	**Erected**	**%**	**Total**	**%**	**Total**	**%**	**Total**	**$**	**$/kW**
5A		FLUE GAS CLEANUP							*						
	5.1	Absorber Vessels & Accessories	71,665	0	15,428	0	87,093	9.5%	8,243	0%	0	10.0%	9,534	104,869	191
	5.2	Other FGD	3,743	0	4,241	0	7,984	9.6%	769	0%	0	10.0%	875	9,628	18
	5.3	Bag House & Accessories	18,048	0	11,453	0	29,501	9.6%	2,822	0%	0	10.0%	3,232	35,555	65
	5.4	Other Particulate Removal Materials	1,181	0	1,264	0	2,445	9.6%	235	0%	0	10.0%	268	2,948	5
	5.5	Gypsum Dewatering System	4,883	0	829	0	5,712	9.4%	540	0%	0	10.0%	625	6,877	13
	5.6	Mercury Removal System	0	0	0	0	0	0.0%	0	0%	0	0.0%	0	0	0
	5.7	Open	0	0	0	0	0	0.0%	0	0%	0	0.0%	0	0	0
	5.8	Open	0	0	0	0	0	0.0%	0	0%	0	0.0%	0	0	0
	5.9	Open	0	0	0	0	0	0.0%	0	0%	0	0.0%	0	0	0
		SUBTOTAL 5A.	**$99,519**	**$0**	**$33,216**	**$0**	**$132,734**		**$12,609**		**$0**		**$14,534**	**$159,878**	**$291**
5B		CO2 REMOVAL & COMPRESSION													
	5B.1	CO2 Removal System	120,357	0	36,445	0	156,802	9.5%	14,882	20%	31,360	20.0%	40,609	243,653	443
	5B.2	CO2 Compression & Drying	13,483	0	4,211	0	17,695	9.5%	1,680	0%	0	20.0%	3,875	23,249	42
	5B.3	CO2 Pipeline											0	0	0
	5B.4	CO2 Storage											0	0	0
	5B.5	CO2 Monitoring											0	0	0
		SUBTOTAL 5B.	**$133,841**	**$0**	**$40,656**	**$0**	**$174,497**		**$16,562**		**$31,360**		**$44,484**	**$266,902**	**$485**
6		COMBUSTION TURBINE/ACCESSORIES													
	6.1	Combustion Turbine Generator	0	0	0	0	0	10%	0	0%	0	0.0%	0	0	0
	6.2	Combustion Turbine Accessories	0	0	0	0	0	10%	0	0%	0	0.0%	0	0	0
	6.3	Compressed Air Piping	0	0	0	0	0	10%	0	0%	0	0.0%	0	0	0
	6.4	Combustion Turbine Foundations	0	0	0	0	0	10%	0	0%	0	0.0%	0	0	0
		SUBTOTAL 6.	**$0**	**$0**	**$0**	**$0**	**$0**		**$0**		**$0**		**$0**	**$0**	**$0**
7		HRSG, DUCTING & STACK													
	7.1	Flue Gas Recycle Heat Exchanger	N/A	0	N/A	0	0	0%	0	0%	0	0.0%	0	0	0
	7.2	SCR System	0	0	0	0	0	0%	0	0%	0	0.0%	0	0	0
	7.3	Ductwork	8,940	0	5,744	0	14,684	8.7%	1,282	0%	0	15.0%	2,395	18,361	33
	7.4	Stack	8,575	0	5,018	0	13,593	9.6%	1,299	0%	0	10.0%	1,489	16,381	30
	7.9	HRSG, Duct & Stack Foundations	0	998	1,134	0	2,132	9.3%	199	0%	0	20.0%	466	2,797	5
		SUBTOTAL 7.	**$17,515**	**$998**	**$11,896**	**$0**	**$30,409**		**$2,780**		**$0**		**$4,350**	**$37,540**	**$68**
8		STEAM TURBINE GENERATOR													
	8.1	Steam TG & Accessories	52,567	0	6,975	0	59,542	9.6%	5,701	0%	0	10.0%	6,524	71,767	130
	8.2	Turbine Plant Auxiliaries	354	0	758	0	1,112	9.7%	108	0%	0	10.0%	122	1,342	2
	8.3	Condenser & Auxiliaries	5,372	0	2,001	0	7,374	9.5%	701	0%	0	10.0%	807	8,882	16
	8.4	Steam Piping	16,894	0	8,330	0	25,224	8.3%	2,105	0%	0	15.0%	4,099	31,429	57
	8.9	TG Foundations	0	1,113	1,759	0	2,872	9.4%	270	0%	0	20.0%	628	3,770	7
		SUBTOTAL 8.	**$75,187**	**$1,113**	**$19,824**	**$0**	**$96,124**		**$8,885**		**$0**		**$12,182**	**$117,190**	**$213**
9		COOLING WATER SYSTEM													
	9.1	Cooling Towers	10,446	0	3,253	0	13,698	9.5%	1,300	0%	0	10.0%	1,500	16,499	30
	9.2	Circulating Water Pumps	1,758	0	135	0	1,893	8.6%	162	0%	0	10.0%	205	2,260	4
	9.3	Circ. Water System Auxiliaries	498	0	66	0	565	9.4%	53	0%	0	10.0%	62	680	1
	9.4	Circ. Water Piping	0	3,949	3,827	0	7,777	9.2%	716	0%	0	15.0%	1,274	9,767	18
	9.5	Make-up Water System	477	0	637	0	1,114	9.5%	106	0%	0	15.0%	183	1,403	3
	9.6	Component Cooling Water System	395	0	314	0	709	9.4%	66	0%	0	15.0%	116	891	2
	9.9	Circ. Water System Foundations	0	2,425	3,853	0	6,278	9.4%	591	0%	0	20.0%	1,374	8,243	15
		SUBTOTAL 9.	**$13,574**	**$6,374**	**$12,086**	**$0**	**$32,034**		**$2,995**		**$0**		**$4,714**	**$39,743**	**$72**

Exhibit 3-60 Case 1B (50%) Capital Costs (continued)

		Department:	NETL Office of Systems Analysis and Planning										**Cost Base:**	Jun 2007
		Project:	CO2 Capture Sensitivity Systems Analysis										**Prepared:**	14-Jun-10
		Case:	Case 1B - Supercritical PC w/ 50% CO2 Capture											**x $1, 000**
		Plant Size:	549.99	MW, net			Capital Charge Factor	0.1773	Capacity Factor	0.85				
			Equipment	**Material**	**Labor**		**Bare**	**Eng'g CM H.O. &**		**Process Cont.**		**Project Cont.**		**TOTAL PLANT COST**	
Acct No.	**Item/Description**		**Cost**	**Cost**	**Direct**	**Indirect**	**Erected**	**%**	**Total**	**%**	**Total**	**%**	**Total**	**$**	**$/kW**
10	ASH/SPENT SORBENT HANDLING SYS														
10.1	Ash Coolers		N/A	0	N/A	0	0	0%	0	0%	0	0.0%	0	0	0
10.2	Cyclone Ash Letdown		N/A	0	N/A	0	0	0%	0	0%	0	0.0%	0	0	0
10.3	HGCU Ash Letdown		N/A	0	N/A	0	0	0%	0	0%	0	0.0%	0	0	0
10.4	High Temperature Ash Piping		N/A	0	N/A	0	0	0%	0	0%	0	0.0%	0	0	0
10.5	Other Ash Recovery Equipment		N/A	0	N/A	0	0	0%	0	0%	0	0.0%	0	0	0
10.6	Ash Storage Silos		634	0	1,955	0	2,589	9.7%	252	0%	0	10.0%	284	3,126	6
10.7	Ash Transport & Feed Equipment		4,107	0	4,207	0	8,314	9.5%	786	0%	0	10.0%	910	10,010	18
10.8	Misc. Ash Handling Equipment		0	0	0	0	0	0.0%	0	0%	0	0.0%	0	0	0
10.9	Ash/Spent Sorbent Foundation		0	151	178	0	328	9.3%	31	0%	0	20.0%	72	431	1
	SUBTOTAL 10.		**$4,741**	**$151**	**$6,339**	**$0**	**$11,231**		**$1,069**		**$0**		**$1,266**	**$13,566**	**$25**
11	ACCESSORY ELECTRIC PLANT														
11.1	Generator Equipment		1,625	0	264	0	1,889	9.3%	175	0%	0	7.5%	155	2,219	4
11.2	Station Service Equipment		3,904	0	1,283	0	5,187	9.6%	496	0%	0	7.5%	426	6,109	11
11.3	Switchgear & Motor Control		4,488	0	763	0	5,251	9.3%	486	0%	0	10.0%	574	6,311	11
11.4	Conduit & Cable Tray		0	2,814	9,730	0	12,544	9.6%	1,200	0%	0	15.0%	2,062	15,806	29
11.5	Wire & Cable		0	5,310	10,250	0	15,560	8.4%	1,311	0%	0	15.0%	2,531	19,401	35
11.6	Protective Equipment		260	0	885	0	1,146	9.8%	112	0%	0	10.0%	126	1,383	3
11.7	Standby Equipment		1,294	0	30	0	1,323	9.5%	125	0%	0	10.0%	145	1,594	3
11.8	Main Power Transformers		7,399	0	125	0	7,524	7.6%	572	0%	0	10.0%	810	8,905	16
11.9	Electrical Foundations		0	317	777	0	1,093	9.5%	104	0%	0	20.0%	239	1,437	3
	SUBTOTAL 11.		**$18,971**	**$8,440**	**$24,105**	**$0**	**$51,517**		**$4,581**		**$0**		**$7,067**	**$63,164**	**$115**
12	INSTRUMENTATION & CONTROL														
12.1	PC Control Equipment		w/12.7	0	w/12.7	0	0	0%	0	0%	0	0.0%	0	0	0
12.2	Combustion Turbine Control		N/A	0	N/A	0	0	0%	0	0%	0	0.0%	0	0	0
12.3	Steam Turbine Control		w/8.1	0	w/8.1	0	0	0%	0	0%	0	0.0%	0	0	0
12.4	Other Major Component Control		0	0	0	0	0	0%	0	0%	0	0.0%	0	0	0
12.5	Signal Processing Equipment		W/12.7	0	w/12.7	0	0	0%	0	0%	0	0.0%	0	0	0
12.6	Control Boards, Panels & Racks		481	0	288	0	770	9.6%	74	0%	0	15.0%	127	970	2
12.7	Computer Accessories		4,860	0	849	0	5,710	9.5%	544	0%	0	10.0%	625	6,879	13
12.8	Instrument Wiring & Tubing		2,634	0	5,226	0	7,860	8.5%	670	0%	0	15.0%	1,279	9,809	18
12.9	Other I & C Equipment		1,373	0	3,117	0	4,490	9.7%	437	0%	0	10.0%	493	5,420	10
	SUBTOTAL 12.		**$9,349**	**$0**	**$9,480**	**$0**	**$18,830**		**$1,725**		**$0**		**$2,524**	**$23,078**	**$42**
13	IMPROVEMENTS TO SITE														
13.1	Site Preparation		0	53	1,067	0	1,120	9.9%	110	0%	0	20.0%	246	1,477	3
13.2	Site Improvements		0	1,771	2,200	0	3,971	9.8%	390	0%	0	20.0%	872	5,233	10
13.3	Site Facilities		3,174	0	3,130	0	6,304	9.8%	619	0%	0	20.0%	1,384	8,307	15
	SUBTOTAL 13.		**$3,174**	**$1,825**	**$6,396**	**$0**	**$11,395**		**$1,119**		**$0**		**$2,503**	**$15,016**	**$27**

Exhibit 3-60 Case 1B (50%) Capital Costs (continued)

Department:	NETL Office of Systems Analysis and Planning			**Cost Base:**	Jun 2007
Project:	CO2 Capture Sensitivity Systems Analysis			**Prepared:**	27-May-11
Case:	Case 1B - Supercritical PC w/ 50% CO2 Capture				**x $1, 000**
Plant Size:	549.99 MW, net	Capital Charge Factor 0.1773	Capacity Factor 0.85		

Acct No.	Item/Description	Equipment Cost	Material Cost	Labor Direct	Labor Indirect	Bare Erected	Eng'g CM H.O. & %	Eng'g CM H.O. & Total	Process Cont. %	Process Cont. Total	Project Cont. %	Project Cont. Total	TOTAL PLANT COST $	TOTAL PLANT COST $/kW
14	BUILDINGS & STRUCTURES													
14.1	Boiler Building	0	8,747	7,692	0	16,439	9.0%	1,476	0%	0	15.0%	2,687	20,603	37
14.2	Turbine Building	0	12,572	11,717	0	24,289	9.0%	2,187	0%	0	15.0%	3,971	30,448	55
14.3	Administration Building	0	629	665	0	1,294	9.1%	117	0%	0	15.0%	212	1,623	3
14.4	Circulation Water Pumphouse	0	116	92	0	208	8.9%	19	0%	0	15.0%	34	260	0
14.5	Water Treatment Buildings	0	641	584	0	1,225	9.0%	110	0%	0	15.0%	200	1,534	3
14.6	Machine Shop	0	421	283	0	703	8.9%	62	0%	0	15.0%	115	880	2
14.7	Warehouse	0	285	286	0	571	9.0%	52	0%	0	15.0%	93	716	1
14.8	Other Buildings & Structures	0	233	198	0	431	9.0%	39	0%	0	15.0%	70	540	1
14.9	Waste Treating Building & Str.	0	441	1,338	0	1,778	9.4%	168	0%	0	15.0%	292	2,238	4
	SUBTOTAL 14.	**$0**	**$24,083**	**$22,855**	**$0**	**$46,938**		**$4,229**		**$0**		**$7,675**	**$58,842**	**$107**
	Total Cost	**$619,709**	**$48,505**	**$316,606**	**$0**	**$984,820**		**$92,501**		**$31,360**		**$150,260**	**$1,258,942**	**$2,289**

Owner's Costs			
Preproduction Costs			
6 Months All Labor		$9,253	$17
1 Month Maintenance Materials		$1,231	$2
1 Month Non-fuel Consumables		$983	$2
1 Month Waste Disposal		$281	$1
25% of 1 Months Fuel Cost at 100% CF		$1,705	$3
2% of TPC		$25,179	$46
Total		$38,632	$70
Inventory Capital			
60 day supply of fuel and consumables at 100% CF		$15,606	$28
0.5% of TPC (spare parts)		$6,295	$11
Total		$21,900	$40
Initial Cost for Catalyst and Chemicals		$1,183	$2
Land		$900	$2
Other Owner's Costs		$188,841	$343
Financing Costs		$33,991	$62
Total Overnight Costs (TOC)		**$1,544,390**	**$2,808.0**
TASC Multiplier	(IOU, high risk, 35 year)	1.140	
Total As-Spent Cost (TASC)		**$1,760,604**	**$3,201**

Exhibit 3-61 Case 1B Initial and Annual O&M Expenses

INITIAL & ANNUAL O&M EXPENSES			
Case:	Case 1B - Supercritical PC w/ 50% CO2 Capture		
Plant Size (MWe):	549.99	**Heat Rate (Btu/kWh):**	10,379
Primary/Secondary Fuel:	Illinois #6 Bituminous Coal	**Fuel Cost ($/MM Btu):**	1.64
Design/Construction	5 years	**Book Life (yrs):**	30
TPC (Plant Cost) Year:	Jun 2007	**TPI Year:**	2015
Capacity Factor (%):	85	**CO_2 Captured (TPD):**	6977

OPERATING & MAINTENANCE LABOR

Operating Labor

Operating Labor Rate (base):	$34.65	$/hour
Operating Labor Burden:	30.00	% of base
Labor Overhead Charge:	25.00	% of labor

Operating Labor Requirements per Shift:	units/mod.	Total Plant
Skilled Operator	2.0	2.0
Operator	11.3	11.3
Foreman	1.0	1.0
Lab Tech's etc.	2.0	2.0
TOTAL Operating Jobs	16.3	16.3

	Annual Costs $	Annual Costs $/kW-net
Annual Operating Labor Cost (calc'd)	6,431,885	11.69
Maintenance Labor Cost (calc'd)	8,372,328	15.22
Administrative & Support Labor (calc'd)	3,701,053	6.73
Property Taxes & Insurance	$25,178,842	$45.781
TOTAL FIXED OPERATING COSTS	**$43,684,109**	**$79.427**

VARIABLE OPERATING COSTS

	$	$/kWh-net
Maintenance Material Costs (calc'd)	**$12,558,493**	**0.00307**

Consumables	Consumption Initial	Consumption /Day	Unit Cost	Initial Cost	$	$/kWh-net
Water (/1000 gallons)	0	5,401	1.08	$0	$1,809,702	0.00044
Chemicals						
MU & WT Chem. (lb)	0	26,144	0.17	$0	$1,378,908	0.00034
Limestone (ton)	0	594	21.63	$0	$3,986,773	0.00097
Carbon (Hg Removal) (lb)	0	0	1.05	$0	$0	0.00000
MEA Solvent (ton)	487	0.70	2249.89	$1,095,943	$488,964	0.00012
Caustic Soda, NaOH (ton)	34	3.44	433.68	$14,927	$463,114	0.00011
Sulfuric acid, H_2SO_4 (ton)	33	3.28	138.78	$4,558	$141,416	0.00003
Corrosion Inhibitor	0	0	0.00	$67,376	$3,254	0.00000
Activated C, MEA (lb)	0	825	1.05	$0	$268,831	0.00007
Ammonia, 28% soln (ton)	0	18	129.80	$0	$725,759	0.00018
Subtotal Chemicals				**$1,182,804**	**$7,457,020**	**0.00182**
Other						
Supplemental Fuel (MMBtu)	0	0	0.00	$0	$0	0.00000
SCR Catalyst Replacement	w/equip.	0.42	5,775.94	$0	$759,439	0.00019
Emission Penalties	0	0	0.00	$0	$0	0.00000
Subtotal Other				**$0**	**$759,439**	**0.00019**
Waste Disposal						
Spent Mercury Catalyst (lb)	0	0	0.31	$0	$0	0.00000
Flyash (ton)	0	456	16.23	$0	$2,293,612	0.00056
Bottom Ash (ton)	0	114	16.23	$0	$573,403	0.00014
Subtotal Solid Waste Disposal				**$0**	**$2,867,015**	**0.00070**
By-products & Emissions						
Gypsum (tons)	0	0	0.00	$0	$0	0.00000
Sulfur (tons)	0	0	0.00	$0	$0	0.00000
Subtotal By-Products				**$0**	**$0**	**0.00000**
TOTAL VARIABLE OPERATING COSTS					**$25,451,668**	**0.00621**
Coal FUEL (tons)	**176,154**	**5,872**	**38.19**	**$6,726,460**	**$69,562,807**	**0.01699**

Exhibit 3-62 Case 1C (70%) Capital Costs

Department:	NETL Office of Systems Analysis and Planning			**Cost Base:**	Jun 2007
Project:	CO2 Capture Sensitivity Systems Analysis			**Prepared:**	14-Jun-10
Case:	Case 1C - Supercritical PC w/ 70% CO2 Capture				**x $1, 000**
Plant Size:	550.04 MW, net	Capital Charge Factor 0.1773	Capacity Factor 0.85		

Acct No.	Item/Description	Equipment Cost	Material Cost	Labor Direct	Labor Indirect	Bare Erected	Eng'g CM H.O. & %	Eng'g CM H.O. & Total	Process Cont. %	Process Cont. Total	Project Cont. %	Project Cont. Total	TOTAL PLANT COST $	TOTAL PLANT COST $/kW
1	COAL HANDLING SYSTEM													
1.1	Coal Receive & Unload	3,828	0	1,748	0	5,576	8.9%	498	0%	0	15.0%	911	6,985	13
1.2	Coal Stackout & Reclaim	4,947	0	1,121	0	6,067	8.8%	531	0%	0	15.0%	990	7,588	14
1.3	Coal Conveyors & Yd Crus	4,599	0	1,109	0	5,708	8.8%	500	0%	0	15.0%	931	7,140	13
1.4	Other Coal Handling	1,203	0	257	0	1,460	8.7%	128	0%	0	15.0%	238	1,826	3
1.5	Sorbent Receive & Unload	157	0	47	0	205	8.8%	18	0%	0	15.0%	33	256	0
1.6	Sorbent Stackout & Reclaim	2,538	0	465	0	3,004	8.7%	262	0%	0	15.0%	490	3,755	7
1.7	Sorbent Conveyors	906	196	222	0	1,324	8.7%	115	0%	0	15.0%	216	1,654	3
1.8	Other Sorbent Handling	547	128	287	0	962	8.8%	85	0%	0	15.0%	157	1,204	2
1.9	Coal & Sorbent Hnd.Foundations	0	4,705	5,936	0	10,641	9.3%	995	0%	0	15.0%	1,745	13,381	24
	SUBTOTAL 1.	**$18,725**	**$5,030**	**$11,192**	**$0**	**$34,946**		**$3,131**		**$0**		**$5,712**	**$43,789**	**$80**
2	COAL PREP & FEED SYSTEMS													
2.1	Coal Crushing & Drying	2,210	0	431	0	2,641	8.7%	230	0%	0	15.0%	431	3,302	6
2.2	Prepared Coal Storage & Feed	5,659	0	1,235	0	6,895	8.7%	603	0%	0	15.0%	1,125	8,623	16
2.3	Slurry Prep & Feed	0	0	0	0	0	0.0%	0	0%	0	0.0%	0	0	0
2.4	Misc. Coal Prep & Feed	0	0	0	0	0	0.0%	0	0%	0	0.0%	0	0	0
2.5	Sorbent Prep Equipment	4,322	186	898	0	5,406	8.7%	471	0%	0	15.0%	881	6,758	12
2.6	Sorbent Storage & Feed	521	0	199	0	720	8.9%	64	0%	0	15.0%	118	902	2
2.7	Sorbent Injection System	0	0	0	0	0	0.0%	0	0%	0	0.0%	0	0	0
2.8	Booster Air Supply System	0	0	0	0	0	0.0%	0	0%	0	0.0%	0	0	0
2.9	Coal & Sorbent Feed Foundation	0	554	465	0	1,019	9.2%	94	0%	0	15.0%	167	1,280	2
	SUBTOTAL 2.	**$12,712**	**$740**	**$3,228**	**$0**	**$16,681**		**$1,462**		**$0**		**$2,721**	**$20,864**	**$38**
3	FEEDWATER & MISC. BOP SYSTEMS													
3.1	Feedwater System	20,561	0	6,642	0	27,203	8.8%	2,382	0%	0	15.0%	4,438	34,023	62
3.2	Water Makeup & Pretreating	5,674	0	1,826	0	7,501	9.4%	703	0%	0	20.0%	1,641	9,845	18
3.3	Other Feedwater Subsystems	6,295	0	2,660	0	8,955	8.9%	798	0%	0	15.0%	1,463	11,216	20
3.4	Service Water Systems	1,112	0	605	0	1,717	9.3%	159	0%	0	20.0%	375	2,252	4
3.5	Other Boiler Plant Systems	7,893	0	7,792	0	15,685	9.4%	1,471	0%	0	15.0%	2,573	19,730	36
3.6	FO Supply Sys & Nat Gas	268	0	335	0	604	9.3%	56	0%	0	15.0%	99	759	1
3.7	Waste Treatment Equipment	4,577	0	2,609	0	7,187	9.7%	696	0%	0	20.0%	1,577	9,460	17
3.8	Misc. Power Plant Equipment	2,848	0	870	0	3,718	9.6%	357	0%	0	20.0%	815	4,890	9
	SUBTOTAL 3.	**$49,229**	**$0**	**$23,341**	**$0**	**$72,570**		**$6,623**		**$0**		**$12,981**	**$92,174**	**$168**
4	PC BOILER & ACCESSORIES													
4.1	PC Boiler	175,837	0	98,662	0	274,499	9.7%	26,588	0.0%	0	10.0%	30,109	331,196	602
4.2	SCR (w/4.1)	0	0	0	0	0	0%	0	0%	0	0.0%	0	0	0
4.3	Open	0	0	0	0	0	0%	0	0%	0	0.0%	0	0	0
4.4	Boiler BoP (w/ID Fans)	0	0	0	0	0	0%	0	0%	0	0.0%	0	0	0
4.5	Primary Air System	w/4.1	0	w/4.1	0	0	0%	0	0%	0	0.0%	0	0	0
4.6	Secondary Air System	w/4.1	0	w/4.1	0	0	0%	0	0%	0	0.0%	0	0	0
4.7	Major Component Rigging	0	w/4.1	w/4.1	0	0	0%	0	0%	0	0.0%	0	0	0
4.8	PC Foundations	0	w/14.1	w/14.1	0	0	0%	0	0%	0	0.0%	0	0	0
	SUBTOTAL 4.	**$175,837**	**$0**	**$98,662**	**$0**	**$274,499**		**$26,588**		**$0**		**$30,109**	**$331,196**	**$602**

Exhibit 3-62 Case 1C (70%) Capital Costs (continued)

		Department:	NETL Office of Systems Analysis and Planning										**Cost Base:**	Jun 2007
		Project:	CO2 Capture Sensitivity Systems Analysis										**Prepared:**	14-Jun-10
		Case:	Case 1C - Supercritical PC w/ 70% CO2 Capture											**x $1, 000**
		Plant Size:	550.04	MW, net		Capital Charge Factor	0.1773		Capacity Factor	0.85				
			Equipment	**Material**	**Labor**		**Bare**	**Eng'g CM H.O. &**		**Process Cont.**		**Project Cont.**		**TOTAL PLANT COST**	
Acct No.		**Item/Description**	**Cost**	**Cost**	**Direct**	**Indirect**	**Erected**	**%**	**Total**	**%**	**Total**	**%**	**Total**	**$**	**$/kW**
5A		FLUE GAS CLEANUP							*						
	5.1	Absorber Vessels & Accessories	75,503	0	16,254	0	91,757	9.5%	8,684	0%	0	10.0%	10,044	110,485	201
	5.2	Other FGD	3,943	0	4,468	0	8,411	9.6%	810	0%	0	10.0%	922	10,144	18
	5.3	Bag House & Accessories	19,088	0	12,114	0	31,201	9.6%	2,984	0%	0	10.0%	3,419	37,604	68
	5.4	Other Particulate Removal Materials	1,248	0	1,336	0	2,584	9.6%	249	0%	0	10.0%	283	3,116	6
	5.5	Gypsum Dewatering System	5,096	0	866	0	5,961	9.4%	563	0%	0	10.0%	652	7,177	13
	5.6	Mercury Removal System	0	0	0	0	0	0.0%	0	0%	0	0.0%	0	0	0
	5.7	Open	0	0	0	0	0	0.0%	0	0%	0	0.0%	0	0	0
	5.8	Open	0	0	0	0	0	0.0%	0	0%	0	0.0%	0	0	0
	5.9	Open	0	0	0	0	0	0.0%	0	0%	0	0.0%	0	0	0
		SUBTOTAL 5A.	**$104,877**	**$0**	**$35,037**	**$0**	**$139,914**		**$13,291**		**$0**		**$15,321**	**$168,526**	**$306**
5B		CO2 REMOVAL & COMPRESSION													
	5B.1	CO2 Removal System	152,043	0	46,040	0	198,083	9.5%	18,800	20%	39,617	20.0%	51,300	307,799	560
	5B.2	CO2 Compression & Drying	16,816	0	5,252	0	22,068	9.5%	2,095	0%	0	20.0%	4,833	28,996	53
	5B.3	CO2 Pipeline											0	0	0
	5B.4	CO2 Storage											0	0	0
	5B.5	CO2 Monitoring											0	0	0
		SUBTOTAL 5B.	**$168,859**	**$0**	**$51,292**	**$0**	**$220,151**		**$20,895**		**$39,617**		**$56,132**	**$336,794**	**$612**
6		COMBUSTION TURBINE/ACCESSORIES													
	6.1	Combustion Turbine Generator	0	0	0	0	0	10%	0	0%	0	0.0%	0	0	0
	6.2	Combustion Turbine Accessories	0	0	0	0	0	10%	0	0%	0	0.0%	0	0	0
	6.3	Compressed Air Piping	0	0	0	0	0	10%	0	0%	0	0.0%	0	0	0
	6.4	Combustion Turbine Foundations	0	0	0	0	0	10%	0	0%	0	0.0%	0	0	0
		SUBTOTAL 6.	**$0**	**$0**	**$0**	**$0**	**$0**		**$0**		**$0**		**$0**	**$0**	**$0**
7		HRSG, DUCTING & STACK													
	7.1	Flue Gas Recycle Heat Exchanger	N/A	0	N/A	0	0	0%	0	0%	0	0.0%	0	0	0
	7.2	SCR System	0	0	0	0	0	0%	0	0%	0	0.0%	0	0	0
	7.3	Ductwork	9,187	0	5,903	0	15,090	8.7%	1,318	0%	0	15.0%	2,461	18,870	34
	7.4	Stack	8,521	0	4,986	0	13,507	9.6%	1,291	0%	0	10.0%	1,480	16,278	30
	7.9	HRSG, Duct & Stack Foundations	0	1,008	1,145	0	2,153	9.3%	201	0%	0	20.0%	471	2,825	5
		SUBTOTAL 7.	**$17,708**	**$1,008**	**$12,034**	**$0**	**$30,751**		**$2,809**		**$0**		**$4,412**	**$37,972**	**$69**
8		STEAM TURBINE GENERATOR													
	8.1	Steam TG & Accessories	53,728	0	7,129	0	60,857	9.6%	5,827	0%	0	10.0%	6,668	73,353	133
	8.2	Turbine Plant Auxiliaries	362	0	775	0	1,137	9.7%	110	0%	0	10.0%	125	1,372	2
	8.3	Condenser & Auxiliaries	5,127	0	1,910	0	7,037	9.5%	669	0%	0	10.0%	771	8,477	15
	8.4	Steam Piping	17,763	0	8,758	0	26,521	8.3%	2,213	0%	0	15.0%	4,310	33,045	60
	8.9	TG Foundations	0	1,137	1,796	0	2,933	9.4%	276	0%	0	20.0%	642	3,851	7
		SUBTOTAL 8.	**$76,980**	**$1,137**	**$20,369**	**$0**	**$98,486**		**$9,095**		**$0**		**$12,516**	**$120,098**	**$218**
9		COOLING WATER SYSTEM													
	9.1	Cooling Towers	12,077	0	3,761	0	15,838	9.5%	1,504	0%	0	10.0%	1,734	19,076	35
	9.2	Circulating Water Pumps	2,101	0	161	0	2,263	8.6%	193	0%	0	10.0%	246	2,702	5
	9.3	Circ. Water System Auxiliaries	570	0	76	0	646	9.4%	61	0%	0	10.0%	71	778	1
	9.4	Circ. Water Piping	0	4,519	4,380	0	8,899	9.2%	820	0%	0	15.0%	1,458	11,176	20
	9.5	Make-up Water System	537	0	718	0	1,255	9.5%	119	0%	0	15.0%	206	1,580	3
	9.6	Component Cooling Water System	452	0	359	0	811	9.4%	76	0%	0	15.0%	133	1,020	2
	9.9	Circ. Water System Foundations	0	2,746	4,364	0	7,110	9.4%	669	0%	0	20.0%	1,556	9,335	17
		SUBTOTAL 9.	**$15,738**	**$7,266**	**$13,818**	**$0**	**$36,821**		**$3,442**		**$0**		**$5,403**	**$45,666**	**$83**

Exhibit 3-62 Case 1C (70%) Capital Costs (continued)

Department:	NETL Office of Systems Analysis and Planning			**Cost Base:**	Jun 2007
Project:	CO2 Capture Sensitivity Systems Analysis			**Prepared:**	14-Jun-10
Case:	Case 1C - Supercritical PC w/ 70% CO2 Capture				**x $1, 000**
Plant Size:	550.04 MW, net	Capital Charge Factor 0.1773	Capacity Factor 0.85		

Acct No.	Item/Description	Equipment Cost	Material Cost	Labor Direct	Labor Indirect	Bare Erected	Eng'g CM H.O. & %	Eng'g CM H.O. & Total	Process Cont. %	Process Cont. Total	Project Cont. %	Project Cont. Total	TOTAL PLANT COST $	TOTAL PLANT COST $/kW
10	ASH/SPENT SORBENT HANDLING SYS													
10.1	Ash Coolers	N/A	0	N/A	0	0	0%	0	0%	0	0.0%	0	0	0
10.2	Cyclone Ash Letdown	N/A	0	N/A	0	0	0%	0	0%	0	0.0%	0	0	0
10.3	HGCU Ash Letdown	N/A	0	N/A	0	0	0%	0	0%	0	0.0%	0	0	0
10.4	High Temperature Ash Piping	N/A	0	N/A	0	0	0%	0	0%	0	0.0%	0	0	0
10.5	Other Ash Recovery Equipment	N/A	0	N/A	0	0	0%	0	0%	0	0.0%	0	0	0
10.6	Ash Storage Silos	661	0	2,035	0	2,696	9.7%	263	0%	0	10.0%	296	3,254	6
10.7	Ash Transport & Feed Equipment	4,275	0	4,380	0	8,655	9.5%	819	0%	0	10.0%	947	10,421	19
10.8	Misc. Ash Handling Equipment	0	0	0	0	0	0.0%	0	0%	0	0.0%	0	0	0
10.9	Ash/Spent Sorbent Foundation	0	157	185	0	342	9.3%	32	0%	0	20.0%	75	448	1
	SUBTOTAL 10.	**$4,936**	**$157**	**$6,599**	**$0**	**$11,692**		**$1,113**		**$0**		**$1,318**	**$14,123**	**$26**
11	ACCESSORY ELECTRIC PLANT													
11.1	Generator Equipment	1,653	0	268	0	1,922	9.3%	178	0%	0	7.5%	157	2,257	4
11.2	Station Service Equipment	4,353	0	1,430	0	5,784	9.6%	553	0%	0	7.5%	475	6,812	12
11.3	Switchgear & Motor Control	5,005	0	851	0	5,856	9.3%	542	0%	0	10.0%	640	7,038	13
11.4	Conduit & Cable Tray	0	3,138	10,850	0	13,988	9.6%	1,339	0%	0	15.0%	2,299	17,626	32
11.5	Wire & Cable	0	5,921	11,430	0	17,351	8.4%	1,462	0%	0	15.0%	2,822	21,635	39
11.6	Protective Equipment	260	0	885	0	1,146	9.8%	112	0%	0	10.0%	126	1,383	3
11.7	Standby Equipment	1,312	0	30	0	1,342	9.5%	127	0%	0	10.0%	147	1,616	3
11.8	Main Power Transformers	7,541	0	127	0	7,668	7.6%	583	0%	0	10.0%	825	9,076	17
11.9	Electrical Foundations	0	324	793	0	1,117	9.5%	106	0%	0	20.0%	245	1,468	3
	SUBTOTAL 11.	**$20,125**	**$9,383**	**$26,665**	**$0**	**$56,174**		**$5,002**		**$0**		**$7,736**	**$68,911**	**$125**
12	INSTRUMENTATION & CONTROL													
12.1	PC Control Equipment	w/12.7	0	w/12.7	0	0	0%	0	0%	0	0.0%	0	0	0
12.2	Combustion Turbine Control	N/A	0	N/A	0	0	0%	0	0%	0	0.0%	0	0	0
12.3	Steam Turbine Control	w/8.1	0	w/8.1	0	0	0%	0	0%	0	0.0%	0	0	0
12.4	Other Major Component Control	0	0	0	0	0	0%	0	0%	0	0.0%	0	0	0
12.5	Signal Processing Equipment	W/12.7	0	w/12.7	0	0	0%	0	0%	0	0.0%	0	0	0
12.6	Control Boards, Panels & Racks	497	0	298	0	795	9.6%	76	0%	0	15.0%	131	1,002	2
12.7	Computer Accessories	5,019	0	877	0	5,897	9.5%	562	0%	0	10.0%	646	7,104	13
12.8	Instrument Wiring & Tubing	2,721	0	5,397	0	8,118	8.5%	692	0%	0	15.0%	1,321	10,131	18
12.9	Other I & C Equipment	1,418	0	3,219	0	4,637	9.7%	452	0%	0	10.0%	509	5,598	10
	SUBTOTAL 12.	**$9,656**	**$0**	**$9,791**	**$0**	**$19,447**		**$1,781**		**$0**		**$2,607**	**$23,835**	**$43**
13	IMPROVEMENTS TO SITE													
13.1	Site Preparation	0	54	1,086	0	1,140	9.9%	112	0%	0	20.0%	251	1,503	3
13.2	Site Improvements	0	1,803	2,239	0	4,042	9.8%	397	0%	0	20.0%	888	5,326	10
13.3	Site Facilities	3,230	0	3,186	0	6,416	9.8%	630	0%	0	20.0%	1,409	8,455	15
	SUBTOTAL 13.	**$3,230**	**$1,857**	**$6,510**	**$0**	**$11,598**		**$1,139**		**$0**		**$2,547**	**$15,284**	**$28**

Exhibit 3-62 Case 1C (70%) Capital Costs (continued)

Department:	NETL Office of Systems Analysis and Planning			**Cost Base:**	Jun 2007
Project:	CO2 Capture Sensitivity Systems Analysis			**Prepared:**	27-May-11
Case:	Case 1C - Supercritical PC w/ 70% CO2 Capture				**x $1, 000**
Plant Size:	550.04 MW, net	Capital Charge Factor 0.1773	Capacity Factor 0.85		

Acct No.	Item/Description	Equipment Cost	Material Cost	Labor Direct	Labor Indirect	Bare Erected	Eng'g CM H.O. & %	Eng'g CM H.O. & Total	Process Cont. %	Process Cont. Total	Project Cont. %	Project Cont. Total	TOTAL PLANT COST $	TOTAL PLANT COST $/kW
14	BUILDINGS & STRUCTURES													
14.1	Boiler Building	0	8,786	7,726	0	16,512	9.0%	1,483	0%	0	15.0%	2,699	20,694	38
14.2	Turbine Building	0	12,661	11,800	0	24,462	9.0%	2,203	0%	0	15.0%	4,000	30,664	56
14.3	Administration Building	0	634	671	0	1,305	9.1%	118	0%	0	15.0%	214	1,637	3
14.4	Circulation Water Pumphouse	0	131	104	0	235	8.9%	21	0%	0	15.0%	38	295	1
14.5	Water Treatment Buildings	0	730	666	0	1,396	9.0%	125	0%	0	15.0%	228	1,749	3
14.6	Machine Shop	0	424	285	0	709	8.9%	63	0%	0	15.0%	116	888	2
14.7	Warehouse	0	288	288	0	576	9.0%	52	0%	0	15.0%	94	722	1
14.8	Other Buildings & Structures	0	235	200	0	435	9.0%	39	0%	0	15.0%	71	545	1
14.9	Waste Treating Building & Str.	0	447	1,356	0	1,803	9.4%	170	0%	0	15.0%	296	2,270	4
	SUBTOTAL 14.	**$0**	**$24,336**	**$23,097**	**$0**	**$47,433**		**$4,274**		**$0**		**$7,756**	**$59,463**	**$108**
	Total Cost	**$678,613**	**$50,913**	**$341,637**	**$0**	**$1,071,164**		**$100,645**		**$39,617**		**$167,271**	**$1,378,696**	**$2,507**

Owner's Costs		
Preproduction Costs		
6 Months All Labor	$9,711	$18
1 Month Maintenance Materials	$1,339	$2
1 Month Non-fuel Consumables	$1,150	$2
1 Month Waste Disposal	$302	$1
25% of 1 Months Fuel Cost at 100% CF	$1,832	$3
2% of TPC	$27,574	$50
Total	$41,909	$76
Inventory Capital		
60 day supply of fuel and consumables at 100% CF	$16,956	$31
0.5% of TPC (spare parts)	$6,893	$13
Total	$23,850	$43
Initial Cost for Catalyst and Chemicals	$1,770	$3
Land	$900	$2
Other Owner's Costs	$206,804	$376
Financing Costs	$37,225	$68
Total Overnight Costs (TOC)	**$1,691,155**	**$3,074.6**
TASC Multiplier (IOU, high risk, 35 year)	1.140	
Total As-Spent Cost (TASC)	**$1,927,917**	**$3,505**

Exhibit 3-63 Case 1C Initial and Annual O&M Expenses

INITIAL & ANNUAL O&M EXPENSES			
Case:	Case 1C - Supercritical PC w/ 70% CO2 Capture		
Plant Size (MWe):	550.04	**Heat Rate (Btu/kWh):**	11,151
Primary/Secondary Fuel:	Illinois #6 Bituminous Coal	**Fuel Cost ($/MM Btu):**	1.64
Design/Construction	5 years	**Book Life (yrs):**	30
TPC (Plant Cost) Year:	Jun 2007	**TPI Year:**	2015
Capacity Factor (%):	85	**CO_2 Captured (TPD):**	10443

OPERATING & MAINTENANCE LABOR

Operating Labor

Operating Labor Rate (base):	$34.65	$/hour
Operating Labor Burden:	30.00	% of base
Labor Overhead Charge:	25.00	% of labor

Operating Labor Requirements per Shift:	units/mod.	Total Plant
Skilled Operator	2.0	2.0
Operator	11.3	11.3
Foreman	1.0	1.0
Lab Tech's etc.	2.0	2.0
TOTAL Operating Jobs	16.3	16.3

	Annual Costs $	Annual Costs $/kW-net
Annual Operating Labor Cost (calc'd)	6,431,885	11.69
Maintenance Labor Cost (calc'd)	9,106,367	16.56
Administrative & Support Labor (calc'd)	3,884,563	7.06
Property Taxes & Insurance	$27,573,930	$50.131
TOTAL FIXED OPERATING COSTS	**$46,996,745**	**$85.442**

VARIABLE OPERATING COSTS

	$	$/kWh-net
Maintenance Material Costs (calc'd)	**$13,659,550**	**0.00334**

Consumables	Consumption Initial	Consumption /Day	Unit Cost	Initial Cost	$	$/kWh-net
Water (/1000 gallons)	0	6,584	1.08	$0	$2,206,227	0.00054
Chemicals						
MU & WT Chem. (lb)	0	31,873	0.17	$0	$1,681,041	0.00041
Limestone (ton)	0	635	21.63	$0	$4,262,785	0.00104
Carbon (Hg Removal) (lb)	0	0	1.05	$0	$0	0.00000
MEA Solvent (ton)	729	1.05	2249.89	$1,640,437	$731,895	0.00018
Caustic Soda, NaOH (ton)	52	5.15	433.68	$22,343	$693,202	0.00017
Sulfuric acid, H_2SO_4 (ton)	49	4.92	138.78	$6,823	$211,676	0.00005
Corrosion Inhibitor	0	0	0.00	$100,851	$4,871	0.00000
Activated C, MEA (lb)	0	1,235	1.05	$0	$402,393	0.00010
Ammonia, 28% soln (ton)	0	19	129.80	$0	$779,819	0.00019
Subtotal Chemicals				**$1,770,454**	**$8,767,682**	**0.00214**
Other						
Supplemental Fuel (MMBtu)	0	0	0.00	$0	$0	0.00000
SCR Catalyst Replacement	w/equip.	0.42	5,775.94	$0	$759,439	0.00019
Emission Penalties	0	0	0.00	$0	$0	0.00000
Subtotal Other				**$0**	**$759,439**	**0.00019**
Waste Disposal						
Spent Mercury Catalyst (lb)	0	0	0.31	$0	$0	0.00000
Flyash (ton)	0	489	16.23	$0	$2,464,457	0.00060
Bottom Ash (ton)	0	122	16.23	$0	$616,114	0.00015
Subtotal Solid Waste Disposal				**$0**	**$3,080,571**	**0.00075**
By-products & Emissions						
Gypsum (tons)	0	0	0.00	$0	$0	0.00000
Sulfur (tons)	0	0	0.00	$0	$0	0.00000
Subtotal By-Products				**$0**	**$0**	**0.00000**
TOTAL VARIABLE OPERATING COSTS					**$28,473,469**	**0.00695**
Coal FUEL (tons)	**189,275**	**6,309**	**38.19**	**$7,227,497**	**$74,744,361**	**0.01825**

Exhibit 3-64 Case 1D (85%) Capital Costs

Department:	NETL Office of Systems Analysis and Planning			**Cost Base:**	Jun 2007
Project:	CO2 Capture Sensitivity Systems Analysis			**Prepared:**	14-Jun-10
Case:	Case 1D - Supercritical PC w/ 85% CO2 Capture				**x $1, 000**
Plant Size:	550.05 MW, net	Capital Charge Factor 0.1773	Capacity Factor 0.85		

Acct No.	Item/Description	Equipment Cost	Material Cost	Labor Direct	Labor Indirect	Bare Erected	Eng'g CM H.O. & %	Eng'g CM H.O. & Total	Process Cont. %	Process Cont. Total	Project Cont. %	Project Cont. Total	TOTAL PLANT COST $	TOTAL PLANT COST $/kW
1	COAL HANDLING SYSTEM													
1.1	Coal Receive & Unload	3,968	0	1,813	0	5,781	8.9%	516	0%	0	15.0%	945	7,241	13
1.2	Coal Stackout & Reclaim	5,128	0	1,162	0	6,290	8.8%	551	0%	0	15.0%	1,026	7,867	14
1.3	Coal Conveyors & Yd Crus	4,768	0	1,150	0	5,918	8.8%	519	0%	0	15.0%	965	7,402	13
1.4	Other Coal Handling	1,247	0	266	0	1,513	8.7%	132	0%	0	15.0%	247	1,893	3
1.5	Sorbent Receive & Unload	164	0	49	0	213	8.8%	19	0%	0	15.0%	35	266	0
1.6	Sorbent Stackout & Reclaim	2,642	0	484	0	3,126	8.7%	272	0%	0	15.0%	510	3,908	7
1.7	Sorbent Conveyors	943	204	231	0	1,378	8.7%	119	0%	0	15.0%	225	1,721	3
1.8	Other Sorbent Handling	569	133	299	0	1,001	8.8%	89	0%	0	15.0%	163	1,253	2
1.9	Coal & Sorbent Hnd.Foundations	0	4,880	6,156	0	11,035	9.3%	1,032	0%	0	15.0%	1,810	13,877	25
	SUBTOTAL 1.	**$19,429**	**$5,217**	**$11,609**	**$0**	**$36,255**		**$3,248**		**$0**		**$5,925**	**$45,429**	**$83**
2	COAL PREP & FEED SYSTEMS													
2.1	Coal Crushing & Drying	2,297	0	448	0	2,745	8.7%	239	0%	0	15.0%	448	3,432	6
2.2	Prepared Coal Storage & Feed	5,881	0	1,284	0	7,165	8.7%	627	0%	0	15.0%	1,169	8,960	16
2.3	Slurry Prep & Feed	0	0	0	0	0	0.0%	0	0%	0	0.0%	0	0	0
2.4	Misc. Coal Prep & Feed	0	0	0	0	0	0.0%	0	0%	0	0.0%	0	0	0
2.5	Sorbent Prep Equipment	4,500	194	935	0	5,629	8.7%	490	0%	0	15.0%	918	7,037	13
2.6	Sorbent Storage & Feed	542	0	208	0	750	8.9%	67	0%	0	15.0%	122	939	2
2.7	Sorbent Injection System	0	0	0	0	0	0.0%	0	0%	0	0.0%	0	0	0
2.8	Booster Air Supply System	0	0	0	0	0	0.0%	0	0%	0	0.0%	0	0	0
2.9	Coal & Sorbent Feed Foundation	0	575	483	0	1,058	9.2%	97	0%	0	15.0%	173	1,329	2
	SUBTOTAL 2.	**$13,221**	**$769**	**$3,356**	**$0**	**$17,346**		**$1,520**		**$0**		**$2,830**	**$21,697**	**$39**
3	FEEDWATER & MISC. BOP SYSTEMS													
3.1	Feedwater System	21,402	0	6,913	0	28,316	8.8%	2,479	0%	0	15.0%	4,619	35,414	64
3.2	Water Makeup & Pretreating	6,289	0	2,024	0	8,313	9.4%	779	0%	0	20.0%	1,818	10,911	20
3.3	Other Feedwater Subsystems	6,552	0	2,769	0	9,321	8.9%	831	0%	0	15.0%	1,523	11,675	21
3.4	Service Water Systems	1,233	0	671	0	1,904	9.3%	177	0%	0	20.0%	416	2,496	5
3.5	Other Boiler Plant Systems	8,244	0	8,139	0	16,383	9.4%	1,537	0%	0	15.0%	2,688	20,608	37
3.6	FO Supply Sys & Nat Gas	272	0	340	0	612	9.3%	57	0%	0	15.0%	100	770	1
3.7	Waste Treatment Equipment	4,656	0	2,654	0	7,311	9.7%	708	0%	0	20.0%	1,604	9,623	17
3.8	Misc. Power Plant Equipment	2,890	0	883	0	3,773	9.6%	362	0%	0	20.0%	827	4,962	9
	SUBTOTAL 3.	**$51,539**	**$0**	**$24,394**	**$0**	**$75,933**		**$6,930**		**$0**		**$13,596**	**$96,459**	**$175**
4	PC BOILER & ACCESSORIES													
4.1	PC Boiler	183,083	0	102,728	0	285,811	9.7%	27,684	0.0%	0	10.0%	31,349	344,844	627
4.2	SCR (w/4.1)	0	0	0	0	0	0%	0	0%	0	0.0%	0	0	0
4.3	Open	0	0	0	0	0	0%	0	0%	0	0.0%	0	0	0
4.4	Boiler BoP (w/ID Fans)	0	0	0	0	0	0%	0	0%	0	0.0%	0	0	0
4.5	Primary Air System	w/4.1	0	w/4.1	0	0	0%	0	0%	0	0.0%	0	0	0
4.6	Secondary Air System	w/4.1	0	w/4.1	0	0	0%	0	0%	0	0.0%	0	0	0
4.7	Major Component Rigging	0	w/4.1	w/4.1	0	0	0%	0	0%	0	0.0%	0	0	0
4.8	PC Foundations	0	w/14.1	w/14.1	0	0	0%	0	0%	0	0.0%	0	0	0
	SUBTOTAL 4.	**$183,083**	**$0**	**$102,728**	**$0**	**$285,811**		**$27,684**		**$0**		**$31,349**	**$344,844**	**$627**

Exhibit 3-64 Case 1D (85%) Capital Costs (continued)

		Department:	NETL Office of Systems Analysis and Planning										**Cost Base:**	Jun 2007
		Project:	CO2 Capture Sensitivity Systems Analysis										**Prepared:**	14-Jun-10
		Case:	Case 1D - Supercritical PC w/ 85% CO2 Capture											**x $1, 000**
		Plant Size:	550.05	MW, net			Capital Charge Factor	0.1773	Capacity Factor	0.85				
			Equipment	**Material**	**Labor**		**Bare**	**Eng'g CM H.O. &**		**Process Cont.**		**Project Cont.**		**TOTAL PLANT COST**	
Acct No.		**Item/Description**	**Cost**	**Cost**	**Direct**	**Indirect**	**Erected**	**%**	**Total**	**%**	**Total**	**%**	**Total**	**$**	**$/kW**
5A		FLUE GAS CLEANUP							*						
	5.1	Absorber Vessels & Accessories	78,763	0	16,956	0	95,719	9.5%	9,059	0%	0	10.0%	10,478	115,256	210
	5.2	Other FGD	4,113	0	4,661	0	8,774	9.6%	845	0%	0	10.0%	962	10,582	19
	5.3	Bag House & Accessories	19,975	0	12,676	0	32,651	9.6%	3,123	0%	0	10.0%	3,577	39,351	72
	5.4	Other Particulate Removal Materials	1,305	0	1,397	0	2,702	9.6%	260	0%	0	10.0%	296	3,259	6
	5.5	Gypsum Dewatering System	5,292	0	899	0	6,191	9.4%	585	0%	0	10.0%	678	7,453	14
	5.6	Mercury Removal System	0	0	0	0	0	0.0%	0	0%	0	0.0%	0	0	0
	5.7	Open	0	0	0	0	0	0.0%	0	0%	0	0.0%	0	0	0
	5.8	Open	0	0	0	0	0	0.0%	0	0%	0	0.0%	0	0	0
	5.9	Open	0	0	0	0	0	0.0%	0	0%	0	0.0%	0	0	0
		SUBTOTAL 5A.	**$109,448**	**$0**	**$36,589**	**$0**	**$146,037**		**$13,873**		**$0**		**$15,991**	**$175,901**	**$320**
5B		CO2 REMOVAL & COMPRESSION													
	5B.1	CO2 Removal System	195,757	0	59,277	0	255,033	9.5%	24,205	20%	51,007	20.0%	66,049	396,294	720
	5B.2	CO2 Compression & Drying	26,380	0	8,239	0	34,619	9.5%	3,287	0%	0	20.0%	7,581	45,487	83
	5B.3	CO2 Pipeline											0	0	0
	5B.4	CO2 Storage											0	0	0
	5B.5	CO2 Monitoring											0	0	0
		SUBTOTAL 5B.	**$222,137**	**$0**	**$67,516**	**$0**	**$289,653**		**$27,491**		**$51,007**		**$73,630**	**$441,781**	**$803**
6		COMBUSTION TURBINE/ACCESSORIES													
	6.1	Combustion Turbine Generator	0	0	0	0	0	10%	0	0%	0	0.0%	0	0	0
	6.2	Combustion Turbine Accessories	0	0	0	0	0	10%	0	0%	0	0.0%	0	0	0
	6.3	Compressed Air Piping	0	0	0	0	0	10%	0	0%	0	0.0%	0	0	0
	6.4	Combustion Turbine Foundations	0	0	0	0	0	10%	0	0%	0	0.0%	0	0	0
		SUBTOTAL 6.	**$0**	**$0**	**$0**	**$0**	**$0**		**$0**		**$0**		**$0**	**$0**	**$0**
7		HRSG, DUCTING & STACK													
	7.1	Flue Gas Recycle Heat Exchanger	N/A	0	N/A	0	0	0%	0	0%	0	0.0%	0	0	0
	7.2	SCR System	0	0	0	0	0	0%	0	0%	0	0.0%	0	0	0
	7.3	Ductwork	9,393	0	6,035	0	15,428	8.7%	1,347	0%	0	15.0%	2,516	19,292	35
	7.4	Stack	8,465	0	4,953	0	13,418	9.6%	1,282	0%	0	10.0%	1,470	16,171	29
	7.9	HRSG, Duct & Stack Foundations	0	1,016	1,154	0	2,170	9.3%	202	0%	0	20.0%	475	2,847	5
		SUBTOTAL 7.	**$17,858**	**$1,016**	**$12,143**	**$0**	**$31,017**		**$2,832**		**$0**		**$4,461**	**$38,310**	**$70**
8		STEAM TURBINE GENERATOR													
	8.1	Steam TG & Accessories	54,723	0	7,262	0	61,984	9.6%	5,935	0%	0	10.0%	6,792	74,711	136
	8.2	Turbine Plant Auxiliaries	369	0	789	0	1,158	9.7%	112	0%	0	10.0%	127	1,397	3
	8.3	Condenser & Auxiliaries	4,913	0	1,830	0	6,743	9.5%	641	0%	0	10.0%	738	8,122	15
	8.4	Steam Piping	18,500	0	9,122	0	27,622	8.3%	2,305	0%	0	15.0%	4,489	34,416	63
	8.9	TG Foundations	0	1,158	1,829	0	2,986	9.4%	281	0%	0	20.0%	653	3,921	7
		SUBTOTAL 8.	**$78,504**	**$1,158**	**$20,831**	**$0**	**$100,493**		**$9,274**		**$0**		**$12,800**	**$122,567**	**$223**
9		COOLING WATER SYSTEM													
	9.1	Cooling Towers	13,419	0	4,179	0	17,598	9.5%	1,671	0%	0	10.0%	1,927	21,196	39
	9.2	Circulating Water Pumps	2,392	0	183	0	2,575	8.6%	220	0%	0	10.0%	280	3,075	6
	9.3	Circ. Water System Auxiliaries	629	0	84	0	712	9.4%	67	0%	0	10.0%	78	858	2
	9.4	Circ. Water Piping	0	4,984	4,830	0	9,813	9.2%	904	0%	0	15.0%	1,608	12,325	22
	9.5	Make-up Water System	586	0	783	0	1,369	9.5%	130	0%	0	15.0%	225	1,723	3
	9.6	Component Cooling Water System	498	0	396	0	894	9.4%	84	0%	0	15.0%	147	1,125	2
	9.9	Circ. Water System Foundations	0	3,006	4,776	0	7,782	9.4%	732	0%	0	20.0%	1,703	10,217	19
		SUBTOTAL 9.	**$17,524**	**$7,990**	**$15,231**	**$0**	**$40,744**		**$3,808**		**$0**		**$5,966**	**$50,518**	**$92**

Exhibit 3-64 Case 1D (85%) Capital Costs (continued)

Department:	NETL Office of Systems Analysis and Planning			**Cost Base:**	Jun 2007
Project:	CO2 Capture Sensitivity Systems Analysis			**Prepared:**	14-Jun-10
Case:	Case 1D - Supercritical PC w/ 85% CO2 Capture				**x $1, 000**
Plant Size:	550.05 MW, net	Capital Charge Factor 0.1773	Capacity Factor 0.85		

Acct No.	Item/Description	Equipment Cost	Material Cost	Labor Direct	Labor Indirect	Bare Erected	Eng'g CM H.O. & %	Eng'g CM H.O. & Total	Process Cont. %	Process Cont. Total	Project Cont. %	Project Cont. Total	TOTAL PLANT COST $	TOTAL PLANT COST $/kW
10	ASH/SPENT SORBENT HANDLING SYS													
10.1	Ash Coolers	N/A	0	N/A	0	0	0%	0	0%	0	0.0%	0	0	0
10.2	Cyclone Ash Letdown	N/A	0	N/A	0	0	0%	0	0%	0	0.0%	0	0	0
10.3	HGCU Ash Letdown	N/A	0	N/A	0	0	0%	0	0%	0	0.0%	0	0	0
10.4	High Temperature Ash Piping	N/A	0	N/A	0	0	0%	0	0%	0	0.0%	0	0	0
10.5	Other Ash Recovery Equipment	N/A	0	N/A	0	0	0%	0	0%	0	0.0%	0	0	0
10.6	Ash Storage Silos	682	0	2,102	0	2,785	9.7%	271	0%	0	10.0%	306	3,362	6
10.7	Ash Transport & Feed Equipment	4,417	0	4,525	0	8,942	9.5%	846	0%	0	10.0%	979	10,766	20
10.8	Misc. Ash Handling Equipment	0	0	0	0	0	0.0%	0	0%	0	0.0%	0	0	0
10.9	Ash/Spent Sorbent Foundation	0	162	191	0	353	9.3%	33	0%	0	20.0%	77	463	1
	SUBTOTAL 10.	**$5,100**	**$162**	**$6,818**	**$0**	**$12,080**		**$1,150**		**$0**		**$1,362**	**$14,591**	**$27**
11	ACCESSORY ELECTRIC PLANT													
11.1	Generator Equipment	1,677	0	272	0	1,950	9.3%	181	0%	0	7.5%	160	2,290	4
11.2	Station Service Equipment	4,700	0	1,544	0	6,244	9.6%	597	0%	0	7.5%	513	7,354	13
11.3	Switchgear & Motor Control	5,403	0	918	0	6,322	9.3%	585	0%	0	10.0%	691	7,597	14
11.4	Conduit & Cable Tray	0	3,388	11,713	0	15,101	9.6%	1,445	0%	0	15.0%	2,482	19,028	35
11.5	Wire & Cable	0	6,392	12,339	0	18,731	8.4%	1,578	0%	0	15.0%	3,046	23,356	42
11.6	Protective Equipment	260	0	885	0	1,146	9.8%	112	0%	0	10.0%	126	1,383	3
11.7	Standby Equipment	1,328	0	30	0	1,358	9.5%	129	0%	0	10.0%	149	1,635	3
11.8	Main Power Transformers	7,634	0	129	0	7,762	7.6%	590	0%	0	10.0%	835	9,187	17
11.9	Electrical Foundations	0	329	808	0	1,137	9.5%	108	0%	0	20.0%	249	1,494	3
	SUBTOTAL 11.	**$21,002**	**$10,109**	**$28,639**	**$0**	**$59,750**		**$5,325**		**$0**		**$8,250**	**$73,326**	**$133**
12	INSTRUMENTATION & CONTROL													
12.1	PC Control Equipment	w/12.7	0	w/12.7	0	0	0%	0	0%	0	0.0%	0	0	0
12.2	Combustion Turbine Control	N/A	0	N/A	0	0	0%	0	0%	0	0.0%	0	0	0
12.3	Steam Turbine Control	w/8.1	0	w/8.1	0	0	0%	0	0%	0	0.0%	0	0	0
12.4	Other Major Component Control	0	0	0	0	0	0%	0	0%	0	0.0%	0	0	0
12.5	Signal Processing Equipment	W/12.7	0	w/12.7	0	0	0%	0	0%	0	0.0%	0	0	0
12.6	Control Boards, Panels & Racks	509	0	305	0	813	9.6%	78	0%	0	15.0%	134	1,025	2
12.7	Computer Accessories	5,134	0	897	0	6,032	9.5%	574	0%	0	10.0%	661	7,267	13
12.8	Instrument Wiring & Tubing	2,783	0	5,521	0	8,305	8.5%	707	0%	0	15.0%	1,352	10,364	19
12.9	Other I & C Equipment	1,451	0	3,292	0	4,743	9.7%	462	0%	0	10.0%	521	5,726	10
	SUBTOTAL 12.	**$9,877**	**$0**	**$10,016**	**$0**	**$19,893**		**$1,822**		**$0**		**$2,667**	**$24,382**	**$44**
13	IMPROVEMENTS TO SITE													
13.1	Site Preparation	0	55	1,107	0	1,163	9.9%	115	0%	0	20.0%	255	1,533	3
13.2	Site Improvements	0	1,838	2,283	0	4,121	9.8%	405	0%	0	20.0%	905	5,430	10
13.3	Site Facilities	3,294	0	3,248	0	6,542	9.8%	642	0%	0	20.0%	1,437	8,620	16
	SUBTOTAL 13.	**$3,294**	**$1,893**	**$6,638**	**$0**	**$11,825**		**$1,161**		**$0**		**$2,597**	**$15,583**	**$28**

Exhibit 3-64 Case 1D (85%) Capital Costs (continued)

Department:	NETL Office of Systems Analysis and Planning			**Cost Base:**	Jun 2007
Project:	CO2 Capture Sensitivity Systems Analysis			**Prepared:**	27-May-11
Case:	Case 1D - Supercritical PC w/ 85% CO2 Capture				**x $1, 000**
Plant Size:	550.05 MW, net	Capital Charge Factor 0.1773	Capacity Factor 0.85		

Acct No.	Item/Description	Equipment Cost	Material Cost	Labor Direct	Labor Indirect	Bare Erected	Eng'g CM H.O. & %	Eng'g CM H.O. & Total	Process Cont. %	Process Cont. Total	Project Cont. %	Project Cont. Total	TOTAL PLANT COST $	TOTAL PLANT COST $/kW
14	BUILDINGS & STRUCTURES													
14.1	Boiler Building	0	8,828	7,764	0	16,592	9.0%	1,490	0%	0	15.0%	2,712	20,794	38
14.2	Turbine Building	0	12,760	11,892	0	24,652	9.0%	2,220	0%	0	15.0%	4,031	30,902	56
14.3	Administration Building	0	641	677	0	1,318	9.1%	119	0%	0	15.0%	216	1,653	3
14.4	Circulation Water Pumphouse	0	143	114	0	257	8.9%	23	0%	0	15.0%	42	322	1
14.5	Water Treatment Buildings	0	803	732	0	1,536	9.0%	137	0%	0	15.0%	251	1,924	3
14.6	Machine Shop	0	428	288	0	716	8.9%	64	0%	0	15.0%	117	897	2
14.7	Warehouse	0	290	291	0	582	9.0%	53	0%	0	15.0%	95	729	1
14.8	Other Buildings & Structures	0	237	202	0	439	9.0%	39	0%	0	15.0%	72	550	1
14.9	Waste Treating Building & Str.	0	452	1,370	0	1,822	9.4%	172	0%	0	15.0%	299	2,293	4
	SUBTOTAL 14.	**$0**	**$24,583**	**$23,331**	**$0**	**$47,914**		**$4,317**		**$0**		**$7,835**	**$60,065**	**$109**
	Total Cost	**$752,015**	**$52,896**	**$369,839**	**$0**	**$1,174,751**		**$110,436**		**$51,007**		**$189,260**	**$1,525,453**	**$2,773**

Owner's Costs			
Preproduction Costs			
6 Months All Labor		$10,262	$19
1 Month Maintenance Materials		$1,469	$3
1 Month Non-fuel Consumables		$1,299	$2
1 Month Waste Disposal		$320	$1
25% of 1 Months Fuel Cost at 100% CF		$1,942	$4
2% of TPC		$30,509	$55
Total		$45,800	$83
Inventory Capital			
60 day supply of fuel and consumables at 100% CF		$18,132	$33
0.5% of TPC (spare parts)		$7,627	$14
Total		$25,759	$47
Initial Cost for Catalyst and Chemicals		$2,280	$4
Land		$900	$2
Other Owner's Costs		$228,818	$416
Financing Costs		$41,187	$75
Total Overnight Costs (TOC)		**$1,870,197**	**$3,400.0**
TASC Multiplier	(IOU, high risk, 35 year)	1.140	
Total As-Spent Cost (TASC)		**$2,132,024**	**$3,876**

Exhibit 3-65 Case 1D Initial and Annual O&M Expenses

INITIAL & ANNUAL O&M EXPENSES

Case:	Case 1D - Supercritical PC w/ 85% CO2 Capture		
Plant Size (MWe):	550.05	**Heat Rate (Btu/kWh):**	11,819
Primary/Secondary Fuel:	Illinois #6 Bituminous Coal	**Fuel Cost ($/MM Btu):**	1.64
Design/Construction	5 years	**Book Life (yrs):**	30
TPC (Plant Cost) Year:	Jun 2007	**TPI Year:**	2015
Capacity Factor (%):	85	**CO_2 Captured (TPD):**	13446

OPERATING & MAINTENANCE LABOR

Operating Labor

Operating Labor Rate (base):	$34.65	$/hour
Operating Labor Burden:	30.00	% of base
Labor Overhead Charge:	25.00	% of labor

Operating Labor Requirements per Shift:	units/mod.	Total Plant
Skilled Operator	2.0	2.0
Operator	11.3	11.3
Foreman	1.0	1.0
Lab Tech's etc.	2.0	2.0
TOTAL Operating Jobs	16.3	16.3

	Annual Costs $	Annual Costs $/kW-net
Annual Operating Labor Cost (calc'd)	6,431,885	11.69
Maintenance Labor Cost (calc'd)	9,986,997	18.16
Administrative & Support Labor (calc'd)	4,104,721	7.46
Property Taxes & Insurance	$30,509,054	$55.466
TOTAL FIXED OPERATING COSTS	**$51,032,657**	**$92.778**

VARIABLE OPERATING COSTS

	$	$/kWh-net
Maintenance Material Costs (calc'd)	**$14,980,495**	**0.00366**

Consumables	Consumption Initial	Consumption /Day	Unit Cost	Initial Cost	$	$/kWh-net
Water (/1000 gallons)	0	7,611	1.08	$0	$2,550,103	0.00062
Chemicals						
MU & WT Chem. (lb)	0	36,840	0.17	$0	$1,943,058	0.00047
Limestone (ton)	0	676	21.63	$0	$4,536,881	0.00111
Carbon (Hg Removal) (lb)	0	0	1.05	$0	$0	0.00000
MEA Solvent (ton)	939	1.35	2249.89	$2,112,135	$942,347	0.00023
Caustic Soda, NaOH (ton)	66	6.63	433.68	$28,768	$892,528	0.00022
Sulfuric acid, H_2SO_4 (ton)	63	6.33	138.78	$8,785	$272,542	0.00007
Corrosion Inhibitor	0	0	0.00	$129,850	$6,271	0.00000
Activated C, MEA (lb)	0	1,590	1.05	$0	$518,099	0.00013
Ammonia, 28% soln (ton)	0	21	129.80	$0	$826,568	0.00020
Subtotal Chemicals				**$2,279,537**	**$9,938,295**	**0.00243**
Other						
Supplemental Fuel (MMBtu)	0	0	0.00	$0	$0	0.00000
SCR Catalyst Replacement	w/equip.	0.42	5,775.94	$0	$759,439	0.00019
Emission Penalties	0	0	0.00	$0	$0	0.00000
Subtotal Other				**$0**	**$759,439**	**0.00019**
Waste Disposal						
Spent Mercury Catalyst (lb)	0	0	0.31	$0	$0	0.00000
Flyash (ton)	0	519	16.23	$0	$2,612,200	0.00064
Bottom Ash (ton)	0	130	16.23	$0	$653,050	0.00016
Subtotal Solid Waste Disposal				**$0**	**$3,265,250**	**0.00080**
By-products & Emissions						
Gypsum (tons)	0	0	0.00	$0	$0	0.00000
Sulfur (tons)	0	0	0.00	$0	$0	0.00000
Subtotal By-Products				**$0**	**$0**	**0.00000**
TOTAL VARIABLE OPERATING COSTS					**$31,493,582**	**0.00769**
Coal FUEL (tons)	**200,622**	**6,687**	**38.19**	**$7,660,781**	**$79,225,242**	**0.01934**

Exhibit 3-66 Case 1E (90%) Capital Costs

Department:	NETL Office of Systems Analysis and Planning			**Cost Base:**	Jun 2007
Project:	CO2 Capture Sensitivity Systems Analysis			**Prepared:**	14-Jun-10
Case:	Case 1E - Supercritical PC w/ 90% CO2 Capture				**x $1, 000**
Plant Size:	550.01 MW, net	Capital Charge Factor 0.1773	Capacity Factor 0.85		

Acct No.	Item/Description	Equipment Cost	Material Cost	Labor Direct	Labor Indirect	Bare Erected	Eng'g CM H.O. & %	Eng'g CM H.O. & Total	Process Cont. %	Process Cont. Total	Project Cont. %	Project Cont. Total	TOTAL PLANT COST $	TOTAL PLANT COST $/kW
1	COAL HANDLING SYSTEM													
1.1	Coal Receive & Unload	4,023	0	1,837	0	5,860	8.9%	523	0%	0	15.0%	957	7,341	13
1.2	Coal Stackout & Reclaim	5,199	0	1,178	0	6,377	8.8%	558	0%	0	15.0%	1,040	7,975	14
1.3	Coal Conveyors & Yd Crus	4,833	0	1,165	0	5,999	8.8%	526	0%	0	15.0%	979	7,504	14
1.4	Other Coal Handling	1,265	0	270	0	1,534	8.7%	134	0%	0	15.0%	250	1,919	3
1.5	Sorbent Receive & Unload	166	0	50	0	216	8.8%	19	0%	0	15.0%	35	270	0
1.6	Sorbent Stackout & Reclaim	2,680	0	491	0	3,171	8.7%	276	0%	0	15.0%	517	3,965	7
1.7	Sorbent Conveyors	956	207	235	0	1,398	8.7%	121	0%	0	15.0%	228	1,747	3
1.8	Other Sorbent Handling	578	135	303	0	1,016	8.8%	90	0%	0	15.0%	166	1,272	2
1.9	Coal & Sorbent Hnd.Foundations	0	4,947	6,240	0	11,187	9.3%	1,046	0%	0	15.0%	1,835	14,068	26
	SUBTOTAL 1.	**$19,700**	**$5,289**	**$11,769**	**$0**	**$36,758**		**$3,293**		**$0**		**$6,008**	**$46,059**	**$84**
2	COAL PREP & FEED SYSTEMS													
2.1	Coal Crushing & Drying	2,331	0	454	0	2,785	8.7%	243	0%	0	15.0%	454	3,482	6
2.2	Prepared Coal Storage & Feed	5,967	0	1,303	0	7,270	8.7%	636	0%	0	15.0%	1,186	9,091	17
2.3	Slurry Prep & Feed	0	0	0	0	0	0.0%	0	0%	0	0.0%	0	0	0
2.4	Misc. Coal Prep & Feed	0	0	0	0	0	0.0%	0	0%	0	0.0%	0	0	0
2.5	Sorbent Prep Equipment	4,567	197	949	0	5,713	8.7%	498	0%	0	15.0%	932	7,142	13
2.6	Sorbent Storage & Feed	550	0	211	0	761	8.9%	68	0%	0	15.0%	124	953	2
2.7	Sorbent Injection System	0	0	0	0	0	0.0%	0	0%	0	0.0%	0	0	0
2.8	Booster Air Supply System	0	0	0	0	0	0.0%	0	0%	0	0.0%	0	0	0
2.9	Coal & Sorbent Feed Foundation	0	583	490	0	1,073	9.2%	99	0%	0	15.0%	176	1,347	2
	SUBTOTAL 2.	**$13,415**	**$780**	**$3,406**	**$0**	**$17,601**		**$1,543**		**$0**		**$2,872**	**$22,015**	**$40**
3	FEEDWATER & MISC. BOP SYSTEMS													
3.1	Feedwater System	21,729	0	7,019	0	28,748	8.8%	2,517	0%	0	15.0%	4,690	35,954	65
3.2	Water Makeup & Pretreating	6,520	0	2,099	0	8,618	9.4%	808	0%	0	20.0%	1,885	11,311	21
3.3	Other Feedwater Subsystems	6,652	0	2,811	0	9,463	8.9%	843	0%	0	15.0%	1,546	11,853	22
3.4	Service Water Systems	1,278	0	695	0	1,973	9.3%	183	0%	0	20.0%	431	2,588	5
3.5	Other Boiler Plant Systems	8,381	0	8,274	0	16,655	9.4%	1,562	0%	0	15.0%	2,733	20,950	38
3.6	FO Supply Sys & Nat Gas	274	0	342	0	616	9.3%	57	0%	0	15.0%	101	774	1
3.7	Waste Treatment Equipment	4,687	0	2,672	0	7,358	9.7%	713	0%	0	20.0%	1,614	9,685	18
3.8	Misc. Power Plant Equipment	2,906	0	888	0	3,794	9.6%	364	0%	0	20.0%	832	4,989	9
	SUBTOTAL 3.	**$52,425**	**$0**	**$24,800**	**$0**	**$77,225**		**$7,048**		**$0**		**$13,832**	**$98,105**	**$178**
4	PC BOILER & ACCESSORIES													
4.1	PC Boiler	185,896	0	104,307	0	290,203	9.7%	28,109	0.0%	0	10.0%	31,831	350,144	637
4.2	SCR (w/4.1)	0	0	0	0	0	0%	0	0%	0	0.0%	0	0	0
4.3	Open	0	0	0	0	0	0%	0	0%	0	0.0%	0	0	0
4.4	Boiler BoP (w/ID Fans)	0	0	0	0	0	0%	0	0%	0	0.0%	0	0	0
4.5	Primary Air System	w/4.1	0	w/4.1	0	0	0%	0	0%	0	0.0%	0	0	0
4.6	Secondary Air System	w/4.1	0	w/4.1	0	0	0%	0	0%	0	0.0%	0	0	0
4.7	Major Component Rigging	0	w/4.1	w/4.1	0	0	0%	0	0%	0	0.0%	0	0	0
4.8	PC Foundations	0	w/14.1	w/14.1	0	0	0%	0	0%	0	0.0%	0	0	0
	SUBTOTAL 4.	**$185,896**	**$0**	**$104,307**	**$0**	**$290,203**		**$28,109**		**$0**		**$31,831**	**$350,144**	**$637**

Exhibit 3-66 Case 1E (90%) Capital Costs (continued)

Department:	NETL Office of Systems Analysis and Planning			**Cost Base:**	Jun 2007
Project:	CO2 Capture Sensitivity Systems Analysis			**Prepared:**	14-Jun-10
Case:	Case 1E - Supercritical PC w/ 90% CO2 Capture				**x $1, 000**
Plant Size:	550.01 MW, net	Capital Charge Factor 0.1773	Capacity Factor 0.85		

Acct No.	Item/Description	Equipment Cost	Material Cost	Labor Direct	Labor Indirect	Bare Erected	Eng'g CM H.O. & %	Eng'g CM H.O. & Total	Process Cont. %	Process Cont. Total	Project Cont. %	Project Cont. Total	TOTAL PLANT COST $	TOTAL PLANT COST $/kW
5A	FLUE GAS CLEANUP							*						
5.1	Absorber Vessels & Accessories	80,030	0	17,229	0	97,259	9.5%	9,205	0%	0	10.0%	10,646	117,111	213
5.2	Other FGD	4,179	0	4,736	0	8,916	9.6%	859	0%	0	10.0%	977	10,752	20
5.3	Bag House & Accessories	20,320	0	12,896	0	33,216	9.6%	3,177	0%	0	10.0%	3,639	40,032	73
5.4	Other Particulate Removal Materials	1,328	0	1,421	0	2,749	9.6%	265	0%	0	10.0%	301	3,315	6
5.5	Gypsum Dewatering System	5,366	0	911	0	6,278	9.4%	593	0%	0	10.0%	687	7,558	14
5.6	Mercury Removal System	0	0	0	0	0	0.0%	0	0%	0	0.0%	0	0	0
5.7	Open	0	0	0	0	0	0.0%	0	0%	0	0.0%	0	0	0
5.8	Open	0	0	0	0	0	0.0%	0	0%	0	0.0%	0	0	0
5.9	Open	0	0	0	0	0	0.0%	0	0%	0	0.0%	0	0	0
	SUBTOTAL 5A.	**$111,224**	**$0**	**$37,193**	**$0**	**$148,417**		**$14,099**		**$0**		**$16,252**	**$178,767**	**$325**
5B	CO2 REMOVAL & COMPRESSION													
5B.1	CO2 Removal System	205,392	0	62,194	0	267,586	9.5%	25,396	20%	53,517	20.0%	69,300	415,800	756
5B.2	CO2 Compression & Drying	27,599	0	8,620	0	36,219	9.5%	3,438	0%	0	20.0%	7,932	47,589	87
5B.3	CO2 Pipeline											0	0	0
5B.4	CO2 Storage											0	0	0
5B.5	CO2 Monitoring											0	0	0
	SUBTOTAL 5B.	**$232,992**	**$0**	**$70,814**	**$0**	**$303,806**		**$28,834**		**$53,517**		**$77,231**	**$463,389**	**$843**
6	COMBUSTION TURBINE/ACCESSORIES													
6.1	Combustion Turbine Generator	0	0	0	0	0	10%	0	0%	0	0.0%	0	0	0
6.2	Combustion Turbine Accessories	0	0	0	0	0	10%	0	0%	0	0.0%	0	0	0
6.3	Compressed Air Piping	0	0	0	0	0	10%	0	0%	0	0.0%	0	0	0
6.4	Combustion Turbine Foundations	0	0	0	0	0	10%	0	0%	0	0.0%	0	0	0
	SUBTOTAL 6.	**$0**	**$0**	**$0**	**$0**	**$0**		**$0**		**$0**		**$0**	**$0**	**$0**
7	HRSG, DUCTING & STACK													
7.1	Flue Gas Recycle Heat Exchanger	N/A	0	N/A	0	0	0%	0	0%	0	0.0%	0	0	0
7.2	SCR System	0	0	0	0	0	0%	0	0%	0	0.0%	0	0	0
7.3	Ductwork	9,472	0	6,086	0	15,557	8.7%	1,359	0%	0	15.0%	2,537	19,454	35
7.4	Stack	8,445	0	4,942	0	13,387	9.6%	1,279	0%	0	10.0%	1,467	16,132	29
7.9	HRSG, Duct & Stack Foundations	0	1,019	1,158	0	2,177	9.3%	203	0%	0	20.0%	476	2,856	5
	SUBTOTAL 7.	**$17,917**	**$1,019**	**$12,185**	**$0**	**$31,121**		**$2,841**		**$0**		**$4,480**	**$38,442**	**$70**
8	STEAM TURBINE GENERATOR													
8.1	Steam TG & Accessories	55,108	0	7,313	0	62,421	9.6%	5,977	0%	0	10.0%	6,840	75,238	137
8.2	Turbine Plant Auxiliaries	371	0	795	0	1,166	9.7%	113	0%	0	10.0%	128	1,407	3
8.3	Condenser & Auxiliaries	4,825	0	1,797	0	6,622	9.5%	629	0%	0	10.0%	725	7,977	15
8.4	Steam Piping	18,786	0	9,263	0	28,049	8.3%	2,341	0%	0	15.0%	4,559	34,949	64
8.9	TG Foundations	0	1,165	1,841	0	3,007	9.4%	283	0%	0	20.0%	658	3,947	7
	SUBTOTAL 8.	**$79,091**	**$1,165**	**$21,009**	**$0**	**$101,265**		**$9,343**		**$0**		**$12,909**	**$123,517**	**$225**
9	COOLING WATER SYSTEM													
9.1	Cooling Towers	13,922	0	4,335	0	18,257	9.5%	1,733	0%	0	10.0%	1,999	21,989	40
9.2	Circulating Water Pumps	2,502	0	192	0	2,694	8.6%	230	0%	0	10.0%	292	3,217	6
9.3	Circ. Water System Auxiliaries	650	0	87	0	737	9.4%	70	0%	0	10.0%	81	887	2
9.4	Circ. Water Piping	0	5,157	4,998	0	10,154	9.2%	935	0%	0	15.0%	1,663	12,753	23
9.5	Make-up Water System	604	0	807	0	1,411	9.5%	134	0%	0	15.0%	232	1,776	3
9.6	Component Cooling Water System	515	0	410	0	925	9.4%	87	0%	0	15.0%	152	1,164	2
9.9	Circ. Water System Foundations	0	3,102	4,929	0	8,031	9.4%	756	0%	0	20.0%	1,757	10,544	19
	SUBTOTAL 9.	**$18,194**	**$8,259**	**$15,757**	**$0**	**$42,210**		**$3,945**		**$0**		**$6,176**	**$52,331**	**$95**

Exhibit 3-66 Case 1E (90%) Capital Costs (continued)

Department:	NETL Office of Systems Analysis and Planning			**Cost Base:**	Jun 2007
Project:	CO2 Capture Sensitivity Systems Analysis			**Prepared:**	14-Jun-10
Case:	Case 1E - Supercritical PC w/ 90% CO2 Capture				**x $1, 000**
Plant Size:	550.01 MW, net	Capital Charge Factor 0.1773	Capacity Factor 0.85		

Acct No.	Item/Description	Equipment Cost	Material Cost	Labor Direct	Labor Indirect	Bare Erected	Eng'g CM H.O. & %	Eng'g CM H.O. & Total	Process Cont. %	Process Cont. Total	Project Cont. %	Project Cont. Total	TOTAL PLANT COST $	TOTAL PLANT COST $/kW
10	ASH/SPENT SORBENT HANDLING SYS													
10.1	Ash Coolers	N/A	0	N/A	0	0	0%	0	0%	0	0.0%	0	0	0
10.2	Cyclone Ash Letdown	N/A	0	N/A	0	0	0%	0	0%	0	0.0%	0	0	0
10.3	HGCU Ash Letdown	N/A	0	N/A	0	0	0%	0	0%	0	0.0%	0	0	0
10.4	High Temperature Ash Piping	N/A	0	N/A	0	0	0%	0	0%	0	0.0%	0	0	0
10.5	Other Ash Recovery Equipment	N/A	0	N/A	0	0	0%	0	0%	0	0.0%	0	0	0
10.6	Ash Storage Silos	691	0	2,129	0	2,819	9.7%	275	0%	0	10.0%	309	3,403	6
10.7	Ash Transport & Feed Equipment	4,472	0	4,581	0	9,053	9.5%	856	0%	0	10.0%	991	10,900	20
10.8	Misc. Ash Handling Equipment	0	0	0	0	0	0.0%	0	0%	0	0.0%	0	0	0
10.9	Ash/Spent Sorbent Foundation	0	164	193	0	357	9.3%	33	0%	0	20.0%	78	469	1
	SUBTOTAL 10.	**$5,163**	**$164**	**$6,903**	**$0**	**$12,230**		**$1,164**		**$0**		**$1,378**	**$14,772**	**$27**
11	ACCESSORY ELECTRIC PLANT													
11.1	Generator Equipment	1,687	0	274	0	1,961	9.3%	182	0%	0	7.5%	161	2,303	4
11.2	Station Service Equipment	4,824	0	1,585	0	6,410	9.6%	613	0%	0	7.5%	527	7,549	14
11.3	Switchgear & Motor Control	5,547	0	943	0	6,489	9.3%	601	0%	0	10.0%	709	7,799	14
11.4	Conduit & Cable Tray	0	3,477	12,024	0	15,501	9.6%	1,484	0%	0	15.0%	2,548	19,533	36
11.5	Wire & Cable	0	6,562	12,667	0	19,229	8.4%	1,620	0%	0	15.0%	3,127	23,976	44
11.6	Protective Equipment	260	0	885	0	1,146	9.8%	112	0%	0	10.0%	126	1,383	3
11.7	Standby Equipment	1,334	0	30	0	1,364	9.5%	129	0%	0	10.0%	149	1,643	3
11.8	Main Power Transformers	7,634	0	129	0	7,762	7.6%	590	0%	0	10.0%	835	9,187	17
11.9	Electrical Foundations	0	332	813	0	1,145	9.5%	109	0%	0	20.0%	251	1,504	3
	SUBTOTAL 11.	**$21,286**	**$10,371**	**$29,350**	**$0**	**$61,006**		**$5,439**		**$0**		**$8,432**	**$74,877**	**$136**
12	INSTRUMENTATION & CONTROL													
12.1	PC Control Equipment	w/12.7	0	w/12.7	0	0	0%	0	0%	0	0.0%	0	0	0
12.2	Combustion Turbine Control	N/A	0	N/A	0	0	0%	0	0%	0	0.0%	0	0	0
12.3	Steam Turbine Control	w/8.1	0	w/8.1	0	0	0%	0	0%	0	0.0%	0	0	0
12.4	Other Major Component Control	0	0	0	0	0	0%	0	0%	0	0.0%	0	0	0
12.5	Signal Processing Equipment	W/12.7	0	w/12.7	0	0	0%	0	0%	0	0.0%	0	0	0
12.6	Control Boards, Panels & Racks	513	0	307	0	820	9.6%	79	0%	0	15.0%	135	1,033	2
12.7	Computer Accessories	5,174	0	904	0	6,079	9.5%	579	0%	0	10.0%	666	7,323	13
12.8	Instrument Wiring & Tubing	2,805	0	5,564	0	8,369	8.5%	713	0%	0	15.0%	1,362	10,444	19
12.9	Other I & C Equipment	1,462	0	3,318	0	4,780	9.7%	466	0%	0	10.0%	525	5,770	10
	SUBTOTAL 12.	**$9,954**	**$0**	**$10,094**	**$0**	**$20,048**		**$1,836**		**$0**		**$2,687**	**$24,571**	**$45**
13	IMPROVEMENTS TO SITE													
13.1	Site Preparation	0	56	1,112	0	1,168	9.9%	115	0%	0	20.0%	257	1,540	3
13.2	Site Improvements	0	1,847	2,294	0	4,140	9.8%	407	0%	0	20.0%	909	5,456	10
13.3	Site Facilities	3,309	0	3,264	0	6,573	9.8%	645	0%	0	20.0%	1,444	8,662	16
	SUBTOTAL 13.	**$3,309**	**$1,902**	**$6,669**	**$0**	**$11,881**		**$1,167**		**$0**		**$2,610**	**$15,658**	**$28**

Exhibit 3-66 Case 1E (90%) Capital Costs (continued)

Department:	NETL Office of Systems Analysis and Planning			**Cost Base:**	Jun 2007
Project:	CO2 Capture Sensitivity Systems Analysis			**Prepared:**	27-May-11
Case:	Case 1E - Supercritical PC w/ 90% CO2 Capture				**x $1, 000**
Plant Size:	550.01 MW, net	Capital Charge Factor 0.1773	Capacity Factor 0.85		

Acct No.	Item/Description	Equipment Cost	Material Cost	Labor Direct	Labor Indirect	Bare Erected	Eng'g CM H.O. & %	Eng'g CM H.O. & Total	Process Cont. %	Process Cont. Total	Project Cont. %	Project Cont. Total	TOTAL PLANT COST $	TOTAL PLANT COST $/kW
14	BUILDINGS & STRUCTURES													
14.1	Boiler Building	0	8,839	7,773	0	16,612	9.0%	1,492	0%	0	15.0%	2,716	20,819	38
14.2	Turbine Building	0	12,784	11,915	0	24,699	9.0%	2,224	0%	0	15.0%	4,038	30,961	56
14.3	Administration Building	0	642	679	0	1,321	9.1%	120	0%	0	15.0%	216	1,657	3
14.4	Circulation Water Pumphouse	0	148	118	0	266	8.9%	24	0%	0	15.0%	43	333	1
14.5	Water Treatment Buildings	0	831	757	0	1,588	9.0%	142	0%	0	15.0%	260	1,990	4
14.6	Machine Shop	0	429	289	0	718	8.9%	64	0%	0	15.0%	117	899	2
14.7	Warehouse	0	291	292	0	583	9.0%	53	0%	0	15.0%	95	731	1
14.8	Other Buildings & Structures	0	238	202	0	440	9.0%	39	0%	0	15.0%	72	552	1
14.9	Waste Treating Building & Str.	0	453	1,375	0	1,828	9.4%	173	0%	0	15.0%	300	2,301	4
	SUBTOTAL 14.	**$0**	**$24,655**	**$23,400**	**$0**	**$48,055**		**$4,330**		**$0**		**$7,858**	**$60,242**	**$110**
	Total Cost	**$770,565**	**$53,605**	**$377,655**	**$0**	**$1,201,825**		**$112,991**		**$53,517**		**$194,556**	**$1,562,889**	**$2,842**

Owner's Costs			
Preproduction Costs			
6 Months All Labor		$10,406	$19
1 Month Maintenance Materials		$1,503	$3
1 Month Non-fuel Consumables		$1,356	$2
1 Month Waste Disposal		$327	$1
25% of 1 Months Fuel Cost at 100% CF		$1,985	$4
2% of TPC		$31,258	$57
Total		$46,834	$85
Inventory Capital			
60 day supply of fuel and consumables at 100% CF		$18,592	$34
0.5% of TPC (spare parts)		$7,814	$14
Total		$26,406	$48
Initial Cost for Catalyst and Chemicals		$2,477	$5
Land		$900	$2
Other Owner's Costs		$234,433	$426
Financing Costs		$42,198	$77
Total Overnight Costs (TOC)		**$1,916,138**	**$3,483.8**
TASC Multiplier	(IOU, high risk, 35 year)	1.140	
Total As-Spent Cost (TASC)		**$2,184,397**	**$3,972**

Exhibit 3-67 Case 1E Initial and Annual O&M Expenses

INITIAL & ANNUAL O&M EXPENSES			
Case:	Case 1E - Supercritical PC w/ 90% CO2 Capture		
Plant Size (MWe):	550.01	**Heat Rate (Btu/kWh):**	12,083
Primary/Secondary Fuel:	Illinois #6 Bituminous Coal	**Fuel Cost ($/MM Btu):**	1.64
Design/Construction	5 years	**Book Life (yrs):**	30
TPC (Plant Cost) Year:	Jun 2007	**TPI Year:**	2015
Capacity Factor (%):	85	**CO_2 Captured (TPD):**	14609

OPERATING & MAINTENANCE LABOR

Operating Labor

Operating Labor Rate (base):	$34.65	$/hour
Operating Labor Burden:	30.00	% of base
Labor Overhead Charge:	25.00	% of labor

Operating Labor Requirements per Shift:	units/mod.	Total Plant
Skilled Operator	2.0	2.0
Operator	11.3	11.3
Foreman	1.0	1.0
Lab Tech's etc.	2.0	2.0
TOTAL Operating Jobs	16.3	16.3

	Annual Costs $	Annual Costs $/kW-net
Annual Operating Labor Cost (calc'd)	6,431,885	11.69
Maintenance Labor Cost (calc'd)	10,217,164	18.58
Administrative & Support Labor (calc'd)	4,162,262	7.57
Property Taxes & Insurance	$31,257,786	$56.831
TOTAL FIXED OPERATING COSTS	**$52,069,097**	**$94.669**

VARIABLE OPERATING COSTS

	$	$/kWh-net
Maintenance Material Costs (calc'd)	**$15,325,746**	**0.00374**

Consumables	Consumption Initial	Consumption /Day	Unit Cost	Initial Cost	$	$/kWh-net
Water (/1000 gallons)	0	8,007	1.08	$0	$2,682,853	0.00066
Chemicals						
MU & WT Chem. (lb)	0	38,758	0.17	$0	$2,044,208	0.00050
Limestone (ton)	0	692	21.63	$0	$4,640,812	0.00113
Carbon (Hg Removal) (lb)	0	0	1.05	$0	$0	0.00000
MEA Solvent (ton)	1,020	1.47	2249.89	$2,294,818	$1,023,853	0.00025
Caustic Soda, NaOH (ton)	72	7.21	433.68	$31,256	$969,725	0.00024
Sulfuric acid, H_2SO_4 (ton)	69	6.88	138.78	$9,544	$296,115	0.00007
Corrosion Inhibitor	0	0	0.00	$141,081	$6,814	0.00000
Activated C, MEA (lb)	0	1,728	1.05	$0	$562,910	0.00014
Ammonia, 28% soln (ton)	0	21	129.80	$0	$844,943	0.00021
Subtotal Chemicals				**$2,476,699**	**$10,389,380**	**0.00254**
Other						
Supplemental Fuel (MMBtu)	0	0	0.00	$0	$0	0.00000
SCR Catalyst Replacement	w/equip.	0.42	5,775.94	$0	$759,439	0.00019
Emission Penalties	0	0	0.00	$0	$0	0.00000
Subtotal Other				**$0**	**$759,439**	**0.00019**
Waste Disposal						
Spent Mercury Catalyst (lb)	0	0	0.31	$0	$0	0.00000
Flyash (ton)	0	530	16.23	$0	$2,670,269	0.00065
Bottom Ash (ton)	0	133	16.23	$0	$667,567	0.00016
Subtotal Solid Waste Disposal				**$0**	**$3,337,836**	**0.00082**
By-products & Emissions						
Gypsum (tons)	0	0	0.00	$0	$0	0.00000
Sulfur (tons)	0	0	0.00	$0	$0	0.00000
Subtotal By-Products				**$0**	**$0**	**0.00000**
TOTAL VARIABLE OPERATING COSTS					**$32,495,254**	**0.00793**
Coal FUEL (tons)	**205,082**	**6,836**	**38.19**	**$7,831,079**	**$80,986,412**	**0.01978**

Exhibit 3-68 Case 1F (95%) Capital Costs

Department:	NETL Office of Systems Analysis and Planning			**Cost Base:**	Jun 2007
Project:	CO2 Capture Sensitivity Systems Analysis			**Prepared:**	14-Jun-10
Case:	Case 1F - Supercritical PC w/ 95% CO2 Capture				**x $1, 000**
Plant Size:	549.96 MW, net	Capital Charge Factor 0.1773	Capacity Factor 0.85		

Acct No.	Item/Description	Equipment Cost	Material Cost	Labor Direct	Labor Indirect	Bare Erected	Eng'g CM H.O. & %	Eng'g CM H.O. & Total	Process Cont. %	Process Cont. Total	Project Cont. %	Project Cont. Total	TOTAL PLANT COST $	TOTAL PLANT COST $/kW
1	COAL HANDLING SYSTEM													
1.1	Coal Receive & Unload	4,088	0	1,867	0	5,955	8.9%	532	0%	0	15.0%	973	7,459	14
1.2	Coal Stackout & Reclaim	5,283	0	1,197	0	6,480	8.8%	567	0%	0	15.0%	1,057	8,104	15
1.3	Coal Conveyors & Yd Crus	4,911	0	1,184	0	6,096	8.8%	534	0%	0	15.0%	995	7,625	14
1.4	Other Coal Handling	1,285	0	274	0	1,559	8.7%	136	0%	0	15.0%	254	1,950	4
1.5	Sorbent Receive & Unload	169	0	51	0	220	8.8%	19	0%	0	15.0%	36	275	0
1.6	Sorbent Stackout & Reclaim	2,726	0	500	0	3,226	8.7%	281	0%	0	15.0%	526	4,033	7
1.7	Sorbent Conveyors	973	210	239	0	1,422	8.7%	123	0%	0	15.0%	232	1,777	3
1.8	Other Sorbent Handling	588	138	308	0	1,033	8.8%	91	0%	0	15.0%	169	1,294	2
1.9	Coal & Sorbent Hnd.Foundations	0	5,027	6,341	0	11,368	9.3%	1,063	0%	0	15.0%	1,865	14,295	26
	SUBTOTAL 1.	**$20,022**	**$5,375**	**$11,961**	**$0**	**$37,358**		**$3,347**		**$0**		**$6,106**	**$46,810**	**$85**
2	COAL PREP & FEED SYSTEMS													
2.1	Coal Crushing & Drying	2,371	0	462	0	2,833	8.7%	247	0%	0	15.0%	462	3,542	6
2.2	Prepared Coal Storage & Feed	6,070	0	1,325	0	7,395	8.7%	647	0%	0	15.0%	1,206	9,248	17
2.3	Slurry Prep & Feed	0	0	0	0	0	0.0%	0	0%	0	0.0%	0	0	0
2.4	Misc. Coal Prep & Feed	0	0	0	0	0	0.0%	0	0%	0	0.0%	0	0	0
2.5	Sorbent Prep Equipment	4,647	200	965	0	5,812	8.7%	506	0%	0	15.0%	948	7,266	13
2.6	Sorbent Storage & Feed	560	0	214	0	774	8.9%	69	0%	0	15.0%	126	969	2
2.7	Sorbent Injection System	0	0	0	0	0	0.0%	0	0%	0	0.0%	0	0	0
2.8	Booster Air Supply System	0	0	0	0	0	0.0%	0	0%	0	0.0%	0	0	0
2.9	Coal & Sorbent Feed Foundation	0	593	498	0	1,091	9.2%	100	0%	0	15.0%	179	1,370	2
	SUBTOTAL 2.	**$13,647**	**$793**	**$3,464**	**$0**	**$17,904**		**$1,569**		**$0**		**$2,921**	**$22,394**	**$41**
3	FEEDWATER & MISC. BOP SYSTEMS													
3.1	Feedwater System	22,119	0	7,145	0	29,263	8.8%	2,562	0%	0	15.0%	4,774	36,599	67
3.2	Water Makeup & Pretreating	6,704	0	2,158	0	8,862	9.4%	831	0%	0	20.0%	1,939	11,631	21
3.3	Other Feedwater Subsystems	6,771	0	2,862	0	9,633	8.9%	859	0%	0	15.0%	1,574	12,065	22
3.4	Service Water Systems	1,314	0	715	0	2,029	9.3%	188	0%	0	20.0%	444	2,661	5
3.5	Other Boiler Plant Systems	8,544	0	8,436	0	16,980	9.4%	1,593	0%	0	15.0%	2,786	21,359	39
3.6	FO Supply Sys & Nat Gas	275	0	344	0	620	9.3%	58	0%	0	15.0%	102	779	1
3.7	Waste Treatment Equipment	4,723	0	2,692	0	7,415	9.7%	718	0%	0	20.0%	1,627	9,760	18
3.8	Misc. Power Plant Equipment	2,925	0	893	0	3,818	9.6%	367	0%	0	20.0%	837	5,022	9
	SUBTOTAL 3.	**$53,376**	**$0**	**$25,245**	**$0**	**$78,621**		**$7,175**		**$0**		**$14,081**	**$99,877**	**$182**
4	PC BOILER & ACCESSORIES													
4.1	PC Boiler	189,257	0	106,193	0	295,450	9.7%	28,617	0.0%	0	10.0%	32,407	356,474	648
4.2	SCR (w/4.1)	0	0	0	0	0	0%	0	0%	0	0.0%	0	0	0
4.3	Open	0	0	0	0	0	0%	0	0%	0	0.0%	0	0	0
4.4	Boiler BoP (w/ID Fans)	0	0	0	0	0	0%	0	0%	0	0.0%	0	0	0
4.5	Primary Air System	w/4.1	0	w/4.1	0	0	0%	0	0%	0	0.0%	0	0	0
4.6	Secondary Air System	w/4.1	0	w/4.1	0	0	0%	0	0%	0	0.0%	0	0	0
4.7	Major Component Rigging	0	w/4.1	w/4.1	0	0	0%	0	0%	0	0.0%	0	0	0
4.8	PC Foundations	0	w/14.1	w/14.1	0	0	0%	0	0%	0	0.0%	0	0	0
	SUBTOTAL 4.	**$189,257**	**$0**	**$106,193**	**$0**	**$295,450**		**$28,617**		**$0**		**$32,407**	**$356,474**	**$648**

Exhibit 3-68 Case 1F (95%) Capital Costs (continued)

Department:	NETL Office of Systems Analysis and Planning			**Cost Base:**	Jun 2007
Project:	CO2 Capture Sensitivity Systems Analysis			**Prepared:**	14-Jun-10
Case:	Case 1F - Supercritical PC w/ 95% CO2 Capture				**x $1, 000**
Plant Size:	549.96 MW, net	Capital Charge Factor 0.1773	Capacity Factor 0.85		

Acct No.	Item/Description	Equipment Cost	Material Cost	Labor Direct	Labor Indirect	Bare Erected	Eng'g CM H.O. & %	Eng'g CM H.O. & Total	Process Cont. %	Process Cont. Total	Project Cont. %	Project Cont. Total	TOTAL PLANT COST $	TOTAL PLANT COST $/kW
5A	FLUE GAS CLEANUP							*						
5.1	Absorber Vessels & Accessories	81,546	0	17,555	0	99,101	9.5%	9,379	0%	0	10.0%	10,848	119,328	217
5.2	Other FGD	4,259	0	4,826	0	9,084	9.6%	875	0%	0	10.0%	996	10,955	20
5.3	Bag House & Accessories	20,734	0	13,158	0	33,892	9.6%	3,242	0%	0	10.0%	3,713	40,847	74
5.4	Other Particulate Removal Materials	1,354	0	1,449	0	2,804	9.6%	270	0%	0	10.0%	307	3,381	6
5.5	Gypsum Dewatering System	5,455	0	926	0	6,381	9.4%	603	0%	0	10.0%	698	7,683	14
5.6	Mercury Removal System	0	0	0	0	0	0.0%	0	0%	0	0.0%	0	0	0
5.7	Open	0	0	0	0	0	0.0%	0	0%	0	0.0%	0	0	0
5.8	Open	0	0	0	0	0	0.0%	0	0%	0	0.0%	0	0	0
5.9	Open	0	0	0	0	0	0.0%	0	0%	0	0.0%	0	0	0
	SUBTOTAL 5A.	**$113,347**	**$0**	**$37,915**	**$0**	**$151,262**		**$14,369**		**$0**		**$16,563**	**$182,194**	**$331**
5B	CO2 REMOVAL & COMPRESSION													
5B.1	CO2 Removal System	215,143	0	65,147	0	280,290	9.5%	26,602	20%	56,058	20.0%	72,590	435,539	792
5B.2	CO2 Compression & Drying	28,843	0	9,008	0	37,852	9.5%	3,593	0%	0	20.0%	8,289	49,734	90
5B.3	CO2 Pipeline											0	0	0
5B.4	CO2 Storage											0	0	0
5B.5	CO2 Monitoring											0	0	0
	SUBTOTAL 5B.	**$243,986**	**$0**	**$74,155**	**$0**	**$318,141**		**$30,195**		**$56,058**		**$80,879**	**$485,273**	**$882**
6	COMBUSTION TURBINE/ACCESSORIES													
6.1	Combustion Turbine Generator	0	0	0	0	0	10%	0	0%	0	0.0%	0	0	0
6.2	Combustion Turbine Accessories	0	0	0	0	0	10%	0	0%	0	0.0%	0	0	0
6.3	Compressed Air Piping	0	0	0	0	0	10%	0	0%	0	0.0%	0	0	0
6.4	Combustion Turbine Foundations	0	0	0	0	0	10%	0	0%	0	0.0%	0	0	0
	SUBTOTAL 6.	**$0**	**$0**	**$0**	**$0**	**$0**		**$0**		**$0**		**$0**	**$0**	**$0**
7	HRSG, DUCTING & STACK													
7.1	Flue Gas Recycle Heat Exchanger	N/A	0	N/A	0	0	0%	0	0%	0	0.0%	0	0	0
7.2	SCR System	0	0	0	0	0	0%	0	0%	0	0.0%	0	0	0
7.3	Ductwork	9,565	0	6,146	0	15,711	8.7%	1,372	0%	0	15.0%	2,562	19,646	36
7.4	Stack	8,512	0	4,981	0	13,494	9.6%	1,289	0%	0	10.0%	1,478	16,261	30
7.9	HRSG, Duct & Stack Foundations	0	1,023	1,162	0	2,184	9.3%	204	0%	0	20.0%	478	2,866	5
	SUBTOTAL 7.	**$18,078**	**$1,023**	**$12,289**	**$0**	**$31,389**		**$2,865**		**$0**		**$4,518**	**$38,773**	**$71**
8	STEAM TURBINE GENERATOR													
8.1	Steam TG & Accessories	55,493	0	7,364	0	62,857	9.6%	6,018	0%	0	10.0%	6,887	75,762	138
8.2	Turbine Plant Auxiliaries	374	0	800	0	1,174	9.7%	114	0%	0	10.0%	129	1,417	3
8.3	Condenser & Auxiliaries	4,692	0	1,748	0	6,440	9.5%	612	0%	0	10.0%	705	7,757	14
8.4	Steam Piping	19,128	0	9,432	0	28,560	8.3%	2,384	0%	0	15.0%	4,641	35,585	65
8.9	TG Foundations	0	1,173	1,854	0	3,027	9.4%	285	0%	0	20.0%	662	3,974	7
	SUBTOTAL 8.	**$79,687**	**$1,173**	**$21,197**	**$0**	**$102,058**		**$9,413**		**$0**		**$13,025**	**$124,496**	**$226**
9	COOLING WATER SYSTEM													
9.1	Cooling Towers	14,317	0	4,458	0	18,776	9.5%	1,782	0%	0	10.0%	2,056	22,614	41
9.2	Circulating Water Pumps	2,590	0	199	0	2,789	8.6%	238	0%	0	10.0%	303	3,330	6
9.3	Circ. Water System Auxiliaries	668	0	89	0	757	9.4%	71	0%	0	10.0%	83	911	2
9.4	Circ. Water Piping	0	5,292	5,129	0	10,422	9.2%	960	0%	0	15.0%	1,707	13,089	24
9.5	Make-up Water System	618	0	826	0	1,445	9.5%	137	0%	0	15.0%	237	1,819	3
9.6	Component Cooling Water System	529	0	421	0	950	9.4%	89	0%	0	15.0%	156	1,194	2
9.9	Circ. Water System Foundations	0	3,178	5,049	0	8,226	9.4%	774	0%	0	20.0%	1,800	10,800	20
	SUBTOTAL 9.	**$18,722**	**$8,470**	**$16,171**	**$0**	**$43,363**		**$4,053**		**$0**		**$6,342**	**$53,757**	**$98**

Exhibit 3-68 Case 1F (95%) Capital Costs (continued)

		Department:	NETL Office of Systems Analysis and Planning									**Cost Base:**	Jun 2007	
		Project:	CO2 Capture Sensitivity Systems Analysis									**Prepared:**	14-Jun-10	
		Case:	Case 1F - Supercritical PC w/ 95% CO2 Capture										**x $1, 000**	
		Plant Size:	549.96	MW, net			Capital Charge Factor	0.1773	Capacity Factor	0.85				
			Equipment	**Material**	**Labor**		**Bare**	**Eng'g CM H.O. &**		**Process Cont.**		**Project Cont.**		**TOTAL PLANT COST**	
Acct No.		**Item/Description**	**Cost**	**Cost**	**Direct**	**Indirect**	**Erected**	**%**	**Total**	**%**	**Total**	**%**	**Total**	**$**	**$/kW**
10		ASH/SPENT SORBENT HANDLING SYS													
	10.1	Ash Coolers	N/A	0	N/A	0	0	0%	0	0%	0	0.0%	0	0	0
	10.2	Cyclone Ash Letdown	N/A	0	N/A	0	0	0%	0	0%	0	0.0%	0	0	0
	10.3	HGCU Ash Letdown	N/A	0	N/A	0	0	0%	0	0%	0	0.0%	0	0	0
	10.4	High Temperature Ash Piping	N/A	0	N/A	0	0	0%	0	0%	0	0.0%	0	0	0
	10.5	Other Ash Recovery Equipment	N/A	0	N/A	0	0	0%	0	0%	0	0.0%	0	0	0
	10.6	Ash Storage Silos	701	0	2,160	0	2,860	9.7%	279	0%	0	10.0%	314	3,453	6
	10.7	Ash Transport & Feed Equipment	4,537	0	4,648	0	9,185	9.5%	869	0%	0	10.0%	1,005	11,058	20
	10.8	Misc. Ash Handling Equipment	0	0	0	0	0	0.0%	0	0%	0	0.0%	0	0	0
	10.9	Ash/Spent Sorbent Foundation	0	167	196	0	363	9.3%	34	0%	0	20.0%	79	476	1
		SUBTOTAL 10.	**$5,238**	**$167**	**$7,003**	**$0**	**$12,408**		**$1,181**		**$0**		**$1,399**	**$14,987**	**$27**
11		ACCESSORY ELECTRIC PLANT													
	11.1	Generator Equipment	1,696	0	275	0	1,971	9.3%	183	0%	0	7.5%	162	2,315	4
	11.2	Station Service Equipment	4,947	0	1,625	0	6,573	9.6%	629	0%	0	7.5%	540	7,741	14
	11.3	Switchgear & Motor Control	5,688	0	967	0	6,654	9.3%	616	0%	0	10.0%	727	7,997	15
	11.4	Conduit & Cable Tray	0	3,566	12,329	0	15,895	9.6%	1,521	0%	0	15.0%	2,612	20,029	36
	11.5	Wire & Cable	0	6,728	12,989	0	19,717	8.4%	1,661	0%	0	15.0%	3,207	24,585	45
	11.6	Protective Equipment	260	0	885	0	1,146	9.8%	112	0%	0	10.0%	126	1,383	3
	11.7	Standby Equipment	1,340	0	31	0	1,370	9.5%	130	0%	0	10.0%	150	1,650	3
	11.8	Main Power Transformers	7,680	0	129	0	7,809	7.6%	593	0%	0	10.0%	840	9,243	17
	11.9	Electrical Foundations	0	334	819	0	1,152	9.5%	110	0%	0	20.0%	252	1,514	3
		SUBTOTAL 11.	**$21,610**	**$10,628**	**$30,050**	**$0**	**$62,288**		**$5,554**		**$0**		**$8,616**	**$76,459**	**$139**
12		INSTRUMENTATION & CONTROL													
	12.1	PC Control Equipment	w/12.7	0	w/12.7	0	0	0%	0	0%	0	0.0%	0	0	0
	12.2	Combustion Turbine Control	N/A	0	N/A	0	0	0%	0	0%	0	0.0%	0	0	0
	12.3	Steam Turbine Control	w/8.1	0	w/8.1	0	0	0%	0	0%	0	0.0%	0	0	0
	12.4	Other Major Component Control	0	0	0	0	0	0%	0	0%	0	0.0%	0	0	0
	12.5	Signal Processing Equipment	W/12.7	0	w/12.7	0	0	0%	0	0%	0	0.0%	0	0	0
	12.6	Control Boards, Panels & Racks	516	0	309	0	826	9.6%	79	0%	0	15.0%	136	1,041	2
	12.7	Computer Accessories	5,213	0	911	0	6,124	9.5%	583	0%	0	10.0%	671	7,378	13
	12.8	Instrument Wiring & Tubing	2,826	0	5,606	0	8,432	8.5%	718	0%	0	15.0%	1,372	10,522	19
	12.9	Other I & C Equipment	1,473	0	3,343	0	4,816	9.7%	469	0%	0	10.0%	528	5,813	11
		SUBTOTAL 12.	**$10,028**	**$0**	**$10,169**	**$0**	**$20,197**		**$1,850**		**$0**		**$2,707**	**$24,755**	**$45**
13		IMPROVEMENTS TO SITE													
	13.1	Site Preparation	0	56	1,118	0	1,174	9.9%	116	0%	0	20.0%	258	1,547	3
	13.2	Site Improvements	0	1,856	2,305	0	4,161	9.8%	409	0%	0	20.0%	914	5,483	10
	13.3	Site Facilities	3,326	0	3,280	0	6,605	9.8%	648	0%	0	20.0%	1,451	8,704	16
		SUBTOTAL 13.	**$3,326**	**$1,912**	**$6,702**	**$0**	**$11,940**		**$1,173**		**$0**		**$2,623**	**$15,735**	**$29**

Exhibit 3-68 Case 1F (95%) Capital Costs (continued)

Department:	NETL Office of Systems Analysis and Planning			**Cost Base:**	Jun 2007
Project:	CO2 Capture Sensitivity Systems Analysis			**Prepared:**	27-May-11
Case:	Case 1F - Supercritical PC w/ 95% CO2 Capture				**x $1, 000**
Plant Size:	549.96 MW, net	Capital Charge Factor 0.1773	Capacity Factor 0.85		

Acct No.	Item/Description	Equipment Cost	Material Cost	Labor Direct	Labor Indirect	Bare Erected	Eng'g CM H.O. & %	Eng'g CM H.O. & Total	Process Cont. %	Process Cont. Total	Project Cont. %	Project Cont. Total	TOTAL PLANT COST $	TOTAL PLANT COST $/kW
14	BUILDINGS & STRUCTURES													
14.1	Boiler Building	0	8,850	7,783	0	16,632	9.0%	1,494	0%	0	15.0%	2,719	20,845	38
14.2	Turbine Building	0	12,809	11,938	0	24,748	9.0%	2,228	0%	0	15.0%	4,046	31,022	56
14.3	Administration Building	0	644	681	0	1,324	9.1%	120	0%	0	15.0%	217	1,661	3
14.4	Circulation Water Pumphouse	0	152	120	0	272	8.9%	24	0%	0	15.0%	44	341	1
14.5	Water Treatment Buildings	0	852	777	0	1,630	9.0%	146	0%	0	15.0%	266	2,042	4
14.6	Machine Shop	0	431	289	0	720	8.9%	64	0%	0	15.0%	118	901	2
14.7	Warehouse	0	292	293	0	584	9.0%	53	0%	0	15.0%	96	733	1
14.8	Other Buildings & Structures	0	238	203	0	441	9.0%	40	0%	0	15.0%	72	553	1
14.9	Waste Treating Building & Str.	0	454	1,379	0	1,833	9.4%	173	0%	0	15.0%	301	2,307	4
	SUBTOTAL 14.	**$0**	**$24,722**	**$23,463**	**$0**	**$48,185**		**$4,342**		**$0**		**$7,879**	**$60,405**	**$110**
	Total Cost	**$790,324**	**$54,263**	**$385,976**	**$0**	**$1,230,563**		**$115,703**		**$56,058**		**$200,065**	**$1,602,389**	**$2,914**

Owner's Costs		
Preproduction Costs		
6 Months All Labor	$10,558	$19
1 Month Maintenance Materials	$1,538	$3
1 Month Non-fuel Consumables	$1,412	$3
1 Month Waste Disposal	$336	$1
25% of 1 Months Fuel Cost at 100% CF	$2,037	$4
2% of TPC	$32,048	$58
Total	$47,930	$87
Inventory Capital		
60 day supply of fuel and consumables at 100% CF	$19,120	$35
0.5% of TPC (spare parts)	$8,012	$15
Total	$27,132	$49
Initial Cost for Catalyst and Chemicals	$2,683	$5
Land	$900	$2
Other Owner's Costs	$240,358	$437
Financing Costs	$43,265	$79
Total Overnight Costs (TOC)	**$1,964,657**	**$3,572.4**
TASC Multiplier (IOU, high risk, 35 year)	1.140	
Total As-Spent Cost (TASC)	**$2,239,708**	**$4,072**

Exhibit 3-69 Case 1F Initial and Annual O&M Expenses

INITIAL & ANNUAL O&M EXPENSES			
Case:	Case 1F - Supercritical PC w/ 95% CO2 Capture		
Plant Size (MWe):	549.96	**Heat Rate (Btu/kWh):**	12,400
Primary/Secondary Fuel:	Illinois #6 Bituminous Coal	**Fuel Cost ($/MM Btu):**	1.64
Design/Construction	5 years	**Book Life (yrs):**	30
TPC (Plant Cost) Year:	Jun 2007	**TPI Year:**	2015
Capacity Factor (%):	85	**CO_2 Captured (TPD):**	15824

OPERATING & MAINTENANCE LABOR

Operating Labor

Operating Labor Rate (base):	$34.65	$/hour
Operating Labor Burden:	30.00	% of base
Labor Overhead Charge:	25.00	% of labor

Operating Labor Requirements per Shift:	units/mod.	Total Plant
Skilled Operator	2.0	2.0
Operator	11.3	11.3
Foreman	1.0	1.0
Lab Tech's etc.	2.0	2.0
TOTAL Operating Jobs	16.3	16.3

	Annual Costs $	Annual Costs $/kW-net
Annual Operating Labor Cost (calc'd)	6,431,885	11.70
Maintenance Labor Cost (calc'd)	10,461,480	19.02
Administrative & Support Labor (calc'd)	4,223,341	7.68
Property Taxes & Insurance	$32,047,789	$58.273
TOTAL FIXED OPERATING COSTS	**$53,164,496**	**$96.670**

VARIABLE OPERATING COSTS

	$	$/kWh-net
Maintenance Material Costs (calc'd)	**$15,692,221**	**0.00383**

Consumables	Consumption Initial	Consumption /Day	Unit Cost	Initial Cost	$	$/kWh-net
Water (/1000 gallons)	0	8,328	1.08	$0	$2,790,368	0.00068
Chemicals						
MU & WT Chem. (lb)	0	40,311	0.17	$0	$2,126,129	0.00052
Limestone (ton)	0	710	21.63	$0	$4,765,707	0.00116
Carbon (Hg Removal) (lb)	0	0	1.05	$0	$0	0.00000
MEA Solvent (ton)	1,105	1.59	2249.89	$2,485,693	$1,109,014	0.00027
Caustic Soda, NaOH (ton)	78	7.81	433.68	$33,856	$1,050,384	0.00026
Sulfuric acid, H_2SO_4 (ton)	74	7.45	138.78	$10,338	$320,744	0.00008
Corrosion Inhibitor	0	0	0.00	$152,815	$7,380	0.00000
Activated C, MEA (lb)	0	1,872	1.05	$0	$609,731	0.00015
Ammonia, 28% soln (ton)	0	22	129.80	$0	$867,053	0.00021
Subtotal Chemicals				**$2,682,703**	**$10,856,142**	**0.00265**
Other						
Supplemental Fuel (MMBtu)	0	0	0.00	$0	$0	0.00000
SCR Catalyst Replacement	w/equip.	0.42	5,775.94	$0	$759,439	0.00019
Emission Penalties	0	0	0.00	$0	$0	0.00000
Subtotal Other				**$0**	**$759,439**	**0.00019**
Waste Disposal						
Spent Mercury Catalyst (lb)	0	0	0.31	$0	$0	0.00000
Flyash (ton)	0	544	16.23	$0	$2,740,142	0.00067
Bottom Ash (ton)	0	136	16.23	$0	$685,035	0.00017
Subtotal Solid Waste Disposal				**$0**	**$3,425,177**	**0.00084**
By-products & Emissions						
Gypsum (tons)	0	0	0.00	$0	$0	0.00000
Sulfur (tons)	0	0	0.00	$0	$0	0.00000
Subtotal By-Products				**$0**	**$0**	**0.00000**
TOTAL VARIABLE OPERATING COSTS					**$33,523,348**	**0.00819**
Coal FUEL (tons)	**210,448**	**7,015**	**38.19**	**$8,035,996**	**$83,105,597**	**0.02029**

Exhibit 3-70 Case 1G (99%) Capital Costs

Department:	NETL Office of Systems Analysis and Planning			**Cost Base:**	Jun 2007
Project:	CO2 Capture Sensitivity Systems Analysis			**Prepared:**	14-Jun-10
Case:	Case 1G - Supercritical PC w/ 99% CO2 Capture				**x $1, 000**
Plant Size:	549.97 MW, net	Capital Charge Factor 0.1773	Capacity Factor 0.85		

Acct No.	Item/Description	Equipment Cost	Material Cost	Labor Direct	Labor Indirect	Bare Erected	Eng'g CM H.O. & %	Eng'g CM H.O. & Total	Process Cont. %	Process Cont. Total	Project Cont. %	Project Cont. Total	TOTAL PLANT COST $	TOTAL PLANT COST $/kW
1	COAL HANDLING SYSTEM													
1.1	Coal Receive & Unload	4,263	0	1,947	0	6,210	8.9%	555	0%	0	15.0%	1,015	7,779	14
1.2	Coal Stackout & Reclaim	5,509	0	1,248	0	6,758	8.8%	592	0%	0	15.0%	1,102	8,451	15
1.3	Coal Conveyors & Yd Crus	5,122	0	1,235	0	6,357	8.8%	557	0%	0	15.0%	1,037	7,952	14
1.4	Other Coal Handling	1,340	0	286	0	1,626	8.7%	142	0%	0	15.0%	265	2,033	4
1.5	Sorbent Receive & Unload	176	0	53	0	229	8.8%	20	0%	0	15.0%	37	287	1
1.6	Sorbent Stackout & Reclaim	2,841	0	521	0	3,362	8.7%	293	0%	0	15.0%	548	4,203	8
1.7	Sorbent Conveyors	1,014	219	249	0	1,482	8.7%	128	0%	0	15.0%	242	1,852	3
1.8	Other Sorbent Handling	612	144	321	0	1,077	8.8%	95	0%	0	15.0%	176	1,348	2
1.9	Coal & Sorbent Hnd.Foundations	0	5,242	6,612	0	11,854	9.3%	1,108	0%	0	15.0%	1,944	14,906	27
	SUBTOTAL 1.	**$20,878**	**$5,604**	**$12,472**	**$0**	**$38,954**		**$3,490**		**$0**		**$6,367**	**$48,811**	**$89**
2	COAL PREP & FEED SYSTEMS													
2.1	Coal Crushing & Drying	2,479	0	483	0	2,962	8.7%	258	0%	0	15.0%	483	3,704	7
2.2	Prepared Coal Storage & Feed	6,347	0	1,385	0	7,733	8.7%	676	0%	0	15.0%	1,261	9,670	18
2.3	Slurry Prep & Feed	0	0	0	0	0	0.0%	0	0%	0	0.0%	0	0	0
2.4	Misc. Coal Prep & Feed	0	0	0	0	0	0.0%	0	0%	0	0.0%	0	0	0
2.5	Sorbent Prep Equipment	4,846	209	1,006	0	6,061	8.7%	528	0%	0	15.0%	988	7,578	14
2.6	Sorbent Storage & Feed	584	0	224	0	807	8.9%	72	0%	0	15.0%	132	1,011	2
2.7	Sorbent Injection System	0	0	0	0	0	0.0%	0	0%	0	0.0%	0	0	0
2.8	Booster Air Supply System	0	0	0	0	0	0.0%	0	0%	0	0.0%	0	0	0
2.9	Coal & Sorbent Feed Foundation	0	619	520	0	1,139	9.2%	105	0%	0	15.0%	187	1,430	3
	SUBTOTAL 2.	**$14,256**	**$828**	**$3,618**	**$0**	**$18,702**		**$1,639**		**$0**		**$3,051**	**$23,393**	**$43**
3	FEEDWATER & MISC. BOP SYSTEMS													
3.1	Feedwater System	23,175	0	7,486	0	30,661	8.8%	2,685	0%	0	15.0%	5,002	38,347	70
3.2	Water Makeup & Pretreating	7,202	0	2,318	0	9,520	9.4%	892	0%	0	20.0%	2,083	12,495	23
3.3	Other Feedwater Subsystems	7,095	0	2,998	0	10,093	8.9%	900	0%	0	15.0%	1,649	12,642	23
3.4	Service Water Systems	1,412	0	768	0	2,180	9.3%	202	0%	0	20.0%	476	2,859	5
3.5	Other Boiler Plant Systems	8,989	0	8,875	0	17,863	9.4%	1,676	0%	0	15.0%	2,931	22,470	41
3.6	FO Supply Sys & Nat Gas	280	0	350	0	630	9.3%	59	0%	0	15.0%	103	792	1
3.7	Waste Treatment Equipment	4,817	0	2,746	0	7,563	9.7%	733	0%	0	20.0%	1,659	9,954	18
3.8	Misc. Power Plant Equipment	2,975	0	909	0	3,883	9.6%	373	0%	0	20.0%	851	5,108	9
	SUBTOTAL 3.	**$55,944**	**$0**	**$26,450**	**$0**	**$82,394**		**$7,519**		**$0**		**$14,754**	**$104,667**	**$190**
4	PC BOILER & ACCESSORIES													
4.1	PC Boiler	198,367	0	111,304	0	309,671	9.7%	29,995	0.0%	0	10.0%	33,967	373,632	679
4.2	SCR (w/4.1)	0	0	0	0	0	0%	0	0%	0	0.0%	0	0	0
4.3	Open	0	0	0	0	0	0%	0	0%	0	0.0%	0	0	0
4.4	Boiler BoP (w/ID Fans)	0	0	0	0	0	0%	0	0%	0	0.0%	0	0	0
4.5	Primary Air System	w/4.1	0	w/4.1	0	0	0%	0	0%	0	0.0%	0	0	0
4.6	Secondary Air System	w/4.1	0	w/4.1	0	0	0%	0	0%	0	0.0%	0	0	0
4.7	Major Component Rigging	0	w/4.1	w/4.1	0	0	0%	0	0%	0	0.0%	0	0	0
4.8	PC Foundations	0	w/14.1	w/14.1	0	0	0%	0	0%	0	0.0%	0	0	0
	SUBTOTAL 4.	**$198,367**	**$0**	**$111,304**	**$0**	**$309,671**		**$29,995**		**$0**		**$33,967**	**$373,632**	**$679**

Exhibit 3-70 Case 1G (99%) Capital Costs (continued)

		Department:	NETL Office of Systems Analysis and Planning									**Cost Base:**	Jun 2007	
		Project:	CO2 Capture Sensitivity Systems Analysis									**Prepared:**	14-Jun-10	
		Case:	Case 1G - Supercritical PC w/ 99% CO2 Capture										**x $1, 000**	
		Plant Size:	549.97	MW, net		Capital Charge Factor	0.1773	Capacity Factor	0.85					
			Equipment	**Material**	**Labor**		**Bare**	**Eng'g CM H.O. &**		**Process Cont.**		**Project Cont.**		**TOTAL PLANT COST**	
Acct No.		**Item/Description**	**Cost**	**Cost**	**Direct**	**Indirect**	**Erected**	**%**	**Total**	**%**	**Total**	**%**	**Total**	**$**	**$/kW**
5A		FLUE GAS CLEANUP							*						
	5.1	Absorber Vessels & Accessories	85,658	0	18,440	0	104,098	9.5%	9,852	0%	0	10.0%	11,395	125,346	228
	5.2	Other FGD	4,473	0	5,069	0	9,542	9.6%	919	0%	0	10.0%	1,046	11,508	21
	5.3	Bag House & Accessories	21,859	0	13,872	0	35,731	9.6%	3,418	0%	0	10.0%	3,915	43,064	78
	5.4	Other Particulate Removal Materials	1,427	0	1,527	0	2,954	9.6%	284	0%	0	10.0%	324	3,562	6
	5.5	Gypsum Dewatering System	5,682	0	965	0	6,647	9.4%	628	0%	0	10.0%	728	8,003	15
	5.6	Mercury Removal System	0	0	0	0	0	0.0%	0	0%	0	0.0%	0	0	0
	5.7	Open	0	0	0	0	0	0.0%	0	0%	0	0.0%	0	0	0
	5.8	Open	0	0	0	0	0	0.0%	0	0%	0	0.0%	0	0	0
	5.9	Open	0	0	0	0	0	0.0%	0	0%	0	0.0%	0	0	0
		SUBTOTAL 5A.	**$119,099**	**$0**	**$39,874**	**$0**	**$158,973**		**$15,102**		**$0**		**$17,407**	**$191,482**	**$348**
5B		CO2 REMOVAL & COMPRESSION													
	5B.1	CO2 Removal System	229,196	0	69,402	0	298,598	9.5%	28,339	20%	59,720	20.0%	77,331	463,988	844
	5B.2	CO2 Compression & Drying	30,626	0	9,565	0	40,192	9.5%	3,816	0%	0	20.0%	8,801	52,809	96
	5B.3	CO2 Pipeline											0	0	0
	5B.4	CO2 Storage											0	0	0
	5B.5	CO2 Monitoring											0	0	0
		SUBTOTAL 5B.	**$259,822**	**$0**	**$78,967**	**$0**	**$338,790**		**$32,155**		**$59,720**		**$86,133**	**$516,797**	**$940**
6		COMBUSTION TURBINE/ACCESSORIES													
	6.1	Combustion Turbine Generator	0	0	0	0	0	10%	0	0%	0	0.0%	0	0	0
	6.2	Combustion Turbine Accessories	0	0	0	0	0	10%	0	0%	0	0.0%	0	0	0
	6.3	Compressed Air Piping	0	0	0	0	0	10%	0	0%	0	0.0%	0	0	0
	6.4	Combustion Turbine Foundations	0	0	0	0	0	10%	0	0%	0	0.0%	0	0	0
		SUBTOTAL 6.	**$0**	**$0**	**$0**	**$0**	**$0**		**$0**		**$0**		**$0**	**$0**	**$0**
7		HRSG, DUCTING & STACK													
	7.1	Flue Gas Recycle Heat Exchanger	N/A	0	N/A	0	0	0%	0	0%	0	0.0%	0	0	0
	7.2	SCR System	0	0	0	0	0	0%	0	0%	0	0.0%	0	0	0
	7.3	Ductwork	9,815	0	6,306	0	16,121	8.7%	1,408	0%	0	15.0%	2,629	20,158	37
	7.4	Stack	8,763	0	5,128	0	13,891	9.6%	1,327	0%	0	10.0%	1,522	16,740	30
	7.9	HRSG, Duct & Stack Foundations	0	1,032	1,173	0	2,205	9.3%	205	0%	0	20.0%	482	2,892	5
		SUBTOTAL 7.	**$18,578**	**$1,032**	**$12,606**	**$0**	**$32,216**		**$2,941**		**$0**		**$4,633**	**$39,790**	**$72**
8		STEAM TURBINE GENERATOR													
	8.1	Steam TG & Accessories	56,173	0	7,454	0	63,627	9.6%	6,092	0%	0	10.0%	6,972	76,691	139
	8.2	Turbine Plant Auxiliaries	378	0	810	0	1,189	9.7%	115	0%	0	10.0%	130	1,434	3
	8.3	Condenser & Auxiliaries	4,179	0	1,557	0	5,735	9.5%	545	0%	0	10.0%	628	6,908	13
	8.4	Steam Piping	20,055	0	9,889	0	29,944	8.3%	2,499	0%	0	15.0%	4,866	37,309	68
	8.9	TG Foundations	0	1,187	1,876	0	3,063	9.4%	288	0%	0	20.0%	670	4,021	7
		SUBTOTAL 8.	**$80,785**	**$1,187**	**$21,585**	**$0**	**$103,557**		**$9,540**		**$0**		**$13,267**	**$126,364**	**$230**
9		COOLING WATER SYSTEM													
	9.1	Cooling Towers	15,389	0	4,792	0	20,181	9.5%	1,916	0%	0	10.0%	2,210	24,306	44
	9.2	Circulating Water Pumps	2,830	0	217	0	3,047	8.6%	261	0%	0	10.0%	331	3,638	7
	9.3	Circ. Water System Auxiliaries	714	0	95	0	809	9.4%	76	0%	0	10.0%	89	974	2
	9.4	Circ. Water Piping	0	5,659	5,485	0	11,144	9.2%	1,027	0%	0	15.0%	1,826	13,996	25
	9.5	Make-up Water System	657	0	878	0	1,535	9.5%	145	0%	0	15.0%	252	1,932	4
	9.6	Component Cooling Water System	566	0	450	0	1,015	9.4%	95	0%	0	15.0%	167	1,277	2
	9.9	Circ. Water System Foundations	0	3,380	5,371	0	8,751	9.4%	824	0%	0	20.0%	1,915	11,490	21
		SUBTOTAL 9.	**$20,155**	**$9,040**	**$17,287**	**$0**	**$46,482**		**$4,344**		**$0**		**$6,788**	**$57,614**	**$105**

Exhibit 3-70 Case 1G (99%) Capital Costs (continued)

Department:	NETL Office of Systems Analysis and Planning			**Cost Base:**	Jun 2007
Project:	CO2 Capture Sensitivity Systems Analysis			**Prepared:**	14-Jun-10
Case:	Case 1G - Supercritical PC w/ 99% CO2 Capture				**x $1, 000**
Plant Size:	549.97 MW, net	Capital Charge Factor 0.1773	Capacity Factor 0.85		

Acct No.	Item/Description	Equipment Cost	Material Cost	Labor Direct	Labor Indirect	Bare Erected	Eng'g CM H.O. & %	Eng'g CM H.O. & Total	Process Cont. %	Process Cont. Total	Project Cont. %	Project Cont. Total	TOTAL PLANT COST $	TOTAL PLANT COST $/kW
10	ASH/SPENT SORBENT HANDLING SYS													
10.1	Ash Coolers	N/A	0	N/A	0	0	0%	0	0%	0	0.0%	0	0	0
10.2	Cyclone Ash Letdown	N/A	0	N/A	0	0	0%	0	0%	0	0.0%	0	0	0
10.3	HGCU Ash Letdown	N/A	0	N/A	0	0	0%	0	0%	0	0.0%	0	0	0
10.4	High Temperature Ash Piping	N/A	0	N/A	0	0	0%	0	0%	0	0.0%	0	0	0
10.5	Other Ash Recovery Equipment	N/A	0	N/A	0	0	0%	0	0%	0	0.0%	0	0	0
10.6	Ash Storage Silos	728	0	2,243	0	2,971	9.7%	289	0%	0	10.0%	326	3,586	7
10.7	Ash Transport & Feed Equipment	4,713	0	4,827	0	9,540	9.5%	902	0%	0	10.0%	1,044	11,486	21
10.8	Misc. Ash Handling Equipment	0	0	0	0	0	0.0%	0	0%	0	0.0%	0	0	0
10.9	Ash/Spent Sorbent Foundation	0	173	204	0	377	9.3%	35	0%	0	20.0%	82	494	1
	SUBTOTAL 10.	**$5,441**	**$173**	**$7,274**	**$0**	**$12,888**		**$1,227**		**$0**		**$1,453**	**$15,567**	**$28**
11	ACCESSORY ELECTRIC PLANT													
11.1	Generator Equipment	1,712	0	278	0	1,990	9.3%	184	0%	0	7.5%	163	2,338	4
11.2	Station Service Equipment	5,153	0	1,693	0	6,847	9.6%	655	0%	0	7.5%	563	8,064	15
11.3	Switchgear & Motor Control	5,925	0	1,007	0	6,932	9.3%	642	0%	0	10.0%	757	8,331	15
11.4	Conduit & Cable Tray	0	3,715	12,844	0	16,558	9.6%	1,585	0%	0	15.0%	2,721	20,865	38
11.5	Wire & Cable	0	7,009	13,531	0	20,540	8.4%	1,731	0%	0	15.0%	3,341	25,611	47
11.6	Protective Equipment	260	0	885	0	1,146	9.8%	112	0%	0	10.0%	126	1,383	3
11.7	Standby Equipment	1,350	0	31	0	1,381	9.5%	131	0%	0	10.0%	151	1,663	3
11.8	Main Power Transformers	7,725	0	130	0	7,856	7.6%	597	0%	0	10.0%	845	9,298	17
11.9	Electrical Foundations	0	338	828	0	1,166	9.5%	111	0%	0	20.0%	255	1,532	3
	SUBTOTAL 11.	**$22,127**	**$11,062**	**$31,227**	**$0**	**$64,416**		**$5,746**		**$0**		**$8,923**	**$79,085**	**$144**
12	INSTRUMENTATION & CONTROL													
12.1	PC Control Equipment	w/12.7	0	w/12.7	0	0	0%	0	0%	0	0.0%	0	0	0
12.2	Combustion Turbine Control	N/A	0	N/A	0	0	0%	0	0%	0	0.0%	0	0	0
12.3	Steam Turbine Control	w/8.1	0	w/8.1	0	0	0%	0	0%	0	0.0%	0	0	0
12.4	Other Major Component Control	0	0	0	0	0	0%	0	0%	0	0.0%	0	0	0
12.5	Signal Processing Equipment	W/12.7	0	w/12.7	0	0	0%	0	0%	0	0.0%	0	0	0
12.6	Control Boards, Panels & Racks	523	0	313	0	836	9.6%	80	0%	0	15.0%	137	1,053	2
12.7	Computer Accessories	5,276	0	922	0	6,199	9.5%	590	0%	0	10.0%	679	7,468	14
12.8	Instrument Wiring & Tubing	2,860	0	5,674	0	8,535	8.5%	727	0%	0	15.0%	1,389	10,651	19
12.9	Other I & C Equipment	1,491	0	3,383	0	4,874	9.7%	475	0%	0	10.0%	535	5,884	11
	SUBTOTAL 12.	**$10,150**	**$0**	**$10,293**	**$0**	**$20,443**		**$1,872**		**$0**		**$2,740**	**$25,056**	**$46**
13	IMPROVEMENTS TO SITE													
13.1	Site Preparation	0	57	1,129	0	1,185	9.9%	117	0%	0	20.0%	260	1,562	3
13.2	Site Improvements	0	1,874	2,327	0	4,201	9.8%	412	0%	0	20.0%	923	5,536	10
13.3	Site Facilities	3,358	0	3,311	0	6,669	9.8%	655	0%	0	20.0%	1,465	8,788	16
	SUBTOTAL 13.	**$3,358**	**$1,930**	**$6,767**	**$0**	**$12,054**		**$1,184**		**$0**		**$2,648**	**$15,886**	**$29**

Exhibit 3-70 Case 1G (99%) Capital Costs (continued)

Department:	NETL Office of Systems Analysis and Planning			**Cost Base:**	Jun 2007
Project:	CO2 Capture Sensitivity Systems Analysis			**Prepared:**	27-May-11
Case:	Case 1G - Supercritical PC w/ 99% CO2 Capture				**x $1, 000**
Plant Size:	549.97 MW, net	Capital Charge Factor 0.1773	Capacity Factor 0.85		

Acct No.	Item/Description	Equipment Cost	Material Cost	Labor Direct	Labor Indirect	Bare Erected	Eng'g CM H.O. & %	Eng'g CM H.O. & Total	Process Cont. %	Process Cont. Total	Project Cont. %	Project Cont. Total	TOTAL PLANT COST $	TOTAL PLANT COST $/kW
14	BUILDINGS & STRUCTURES													
14.1	Boiler Building	0	8,871	7,801	0	16,672	9.0%	1,497	0%	0	15.0%	2,725	20,895	38
14.2	Turbine Building	0	12,858	11,984	0	24,842	9.0%	2,237	0%	0	15.0%	4,062	31,141	57
14.3	Administration Building	0	647	684	0	1,331	9.1%	121	0%	0	15.0%	218	1,669	3
14.4	Circulation Water Pumphouse	0	161	128	0	289	8.9%	26	0%	0	15.0%	47	363	1
14.5	Water Treatment Buildings	0	911	831	0	1,742	9.0%	156	0%	0	15.0%	285	2,183	4
14.6	Machine Shop	0	433	291	0	723	8.9%	64	0%	0	15.0%	118	905	2
14.7	Warehouse	0	293	294	0	587	9.0%	53	0%	0	15.0%	96	736	1
14.8	Other Buildings & Structures	0	239	204	0	443	9.0%	40	0%	0	15.0%	72	556	1
14.9	Waste Treating Building & Str.	0	458	1,389	0	1,846	9.4%	174	0%	0	15.0%	303	2,324	4
	SUBTOTAL 14.	**$0**	**$24,871**	**$23,605**	**$0**	**$48,476**		**$4,368**		**$0**		**$7,927**	**$60,770**	**$110**
	Total Cost	**$828,959**	**$55,727**	**$403,330**	**$0**	**$1,288,016**		**$121,121**		**$59,720**		**$210,057**	**$1,678,914**	**$3,053**

Owner's Costs			
Preproduction Costs			
6 Months All Labor		$10,864	$20
1 Month Maintenance Materials		$1,610	$3
1 Month Non-fuel Consumables		$1,536	$3
1 Month Waste Disposal		$359	$1
25% of 1 Months Fuel Cost at 100% CF		$2,180	$4
2% of TPC		$33,578	$61
Total		$50,127	$91
Inventory Capital			
60 day supply of fuel and consumables at 100% CF		$20,509	$37
0.5% of TPC (spare parts)		$8,395	$15
Total		$28,903	$53
Initial Cost for Catalyst and Chemicals		$2,992	$5
Land		$900	$2
Other Owner's Costs		$251,837	$458
Financing Costs		$45,331	$82
Total Overnight Costs (TOC)		**$2,059,004**	**$3,743.8**
TASC Multiplier	(IOU, high risk, 35 year)	1.140	
Total As-Spent Cost (TASC)		**$2,347,264**	**$4,268**

Exhibit 3-71 Case 1G Initial and Annual O&M Expenses

INITIAL & ANNUAL O&M EXPENSES

Case:	Case 1G - Supercritical PC w/ 99% CO2 Capture		
Plant Size (MWe):	549.97	**Heat Rate (Btu/kWh):**	13,269
Primary/Secondary Fuel:	Illinois #6 Bituminous Coal	**Fuel Cost ($/MM Btu):**	1.64
Design/Construction	5 years	**Book Life (yrs):**	30
TPC (Plant Cost) Year:	Jun 2007	**TPI Year:**	2015
Capacity Factor (%):	85	**CO_2 Captured (TPD):**	17646

OPERATING & MAINTENANCE LABOR

Operating Labor

Operating Labor Rate (base):	$34.65	$/hour
Operating Labor Burden:	30.00	% of base
Labor Overhead Charge:	25.00	% of labor

Operating Labor Requirements per Shift:	units/mod.	Total Plant
Skilled Operator	2.0	2.0
Operator	11.3	11.3
Foreman	1.0	1.0
Lab Tech's etc.	2.0	2.0
TOTAL Operating Jobs	16.3	16.3

	Annual Costs $	Annual Costs $/kW-net
Annual Operating Labor Cost (calc'd)	6,431,885	11.69
Maintenance Labor Cost (calc'd)	10,949,911	19.91
Administrative & Support Labor (calc'd)	4,345,449	7.90
Property Taxes & Insurance	$33,578,281	$61.055
TOTAL FIXED OPERATING COSTS	**$55,305,527**	**$100.561**

VARIABLE OPERATING COSTS

	$	$/kWh-net
Maintenance Material Costs (calc'd)	**$16,424,867**	**0.00401**

Consumables	Consumption Initial	Consumption /Day	Unit Cost	Initial Cost	$	$/kWh-net
Water (/1000 gallons)	0	9,212	1.08	$0	$3,086,655	0.00075
Chemicals						
MU & WT Chem. (lb)	0	44,592	0.17	$0	$2,351,886	0.00057
Limestone (ton)	0	758	21.63	$0	$5,083,719	0.00124
Carbon (Hg Removal) (lb)	0	0	1.05	$0	$0	0.00000
MEA Solvent (ton)	1,232	1.77	2249.89	$2,771,955	$1,236,732	0.00030
Caustic Soda, NaOH (ton)	87	8.71	433.68	$37,755	$1,171,350	0.00029
Sulfuric acid, H_2SO_4 (ton)	83	8.31	138.78	$11,529	$357,683	0.00009
Corrosion Inhibitor	0	0	0.00	$170,414	$8,230	0.00000
Activated C, MEA (lb)	0	2,087	1.05	$0	$679,951	0.00017
Ammonia, 28% soln (ton)	0	23	129.80	$0	$927,839	0.00023
Subtotal Chemicals				**$2,991,654**	**$11,817,390**	**0.00289**
Other						
Supplemental Fuel (MMBtu)	0	0	0.00	$0	$0	0.00000
SCR Catalyst Replacement	w/equip.	0.42	5,775.94	$0	$759,439	0.00019
Emission Penalties	0	0	0.00	$0	$0	0.00000
Subtotal Other				**$0**	**$759,439**	**0.00019**
Waste Disposal						
Spent Mercury Catalyst (lb)	0	0	0.31	$0	$0	0.00000
Flyash (ton)	0	582	16.23	$0	$2,932,245	0.00072
Bottom Ash (ton)	0	146	16.23	$0	$733,061	0.00018
Subtotal Solid Waste Disposal				**$0**	**$3,665,306**	**0.00090**
By-products & Emissions						
Gypsum (tons)	0	0	0.00	$0	$0	0.00000
Sulfur (tons)	0	0	0.00	$0	$0	0.00000
Subtotal By-Products				**$0**	**$0**	**0.00000**
TOTAL VARIABLE OPERATING COSTS					**$35,753,658**	**0.00873**
Coal FUEL (tons)	**225,202**	**7,507**	**38.19**	**$8,599,376**	**$88,931,883**	**0.02172**

3.2.5 Supercritical PC Cost and Performance Summary

A summary of plant costs and performance for the SC PC cases is shown in Exhibit 3-72.

Exhibit 3-72 Cost and Performance Results for the Supercritical PC Cases

Case	0	1A	1B	1C	1D	1E	1F	1G
CO_2 Capture, %	0%	30%	50%	70%	85%	90%	95%	99%
Gross Power Output, MW_e	580.4	601.5	618.2	637.8	654.8	661.3	667.9	679.6
Net Power Output, MW_e	550.0	550.0	550.0	550.0	550.1	550.0	550.0	550.0
Net Plant Efficiency, % (HHV)	39.3	35.2	32.9	30.6	28.9	28.2	27.5	25.7
Net Plant Heat Rate, Btu/kWh (HHV)	8,687	9,695	10,379	11,151	11,819	12,083	12,400	13,269
Coal Flowrate (lb/hr)	409,550	457,066	489,316	525,764	557,283	569,672	584,578	625,561
Total CO_2 Captured, lb/MWh_{net}	NA	588	1,057	1,582	2,037	2,213	2,398	2,674
CO_2 Capture & Compression Cost, $x1000	NA	$190,138	$266,902	$336,794	$441,781	$463,389	$485,273	$516,797
Total Plant Cost, $x1000	$905,901	$1,138,688	$1,258,942	$1,378,696	$1,525,453	$1,562,889	$1,602,389	$1,678,914
Owner's Costs, $x1000	$207,800	$258,649	$285,448	$312,458	$344,744	$353,249	$362,267	$380,090
Total Overnight Cost, $x1000	$1,113,701	$1,397,338	$1,544,390	$1,691,155	$1,870,197	$1,916,138	$1,964,657	$2,059,004
Total Overnight Cost, $/kW	$2,025	$2,541	$2,808	$3,075	$3,400	$3,484	$3,572	$3,744
Total As-Spent Capital, $x1000	$1,262,937	$1,592,965	$1,760,604	$1,927,917	$2,132,024	$2,184,397	$2,239,708	$2,347,264
Total As-Spent Capital, $/kW	$2,296	$2,896	$3,201	$3,505	$3,876	$3,972	$4,072	$4,268
CO_2 Capital Cost Penalty[a], $/kW	NA	$516	$783	$1,050	$1,375	$1,459	$1,548	$1,719
Cost of Electricity[b], mills/kWh	58.90	76.64	84.38	92.75	101.49	104.29	107.00	112.65
COE CO_2 Penalty[a], mills/kWh	NA	17.7	25.5	33.8	42.6	45.4	48.1	53.8
Percent increase in COE[a], %	NA	30.1	43.3	57.5	72.3	77.1	81.7	91.3
Cost of CO_2 Avoided[a], $/tonne	NA	102.8	79.1	69.2	67.2	65.9	64.7	68.2
CO_2 Emissions, lb/MMBtu	203.2	142.9	101.7	61.7	31.2	20.4	10.2	2.0
CO_2 Emissions, lb/MWh_{net}	1,765	1,385	1,055	687	369	246	126	27
SO_2 Emissions, lb/MMBtu	0.086	0.064	0.050	0.036	0.017	0.017	0.016	0.016
SO_2 Emissions, lb/MWh	0.75	0.570	0.460	0.340	0.170	0.170	0.170	0.170
NOx Emissions, lb/MMBtu	0.070	0.070	0.070	0.070	0.070	0.070	0.070	0.070
NOx Emissions, lb/MWh	0.608	0.621	0.646	0.673	0.695	0.703	0.715	0.752
PM Emissions, lb/MMBtu	0.013	0.013	0.013	0.013	0.013	0.013	0.013	0.013
PM Emissions, lb/MWh	0.113	0.115	0.120	0.125	0.129	0.131	0.133	0.140
Hg Emissions, lb/TBtu	1.14	1.14	1.14	1.14	1.14	1.14	1.14	1.14
Hg Emissions, lb/TWh	9.93	10.1	10.6	11.0	11.3	11.5	11.7	12.3
Raw Water Withdrawal, gpm	5,394	6,245	6,987	8,386	9,615	10,095	10,512	11,664
Raw Water Consumption, gpm	4,301	4,898	5,433	6,474	7,392	7,753	8,074	8,961
Raw Water Consumption, gal/MWh_{net}	469	534	593	706	806	846	881	978

a Relative to Case 0 (SC PC without capture from *2010 Bituminous Baseline* study)
b Capacity factor is 85% for the SC PC cases

This page intentionally left blank

4. Case 2 – GEE IGCC with Variable CO_2 Capture

This section evaluates a range of CO_2 capture levels for four IGCC plant designs, which are based on the GEE gasifier in the "radiant only" configuration. GEE offers three design configurations [44]:

- Quench: In this configuration, the hot syngas exiting the gasifier passes through a pool of water to quench the temperature to less than 260 °C (500 °F) before entering the syngas scrubber. It is the simplest and lowest capital cost design, but also the least efficient.

- Radiant-Only: In this configuration, the hot syngas exiting the gasifier passes through a radiant syngas cooler where it is cooled from about 1,316 °C (2,400 °F) to 677 °C (1,250 °F), then through a water quench where the syngas is further cooled to about 223 °C (450 °F) prior to entering the syngas scrubber. Relative to the quench configuration, the radiant-only design offers increased output, higher efficiency, improved reliability/availability, and results in the lowest COE. This configuration was chosen by GEE and Bechtel for the design of their reference plant.

- Radiant-Convective: In this configuration, the hot syngas exiting the gasifier passes through a radiant syngas cooler where it is cooled from about 1,316 °C (2,400 °F) to 760 °C (1,400 °F), passes over a pool of water where particulate is removed but the syngas is not quenched, through a convective syngas cooler where the syngas is further cooled to about 371 °C (700 °F) prior to entering additional heat exchangers or the scrubber. This configuration has the highest overall efficiency, but at the expense of highest capital cost and the lowest availability. This is the configuration used at Tampa Electric's Polk Power Station.

Note that the radiant-only configuration includes a water quench and, based on functionality, would be more appropriately named radiant-quench. The term radiant-only is used to distinguish it from the radiant-convective configuration. Since radiant-only is the terminology used by GEE, it will be used throughout this report.

The balance of Section 4 is organized as follows:

- Gasifier Background provides information on the development and status of the GEE gasification technology.

- Process Description provides an overview of the technology operation for IGCC Designs 2 through 4, which include WGS reactor(s) and a two-stage Selexol™ unit.

- Performance Results provides the main modeling results from Designs 1–4 including the performance summary, environmental performance, carbon balance, sulfur balance, water balance, mass and energy balance diagrams, mass and energy balance tables.

- Equipment List provides an itemized list of major equipment for Designs 1–4 with account codes that correspond to the cost accounts in the Cost Estimates section.

- Cost Estimates details the capital and O&M costs for IGCC Designs 1–4

4.1 Gasifier Background

Development and Current Status [45] – Initial development of the GEE gasification technology (formerly licensed by Texaco and then ChevronTexaco) was conducted in the 1940s at Texaco's Montebello, California laboratories. From 1946 to 1954 the Montebello pilot plant produced synthesis gas (hydrogen and carbon monoxide) by partial oxidation of a variety of feedstocks, including natural gas, oil, asphalt, coal tar, and coal. From 1956 to 1958, coal was gasified in a 91 tonne/day (100 TPD) Texaco coal gasifier at the Olin Mathieson Chemical Plant in Morgantown, West Virginia, for the production of ammonia.

The oil price increases and supply disruptions of the 1970s renewed interest in the Texaco partial-oxidation process for gasification of coal or other solid opportunity fuels. Three 14 tonne/day (15 TPD) pilot plants at the Montebello laboratories have been used to test numerous coals. Two larger pilot plants were also built. The first gasified 150 tonne/day (165 TPD) of coal and was built to test synthesis gas generation by Rührchemie and Rührkohle at Oberhausen, Germany, and included a synthesis gas cooler. The second gasified 172 tonne/day (190 TPD) of coal using a quench-only gasifier cooler and was built to make hydrogen at an existing TVA ammonia plant at Muscle Shoals, Alabama. These two large-scale pilot plants successfully operated for several years during the 1980s and tested a number of process variables and numerous coals.

The first commercial Texaco coal gasification plant was built for Tennessee Eastman at Kingsport, Tennessee, and started up in 1983. To date, 24 gasifiers have been built in 12 plants for coal and petroleum coke. Several of the plants require a hydrogen-rich gas and therefore directly water-quench the raw gas to add the water for shifting the CO to H_2, and have no synthesis gas coolers.

The Cool Water plant was the first commercial-scale Texaco coal gasification project for the electric utility industry. This facility gasified 907 tonne/day (1,000 TPD) (dry basis) of bituminous coal and generated 120 MW of electricity by IGCC operation. In addition, the plant was the first commercial-sized Texaco gasifier used with a synthesis gas cooler. The Cool Water plant operated from 1984 to 1989 and was a success in terms of operability, availability, and environmental performance.

The Tampa Electric IGCC Clean Coal Technology Demonstration Project built on the Cool Water experience to demonstrate the use of the Texaco coal gasification process in an IGCC plant. The plant utilizes approximately 2,268 tonne/day (2,500 TPD) of coal in a single Texaco gasifier to generate a net of approximately 250 MWe. The syngas is cooled in a high-temperature radiant heat exchanger, generating high-pressure steam, and further cooled in convective heat exchangers (the radiant-convective configuration). The particles in the cooled gas are removed in a water-based scrubber. The cleaned gas then enters a hydrolysis reactor where COS is converted to H_2S. After additional cooling, the syngas is sent to a conventional AGR unit, where H_2S is absorbed by reaction with an amine solvent. H_2S is removed from the amine by steam stripping and sent to a sulfuric acid plant. The cleaned gas is sent to a General Electric MS 7001FA combustion turbine (CT).

The Delaware Clean Energy Project is a coke gasification and CT repowering of an existing 130 MW coke-fired boiler cogeneration power plant at the Motiva oil refinery in Delaware City, Delaware. The Texaco coal gasification process was modified to gasify 1,814 tonne/day (2,000 TPD) of this low-quality petroleum coke. The plant is designed to use all the fluid petroleum coke generated at Motiva's Delaware City Plant and produce a nominal 238,136 kg/h (525,000 lb/h) of 8.6 MPa (1,250 psig) steam, and 120,656 kg/h (266,000 lb/h) of 1.2 MPa (175 psig) steam for export to the refinery and the use/sale of 120 MW of electrical power. Environmentally, these new facilities help satisfy tighter NO_x and SO_2 emission limitations at the Delaware City Plant.

Gasifier Capacity – The largest GEE gasifier is the unit at Tampa Electric, which consists of the radiant-convective configuration. The daily coal-handling capacity of this unit is 2,268 tonnes (2,500 tons) of bituminous coal. The dry gas production rate is 0.19 million Nm^3/h (6.7 million scfh) with an energy content of about 1,897 million kJ/h (HHV) (1,800 million Btu/h). This size matches the F Class CTs that are used at Tampa.

Distinguishing Characteristics – A key advantage of the GEE coal gasification technology is the extensive operating experience at full commercial scale. Furthermore, Tampa Electric is an IGCC power generation facility, operated by conventional electric utility staff, and is environmentally one of the cleanest coal-fired power plants in the world. The GEE gasifier also operates at the highest pressure of the three gasifiers in this study, 5.6 MPa (815 psia) compared to 4.2 MPa (615 psia) for CoP and Shell.

Entrained-flow gasifiers have fundamental environmental advantages over fluidized-bed and moving-bed gasifiers. They produce no hydrocarbon liquids, and the only solid waste is an inert slag. The relatively high H_2/CO ratio and CO_2 content of GEE gasification fuel gas helps achieve low nitrogen oxide (NO_x) and CO emissions in even the higher-temperature advanced CTs.

The key disadvantages of the GEE coal gasification technology are the limited refractory life, the relatively high oxygen requirements and high waste heat recovery duty (synthesis gas cooler design). As with the other entrained-flow slagging gasifiers, the GEE process has this disadvantage due to its high operating temperature. The disadvantage is magnified in the single-stage, slurry feed design. The quench design significantly reduces the capital cost of syngas cooling, while innovative heat integration maintains good overall thermal efficiency although lower than the synthesis gas cooler design. Another disadvantage of the GEE process is the limited ability to economically handle low-rank coals relative to moving-bed and fluidized-bed gasifiers or to entrained-flow gasifiers with dry feed. For slurry fed entrained gasifiers using low-rank coals, developers of two-stage slurry fed gasifiers claim advantages over single-stage slurry fed.

Important Coal Characteristics – The slurry feeding system and the recycle of process condensate water as the principal slurrying liquid make low levels of ash and soluble salts desirable coal characteristics for use in the GEE coal gasification process. High ash levels increase the ratio of water-to-carbon in the feed slurry, thereby increasing the oxygen requirements. The slurry feeding also favors the use of high-rank coals, such as bituminous coal,

since their low inherent moisture content increases the moisture-free solids content of the slurry and thereby reduces oxygen requirements.

4.2 Process Description

In this section the overall GEE gasification process is described. The system description follows the Designs 2 through 4 block flow diagrams.

4.2.1 Coal Receiving and Storage

The function of the Coal Receiving and Storage system is to unload, convey, prepare, and store the coal delivered to the plant. The scope of the system is from the trestle bottom dumper and coal receiving hoppers up to and including the slide gate valves at the outlet of the coal storage silos. Coal receiving and storage is identical for all four IGCC plant designs.

Operation Description – The coal is delivered to the site by 100-car unit trains comprised of 91 tonne (100 ton) rail cars. The unloading is done by a trestle bottom dumper, which unloads the coal into two receiving hoppers. Coal from each hopper is fed directly into a vibratory feeder. The 8 cm x 0 (3" x 0) coal from the feeder is discharged onto a belt conveyor. Two conveyors with an intermediate transfer tower are assumed to convey the coal to the coal stacker, which transfer the coal to either the long-term storage pile or to the reclaim area. The conveyor passes under a magnetic plate separator to remove tramp iron and then to the reclaim pile.

The reclaimer loads the coal into two vibratory feeders located in the reclaim hopper under the pile. The feeders transfer the coal onto a belt conveyor that transfers the coal to the coal surge bin located in the crusher tower. The coal is reduced in size to 3 cm x 0 (1¼" x 0) by the crusher. A conveyor then transfers the coal to a transfer tower. In the transfer tower the coal is routed to the tripper, which loads the coal into one of three silos. Two sampling systems are supplied: the as-received sampling system and the as-fired sampling system. Data from the analyses are used to support the reliable and efficient operation of the plant.

4.2.2 Coal Grinding and Slurry Preparation

Coal is fed onto a conveyor by vibratory feeders located below each silo. The conveyor feeds the coal to an inclined conveyor that delivers the coal to the rod mill feed hopper. The feed hopper provides a surge capacity of about two hours and contains two hopper outlets. Each hopper outlet discharges onto a weigh feeder, which in turn feeds a rod mill. Each rod mill is sized to process 55 percent of the coal feed requirements of the gasifier. The rod mill grinds the coal and wets it with treated slurry water transferred from the slurry water tank by the slurry water pumps. The coal slurry is discharged through a trommel screen into the rod mill discharge tank, and then the slurry is pumped to the slurry storage tanks. The dry solids concentration of the final slurry is 63 percent. The Polk Power Station operates at a slurry concentration of 62–68 percent using bituminous coal [46].

The coal grinding system is equipped with a dust suppression system consisting of water sprays aided by a wetting agent. The degree of dust suppression required depends on local

environmental regulations. All of the tanks are equipped with vertical agitators to keep the coal slurry solids suspended.

The equipment in the coal grinding and slurry preparation system is fabricated of materials appropriate for the abrasive environment present in the system. The tanks and agitators are rubber lined. The pumps are either rubber-lined or hardened metal to minimize erosion. Piping is fabricated of high-density polyethylene (HDPE).

4.2.3 Air Separation Unit (ASU) Choice and Integration

In order to economically and efficiently support IGCC projects, air separation equipment has been modified and improved in response to production requirements and the consistent need to increase single train output. "Elevated pressure" air separation designs have been implemented that result in distillation column operating pressures that are about twice as high as traditional plants. In this study, the main air compressor discharge pressure was set at 1.3 MPa (190 psia) compared to a traditional ASU plant operating pressure of about 0.7 MPa (105 psia) [47]. For IGCC designs the elevated pressure ASU process minimizes power consumption and decreases the size of some of the equipment items. When the air supply to the ASU is integrated with the gas turbine, the ASU operates at or near the supply pressure from the gas turbine's air compressor.

4.2.3.1 Residual Nitrogen Injection

The residual nitrogen that is available after gasifier oxygen and nitrogen requirements have been met is often compressed and sent to the gas turbine. Since all product streams are being compressed, the ASU air feed pressure is optimized to reduce the total power consumption and to provide a good match with available compressor frame sizes.

Increasing the diluent flow to the gas turbine by injecting residual nitrogen from the ASU can have a number of benefits, depending on the design of the gas turbine:

- Increased diluent increases mass flow through the turbine, thus increasing the power output of the gas turbine while maintaining optimum firing temperatures for syngas operation. This is particularly beneficial for locations where the ambient temperature and/or elevation are high and the gas turbine would normally operate at reduced output.
- By mixing with the syngas or by being injected directly into the combustor, the diluent nitrogen lowers the firing temperature (relative to natural gas) and reduces the formation of NOx.

In this study, the ASU nitrogen product was used as the primary diluent with a design target of reducing the syngas lower heating value (LHV) to 4.5-4.8 MJ/Nm^3 (120-128 Btu/scf). If the amount of available nitrogen was not sufficient to meet this target, additional dilution was provided through syngas humidification, and if still more dilution was required, the third option was steam injection.

4.2.3.2 Air Integration

Integration between the ASU and the CT can be practiced by extracting some, or all, of the ASU's air requirement from the gas turbine. Medium Btu syngas streams result in a higher mass flow than natural gas to provide the same heat content to the gas turbine. Some gas turbine designs may need to extract air to maintain stable compressor or turbine operation in response to increased fuel flow rates. Other gas turbines may balance air extraction against injection of all of the available nitrogen from the ASU. The amount of air extracted can also be varied as the ambient temperature changes at a given site to optimize year-round performance.

An important aspect of air-integrated designs is the need to efficiently recover the heat of compression contained in the air extracted from the gas turbine. Extraction air temperature is normally in the range of 399–454 °C (750–850 °F), and must be cooled to the last stage main air compressor discharge temperature prior to admission to the ASU. High-level recovery from the extracted air occurs by transferring heat to the gas turbine nitrogen diluents stream with a gas-to-gas heat exchanger.

4.2.3.3 Elevated Pressure ASU Experience in Gasification

The Buggenum, Netherlands unit built for Demkolec was the first elevated-pressure, fully integrated ASU to be constructed. It was designed to produce up to 1,796 tonnes/day (1,980 TPD) of 95 percent purity oxygen for a Shell coal-based gasification unit that fuels a Siemens V94.2 gas turbine. In normal operation at the Buggenum plant, the ASU receives all of its air supply from, and sends all residual nitrogen to, the gas turbine.

The Polk County, Florida, ASU for the Tampa Electric IGCC is also an elevated-pressure, 95 percent purity oxygen design that provides 1,832 tonnes/day (2,020 TPD) of oxygen to a GEE coal-based gasification unit, which fuels a General Electric 7FA gas turbine. All of the nitrogen produced in the ASU is used in the gas turbine. The original design did not allow for air extraction from the CT. After a CT air compressor failure in January 2005, a modification was made to allow air extraction which in turn eliminated a bottleneck in ASU capacity and increased overall power output [48].

4.2.3.4 ASU Basis

For this study, air integration is used for Design 1 only. For Designs 2 through 4, where higher CO_2 removal efficiencies are desired, all of the available combustion air is required to maintain mass flow through the turbine and hence maintain power output once the syngas is diluted to the target heating value.

The amount of air extracted from the gas turbine in Design 1 is determined through a process that includes the following constraints:

- The CT output must be maintained at 232 MW.
- The diluted syngas must meet heating value requirements specified by a CT vendor, which ranged from 4.5–4.8 MJ/Nm^3 (120–128 Btu/scf) (LHV).

For Design 1, about 4 percent of the pressurized CT air supply was extracted, which accounts for approximately 16.8 percent of the total ASU air requirement. It was not a goal of this project to optimize the integration of the CT and the ASU, although several recent papers have shown that providing 25-30 percent of the ASU air from the turbine compressor provides the best balance between maximizing plant output and efficiency without compromising plant availability or reliability [49, 50].

4.2.3.5 Air Separation Plant Process Description [51]

The ASU is designed to produce 95 mole percent O_2 for use in the gasifier. The plant is designed with two production trains, one for each gasifier. The air compressor is powered by an electric motor. Nitrogen is also recovered, compressed, and used as a diluent in the gas turbine combustor. A process schematic of a typical ASU is shown in Exhibit 4-1.

The air feed to the ASU is from one or two sources, depending on the plant design. The bulk of the air is supplied from a stand-alone compressor, while a portion is extracted from the compressor of the gas turbine in Design 1 only. Air to the stand-alone compressor is first filtered in a suction filter upstream of the compressor. This air filter removes particulate, which may tend to cause compressor wheel erosion and foul intercoolers. The filtered air is then compressed in the centrifugal compressor, with intercooling between each stage.

Air from the stand-alone compressor is combined with the extraction air in Design 1, and the combined stream is cooled and fed to an adsorbent-based pre-purifier system. The adsorbent removes water, CO_2, and C_4+ saturated hydrocarbons in the air. After passing through the adsorption beds, the air is filtered with a dust filter to remove any adsorbent fines that may be present. Downstream of the dust filter a small stream of air is withdrawn to supply the instrument air requirements of the ASU.

Regeneration of the adsorbent in the pre-purifiers is accomplished by passing a hot nitrogen stream through the off-stream bed(s) in a direction countercurrent to the normal airflow. The nitrogen is heated against extraction steam (1.7 MPa [250 psia]) in a shell and tube heat exchanger. The regeneration nitrogen drives off the adsorbed contaminants. Following regeneration, the heated bed is cooled to near normal operating temperature by passing a cool nitrogen stream through the adsorbent beds. The bed is re-pressurized with air and placed on stream so that the current on-stream bed(s) can be regenerated.

The air from the pre-purifier is then split into three streams. About 70 percent of the air is fed directly to the cold box. About 25 percent of the air is compressed in an air booster compressor. This boosted air is then cooled in an aftercooler against cooling water in the first stage and against chilled water in the second stage before it is fed to the cold box. The chiller utilizes low pressure process steam at 0.3 MPa (50 psia). The remaining 5 percent of the air is fed to a turbine-driven, single-stage, centrifugal booster compressor. This stream is cooled in a shell and tube aftercooler against cooling water before it is fed to the cold box.

All three air feeds are cooled in the cold box to cryogenic temperatures against returning product oxygen and nitrogen streams in plate-and-fin heat exchangers. The large air stream is fed directly to the first distillation column to begin the separation process. The second largest air

stream is liquefied against boiling liquid oxygen before it is fed to the distillation columns. The third, smallest air stream is fed to the cryogenic expander to produce refrigeration to sustain the cryogenic separation process.

Inside the cold box the air is separated into oxygen and nitrogen products. The oxygen product is withdrawn from the distillation columns as a liquid and is pressurized by a cryogenic pump. The pressurized liquid oxygen is then vaporized against the high-pressure air feed before being warmed to ambient temperature. The gaseous oxygen exits the cold box and is fed to the centrifugal compressor with intercooling between each stage of compression. The compressed oxygen is then fed to the gasification unit.

Nitrogen is produced from the cold box at two pressure levels. Low-pressure nitrogen is split into two streams. The majority of the low-pressure nitrogen is compressed and fed to the gas turbine as diluent nitrogen. A small portion of the nitrogen is used as the regeneration gas for the pre-purifiers and recombined with the diluent nitrogen. A high-pressure nitrogen stream is also produced from the cold box and is further compressed before it is also supplied to the gas turbine.

Exhibit 4-1 Typical ASU Process Schematic

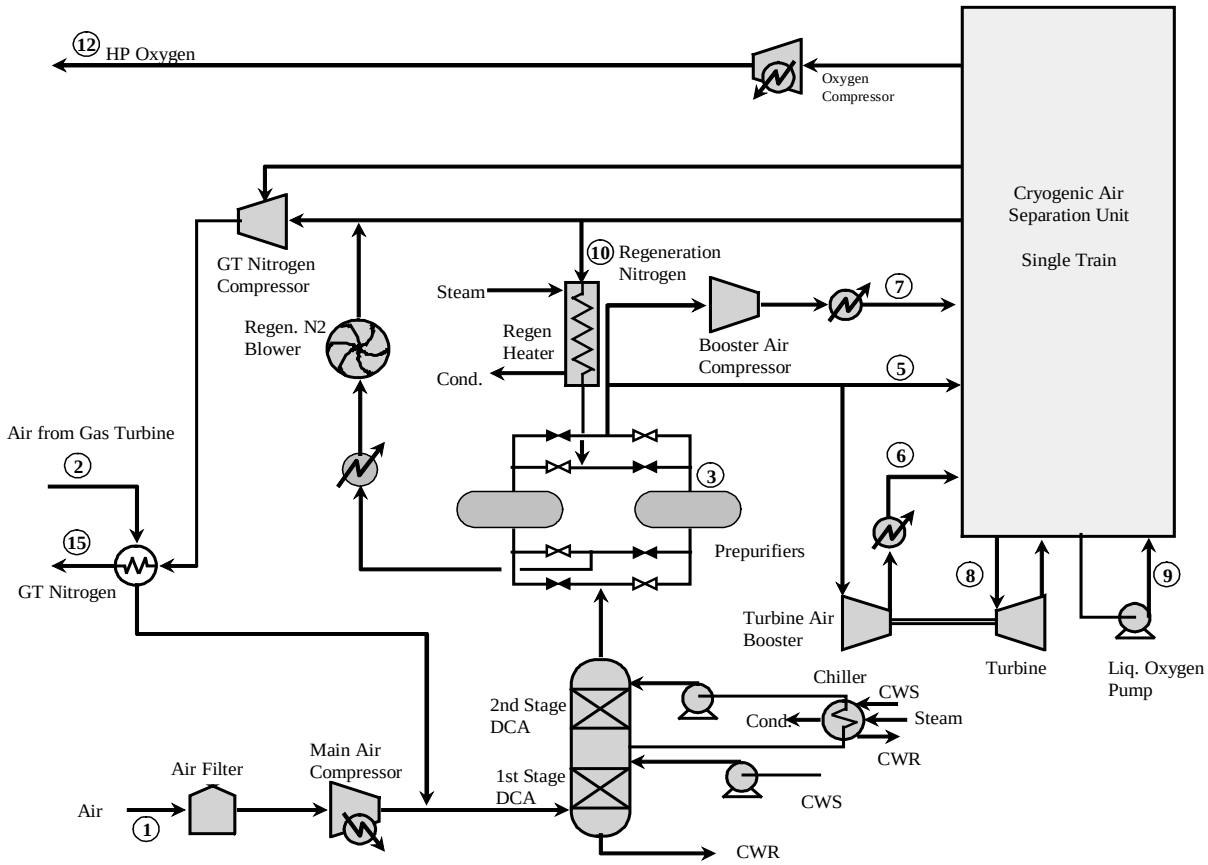

4.2.4 Gasification

Each IGCC plant design in this study utilizes two gasification trains to process the Illinois No. 6 coal. Each of the 2 x 50 percent gasifiers operates at maximum capacity. The largest operating GEE gasifier is the 2,268 tonne/day (2,500 TPD) unit at Polk Power Station. However, that unit operates at about 2.8 MPa (400 psia). The gasifier in this study, which operates at 5.6 MPa (815 psia), will be able to process more coal and maintain the same gas residence time.

The slurry feed pump takes suction from the slurry run tank, and the discharge is sent to the feed injector of the GEE gasifier. Oxygen from the ASU is vented during preparation for startup and is sent to the feed injector during normal operation. The ASU supplies 95 mole percent oxygen to the GEE gasifiers and the Claus plant. Carbon conversion in the gasifier is assumed to be 98 percent, including a fines recycle stream.

The gasifier vessel is a refractory-lined, high-pressure combustion chamber. The coal slurry feedstock and oxygen are fed through a fuel injector at the top of the gasifier vessel. The coal slurry and the oxygen react in the gasifier at 5.6 MPa (815 psia) and 1,316 °C (2,400 °F) to produce syngas.

The syngas consists primarily of hydrogen and carbon monoxide, with lesser amounts of water vapor and CO_2, and small amounts of hydrogen sulfide, carbonyl sulfide, methane, argon, and nitrogen. The heat in the gasifier liquefies coal ash. Hot syngas and molten solids from the reactor flow downward into a radiant heat exchanger where the syngas is cooled.

4.2.5 Raw Gas Cooling/Particulate Removal

Syngas is cooled from 1,316 °C (2,400 °F) to 677 °C (1,250 °F) in the radiant synthesis gas cooler and the molten slag solidifies in the process. The solids collect in the water sump at the bottom of the gasifier and are removed periodically using a lock hopper system. The waste heat from this cooling is used to generate high-pressure saturated steam. Boiler feedwater in the tubes is saturated, and then steam and water are separated in a steam drum. This steam then forms part of the general heat recovery system that provides steam to the steam turbine.

The syngas exiting the radiant cooler is directed downwards by a dip tube into a water sump. Most of the entrained solids are separated from the syngas at the bottom of the dip tube as the syngas goes upwards through the water. The syngas exits the quench chamber saturated at a temperature of 223 °C (450 °F).

The slag handling system removes solids from the gasification process equipment. These solids consist of a small amount of unconverted carbon and essentially all of the ash contained in the feed coal. These solids are in the form of glass, which fully encapsulates any metals. Solids collected in the water sump below the radiant synthesis gas cooler are removed by gravity and forced circulation of water from the lock hopper circulating pump. The fine solids not removed from the bottom of the quench water sump remain entrained in the water circulating through the quench chamber. In order to limit the amount of solids recycled to the quench chamber, a continuous blowdown stream is removed from the bottom of the syngas quench. The blowdown

is sent to the vacuum flash drum in the black water flash section. The circulating quench water is pumped by circulating pumps to the quench gasifier.

4.2.6 Syngas Scrubber/Sour Water Stripper

Syngas exiting the water quench passes to a syngas scrubber where a water wash is used to remove remaining chlorides and particulate. The syngas exits the scrubber still saturated at 206 °C (403 °F).

The sour water stripper removes NH_3, SO_2, and other impurities from the scrubber and other waste streams. The stripper consists of a sour drum that accumulates sour water from the gas scrubber and condensate from synthesis gas coolers. Sour water from the drum flows to the sour stripper, which consists of a packed column with a steam-heated reboiler. Sour gas is stripped from the liquid and sent to the sulfur recovery unit. Remaining water is sent to wastewater treatment.

4.2.7 Water Gas Shift Reactors

In this study, IGCC Designs 2 through 4 include water gas shift (WGS) reactor(s). The WGS reaction converts most of the syngas carbon monoxide (CO) to hydrogen and CO_2 by reacting the CO with water over a bed of catalyst. A typical offering from a commercial catalyst vendor is a steam-to-dry gas (S:DG) molar ratio of 0.3 at the outlet of the final shift reactor. The function of this excess steam is to drive the shift equilibrium toward the products. The reaction consumes one mol of water per mol of CO converted, and releases heat in the process:

$$H_2O + CO \rightarrow H_2 + CO_2 \qquad \Delta H_{rxn} = -17{,}697 \text{ Btu/lb-mol} \quad (1)$$

The WGS reactor(s) can be located either upstream of the AGR system (sour gas shift) or immediately downstream (sweet gas shift). If the WGS is located downstream of the AGR, then the metallurgy of the unit is less stringent but additional equipment must be added to the process. Products from the gasifier are humidified and contain a portion of the water vapor necessary to meet the water-to-gas criteria at the reactor inlet. If the CO converter is located downstream of the AGR, then the gasifier product would first have to be cooled and the free water separated and treated. Then additional steam would have to be generated and re-injected into the WGS feed to meet the required water-to-gas ratio. If the CO converter is located upstream of the AGR, no additional equipment is required since the WGS reactor(s) also promote carbonyl sulfide (COS) hydrolysis without a separate catalyst bed.

$$COS + H_2O \rightarrow H_2S + CO_2 \qquad \Delta H_{rxn} = -14{,}526 \text{ Btu/lb-mol} \quad (2)$$

This reaction converts sulfur to a form (H_2S) that is removed more readily than COS in an AGR system, helping to meet emission specifications. The Selexol™ solvent's affinity for H_2S is nearly 4 times greater than it is for COS [52]. Since this physical solvent's driving force is partial pressure, and sulfur concentrations are relatively low to begin with, conversion to H_2S (which the Selexol™ solvent can separate more easily) is effective in reducing the size of the Selexol™ process, while achieving the low sulfur levels required by local permitting agencies

(this analysis assumes 0.0128 lb SO_2/MMBtu). Therefore, for this study the WGS was located upstream of the AGR and is referred to as sour gas shift (SGS).

Depending on the plant design, the SGS consists of either two paths of parallel fixed-bed reactors arranged in series, or a single, parallel fixed-bed reactor. Cooling is provided between the series of reactors to control the exothermic temperature rise. The parallel set of reactors is required due to the high gas mass flow rate. The heat exchanger after the first SGS reactor is used to vaporize water. The heat exchanger after the second SGS reactor is used to raise IP steam, which then passes through the reheater section of the HRSG in the GEE IGCC plant design. Approximately 96 percent conversion of the CO is achieved in the GEE design.

The default S:DG ratio (0.3) represents a typical offering by a commercial catalyst vendor. The WGS and COS hydrolysis reactions occur at locations within the catalyst matrix, referred to as active sites, where water molecules have formed weak chemical bonds with the catalyst material. In order for chemical bonding of water molecules to occur on the catalyst surface, diffusion of H_2O through the bulk syngas must first occur. At the base case S:DG ratio, diffusion rates are fast enough such that there are adequate active catalyst sites on which the reactions can occur. This helps to maintain reasonable reactor sizes and costs.

A key portion of this study is devoted to optimizing the WGS step for lower degrees of carbon capture. The three methods that will be investigated are: (1) to bypass a portion of syngas around the shift reactor(s); (2) to use less shift steam (a S:DG ratio of 0.25 will be used); and (3) to use one shift reactor instead of two (D2). These will be used in combination with one another in order to arrive at the optimum configuration for each level of CO_2 capture.

4.2.8 Mercury Removal

An IGCC power plant has the potential of removing mercury in a more simple and cost-effective manner than conventional PC plants. This is because mercury can be removed from the syngas at elevated pressure and prior to combustion so that syngas volumes are much smaller than flue gas volumes in comparable PC cases. A conceptual design for a carbon bed adsorption system was developed for mercury control in the IGCC plants being studied. Data on the performance of carbon bed systems were obtained from the Eastman Chemical Company, which uses carbon beds at its syngas facility in Kingsport, Tennessee [53]. The coal mercury content (0.15 ppm dry) and carbon bed removal efficiency (95 percent) were discussed previously in Sections 2.2 and 2.4. IGCC-specific design considerations are discussed below.

Carbon Bed Location – The packed carbon bed vessels are located upstream of the sulfur recovery unit and syngas enters at a temperature near 35 °C (95 °F). Eastman Chemical also operates their beds ahead of their sulfur recovery unit at a temperature of 30 °C (86 °F) [53].

Process Parameters – An empty vessel basis gas residence time of approximately 20 seconds was used based on Eastman Chemical's experience [53]. Allowable gas velocities are limited by considerations of particle entrainment, bed agitation, and pressure drop. One-foot-per-second superficial velocity is in the middle of the range normally encountered and was selected for this application.

The bed density of 30 lb/ft^3 was based on the Calgon Carbon Corporation HGR-P sulfur-impregnated pelletized activated carbon. These parameters determined the size of the vessels and the amount of carbon required. Each gasifier train has one mercury removal bed and there are two gasifier trains in each IGCC case, resulting in two carbon beds per case.

Carbon Replacement Time – Eastman Chemicals replaces its bed every 18 to 24 months [53]. However, bed replacement is not because of mercury loading, but for other reasons including:

- A buildup in pressure drop
- A buildup of water in the bed
- A buildup of other contaminants

For this study, a 24 month carbon replacement cycle was assumed. Under these assumptions, the mercury loading in the bed would build up to 0.6–1.1 weight percent (wt%). Mercury capacity of sulfur-impregnated carbon can be as high as 20 wt%. The mercury-laden carbon is considered to be a hazardous waste, and the disposal cost estimate reflects this categorization.

4.2.9 Acid Gas Removal (AGR) Process Selection

Gasification of coal to generate power produces a syngas that must be treated prior to further utilization. A portion of the treatment consists of acid gas removal (AGR) and sulfur recovery. The environmental target for these IGCC plant designs is 0.0128 lb SO_2/MMBtu, which requires that the total sulfur content of the syngas be reduced to less than 30 ppmv. This includes all sulfur species, but in particular the total of COS and hydrogen sulfide (H_2S), thereby resulting in stack gas emissions of less than 4 ppmv SO_2.

4.2.9.1 COS Hydrolysis

The use of COS hydrolysis pretreatment in the feed to the AGR process provides a means to reduce the COS concentration. This method was first commercially proven at the Buggenum plant, and was also used at both the Tampa Electric and Wabash River IGCC projects. Several catalyst manufacturers including Haldor Topsoe and Porocel offer a catalyst that promotes the COS hydrolysis reaction. The COS hydrolysis reactor design employed in this study, for IGCC Designs 1 through 3, is based on information from Porocel. However, the WGS reactor(s) also reduce COS to H_2S as discussed in Section 4.2.7.

The COS hydrolysis reaction is equimolar with a slightly exothermic heat of reaction. The reaction is represented as follows:

$$COS + H_2O \leftrightarrow CO_2 + H_2S$$

Since the reaction is exothermic, higher conversion is achieved at lower temperatures. However, at lower temperatures the reaction kinetics are slower. Based on the feed gas for this evaluation, Porocel recommended a temperature of 177 to 204°C (350 to 400°F). Since the exit gas COS concentration is critical to the amount of H_2S that must be removed with the AGR process, a retention time of 50-75 seconds was used to achieve 99.5 percent conversion of the COS. The

Porocel activated alumina-based catalyst, designated as Hydrocel 640 catalyst, promotes the COS hydrolysis reaction without promoting reaction of H_2S and CO to form COS and H_2.

Although the reaction is exothermic, the heat of reaction is dissipated among the large amount of non-reacting components. Therefore, the reaction is essentially isothermal. The product gas, now containing less than 4 ppmv of COS, is cooled prior to entering the mercury removal process and the AGR.

4.2.9.2 Sulfur Removal

H_2S removal generally consists of absorption by a regenerable solvent. The most commonly used technique is based on countercurrent contact with the solvent. Acid gas-rich solution from the absorber is stripped of its acid gas in a regenerator, usually by application of heat. The regenerated lean solution is then cooled and recirculated to the top of the absorber, completing the cycle. Exhibit 4-2 is a simplified diagram of the AGR process [52].

There are well over 30 AGR processes in common commercial use throughout the oil, chemical, and natural gas industries. However, in a 2002 report by SFA Pacific a list of 42 operating and planned gasifiers shows that only six AGR processes are represented: Rectisol®, Sulfinol, methyldiethanolamine (MDEA), Selexol™, aqueous di-isoproponal amine (DIPA), and FLEXSORB [52]. These processes can be separated into three general types: chemical reagents, physical solvents, and hybrid solvents.

Exhibit 4-2 Flow Diagram for a Conventional AGR Unit

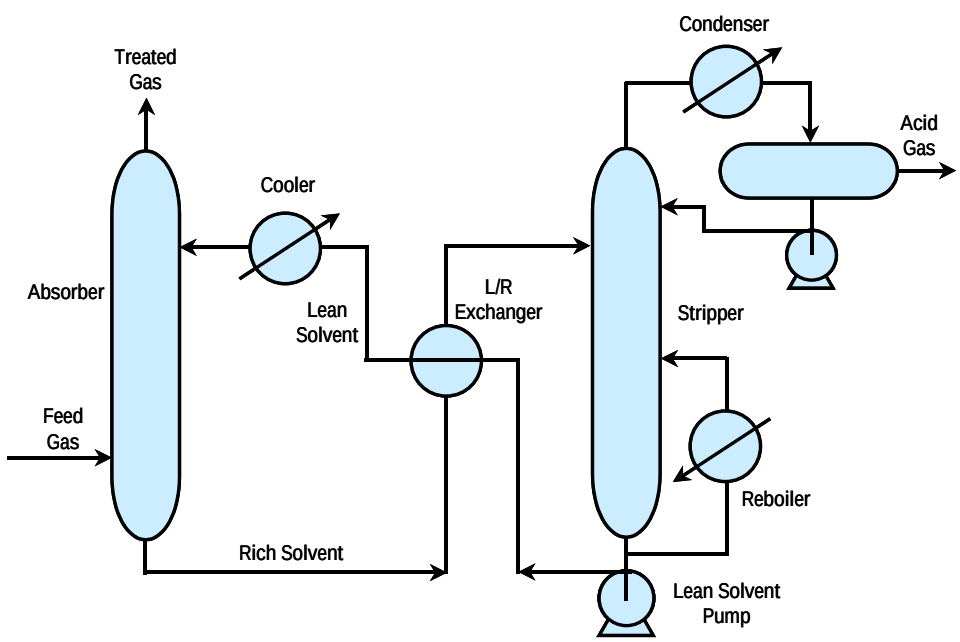

Chemical Solvents

Frequently used for AGR, chemical solvents are more suitable than physical or hybrid solvents for applications at lower operating pressures. The chemical nature of acid gas absorption makes solution loading and circulation less dependent on the acid gas partial pressure. Because the

solution is aqueous, co-absorption of hydrocarbons is minimal. In a conventional amine unit, the chemical solvent reacts exothermically with the acid gas constituents. They form a weak chemical bond that can be broken, releasing the acid gas and regenerating the solvent for reuse.

In recent years MDEA, a tertiary amine, has acquired a much larger share of the gas-treating market. Compared with primary and secondary amines, MDEA has superior capabilities for selectively removing H_2S in the presence of CO_2, is resistant to degradation by organic sulfur compounds, has a low tendency for corrosion, has a relatively low circulation rate, and consumes less energy. Several MDEA-based solvents that are formulated for high H_2S selectivity are commercially-available.

Chemical reagents are used to remove the acid gases by a reversible chemical reaction of the acid gases with an aqueous solution of various alkanolamines or alkaline salts in water. Exhibit 4-3 lists commonly used chemical reagents along with principal licensors that use them in their processes. The process consists of an absorber and regenerator, which are connected by a circulation of the chemical reagent aqueous solution. The absorber contacts the lean solution with the main gas stream (at pressure) to remove the acid gases by absorption/ reaction with the chemical solution. The acid-gas-rich solution is reduced to low pressure and heated in the stripper to reverse the reactions and strip the acid gas. The acid-gas-lean solution leaves the bottom of the regenerator stripper and is cooled, pumped to the required pressure and recirculated back to the absorber. For some amines, a filter and a separate reclaiming section (not shown) are needed to remove undesirable reaction byproducts.

Exhibit 4-3 Common Chemical Reagents Used in AGR Processes

Chemical Reagent	Acronym	Process Licensors Using the Reagent
Monoethanolamine	MEA	Dow, Exxon, Lurgi, Union Carbide
Diethanolamine	DEA	Elf, Lurgi
Diglycolamine	DGA	Texaco, Fluor
Triethanolamine	TEA	AMOCO
Diisopropanolamine	DIPA	Shell
Methyldiethanolamine	MDEA	BASF, Dow, Elf, Snamprogetti, Shell, Union Carbide, Coastal Chemical
Hindered amine		Exxon
Potassium carbonate	“hot pot”	Eickmeyer, Exxon, Lurgi, Union Carbide

Typically, the absorber temperature is 27 to 49 °C (80 to 120 °F) for amine processes, and the regeneration temperature is the boiling point of the solutions, generally 104 to 127 °C (220 to 260 °F). The liquid circulation rates can vary widely, depending on the amount of acid gas being captured. However, the most suitable processes are those that will dissolve 2 to 10 scf acid gas per gallon of solution circulated. Steam consumption can vary widely also: 0.7 to 1.5 pounds per gallon of liquid is typical.

The major advantage of these systems is the ability to remove acid gas to low levels at low to moderate H_2S partial pressures.

Physical Solvents

Physical solvents involve absorption of acid gases into certain organic solvents that have a high solubility for acid gases. As the name implies, physical solvents involve only the physical solution of acid gas – the acid gas loading in the solvent is proportional to the acid gas partial pressure (Henry's Law). Physical solvent absorbers are usually operated at lower temperatures than is the case for chemical solvents. The solution step occurs at high pressure and at or below ambient temperature while the regeneration step (dissolution) occurs by pressure letdown and indirect stripping with low-pressure 0.45 MPa (65 psia) steam. It is generally accepted that physical solvents become increasingly economical, and eventually superior to amine capture, as the partial pressure of acid gas in the syngas increases.

The physical solvents are regenerated by multistage flashing to low pressures. Because the solubility of acid gases increases as the temperature decreases, absorption is generally carried out at lower temperatures, and refrigeration is often required.

Most physical solvents are capable of removing organic sulfur compounds. Exhibiting higher solubility of H_2S than CO_2, they can be designed for selective H_2S or total acid gas removal. In applications where CO_2 capture is desired the CO_2 is flashed off at various pressures, which reduces the compression work and parasitic power load associated with sequestration.

Physical solvents co-absorb heavy hydrocarbons from the feed stream. Since heavy hydrocarbons cannot be recovered by flash regeneration, they are stripped along with the acid gas during heated regeneration. These hydrocarbon losses result in a loss of valuable product and may lead to CO_2 contamination.

Several physical solvents that use anhydrous organic solvents have been commercialized. They include the Selexol™ process, which uses dimethyl ether of polyethylene glycol as a solvent; Rectisol®, with methanol as the solvent; Purisol, which uses N-methyl-2-pyrrolidone (NMP) as a solvent; and the propylene-carbonate process.

Exhibit 4-4 is a simplified flow diagram for a physical reagent type acid gas removal process [52]. Common physical solvent processes, along with their licensors, are listed in Exhibit 4-5.

Exhibit 4-4 Physical Solvent AGR Process Simplified Flow Diagram

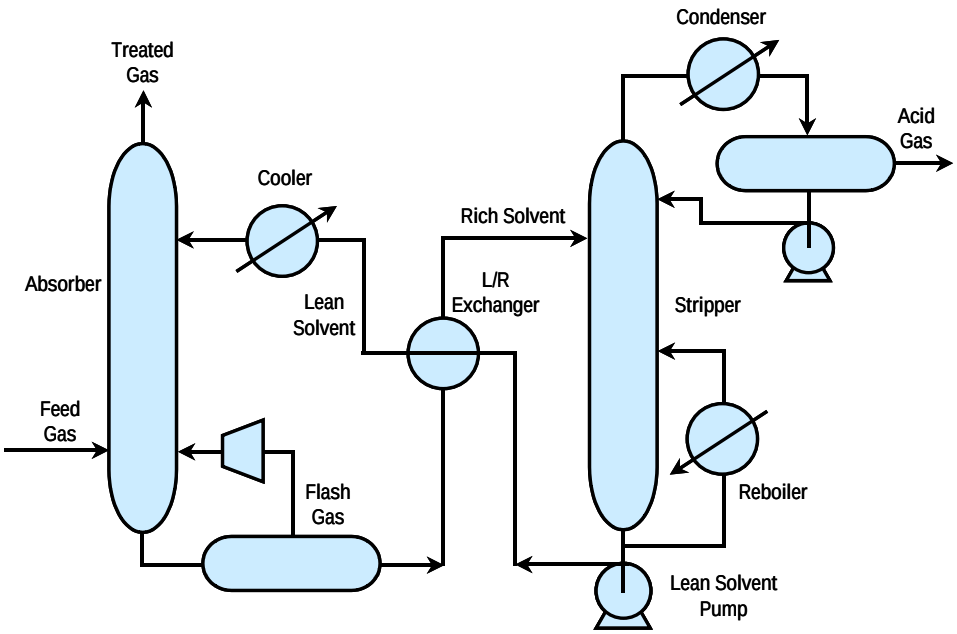

Exhibit 4-5 Common Physical Solvents Used in AGR Processes

Solvent	Solvent/Process Trade Name	Process Licensors
Dimethyl ether of polyethylene glycol	Selexol™	UOP
Methanol	Rectisol®	Linde AG and Lurgi
Methanol and toluene	Rectisol II	Linde AG
N—methyl pyrrolidone	Purisol	Lurgi
Polyethylene glycol and dialkyl ethers	Sepasolv MPE	BASF
Propylene carbonate	Fluor Solvent	Fluor
Tetrahydrothiophenedioxide	Sulfolane	Shell
Tributyl phosphate	Estasolvan	Uhde and IFP

Hybrid Solvents

Hybrid solvents combine the high treated-gas purity offered by chemical solvents with the flash regeneration and lower energy requirements of physical solvents. Some examples of hybrid solvents are Sulfinol, Flexsorb PS, and Ucarsol LE.

Sulfinol is a mixture of sulfolane (a physical solvent), DIPA or MDEA (chemical solvent), and water. DIPA is used when total acid gas removal is specified, while MDEA provides for selective removal of H_2S.

Flexsorb PS is a mixture of a hindered amine and an organic solvent. Physically similar to Sulfinol, Flexsorb PS is very stable and resistant to chemical degradation. High treated-gas purity, with less than 50 ppmv of CO_2 and 4 ppmv of H_2S, can be achieved. Both Ucarsol LE-701, for selective removal, and LE-702, for total acid gas removal, are formulated to remove mercaptans from feed gas.

Mixed chemical and physical solvents combine the features of both systems. The mixed solvent allows the solution to absorb an appreciable amount of gas at high pressure. The amine portion is effective as a reagent to remove the acid gas to low levels when high purity is desired.

Mixed solvent processes generally operate at absorber temperatures similar to those of the amine-type chemical solvents and do not require refrigeration. They also retain some advantages of the lower steam requirements typical of the physical solvents. Common mixed chemical and physical solvent processes, along with their licensors, are listed in Exhibit 4-6. The key advantage of mixed solvent processes is their apparent ability to remove H_2S and, in some cases, COS to meet very stringent purified gas specifications.

Exhibit 4-6 Common Mixed Solvents Used in AGR Processes

Solvent/Chemical Reagent	Solvent/Process Trade Name	Process Licensors
Methanol/MDEA or diethylamine	Amisol	Lurgi
Sulfolane/MDEA or DIPA	Sulfinol	Shell
Methanol and toluene	Selefining	Snamprogetti
(Unspecified) /MDEA	FLEXSORB PS	Exxon

Exhibit 4-7 shows reported equilibrium solubility data for H_2S and CO_2 in various representative solvents [52]. The solubility is expressed as standard cubic feet of gas per gallon liquid per atmosphere gas partial pressure.

The figure illustrates the relative solubilities of CO_2 and H_2S in different solvents and the effects of temperature. More importantly, it shows an order of magnitude higher solubility of H_2S over CO_2 at a given temperature, which gives rise to the selective absorption of H_2S in physical solvents. It also illustrates that the acid gas solubility in physical solvents increases with lower solvent temperatures.

Exhibit 4-7 Equilibrium Solubility Data on H_2S and CO_2 in Various Solvents

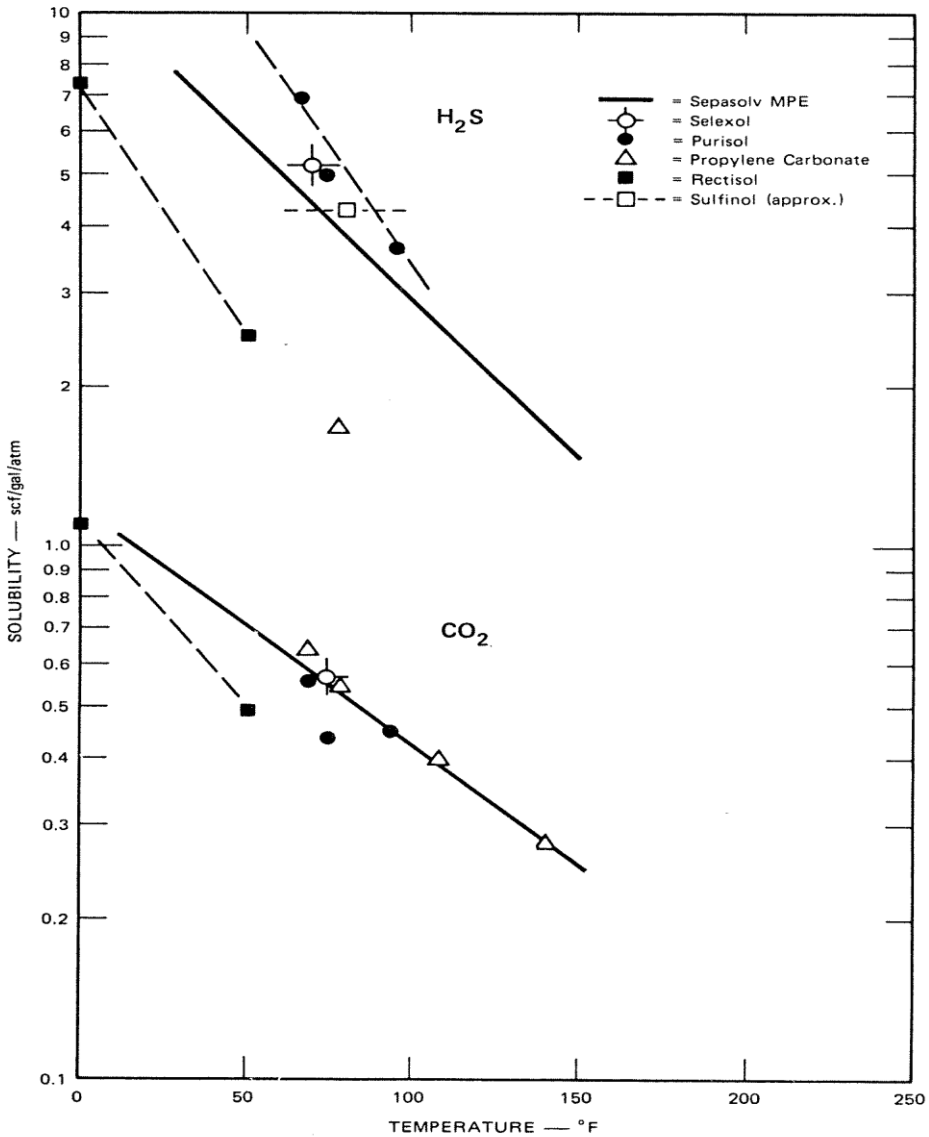

The ability of a process to selectively absorb H_2S may be further enhanced by the relative absorption rates of H_2S and CO_2. Thus, some processes, besides using equilibrium solubility differences, will use absorption rate differences between the two acid gases to achieve selectivity. This is particularly true of the amine processes where the CO_2 and H_2S absorption rates are very different.

4.2.9.3 Selexol™ System

There are numerous commercial AGR processes that could meet the sulfur environmental target of this study. The most frequently used AGR systems (Selexol™, Sulfinol, MDEA, and Rectisol®) have all been used with the GEE gasifier in various applications. For Design 1, a

single-stage Selexol™ system was chosen based on the GEE gasifier operating at a high pressure (815 psia), which favors the physical solvent used in the Selexol™ process.

For Designs 2 through 4, a two-stage Selexol™ process was employed for selective H_2S removal and bulk CO_2 capture. The two-stage Selexol™ system was chosen based on the GEE gasifier operating at a high pressure (815 psia), which favors the physical solvent used in the Selexol™ process. A brief process description follows.

Untreated syngas enters the first of two absorbers where H_2S is preferentially removed using loaded solvent from the CO_2 absorber. The gas exiting the H_2S absorber passes through the second absorber where CO_2 is removed using first flash regenerated, chilled solvent followed by thermally regenerated solvent added near the top of the column. The treated gas exits the absorber and is sent either directly to the CT or is partially humidified prior to entering the CT. A portion of the gas can also be used for coal drying, when required.

The amount of hydrogen recovered from the syngas stream is dependent on the Selexol™ process design conditions. In this study, hydrogen recovery is 99.4 percent. The minimal hydrogen slip to the CO_2 sequestration stream maximizes the overall plant efficiency. The Selexol™ plant cost estimates are based on a plant designed to recover this high percentage of hydrogen. For model simplification, a nominal recovery of 100 percent was used with the assumption that the additional 0.6 percent hydrogen sent to the CT would have a negligible impact on overall system performance.

The CO_2 loaded solvent exits the CO_2 absorber and a portion is sent to the H_2S absorber, a portion is sent to a reabsorber and the remainder is sent to a series of flash drums for regeneration. The CO_2 product stream is obtained from the three flash drums, and after flash regeneration the solvent is chilled and returned to the CO_2 absorber.

The rich solvent exiting the H_2S absorber is combined with the rich solvent from the reabsorber and the combined stream is heated using the lean solvent from the stripper. The hot, rich solvent enters the H_2S concentrator and partially flashes. The remaining liquid contacts nitrogen from the ASU and a portion of the CO_2 along with lesser amounts of H_2S and COS are stripped from the rich solvent. The stripped gases from the H_2S concentrator are sent to the reabsorber where the H_2S and COS that were co-stripped in the concentrator are transferred to a stream of loaded solvent from the CO_2 absorber. The clean gas from the reabsorber is combined with the clean gas from the H_2S absorber and sent to the CT.

The solvent exiting the H_2S concentrator is sent to the stripper where the absorbed gases are liberated by hot gases flowing up the column from the steam heated reboiler. Water in the overhead vapor from the stripper is condensed and returned as reflux to the stripper or exported as necessary to maintain the proper water content of the lean solvent. The acid gas from the stripper is sent to the Claus plant for further processing. The lean solvent exiting the stripper is first cooled by providing heat to the rich solvent, then further cooled by exchange with the product gas and finally chilled in the lean chiller before returning to the top of the CO_2 absorber. A Selexol process flow diagram is shown in Exhibit 4-8.

Exhibit 4-8 Generic Two-Stage Selexol™ Process Flow Diagram

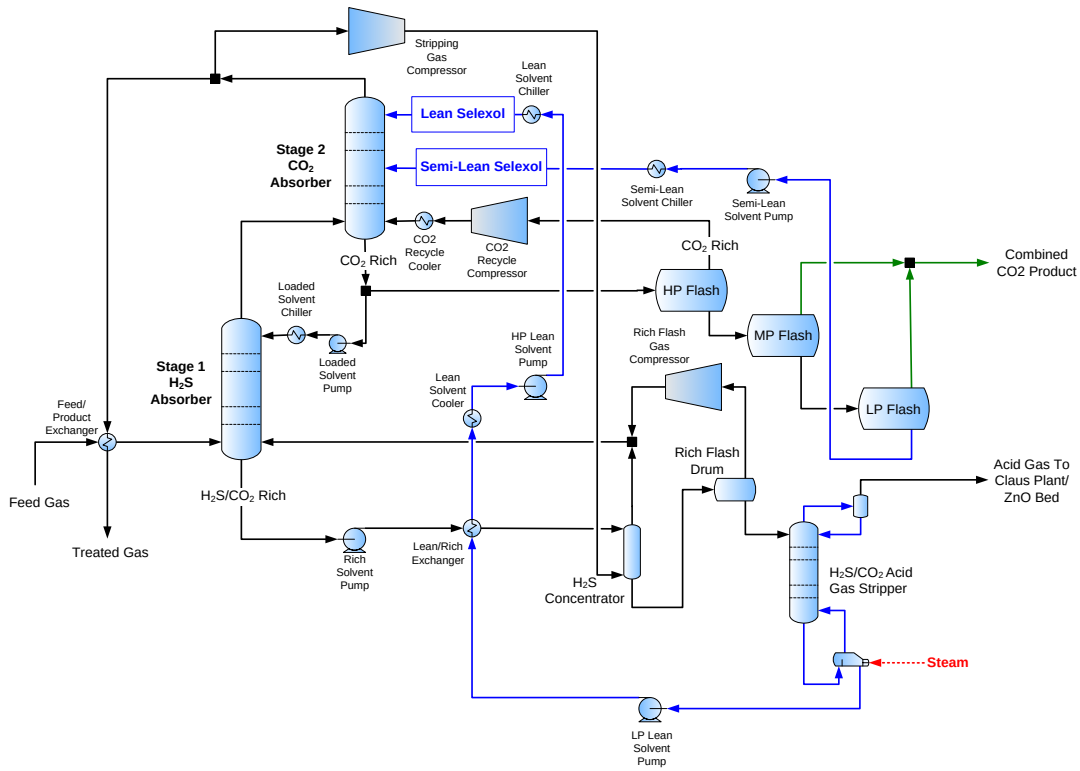

4.2.10 CO_2 Compression and Dehydration

CO_2 from the two-stage Selexol™ unit in IGCC Designs 2 through 4 is flashed at three pressure levels to separate CO_2 and decrease H_2 losses to the CO_2 pipeline. The HP CO_2 stream is flashed at 2.0 MPa (289.7 psia), compressed, and recycled back to the CO_2 absorber. The MP CO_2 stream is flashed at 1.0 MPa (149.7 psia). The LP CO_2 stream, is flashed at 0.1 MPa (16.7 psia), and is compressed to 1.0 MPa (149.5 psia) and combined with the MP CO_2 stream. The combined stream is compressed from 2.1 MPa (300 psia) to a supercritical condition at 15.3 MPa (2,215 psia) using a multiple-stage, intercooled compressor. During compression, the CO_2 stream is dehydrated to a dewpoint of -40 ºC (-40 °F) with triethylene glycol. The raw CO_2 stream from the Selexol™ process contains over 99 percent CO_2 with the balance primarily hydrogen. The CO_2 is transported to the plant fence line and is sequestration ready. CO_2 TS&M costs were estimated using the methodology described in Section 2.7.

4.2.11 Sulfur Recovery/Tail Gas Cleanup Process Selection

Currently, most of the world's sulfur is produced from the acid gases coming from gas treating. The Claus process remains the mainstay for sulfur recovery. Conventional three-stage Claus plants, with indirect reheat and feeds with a high H_2S content, can approach 98 percent sulfur recovery efficiency. However, since environmental regulations have become more stringent, sulfur recovery plants are required to recover sulfur with over 99.8 percent efficiency. To meet these stricter regulations, the Claus process underwent various modifications and add-ons.

The add-on modification to the Claus plant selected for this study can be considered a separate option from the Claus process. In this context, it is often called a tail gas treating unit (TGTU) process.

4.2.11.1 The Claus Process

The Claus process converts H_2S to elemental sulfur via the following reactions:

$$H_2S + 3/2\ O_2 \leftrightarrow H_2O + SO_2$$

$$2H_2S + SO_2 \leftrightarrow 2H_2O + 3S$$

The second reaction, the Claus reaction, is equilibrium limited. The overall reaction is:

$$3H_2S + 3/2\ O_2 \leftrightarrow 3H_2O + 3S$$

The sulfur in the vapor phase exists as S_2, S_6, and S_8 molecular species, with the S_2 predominant at higher temperatures, and S_8 predominant at lower temperatures.

A simplified process flow diagram of a typical three-stage Claus plant is shown in Exhibit 4-9 [52]. One-third of the H_2S is burned in the furnace with oxygen from the air to give sufficient SO_2 to react with the remaining H_2S. Since these reactions are highly exothermic, a waste heat boiler that recovers this heat to generate high-pressure steam usually follows the furnace. Sulfur is condensed in a condenser that follows the high-pressure steam recovery section. Low-pressure steam is raised in the condenser. The tail gas from the first condenser then goes to several catalytic conversion stages, usually 2 to 3, where the remaining sulfur is recovered via the Claus reaction. Each catalytic stage consists of gas preheat, a catalytic reactor, and a sulfur condenser. The liquid sulfur goes to the sulfur pit, while the tail gas proceeds to the incinerator or for further processing in a TGTU.

4.2.11.2 Claus Plant Sulfur Recovery Efficiency

The Claus reaction is equilibrium limited, and sulfur conversion is sensitive to the reaction temperature. The highest sulfur conversion in the thermal zone is limited to about 75 percent. Typical furnace temperatures are in the range from 1,093 to 1427 °C (2,000 to 2,600 °F), and as the temperature decreases, conversion increases dramatically.

Exhibit 4-9 Typical Three-Stage Claus Sulfur Plant

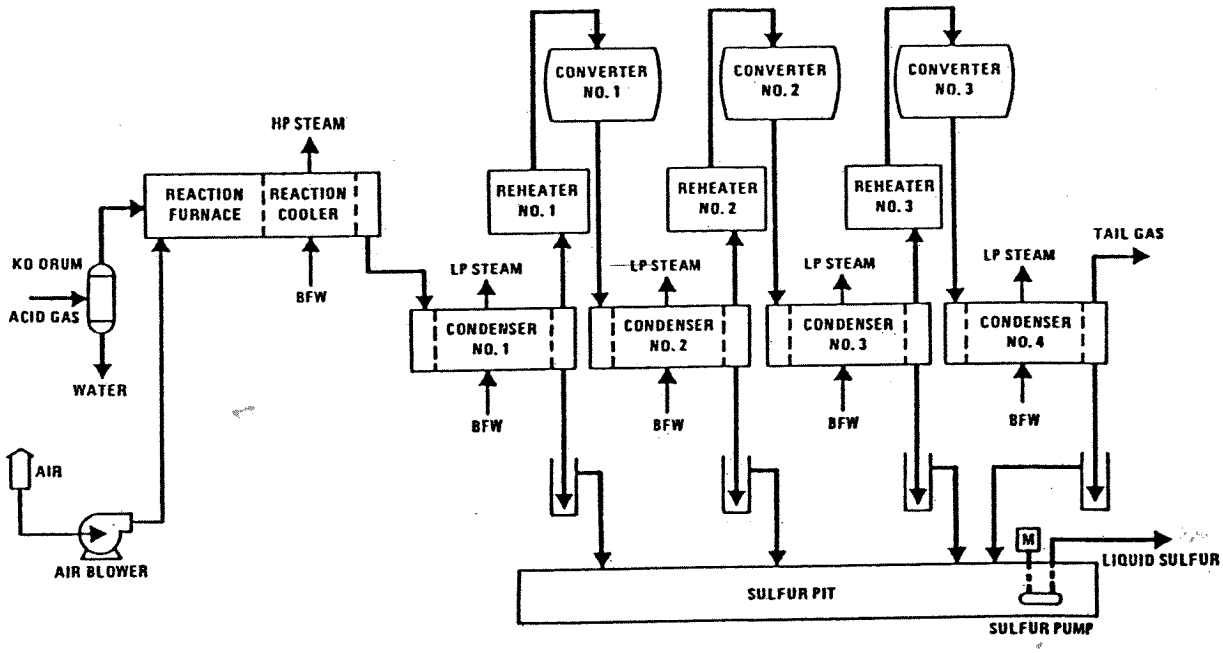

Claus plant sulfur recovery efficiency depends on many factors, including:

- H_2S concentration of the feed gas
- Number of catalytic stages
- Gas reheat method

In order to keep Claus plant recovery efficiencies approaching 94 to 96 percent for feed gases that contain about 20 to 50 percent H_2S, a split-flow design is often used. In this version of the Claus plant, part of the feed gas is bypassed around the furnace to the first catalytic stage, while the rest of the gas is oxidized in the furnace to mostly SO_2. This results in a more stable temperature in the furnace.

4.2.11.3 Oxygen-Blown Claus

Large diluent streams in the feed to the Claus plant, such as N_2 from combustion air, or a high CO_2 content in the feed gas, lead to higher cost Claus processes and any add-on or tail gas units. One way to reduce diluent flows through the Claus plant and to obtain stable temperatures in the furnace for dilute H_2S streams is the oxygen-blown Claus process.

The oxygen-blown Claus process was originally developed to increase capacity at existing conventional Claus plants and to increase flame temperatures of low H_2S content gases. The process has also been used to provide the capacity and operating flexibility for sulfur plants where the feed gas is variable in flow and composition such as often found in refineries. The application of the process has now been extended to grass roots installations, even for rich H_2S

feed streams, to provide operating flexibility at lower costs than would be the case for conventional Claus units. At least four of the recently built gasification plants in Europe use oxygen enriched Claus units.

Oxygen enrichment results in higher temperatures in the front-end furnace, potentially reaching temperatures as high as 1,593 to 1,649 °C (2,900 to 3,000 °F) as the enrichment moves beyond 40 to 70 vol percent O_2 in the oxidant feed stream. Although oxygen enrichment has many benefits, its primary benefit for lean H_2S feeds is a stable furnace temperature. Sulfur recovery is not significantly enhanced by oxygen enrichment. Because the IGCC process already requires an ASU, the oxygen-blown Claus plant was chosen for all plant designs.

4.2.11.4 Tail Gas Treating

In many refinery and other conventional Claus applications, tail gas treating involves the removal of the remaining sulfur compounds from gases exiting the sulfur recovery unit. Tail gas from a typical Claus process, whether a conventional Claus or one of the extended versions of the process, usually contains small but varying quantities of COS, CS_2, H_2S, SO_2, and elemental sulfur vapors. In addition, there may be H_2, CO, and CO_2 in the tail gas. In order to remove the rest of the sulfur compounds from the tail gas, all of the sulfur-bearing species must first be converted to H_2S. Then, the resulting H_2S is absorbed into a solvent and the clean gas vented or recycled for further processing. The clean gas resulting from the hydrolysis step can undergo further cleanup in a dedicated absorption unit or be integrated with an upstream AGR unit. The latter option is particularly suitable with physical absorption solvents. The approach of treating the tail gas in a dedicated amine absorption unit and recycling the resulting acid gas to the Claus plant is the one used by the Shell Claus Off-gas Treating (SCOT) process. With tail gas treatment, Claus plants can achieve overall removal efficiencies in excess of 99.9 percent.

In the case of IGCC applications, the tail gas from the Claus plant can be catalytically hydrogenated and then recycled back into the system with the choice of location being technology dependent, or it can be treated with a SCOT-type process. For the GEE gasifier, the Claus plant tail gas is hydrogenated, water is separated, and the tail gas is compressed and returned to the Selexol™ process for further treatment. GEE experience at the Polk Power Station is not relevant to this study since the acid gas is converted to sulfuric acid rather than sulfur and the tail gas, containing 150-250 ppm SO_2, is discharged through a dedicated stack [46].

4.2.11.5 Flare Stack

A self-supporting, refractory-lined, carbon steel flare stack is typically provided to combust and dispose of unreacted gas during startup, shutdown, and upset conditions. However, in each IGCC plant design a flare stack was provided for syngas dumping during startup, shutdown, etc. This flare stack eliminates the need for a separate Claus plant flare.

4.2.12 Slag Handling

The slag handling system conveys, stores, and disposes of slag removed from the gasification process. Spent material drains from the gasifier bed into a water bath in the bottom of the

gasifier vessel. A slag crusher receives slag from the water bath and grinds the material into pea-sized fragments. A slag/water slurry that is between 5 and 10 percent solids leaves the GEE gasifier pressure boundary through the use of lockhoppers to a series of dewatering bins.

The slag is dewatered, the water is clarified and recycled and the dried slag is transferred to a storage area for disposal. The specifics of slag handling vary among the gasification technologies regarding how the water is separated and the end uses of the water recycle streams.

In this study, the slag bins were sized for a nominal holdup capacity of 72 hours of full-load operation. At periodic intervals, a convoy of slag-hauling trucks will transmit the unloading station underneath the hopper and remove a quantity of slag for disposal. Approximately ten truckloads per day are required to remove the total quantity of slag produced by the plant operating at nominal rated power. While the slag is suitable for use as a component of road paving mixtures, it was assumed in this study that the slag would be landfilled at a specified cost just as the ash from the PC boiler cases is assumed to be landfilled at the same per ton cost.

4.2.13 Power Island

4.2.13.1 Combustion Turbine

The gas turbine generator selected for this application is representative of the advanced F Class turbines. This machine is an axial flow, single spool, and constant speed unit, with variable inlet guide vanes. The turbine includes advanced bucket cooling techniques, compressor aerodynamic design and advanced alloys, enabling a higher firing temperature than the previous generation machines. The standard production version of this machine is fired with natural gas and is also commercially offered for use with IGCC derived syngas, although only earlier versions of the turbine are currently operating on syngas. For the purposes of this study, it was assumed that the advanced F Class turbine will be commercially available to support a 2015 startup date on both conventional and high hydrogen content syngas representative of the cases with CO_2 capture. High H_2 fuel combustion issues like flame stability, flashback and NOx formation were assumed to be solved in the time frame needed to support deployment. However, because of the level of design detail, process contingencies were included in the cost estimates as described in Section 2.7. Performance typical of an advanced F class turbine on natural gas at ISO conditions is presented in Exhibit 4-10.

Exhibit 4-10 Advanced F Class Combustion Turbine Performance Characteristics Using Natural Gas

	Advanced F Class
Firing Temperature Class, °C (°F)	1371+ (2500+)
Airflow, kg/s (lb/s)	431 (950)
Pressure Ratio	18.5
NOx Emissions, ppmv	25
Simple Cycle Output, MW	185
Combined cycle performance	
Net Output, MW	280
Net Efficiency (LHV), %	57.5
Net Heat Rate (LHV), kJ/kWh (Btu/kWh)	6,256 (5,934)

In this service, with syngas from an IGCC plant, the machine requires some modifications to the burner and turbine nozzles in order to properly combust the low-Btu gas and expand the combustion products in the turbine section of the machine.

The modifications to the machine include some redesign of the original can-annular combustors. A second modification involves increasing the nozzle areas of the turbine to accommodate the mass and volume flow of low-Btu fuel gas combustion products, which are increased relative to those produced when firing natural gas. Other modifications include rearranging the various auxiliary skids that support the machine to accommodate the spatial requirements of the plant general arrangement. The generator is a standard hydrogen-cooled machine with static exciter.

4.2.13.2 Combustion Turbine Package Scope of Supply

The CT is typically supplied in several fully shop-fabricated modules, complete with all mechanical, electrical and control systems as required for CT operation. Site CT installation involves module inter-connection, and linking CT modules to the plant systems. The CT package scope of supply for combined cycle applications, while project specific, does not vary much from project-to-project. The typical scope of supply is presented in Exhibit 4-11.

Exhibit 4-11 Combustion Turbine Typical Scope of Supply

	System	System Scope
1.0	**Engine Assembly**	Coupling to Generator, Dry Chemical Exhaust Bearing Fire Protection System, Insulation Blankets, Platforms, Stairs and Ladders
1.1	Engine Assembly with Bedplate	Variable Inlet Guide, Vane System Compressor, Bleed System, Purge Air System, Bearing Seal Sir System, Combustors, Dual Fuel Nozzles Turbine Rotor Air Cooler
1.2	Walk-in acoustical enclosure	HVAC, Lighting, and Low Pressure CO_2 Fire Protection System

	System	System Scope
2.0	**Mechanical Package**	HVAC and Lighting, Air Compressor for Pneumatic System, Low Pressure CO_2 Fire Protection System
2.1 2.2	Lubricating Oil System and Control Oil System	Lube Oil Reservoir, Accumulators, 2x100% AC Driven Oil Pumps DC Emergency Oil Pump with Starter, 2x100% Oil Coolers, Duplex Oil Filter, Oil Temperature and Pressure Control Valves, Oil Vapor Exhaust Fans and Demister Oil Heaters Oil Interconnect Piping (SS and CS) Oil System Instrumentation Oil for Flushing and First Filling
3.0	**Electrical Package**	HVAC and Lighting, AC and DC Motor Control Centers, Generator Voltage Regulating Cabinet, Generator Protective Relay Cabinet, DC Distribution Panel, Battery Charger, Digital Control System with Local Control Panel (all control and monitoring functions as well as data logger and sequence of events recorder), Control System Valves and Instrumentation Communication link for interface with plant DCS Supervisory System, Bentley Nevada Vibration Monitoring System, Low Pressure CO_2 Fire Protection System, Cable Tray and Conduit Provisions for Performance Testing including Test Ports, Thermowells, Instrumentation and DCS interface cards
4.0	**Inlet And Exhaust Systems**	Inlet Duct Trash Screens, Inlet Duct and Silencers, Self Cleaning Filters, Hoist System For Filter Maintenance, Evaporative Cooler System, Exhaust Duct Expansion Joint, Exhaust Silencers Inlet and Exhaust Flow, Pressure and Temperature Ports and Instrumentation
5.0	**Fuel Systems**	
5.1	Fuel Syngas System	Gas Valves Including Vent, Throttle and Trip Valves Gas Filter/Separator Gas Supply Instruments and Instrument Panel
5.2	Backup Fuel System	Specific to backup fuel type
6.0	**Starting System**	Enclosure, Starting Motor or Static Start System, Turning Gear and Clutch Assembly, Starting Clutch Torque Converter
7.0	**Generator**	Static or Rotating Exciter (Excitation transformer to be included for a static system), Line Termination Enclosure with CTs, VTs, Surge Arrestors, and Surge Capacitors, Neutral Cubicle with CT, Neutral Tie Bus, Grounding Transformer, and Secondary Resistor, Generator Gas Dryer, Seal Oil System (including Defoaming Tank, Reservoir, Seal Oil Pump, Emergency Seal Oil Pump, Vapor Extractor, and Oil Mist Eliminator), Generator Auxiliaries Control Enclosure, Generator Breaker, Iso-Phase bus connecting generator and breaker, Grounding System Connectors
7.1	Generator Cooling	TEWAC System (including circulation system, interconnecting piping and controls), or Hydrogen Cooling System (including H_2 to Glycol and Glycol to Air heat exchangers, liquid level detector circulation system, interconnecting piping and controls)
8.0	**Miscellaneous**	Interconnecting Pipe, Wire, Tubing and Cable, Instrument Air System Including Air Dryer, On Line and Off Line Water Wash System, LP CO_2 Storage Tank, Drain System, Drain Tanks, Coupling, Coupling Cover and Associated Hardware

4.2.13.3 CT Firing Temperature Control Issue for Low Calorific Value Fuel

A gas turbine when fired on low calorific value syngas has the potential to increase power output due to the increase in flow rate through the turbine. The higher turbine flow and moisture content of the combustion products can contribute to overheating of turbine components, affect rating criteria for the parts lives, and require a reduction in syngas firing temperatures (compared to the natural gas firing) to maintain design metal temperature. [54] Uncontrolled syngas firing temperature could result in more than 50 percent life cycle reduction of stage 1 buckets. Control systems for syngas applications include provisions to compensate for these effects by maintaining virtually constant generation output for the range of the specified ambient conditions. Inlet guide vanes (IGV) and firing temperature are used to maintain the turbine output at the maximum torque rating, producing a flat rating up to the IGV full open position. Beyond the IGV full open position, flat output may be extended to higher ambient air temperatures by steam/nitrogen injection.

In this study, the firing temperature (defined as inlet rotor temperature) with CO_2 capture is 1,318–1,327 °C (2,405–2,420° F). A reduction in firing temperature with CO_2 capture is done to maintain parts life as the water content of the combustion products increases to 14–16 vol%. The decrease in temperature also results in the lower temperature steam cycle with CO_2 capture 538 °C/538 °C [1,000 °F/1,000 °F].

4.2.13.4 Combustion Turbine Syngas Fuel Requirements

Typical fuel specifications and contaminant levels for successful CT operation are presented for F Class machines in Exhibit 4-12 and Exhibit 4-13 [55]. The vast majority of published CT performance information is specific to natural gas operation. Turbine performance using syngas requires vendor input as was obtained for this study.

Exhibit 4-12 Typical Fuel Specification for F-Class Machines

	Max	Min
LHV, kJ/m^3 (Btu/scf)	None	3.0 (100)
Gas Fuel Pressure, MPa (psia)	3.1 (450)	
Gas Fuel Temperature, °C (°F)	(1)	Varies with gas pressure (2)
Flammability Limit Ratio, Rich-to-Lean, Volume Basis	(3)	2:2.1
Sulfur	(4)	

Notes:

1. The maximum fuel temperature is defined in reference [56]
2. To ensure that the fuel gas supply to the gas turbine is 100 percent free of liquids the minimum fuel gas temperature must meet the required superheat over the respective dew point. This requirement is independent of the hydrocarbon and moisture concentration. Superheat calculation shall be performed as described in GEI-4140G [55].
3. Maximum flammability ratio limit is not defined. Fuel with flammability ratio significantly larger than those of natural gas may require start-up fuel
4. The quantity of sulfur in syngas is not limited by specification. Experience has shown that fuel sulfur levels up to 1 percent by volume do not significantly affect oxidation/corrosion rates.

4.2.13.5 Normal Operation

Inlet air is compressed in a single spool compressor to a pressure ratio of approximately 16:1. This pressure ratio was vendor specified and less than the 18.5:1 ratio used in natural gas applications. The majority of compressor discharge air remains on-board the machine and passes to the burner section to support combustion of the syngas. Compressed air is also used in burner, transition, and film cooling services. About 4 percent of the compressor air is extracted and integrated with the air supply of the ASU in Design 1. It may be technically possible to integrate the CT and ASU in CO_2 capture cases (Designs 2–4) as well; however, in this study integration was considered only for Design 1.

Exhibit 4-13 Allowable Gas Fuel Contaminant Level for F-Class Machines

	Turbine Inlet Limit, ppbw	Fuel Limit, ppmw		
		Turbine Inlet Flow/Fuel Flow		
		50	*12*	*4*
Lead	20	1.0	0.240	.080
Vanadium	10	0.5	0.120	0.040
Calcium	40	2.0	0.480	0.160
Magnesium	40	2.0	0.480	0.160
Sodium + Potassium				
Na/K = 28 (1)	20	1.0	0.240	0.080
Na/K = 3	10	0.5	0.120	0.40
Na/K ≤ 1	6	0.3	0.072	0.024
Particulates Total (2)	600	30	7.2	2.4
Above 10 microns	6	0.3	0.072	0.024

Notes:
1. Na/K=28 is nominal sea salt ratio
2. The fuel gas delivery system shall be designed to prevent generation or admittance of solid particulate to the gas turbine gas fuel system

Pressurized syngas is combusted in several (14) parallel diffusion combustors and syngas dilution is used to limit NOx formation. As described in Section 4.2.3.1 nitrogen from the ASU is used as the primary diluent followed by syngas humidification and finally by steam dilution, if necessary, to achieve an LHV of 4.5–4.8 MJ/Nm^3 (120–128 Btu/scf). The advantages of using nitrogen as the primary diluent include:

- Nitrogen from the ASU is already partially compressed and using it for dilution eliminates wasting the compression energy.
- Limiting the water content reduces the need to de-rate firing temperature for the high-hydrogen (CO_2 capture) cases.

There are some disadvantages to using nitrogen as the primary diluent, and these include:

- There is a significant auxiliary power requirement to further compress the large nitrogen flow from the ASU pressures of 0.4 and 1.3 MPa (56 and 182 psia) to the CT pressure of 3.2 MPa (465 psia).
- The low quality heat used in the syngas humidification process does not provide significant benefit to the process in other applications.
- Nitrogen is not as efficient as water in limiting NO_x emissions

It is not clear that one dilution method provides a significant advantage over the other. However, in this study nitrogen was chosen as the primary diluent based on suggestions by turbine industry experts during peer review of the report.

Hot combustion products are expanded in the three-stage turbine-expander. Given the assumed ambient conditions, back-end loss, and HRSG pressure drop, the CT exhaust temperature is nominally 566 °C (1,050 °F) with CO_2 capture.

Gross turbine power, as measured prior to the generator terminals, is 232 MW. The CT generator is a standard hydrogen-cooled machine with static exciter.

4.2.14 Steam Generation Island

4.2.14.1 Heat Recovery Steam Generator

The heat recovery steam generator (HRSG) is a horizontal gas flow, drum-type, multi-pressure design that is matched to the characteristics of the gas turbine exhaust gas when firing medium-Btu gas. High-temperature flue gas exiting the CT is conveyed through the HRSG to recover the large quantity of thermal energy that remains. Flue gas travels through the HRSG gas path and exits at 132 °C (270 °F) for all four IGCC plant designs.

The high pressure (HP) drum produces steam at main steam pressure, while the intermediate pressure (IP) drum produces process steam and turbine dilution steam, if required. The HRSG drum pressures are nominally 12.4/2.9 MPa (1,800/420 psia) for the HP/IP turbine sections, respectively. In addition to generating and superheating steam, the HRSG performs reheat duty for the cold/hot reheat steam for the steam turbine, provides condensate and feedwater heating, and also provides deaeration of the condensate.

Natural circulation of steam is accomplished in the HRSG by utilizing differences in densities due to temperature differences of the steam. The natural circulation HRSG provides the most cost-effective and reliable design.

The HRSG drums include moisture separators, internal baffles, and piping for feedwater/steam. All tubes, including economizers, superheaters, and headers and drums, are equipped with drains.

Safety relief valves are furnished in order to comply with appropriate codes and ensure a safe work place.

Superheater, boiler, and economizer sections are supported by shop-assembled structural steel. Inlet and outlet duct is provided to route the gases from the gas turbine outlet to the HRSG inlet and the HRSG outlet to the stack. A diverter valve is included in the inlet duct to bypass the gas when appropriate. Suitable expansion joints are also included.

4.2.14.2 Steam Turbine Generator and Auxiliaries

The steam turbine consists of an HP section, an IP section, and one double-flow LP section, all connected to the generator by a common shaft. The HP and IP sections are contained in a single-span, opposed-flow casing, with the double-flow LP section in a separate casing. The LP turbine has a last stage bucket length of 76 cm (30 in).

Main steam from the HRSG and gasifier island is combined in a header, and then passes through the stop valves and control valves and enters the turbine at 12.4 MPa/538 °C (1,800 psig/1,000 °F) with CO_2 capture. The steam initially enters the turbine near the middle of the high-pressure span, flows through the turbine, and returns to the HRSG for reheating. The reheat steam flows through the reheat stop valves and intercept valves and enters the IP section at 2.6 to 2.9 MPa/538 °C (375 to 420 psig/1,000 °F) with CO_2 capture. After passing through the IP section, the steam enters a crossover pipe, which transports the steam to the LP section. The steam divides into two paths and flows through the LP sections, exhausting downward into the condenser.

Turbine bearings are lubricated by a closed-loop, water-cooled, pressurized oil system. The oil is contained in a reservoir located below the turbine floor. During startup or unit trip an emergency oil pump mounted on the reservoir pumps the oil. When the turbine reaches 95 percent of synchronous speed, the main pump mounted on the turbine shaft pumps oil. The oil flows through water-cooled heat exchangers prior to entering the bearings. The oil then flows through the bearings and returns by gravity to the lube oil reservoir.

Turbine shafts are sealed against air in-leakage or steam blowout using a modern positive pressure variable clearance shaft sealing design arrangement connected to a low-pressure steam seal system. During startup, seal steam is provided from the main steam line. As the unit increases load, HP turbine gland leakage provides the seal steam. Pressure-regulating valves control the gland header pressure and dump any excess steam to the condenser. A steam packing exhauster maintains a vacuum at the outer gland seals to prevent leakage of steam into the turbine room. Any steam collected is condensed in the packing exhauster and returned to the condensate system.

The generator is a hydrogen-cooled synchronous type, generating power at 24 kV. A static, transformer type exciter is provided. The generator is cooled with a hydrogen gas recirculation system using fans mounted on the generator rotor shaft. The heat absorbed by the gas is removed as it passes over finned tube gas coolers mounted in the stator frame. Gas is prevented from escaping at the rotor shafts by a closed-loop oil seal system. The oil seal system consists of storage tank, pumps, filters, and pressure controls, all skid-mounted.

The steam turbine generator is controlled by a triple-redundant, microprocessor-based electro-hydraulic control system. The system provides digital control of the unit in accordance with programmed control algorithms, color CRT operator interfacing, and datalink interfaces to the balance-of-plant DCS, and incorporates on-line repair capability.

4.2.14.3 Condensate System

The condensate system transfers condensate from the condenser hotwell to the deaerator, through the gland steam condenser, gasifier, and the low-temperature economizer section in the HRSG. The system consists of one main condenser; two 50 percent capacity, motor-driven, vertical condensate pumps; one gland steam condenser; and a low-temperature tube bundle in the HRSG. Condensate is delivered to a common discharge header through separate pump discharge lines, each with a check valve and a gate valve. A common minimum flow recirculation line

discharging to the condenser is provided to maintain minimum flow requirements for the gland steam condenser and the condensate pumps.

4.2.14.4 Feedwater System

The function of the feedwater system is to pump the various feedwater streams from the deaerator storage tank in the HRSG to the respective steam drums. Two 50 percent capacity boiler feed pumps are provided for each of three pressure levels, HP, IP, and LP. Each pump is provided with inlet and outlet isolation valves, and outlet check valve. Minimum flow recirculation to prevent overheating and cavitation of the pumps during startup and low loads is provided by an automatic recirculation valve and associated piping that discharges back to the deaerator storage tank. Pneumatic flow control valves control the recirculation flow.

The feedwater pumps are supplied with instrumentation to monitor and alarm on low oil pressure, or high bearing temperature. Feedwater pump suction pressure and temperature are also monitored. In addition, the suction of each boiler feed pump is equipped with a startup strainer.

4.2.14.5 Main and Reheat Steam Systems

The function of the main steam system is to convey main steam generated in the synthesis gas cooler and HRSG from the HRSG superheater outlet to the HP turbine stop valves. The function of the reheat system is to convey steam from the HP turbine exhaust to the HRSG reheater, and to the turbine reheat stop valves.

With CO_2 capture, main steam at approximately 12.4 MPa/538 °C (1,800 psig/1,000 °F) exits the HRSG superheater through a motor-operated stop/check valve and a motor-operated gate valve, and is routed to the HP turbine. Cold reheat steam at approximately 3.1 to 3.4 MPa/341 °C (450 to 500 psia/645 °F) exits the HP turbine, flows through a motor-operated isolation gate valve, to the HRSG reheater. Hot reheat steam at approximately 2.9 MPa/538 °C (420 psia/1,000 °F) exits the HRSG reheater through a motor-operated gate valve and is routed to the IP turbines.

Steam piping is sloped from the HRSG to the drip pots located near the steam turbine for removal of condensate from the steam lines. Condensate collected in the drip pots and in low-point drains is discharged to the condenser through the drain system.

Steam flow is measured by means of flow nozzles in the steam piping. The flow nozzles are located upstream of any branch connections on the main headers.

Safety valves are installed to comply with appropriate codes and to ensure the safety of personnel and equipment.

4.2.14.6 Circulating Water System

The circulating water system is a closed-cycle cooling water system that supplies cooling water to the condenser to condense the main turbine exhaust steam. The system also supplies cooling water to the AGR plant as required, and to the auxiliary cooling system. The auxiliary cooling system is a closed-loop process that utilizes a higher quality water to remove heat from

compressor intercoolers, oil coolers and other ancillary equipment and transfers that heat to the main circulating cooling water system in plate and frame heat exchangers. The heat transferred to the circulating water in the condenser and other applications is removed by a mechanical draft cooling tower.

The system consists of two 50 percent capacity vertical circulating water pumps, a mechanical draft evaporative cooling tower, and carbon steel cement-lined interconnecting piping. The pumps are single-stage vertical pumps. The piping system is equipped with butterfly isolation valves and all required expansion joints. The cooling tower is a multi-cell wood frame counterflow mechanical draft cooling tower.

The condenser is a single-pass, horizontal type with divided water boxes. There are two separate circulating water circuits in each box. One-half of the condenser can be removed from service for cleaning or for plugging tubes. This can be done during normal operation at reduced load.

The condenser is equipped with an air extraction system to evacuate the condenser steam space for removal of non-condensable gases during steam turbine operation and to rapidly reduce the condenser pressure from atmospheric pressure before unit startup and admission of steam to the condenser.

4.2.14.7 Raw Water, Fire Protection, and Cycle Makeup Water Systems

The raw water system supplies cooling tower makeup, cycle makeup, service water and potable water requirements. The water source is 50 percent from a POTW and 50 percent from groundwater. Booster pumps within the plant boundary provide the necessary pressure.

The fire protection system provides water under pressure to the fire hydrants, hose stations, and fixed water suppression system within the buildings and structures. The system consists of pumps, underground and aboveground supply piping, distribution piping, hydrants, hose stations, spray systems, and deluge spray systems. One motor-operated booster pump is supplied on the intake structure of the cooling tower with a diesel engine backup pump installed on the water inlet line.

The cycle makeup water system provides high quality demineralized water for makeup to the HRSG cycle, for steam injection ahead of the water gas shift reactor(s) for appropriate plant designs, and for injection steam to the auxiliary boiler for control of NOx emissions, if required.

The cycle makeup system consists of two 100 percent trains, each with a full-capacity activated carbon filter, primary cation exchanger, primary anion exchanger, mixed bed exchanger, recycle pump, and regeneration equipment. The equipment is skid-mounted and includes a control panel and associated piping, valves, and instrumentation.

4.2.15 Accessory Electric Plant

The accessory electric plant consists of switchgear and control equipment, generator equipment, station service equipment, conduit and cable trays, and wire and cable. It also includes the main power transformer, all required foundations, and standby equipment.

4.2.16 Instrumentation and Control

An integrated plant-wide distributed control system (DCS) is provided. The DCS is a redundant microprocessor-based, functionally distributed control system. The control room houses an array of multiple video monitor (CRT) and keyboard units. The CRT/keyboard units are the primary interface between the generating process and operations personnel. The DCS incorporates plant monitoring and control functions for all the major plant equipment. The DCS is designed to be operational and accessible 99.5 percent of the time it is required (99.5 percent availability). The plant equipment and the DCS are designed for automatic response to load changes from minimum load to 100 percent. Startup and shutdown routines are manually implemented, with operator selection of modular automation routines available. The exception to this, and an important facet of the control system for gasification, is the critical controller system, which is a part of the license package from the gasifier supplier and is a dedicated and distinct hardware segment of the DCS.

This critical controller system is used to control the gasification process. The partial oxidation of the fuel feed and oxygen feed streams to form a syngas product is a stoichiometric, temperature- and pressure-dependent reaction. The critical controller utilizes a redundant microprocessor executing calculations and dynamic controls at 100- to 200-millisecond intervals. The enhanced execution speeds as well as evolved predictive controls allow the critical controller to mitigate process upsets and maintain the reactor operation within a stable set of operating parameters.

4.3 GEE IGCC CO_2 Capture Sensitivity

The evaluation scope included developing heat and mass balances and estimating GEE IGCC power plant performance while gasifying bituminous Illinois No. 6 coal. Equipment lists were developed for each design to support plant capital and operating costs estimates.

The IGCC plants are assumed to be built on a “green-field” site and utilize recirculating wet evaporative cooling systems for cycle heat rejection. Major systems for each plant (described in Section 4.2) include:

1. GEE radiant-only gasifier
2. ASU
3. Water gas shift
4. Acid gas removal
5. CO_2 Recovery
6. Balance of Plant

Support facilities include coal handling (receiving, crushing, slurry preparation, and storing), solid waste disposal, circulating water system with evaporative mechanical draft cooling towers, wastewater treatment, and other ancillary systems equipment necessary for an efficient, highly available, and completely operable facility.

The plant designs are based on using components suitable for a 30-year life, with provision for periodic maintenance and replacement of critical parts. All equipment is based on compliance with the latest applicable codes and standards. ASME, ANSI, IEEE, NFPA, CAA, state regulations, and OSHA codes are all adhered to in the design approach.

IGCC Plant Designs

The Case 2 IGCC plant designs used to analyze the full range of potential CO_2 capture levels are shown in Exhibit 4-14. While each of these plant designs includes the process and ancillary equipment described in Section 4.2, the designs are unique in terms of the WGS and AGR sections. In particular, the WGS section, as described below, is different for each plant design.

- D1 has no WGS reactor. The minimum (0 percent) and maximum (25 percent) CO_2 capture levels for this particular configuration are modeled. Due to the high level of integration between the H_2S and CO_2 absorbers, it is not feasible to model no CO_2 capture with a two-stage Selexol™ system. Consequently, D1A (0 percent capture) employs a one-stage Selexol™ unit for H_2S control, while D1B (25 percent capture) utilizes a two-stage Selexol™ unit to maximize CO_2 capture from the unshifted syngas. D1 includes a COS hydrolysis unit to treat the entire syngas stream.
- D2 has one-stage WGS with CO_2 capture ranging from 25 percent (upper limit from D1) to the maximum achievable limit for this particular configuration (75 percent) by varying the WGS bypass ratio and the two-stage Selexol™ CO_2 removal efficiency. The Selexol™ removal efficiency is changed by varying the solvent circulation rate, which changes the size and cost of the Selexol™ system. The combined syngas stream (shifted and unshifted gas) is routed through a COS hydrolysis unit.
- D3 has two-stage WGS with CO_2 capture ranging from 25 percent (upper limit from D1) to the maximum achievable limit for this particular configuration (85 percent) by varying the WGS bypass ratio and the two-stage Selexol™ CO_2 removal efficiency. The Selexol™ removal efficiency is changed by varying the solvent circulation rate, which changes the size and cost of the Selexol™ system. The WGS bypass stream passes through a COS hydrolysis unit.
- D4 has two-stage WGS and no bypass with CO_2 capture ranging from 90 to 97 percent. To achieve greater than 90 percent CO_2 removal, the two-stage Selexol™ CO_2 removal efficiency is increased by raising the solvent circulation rate, which increases the size and cost of the Selexol™ system. D4 does not include a COS hydrolysis unit since sufficient COS to H_2S conversion occurs across the two WGS reactors.

Exhibit 4-14 Case 2 GEE IGCC Plant Configuration Summary

Case	CO_2 Capture	CO_2 Separation	Intended Storage	Gasifier	Steam psig/°F/°F	Oxidant	WGS	Sulfur Control
D1A	0%	N/A	N/A	GEE Radiant Only	1800/1050/1050	95 mol% O_2	N/A	Selexol™
D1B	25%	Selexol™ 2nd Stage	Saline Formation				N/A	
D2A	25%						One-Stage with bypass	
D2B	45%							
D2C	60%							
D2D	75%							
D3A	25%						Two-Stage with bypass	
D3B	45%							
D3C	60%							
D3D	75%							
D3E	85%							
D4A	90%						Two-Stage without bypass	
D4B	95%							
D4C	97%							

4.3.1 IGCC Design 1 – Without Water Gas Shift

Design 1 (D1) represents an IGCC plant without WGS reactors. As a result, the entire syngas stream is passed through a COS hydrolysis unit to ensure that the low sulfur levels required by local permitting agencies (this analysis assumes 0.0128 lb SO_2/MMBtu) are achieved.

The Case 2 D1 analysis involves the development of cost and performance estimates for no CO_2 capture (D1A) and the maximum level of CO_2 removal (25 percent) that can be achieved without WGS (D1B). Due to the high level of integration between the H_2S and CO_2 absorbers in the two-stage Selexol™ system (see Exhibit 4-8), it is assumed in this analysis that it is not possible to operate the two stages independently, and therefore is not feasible to model 0 percent CO_2 capture with this system. Since the first stage is designed to operate synergistically with the second, some level of CO_2 removal is unavoidable. Consequently, D1A (0 percent capture) employs a one-stage Selexol™ unit for H_2S control, while D1B (25 percent capture) utilizes a two-stage Selexol™ unit to maximize CO_2 capture from the unshifted syngas.

The process block flow diagram for Case 2 D1A is shown in Exhibit 4-15. This process results in no CO_2 removal since a one-stage Selexol™ unit is employed exclusively for H_2S removal. Case 2 D1A also includes air integration between the ASU and CT (stream 21) where about 4 percent of the pressurized CT air supply is extracted, accounting for approximately 16.8 percent of the total ASU air requirement. The corresponding stream tables for Case 2 D1A are contained in Exhibit 4-16.

The process block flow diagram for Case 2 D1B is shown in Exhibit 4-17. To maximize CO_2 removal, this process employs a two-stage Selexol™ unit for selective H_2S removal and bulk CO_2 capture. Note that D1B does not include air integration between the ASU and CT, which, along with a different heat integration scheme, explains the decreased coal feed rate observed for D1B. The corresponding stream tables for Case 2 D1B are contained in Exhibit 4-18.

Overall performance for Case 2-D1 is summarized in Exhibit 4-19 which includes auxiliary power requirements.

Material and energy balance information, environmental performance and a major equipment list are summarized in Sections 4.3.1.1 and 4.3.1.2.

Exhibit 4-15 Case 2 D1A Process Block Flow Diagram, IGCC without WGS (0% CO_2 Removal)

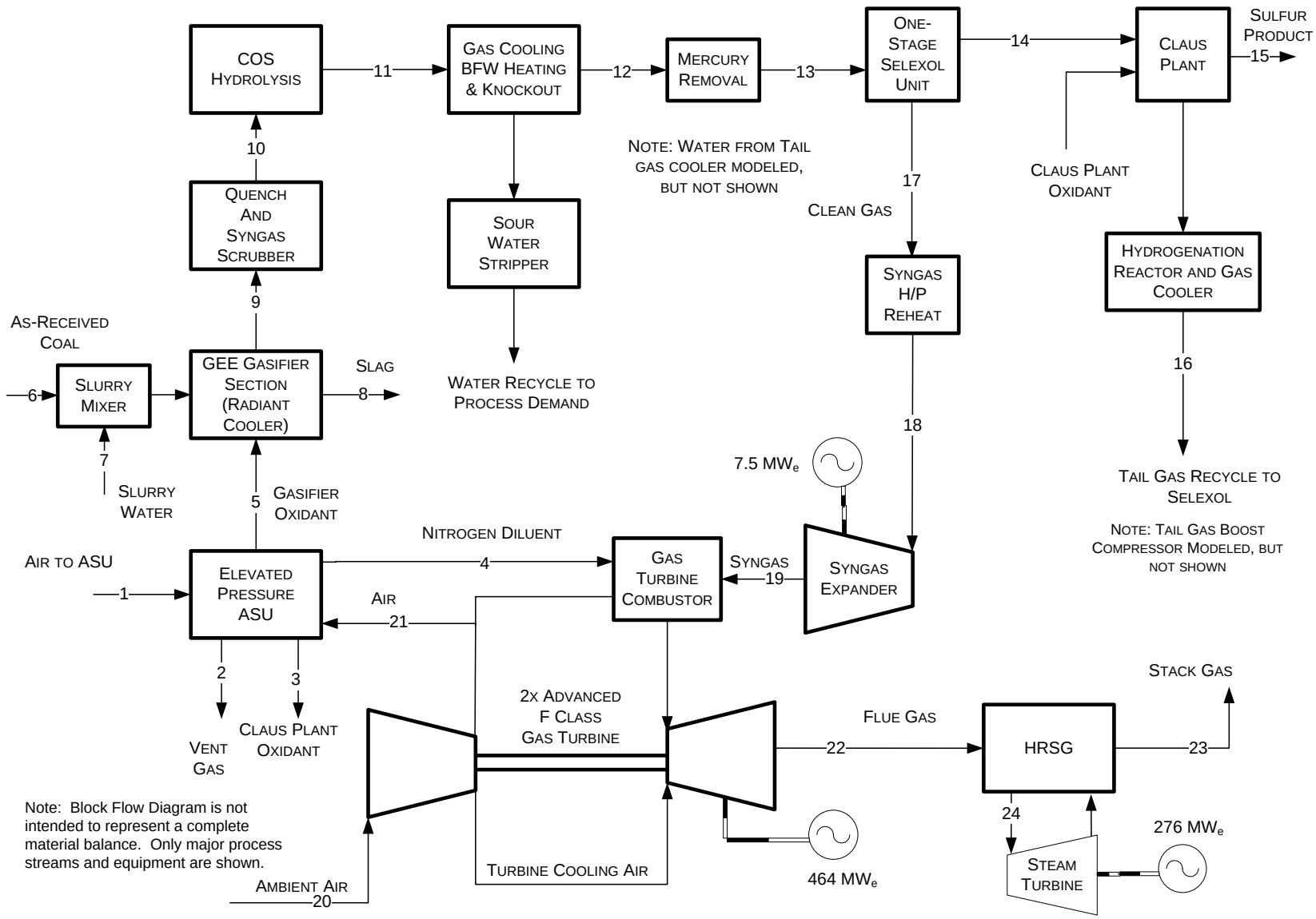

Note: Block Flow Diagram is not intended to represent a complete material balance. Only major process streams and equipment are shown.

Exhibit 4-16 Case 2 D1A Stream Table, IGCC without CO_2 Capture

	1	2	3	4	5	6	7	8	9	10	11	12
V-L Mole Fraction												
Ar	0.0092	0.0237	0.0318	0.0023	0.0318	0.0000	0.0000	0.0000	0.0086	0.0068	0.0068	0.0099
CH_4	0.0000	0.0000	0.0000	0.0000	0.0000	0.0000	0.0000	0.0000	0.0012	0.0009	0.0009	0.0013
CO	0.0000	0.0000	0.0000	0.0000	0.0000	0.0000	0.0000	0.0000	0.3579	0.2825	0.2825	0.4151
CO_2	0.0003	0.0082	0.0000	0.0000	0.0000	0.0000	0.0000	0.0000	0.1366	0.1078	0.1079	0.1586
COS	0.0000	0.0000	0.0000	0.0000	0.0000	0.0000	0.0000	0.0000	0.0002	0.0001	0.0000	0.0000
H_2	0.0000	0.0000	0.0000	0.0000	0.0000	0.0000	0.0000	0.0000	0.3416	0.2696	0.2696	0.3961
H_2O	0.0099	0.2114	0.0000	0.0003	0.0000	0.0000	0.9994	0.0000	0.1358	0.3181	0.3180	0.0012
HCl	0.0000	0.0000	0.0000	0.0000	0.0000	0.0000	0.0000	0.0000	0.0008	0.0002	0.0002	0.0000
H_2S	0.0000	0.0000	0.0000	0.0000	0.0000	0.0000	0.0000	0.0000	0.0073	0.0057	0.0059	0.0085
N_2	0.7732	0.5553	0.0178	0.9919	0.0178	0.0000	0.0000	0.0000	0.0080	0.0063	0.0063	0.0092
NH_3	0.0000	0.0000	0.0000	0.0000	0.0000	0.0000	0.0006	0.0000	0.0021	0.0020	0.0020	0.0000
O_2	0.2074	0.2015	0.9504	0.0054	0.9504	0.0000	0.0000	0.0000	0.0000	0.0000	0.0000	0.0000
SO_2	0.0000	0.0000	0.0000	0.0000	0.0000	0.0000	0.0000	0.0000	0.0000	0.0000	0.0000	0.0000
Total	1.0000	1.0000	1.0000	1.0000	1.0000	0.0000	1.0000	0.0000	1.0000	1.0000	1.0000	1.0000
V-L Flowrate (kg_{mol}/hr)	21,870	1,050	102	19,395	5,297	0	4,829	0	22,210	28,140	28,140	19,152
V-L Flowrate (kg/hr)	631,092	28,469	3,288	544,226	170,471	0	86,993	0	445,994	552,546	552,546	390,561
Solids Flowrate (kg/hr)	0	0	0	0	0	211,765	0	23,234	0	0	0	0
Temperature (°C)	15	20	32	93	32	15	146	1,316	677	223	223	35
Pressure (MPa, abs)	0.10	0.11	0.86	2.65	0.86	0.10	5.79	5.62	5.55	5.48	5.41	5.24
Enthalpy (kJ/kg)[A]	30.23	36.86	26.67	92.52	26.67	---	558.58	---	1,424.13	1,066.72	1,066.62	40.35
Density (kg/m^3)	1.2	1.6	11.0	24.4	11.0	---	866.9	---	13.9	26.7	26.3	41.9
V-L Molecular Weight	28.857	27.117	32.181	28.060	32.181	---	18.015	---	20.081	19.636	19.636	20.393
V-L Flowrate (lb_{mol}/hr)	48,214	2,315	225	42,759	11,679	0	10,646	0	48,965	62,037	62,037	42,222
V-L Flowrate (lb/hr)	1,391,319	62,763	7,248	1,199,813	375,823	0	191,787	0	983,248	1,218,155	1,218,155	861,041
Solids Flowrate (lb/hr)	0	0	0	0	0	466,861	0	51,223	0	0	0	0
Temperature (°F)	59	68	90	199	90	59	295	2,400	1,250	433	433	95
Pressure (psia)	14.7	16.4	125.0	384.0	125.0	14.7	840.0	815.0	805.0	795.0	785.0	760.0
Enthalpy (Btu/lb)[A]	13.0	15.8	11.5	39.8	11.5	---	240.1	---	612.3	458.6	458.6	17.3
Density (lb/ft^3)	0.076	0.098	0.687	1.521	0.687	---	54.120	---	0.870	1.665	1.643	2.617

A - Reference conditions are 32.02 F & 0.089 PSIA

Exhibit 4-16 Case 2 D1A Stream Table, IGCC without CO2 Capture (continued)

	13	14	15	16	17	18	19	20	21	22	23	24
V-L Mole Fraction												
Ar	0.0097	0.0000	0.0000	0.0040	0.0100	0.0100	0.0100	0.0092	0.0092	0.0089	0.0089	0.0000
CH_4	0.0013	0.0000	0.0000	0.0000	0.0013	0.0013	0.0013	0.0000	0.0000	0.0000	0.0000	0.0000
CO	0.3977	0.0002	0.0000	0.0021	0.4089	0.4089	0.4089	0.0000	0.0000	0.0000	0.0000	0.0000
CO_2	0.1811	0.6125	0.0000	0.6947	0.1562	0.1562	0.1562	0.0003	0.0003	0.0807	0.0807	0.0000
COS	0.0000	0.0000	0.0000	0.0001	0.0000	0.0000	0.0000	0.0000	0.0000	0.0000	0.0000	0.0000
H_2	0.3812	0.0000	0.0000	0.0414	0.3920	0.3920	0.3920	0.0000	0.0000	0.0000	0.0000	0.0000
H_2O	0.0012	0.0128	0.0000	0.0018	0.0006	0.0006	0.0006	0.0099	0.0099	0.0638	0.0638	1.0000
HCl	0.0000	0.0000	0.0000	0.0000	0.0000	0.0000	0.0000	0.0000	0.0000	0.0000	0.0000	0.0000
H_2S	0.0086	0.1816	0.0000	0.0111	0.0000	0.0000	0.0000	0.0000	0.0000	0.0000	0.0000	0.0000
N_2	0.0191	0.1905	0.0000	0.2448	0.0309	0.0309	0.0309	0.7732	0.7732	0.7427	0.7427	0.0000
NH_3	0.0000	0.0000	0.0000	0.0000	0.0000	0.0000	0.0000	0.0000	0.0000	0.0000	0.0000	0.0000
O_2	0.0000	0.0023	0.0000	0.0000	0.0000	0.0000	0.0000	0.2074	0.2074	0.1039	0.1039	0.0000
SO_2	0.0000	0.0000	0.0000	0.0000	0.0000	0.0000	0.0000	0.0000	0.0000	0.0000	0.0000	0.0000
Total	1.0000	1.0000	0.0000	1.0000	1.0000	1.0000	1.0000	1.0000	1.0000	1.0000	1.0000	1.0000
V-L Flowrate (kg_{mol}/hr)	19,990	950	0	839	19,444	19,444	19,444	110,253	4,410	136,896	136,896	35,591
V-L Flowrate (kg/hr)	422,555	36,875	0	31,993	397,017	397,017	397,017	3,181,557	127,262	3,995,539	3,995,539	641,191
Solids Flowrate (kg/hr)	0	0	5,302	0	0	0	0	0	0	0	0	0
Temperature (°C)	35	45	174	38	45	241	196	15	432	589	132	561
Pressure (MPa, abs)	5.21	5.2	0.409	5.512	5.171	5.136	3.172	0.101	1.619	0.105	0.105	12.512
Enthalpy (kJ/kg)[A]	36.92	-1.2	---	-5.043	54.552	365.188	296.112	30.227	463.785	741.334	235.099	3,502.568
Density (kg/m^3)	43.4	95.0	5,288.2	97.7	40.0	24.1	16.4	1.2	7.9	0.4	0.9	35.1
V-L Molecular Weight	21.138	39	---	38.147	20.419	20.419	20.419	28.857	28.857	29.187	29.187	18.015
V-L Flowrate (lb_{mol}/hr)	44,071	2,095	0	1,849	42,866	42,866	42,866	243,066	9,723	301,803	301,803	78,466
V-L Flowrate (lb/hr)	931,574	81,295	0	70,533	875,273	875,273	875,273	7,014,133	280,565	8,808,656	8,808,656	1,413,583
Solids Flowrate (lb/hr)	0	0	11,688	0	0	0	0	0	0	0	0	0
Temperature (°F)	94	112	345	100	112	465	386	59	810	1,092	270	1,042
Pressure (psia)	755.0	750.0	59.3	799.5	750.0	745.0	460.0	14.7	234.9	15.2	15.2	1,814.7
Enthalpy (Btu/lb)[A]	15.9	-0.5	---	-2.2	23.5	157.0	127.3	13.0	199.4	318.7	101.1	1,505.8
Density (lb/ft^3)	2.712	6	330.129	6.098	2.499	1.508	1.026	0.076	0.495	0.027	0.057	2.192

A - Reference conditions are 32.02 F & 0.089 PSIA

Exhibit 4-17 Case 2 D1B Process Block Flow Diagram, IGCC without WGS (25% CO_2 Removal)

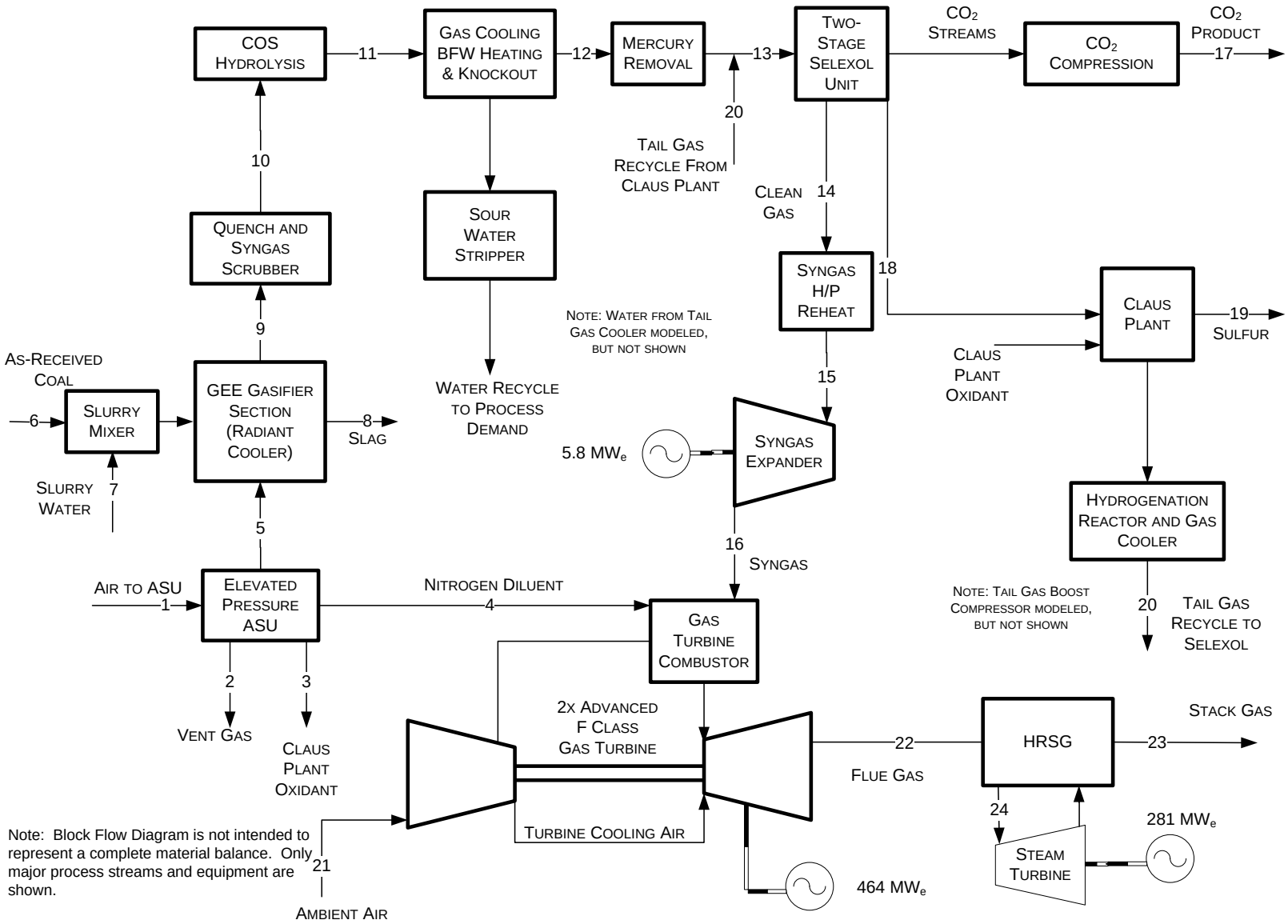

Exhibit 4-18 Case 2 D1B Stream Table, IGCC with 25% CO_2 Capture

	1	2	3	4	5	6	7	8	9	10	11	12
V-L Mole Fraction												
Ar	0.0092	0.0140	0.0318	0.0023	0.0318	0.0000	0.0000	0.0000	0.0086	0.0068	0.0068	0.0100
CH_4	0.0000	0.0000	0.0000	0.0000	0.0000	0.0000	0.0000	0.0000	0.0011	0.0009	0.0009	0.0013
CO	0.0000	0.0000	0.0000	0.0000	0.0000	0.0000	0.0000	0.0000	0.3576	0.2820	0.2820	0.4151
CO_2	0.0003	0.0044	0.0000	0.0000	0.0000	0.0000	0.0000	0.0000	0.1380	0.1088	0.1090	0.1604
COS	0.0000	0.0000	0.0000	0.0000	0.0000	0.0000	0.0000	0.0000	0.0002	0.0001	0.0000	0.0000
H_2	0.0000	0.0000	0.0000	0.0000	0.0000	0.0000	0.0000	0.0000	0.3406	0.2686	0.2686	0.3954
H_2O	0.0099	0.1107	0.0000	0.0003	0.0000	0.0000	0.9995	0.0000	0.1369	0.3197	0.3195	0.0012
HCl	0.0000	0.0000	0.0000	0.0000	0.0000	0.0000	0.0000	0.0000	0.0008	0.0002	0.0002	0.0000
H_2S	0.0000	0.0000	0.0000	0.0000	0.0000	0.0000	0.0000	0.0000	0.0073	0.0057	0.0059	0.0086
N_2	0.7732	0.7598	0.0178	0.9920	0.0178	0.0000	0.0000	0.0000	0.0070	0.0055	0.0055	0.0081
NH_3	0.0000	0.0000	0.0000	0.0000	0.0000	0.0000	0.0005	0.0000	0.0019	0.0016	0.0016	0.0000
O_2	0.2074	0.1112	0.9504	0.0054	0.9504	0.0000	0.0000	0.0000	0.0000	0.0000	0.0000	0.0000
SO_2	0.0000	0.0000	0.0000	0.0000	0.0000	0.0000	0.0000	0.0000	0.0000	0.0000	0.0000	0.0000
Total	1.0000	1.0000	1.0000	1.0000	1.0000	0.0000	1.0000	0.0000	1.0000	1.0000	1.0000	1.0000
V-L Flowrate (kg_{mol}/hr)	26,011	1,933	94	18,697	5,251	0	4,786	0	21,971	27,854	27,854	18,924
V-L Flowrate (kg/hr)	750,612	53,323	3,014	524,635	168,970	0	86,227	0	442,069	547,801	547,801	386,853
Solids Flowrate (kg/hr)	0	0	0	0	0	209,901	0	23,030	0	0	0	0
Temperature (°C)	15	17	32	93	32	15	142	1,316	677	212	212	35
Pressure (MPa, abs)	0.10	0.11	0.86	2.65	0.86	0.10	5.79	5.62	5.55	5.48	5.41	5.14
Enthalpy (kJ/kg)[A]	30.23	35.12	26.67	92.50	26.67	---	537.77	---	1,424.65	1,049.10	1,049.00	40.01
Density (kg/m^3)	1.2	1.4	11.0	24.4	11.0	---	872.0	---	14.0	27.4	27.0	41.3
V-L Molecular Weight	28.857	27.587	32.181	28.060	32.181	---	18.015	---	20.121	19.667	19.667	20.443
V-L Flowrate (lb_{mol}/hr)	57,346	4,261	206	41,220	11,576	0	10,552	0	48,437	61,407	61,407	41,720
V-L Flowrate (lb/hr)	1,654,817	117,556	6,645	1,156,623	372,515	0	190,099	0	974,594	1,207,695	1,207,695	852,865
Solids Flowrate (lb/hr)	0	0	0	0	0	462,752	0	50,772	0	0	0	0
Temperature (°F)	59	63	90	199	90	59	287	2,400	1,250	413	413	95
Pressure (psia)	14.7	16.4	125.0	384.0	125.0	14.7	840.0	815.0	805.0	795.0	785.0	745.0
Enthalpy (Btu/lb)[A]	13.0	15.1	11.5	39.8	11.5	---	231.2	---	612.5	451.0	451.0	17.2
Density (lb/ft^3)	0.076	0.089	0.687	1.521	0.687	---	54.440	---	0.871	1.710	1.688	2.575

A - Reference conditions are 32.02 F & 0.089 PSIA

Exhibit 4-18 Case 2 D1B Stream Table, IGCC with 25% CO2 Capture (continued)

	13	14	15	16	17	18	19	20	21	22	23	24
V-L Mole Fraction												
Ar	0.0101	0.0118	0.0118	0.0118	0.0006	0.0037	0.0000	0.0228	0.0092	0.0091	0.0091	0.0000
CH_4	0.0013	0.0015	0.0015	0.0015	0.0002	0.0009	0.0000	0.0000	0.0000	0.0000	0.0000	0.0000
CO	0.4114	0.4813	0.4813	0.4813	0.0257	0.1675	0.0000	0.0031	0.0000	0.0000	0.0000	0.0000
CO_2	0.1611	0.0260	0.0260	0.0260	0.9648	0.0000	0.0000	0.2380	0.0003	0.0599	0.0599	0.0000
COS	0.0000	0.0000	0.0000	0.0000	0.0000	0.0000	0.0000	0.0000	0.0000	0.0000	0.0000	0.0000
H_2	0.3973	0.4685	0.4685	0.4685	0.0085	0.1031	0.0000	0.6146	0.0000	0.0000	0.0000	0.0000
H_2O	0.0012	0.0001	0.0001	0.0001	0.0000	0.0310	0.0000	0.0013	0.0099	0.0632	0.0632	1.0000
HCl	0.0000	0.0000	0.0000	0.0000	0.0000	0.0000	0.0000	0.0000	0.0000	0.0000	0.0000	0.0000
H_2S	0.0085	0.0000	0.0000	0.0000	0.0001	0.6923	0.0000	0.0036	0.0000	0.0000	0.0000	0.0000
N_2	0.0091	0.0108	0.0108	0.0108	0.0001	0.0016	0.0000	0.1165	0.7732	0.7566	0.7566	0.0000
NH_3	0.0000	0.0000	0.0000	0.0000	0.0000	0.0000	0.0000	0.0000	0.0000	0.0000	0.0000	0.0000
O_2	0.0000	0.0000	0.0000	0.0000	0.0000	0.0000	0.0000	0.0000	0.2074	0.1112	0.1112	0.0000
SO_2	0.0000	0.0000	0.0000	0.0000	0.0000	0.0000	0.0000	0.0000	0.0000	0.0000	0.0000	0.0000
Total	1.0000	1.0000	1.0000	1.0000	1.0000	1.0000	0.0000	1.0000	1.0000	1.0000	1.0000	1.0000
V-L Flowrate (kg_{mol}/hr)	19,096	16,093	16,093	16,093	2,754	235	0	173	110,253	137,400	137,400	35,014
V-L Flowrate (kg/hr)	389,636	263,433	263,433	263,433	119,071	6,868	0	2,783	3,181,557	3,969,626	3,969,626	630,792
Solids Flowrate (kg/hr)	0	0	0	0	0	0	5,253	0	0	0	0	0
Temperature (°C)	35	35	241	197	64	48	182	38	15	582	132	554
Pressure (MPa, abs)	5.1	4.999	4.964	3.172	15.270	0.163	0.119	5.512	0.101	0.105	0.105	12.512
Enthalpy (kJ/kg)[A]	40.2	54.462	434.577	354.231	-107.672	100.083	---	59.876	30.227	733.067	235.743	3,484.156
Density (kg/m^3)	40.9	31.5	18.7	13.1	480.9	1.8	5,270.3	34.5	1.2	0.4	0.9	35.5
V-L Molecular Weight	20	16.370	16.370	16.370	43.231	29.259	---	16.124	28.857	28.891	28.891	18.015
V-L Flowrate (lb_{mol}/hr)	42,100	35,478	35,478	35,478	6,072	517	0	381	243,066	302,915	302,915	77,193
V-L Flowrate (lb/hr)	859,001	580,771	580,771	580,771	262,506	15,141	0	6,136	7,014,133	8,751,528	8,751,528	1,390,658
Solids Flowrate (lb/hr)	0	0	0	0	0	0	11,581	0	0	0	0	0
Temperature (°F)	95	95	465	387	147	119	360	100	59	1,080	270	1,030
Pressure (psia)	740.0	725.0	720.0	460.0	2,214.7	23.7	17.3	799.5	14.7	15.2	15.2	1,814.7
Enthalpy (Btu/lb)[A]	17.3	23.4	186.8	152.3	-46.3	43.0	---	25.7	13.0	315.2	101.4	1,497.9
Density (lb/ft^3)	3	1.969	1.166	0.819	30.024	0.112	329.017	2.152	0.076	0.027	0.056	2.218

A - Reference conditions are 32.02 F & 0.089 PSIA

Exhibit 4-19 Case 2 D1 Performance Modeling Results

POWER SUMMARY (Gross Power at Generator Terminals, kWe)	D1A (0%)	D1B (25%)
Gas Turbine Power	464,000	464,000
Sweet Gas Expander Power	7,500	5,800
Steam Turbine Power	276,300	280,600
Total	**747,800**	**750,400**
AUXILIARY LOAD SUMMARY, kWe		
Coal Handling	459	457
Coal Milling	2,178	2,159
Sour Water Recycle Slurry Pump	183	181
Slag Handling	1,115	1,106
Air Separation Unit Auxiliaries	1,000	1,000
Air Separation Unit Main Air Compressor	53,817	64,010
Oxygen Compressor	10,255	10,164
Nitrogen Compressors	33,370	31,386
CO_2 Compressor	0	8,410
Boiler Feedwater Pumps	3,975	3,968
Condensate Pump	235	249
Quench Water Pump	519	513
Circulating Water Pump	4,204	4,165
Ground Water Pumps	428	425
Cooling Tower Fans	2,172	2,152
Scrubber Pumps	216	212
Acid Gas Removal	2,588	4,807
Gas Turbine Auxiliaries	1,000	1,000
Steam Turbine Auxiliaries	100	100
Claus Plant/TGTU Auxiliaries	250	250
Claus Plant TG Recycle Compressor	2,085	828
Miscellaneous Balance of Plant [1]	3,000	3,000
Transformer Losses	2,606	2,666
TOTAL AUXILIARIES, kWe	**125,755**	**143,208**
NET POWER, kWe	**622,045**	**607,192**
Net Plant Efficiency, % (HHV)	39.0%	38.4%
Net Plant Heat Rate, kJ/kWh (Btu/kWh)	9,238 (8,756)	9,380 (8,891)
Condenser Duty, GJ/hr (10^6 Btu/hr)	1,540 (1,460)	1,625 (1,540)
CONSUMABLES		
As-Received Coal Feed, kg/hr (lb/hr)	211,765 (466,861)	209,901 (462,752)
Thermal Input, kW_{th} [2]	1,596,183	1,582,134
Raw Water Withdrawal, m^3/min (gpm)	17.9 (4,734)	17.8 (4,692)
Raw Water Consumption, m^3/min (gpm)	14.2 (3,755)	14.1 (3,722)

Notes:
1. Includes plant control systems, lighting, HVAC, and miscellaneous low voltage loads
2. HHV of As Received Illinois No. 6 coal is 27,135 kJ/kg (11,666 Btu/lb)

4.3.1.1 Environmental Performance for Case 2 D1A and D1B

The environmental targets for emissions of Hg, NO_x, SO_2, and particulate matter were presented in Section 2.4. A summary of the plant air emissions for Case 2 D1A and D1B is presented in Exhibit 4-20.

For Case 2 D1A and D1B, SO_2 emissions are controlled by sulfur capture across the one-stage and two-stage Selexol™ AGR processes, respectively. The one-stage Selexol™ unit removes over 99 percent of the sulfur compounds in the fuel gas down to a level of less than 15 ppmv, resulting in a concentration in the flue gas of less than 3 ppmv. For D1B, the clean syngas exiting the two-stage Selexol™ unit has a sulfur concentration of less than 10 ppmv, resulting in a concentration in the flue gas of less than 2 ppmv. The H_2S-rich regeneration gas produced in both D1A and D1B is fed to a Claus plant, producing elemental sulfur. The Claus plant tail gas is hydrogenated to convert all sulfur species to H_2S and then recycled back to the Selexol™ unit, thereby eliminating the need for a tail gas treatment unit.

For both D1A and D1B, NOx emissions are limited by nitrogen dilution of the syngas to 15 ppmvd (as NO_2 @ 15 percent O_2). Ammonia in the syngas is removed with process condensate prior to the low-temperature AGR process, and ultimately incinerated in the Claus plant burner. This also assists in lowering NOx levels.

Particulate discharge to the atmosphere for D1A and D1B is limited to extremely low values by the use of the syngas quench in addition to the syngas scrubber and the gas washing effect of the AGR absorber. The particulate emissions represent filterable particulate only.

Ninety-five percent of the mercury is captured from the syngas by an activated carbon bed.

For D1A, CO_2 emissions represent the uncontrolled discharge from the process. The carbon balance for D1A is shown in Exhibit 4-21. The carbon input to the plant consists of carbon in the air and coal. Carbon in the air is not neglected here since the Aspen Plus® model accounts for air components throughout. Carbon leaves the plant as unburned carbon in the slag, as dissolved CO_2 in the wastewater blowdown stream, and as CO_2 in the stack gas and ASU vent gas. Carbon in the wastewater blowdown stream is calculated by difference to close the material balance.

Twenty-five percent of the CO_2 from the syngas in D1B is captured in the two-stage Selexol™ unit and compressed for sequestration. The carbon balance for D1B is also shown in Exhibit 4-21. The carbon input to the plant consists of carbon in the air and coal. Carbon in the air is not neglected here since the Aspen model accounts for air components throughout. Carbon leaves the plant as unburned carbon in the slag, as dissolved CO_2 in the wastewater blowdown stream, and as CO_2 in the stack gas, ASU vent gas, and the captured CO_2 product. Carbon in the wastewater blowdown stream is calculated by difference to close the material balance. The carbon capture efficiency is defined as the pounds of carbon in the CO_2 product stream relative to the amount of carbon in the coal, less carbon contained in the slag, represented by the following fraction:

$$(\text{Carbon in } CO_2 \text{ Product})/[(\text{Carbon in the Coal})-(\text{Carbon in Slag})] \text{ or}$$
$$72{,}256/(294{,}980-5{,}900)*100 = 25.0\%$$

Exhibit 4-22 shows the sulfur balance for Case 2 D1A and D1B. Sulfur input comes solely from the sulfur in the coal. Sulfur output includes the pounds of sulfur recovered in the Claus plant, dissolved SO_2 in the wastewater blowdown stream, and sulfur emitted in the stack gas. Sulfur in the slag is considered to be negligible, and the sulfur content of the blowdown stream is calculated by difference to close the material balance. The total sulfur capture is represented by the following fraction:

(Sulfur byproduct/Sulfur in the coal) or
(11,688/11,701)*100 = 99.8% (D1A)
(11,581/11,598)*100 = 99.8% (D1B)

The overall water balances for Case 2 D1A and D1B are shown in Exhibit 4-23 and Exhibit 4-24, respectively. Raw water is obtained from groundwater (50 percent) and from municipal sources (50 percent). Water demand represents the total amount of water required for a particular process. Some water is recovered within the process and that water is reused as internal recycle. Raw water withdrawal is the difference between water demand and internal recycle. Process water discharged from the power plant is also accounted for in this study. Raw water consumption represents raw water withdrawal less process water discharge.

Heat and Mass Balance Diagrams

Heat and mass balance diagrams are shown for the following subsystems in Exhibit 4-25 through Exhibit 4-30.

- Gasifier and ASU
- Syngas Cleanup
- Power Block

An overall plant energy balance is provided in tabular form for Case 2 D1A and D1B in Exhibit 4-31 and Exhibit 4-32, respectively. The power out is the combined combustion turbine, steam turbine and expander power after generator losses. In addition, energy balance Sankey diagrams are provided for D1A and D1B in Exhibit 4-33 and Exhibit 4-34, respectively.

Exhibit 4-20 Case 2 D1 Estimated Air Emission Rates

	kg/GJ (lb/10^6 Btu)		Tonne/year (ton/year) 85% capacity factor		kg/MWh (lb/MWh)	
	D1A	D1B	D1A	D1B	D1A	D1B
SO_2	0.002 (0.005)	0.001 (0.002)	84 (93)	37 (40)	0.016 (0.04)	0.007 (0.02)
NO_X	0.025 (0.059)	0.024 (0.055)	1,023 (1,128)	947 (1,044)	0.195 (0.430)	0.180 (0.397)
PM	0.003 (0.0071)	0.003 (0.0071)	123 (135)	122 (134)	0.023 (0.052)	0.023 (0.051)
Hg	0.246×10^{-6} (0.571×10^{-6})	0.246×10^{-6} (0.571×10^{-6})	0.010 (0.011)	0.010 (0.011)	1.89×10^{-6} (4.16×10^{-6})	1.87×10^{-6} (4.11×10^{-6})
CO_2	84.6 (196.8)	63.5 (147.8)	3,407,608 (3,756,245)	2,536,560 (2,796,079)	650 (1,434)	482 (1,063)
CO_2 net					782 (1,723)	596 (1,314)

Exhibit 4-21 Case 2 D1 Carbon Balance

Carbon In, kg/hr (lb/hr)		
	D1A	**D1B**
Coal	134,989 (297,599)	133,801 (294,980)
Air (CO_2)	518 (1,143)	535 (1,179)
Total	**135,507 (298,742)**	**134,336 (296,159)**
Carbon Out, kg/hr (lb/hr)		
Slag	2,700 (5,952)	2,676 (5,900)
Stack Gas	132,704 (292,563)	98,783 (217,779)
ASU Vent	103 (227)	102 (225)
CO_2 Product	0 (0)	32,775 (72,256)
Convergence Tolerance	0 (0)	0 (-1)
Total	**135,507 (298,742)**	**134,336 (296,159)**

Exhibit 4-22 Case 2 D1 Sulfur Balance

Sulfur In, kg/hr (lb/hr)		
	D1A	**D1B**
Coal	5,308 (11,701)	5,261 (11,598)
Total	**5,308 (11,701)**	**5,261 (11,598)**
Sulfur Out, kg/hr (lb/hr)		
Elemental Sulfur	5,302 (11,688)	5,253 (11,581)
Stack Gas	6 (13)	3 (6)
CO_2 Product	0 (0)	5 (12)
Convergence Tolerance	0 (0)	0 (-1)
Total	**5,308 (11,701)**	**5,261 (11,598)**

Exhibit 4-23 Case 2 D1A (0%) Water Balance

Water Use	Water Demand, m^3/min (gpm)	Internal Recycle, m^3/min (gpm)	Raw Water Withdrawal, m^3/min (gpm)	Process Water Discharge, m^3/min (gpm)	Raw Water Consumption, m^3/min (gpm)
Slag Handling	0.50 (133)	0.50 (133)	0.0 (0)	0.0 (0)	0.0 (0)
Quench/Wash	2.7 (726)	0.90 (237)	1.9 (489)	0.0 (0)	1.9 (489)
Humidifier	0.0 (0)	0.0 (0)	0.0 (0)	0.0 (0)	0.0 (0)
SWS Blowdown	0.0 (0)	0.0 (0)	0.0 (0)	0.03 (8)	-0.03 (-8)
Condenser Makeup	**0.2 (54)**	**0.0 (0)**	**0.2 (54)**	**0.0 (0)**	**0.2 (54)**
Gasifier Steam	0.0 (0)	0.0 (0)	0.0 (0)		
Shift Steam	0.0 (0)	0.0 (0)	0.0 (0)		
CT Steam Dilution	0.0 (0)	0.0 (0)	0.0 (0)		
BFW Makeup	0.20 (54)	0.0 (0)	0.20 (54)		
Cooling Tower	**16.4 (4,321)**	**0.49 (129)**	**15.9 (4,191)**	**3.7 (972)**	**12.2 (3,220)**
BFW Blowdown	0.0 (0)	0.20 (54)	-0.20 (-54)		
SWS Blowdown	0.0 (0)	0.29 (75)	-0.29 (-75)		
SWS Excess Water	0.0 (0)	0.0 (0)	0.0 (0)		
Humidifier Tower Blowdown	0.0 (0)	0.0 (0)	0.0 (0)		
Total	**21.3 (5,617)**	**3.34 (883)**	**17.9 (4,734)**	**3.7 (979)**	**14.2 (3,755)**
Total, gal/MWh_{net}	**542**	**85**	**457**	**94**	**362**

Exhibit 4-24 Case 2 D1B (25%) Water Balance

Water Use	Water Demand, m^3/min (gpm)	Internal Recycle, m^3/min (gpm)	Raw Water Withdrawal, m^3/min (gpm)	Process Water Discharge, m^3/min (gpm)	Raw Water Consumption, m^3/min (gpm)
Slag Handling	0.50 (132)	0.50 (132)	0.0 (0)	0.0 (0)	0.0 (0)
Quench/Wash	2.7 (719)	0.88 (232)	1.8 (487)	0.0 (0)	1.8 (487)
Humidifier	0.0 (0)	0.0 (0)	0.0 (0)	0.0 (0)	0.0 (0)
SWS Blowdown	0.0 (0)	0.0 (0)	0.0 (0)	0.03 (7)	-0.03 (-7)
Condenser Makeup	**0.2 (55)**	**0.0 (0)**	**0.2 (55)**	**0.0 (0)**	**0.2 (55)**
Gasifier Steam	0.0 (0)	0.0 (0)	0.0 (0)		
Shift Steam	0.0 (0)	0.0 (0)	0.0 (0)		
CT Steam Dilution	0.0 (0)	0.0 (0)	0.0 (0)		
BFW Makeup	0.21 (55)	0.0 (0)	0.21 (55)		
Cooling Tower	**16.2 (4,280)**	**0.49 (129)**	**15.7 (4,150)**	**3.6 (963)**	**12.1 (3,188)**
BFW Blowdown	0.0 (0)	0.21 (55)	-0.21 (-55)		
SWS Blowdown	0.0 (0)	0.28 (74)	-0.28 (-74)		
SWS Excess Water	0.0 (0)	0.0 (0)	0.0 (0)		
Humidifier Tower Blowdown	0.0 (0)	0.0 (0)	0.0 (0)		
Total	**21.1 (5,566)**	**3.31 (874)**	**17.8 (4,692)**	**3.7 (970)**	**14.1 (3,722)**
Total, gal/MWh_{net}	**550**	**86**	**464**	**96**	**368**

This page intentionally left blank

Exhibit 4-25 Case 2 D1A (0%) Heat and Mass Balance, GEE Gasifier and ASU

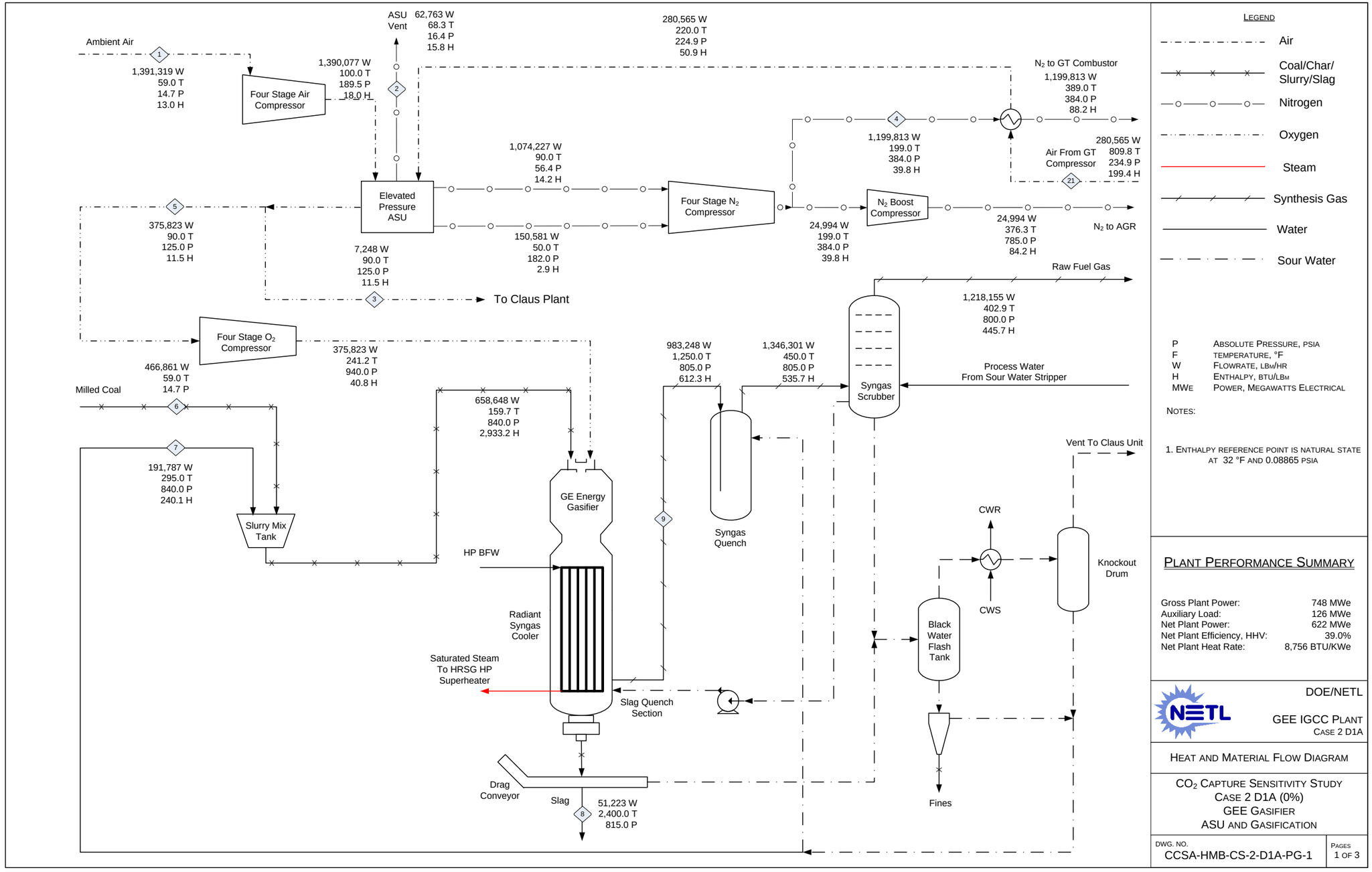

Exhibit 4-26 Case 2 D1A (0%) Heat and Mass Balance, Syngas Cleanup

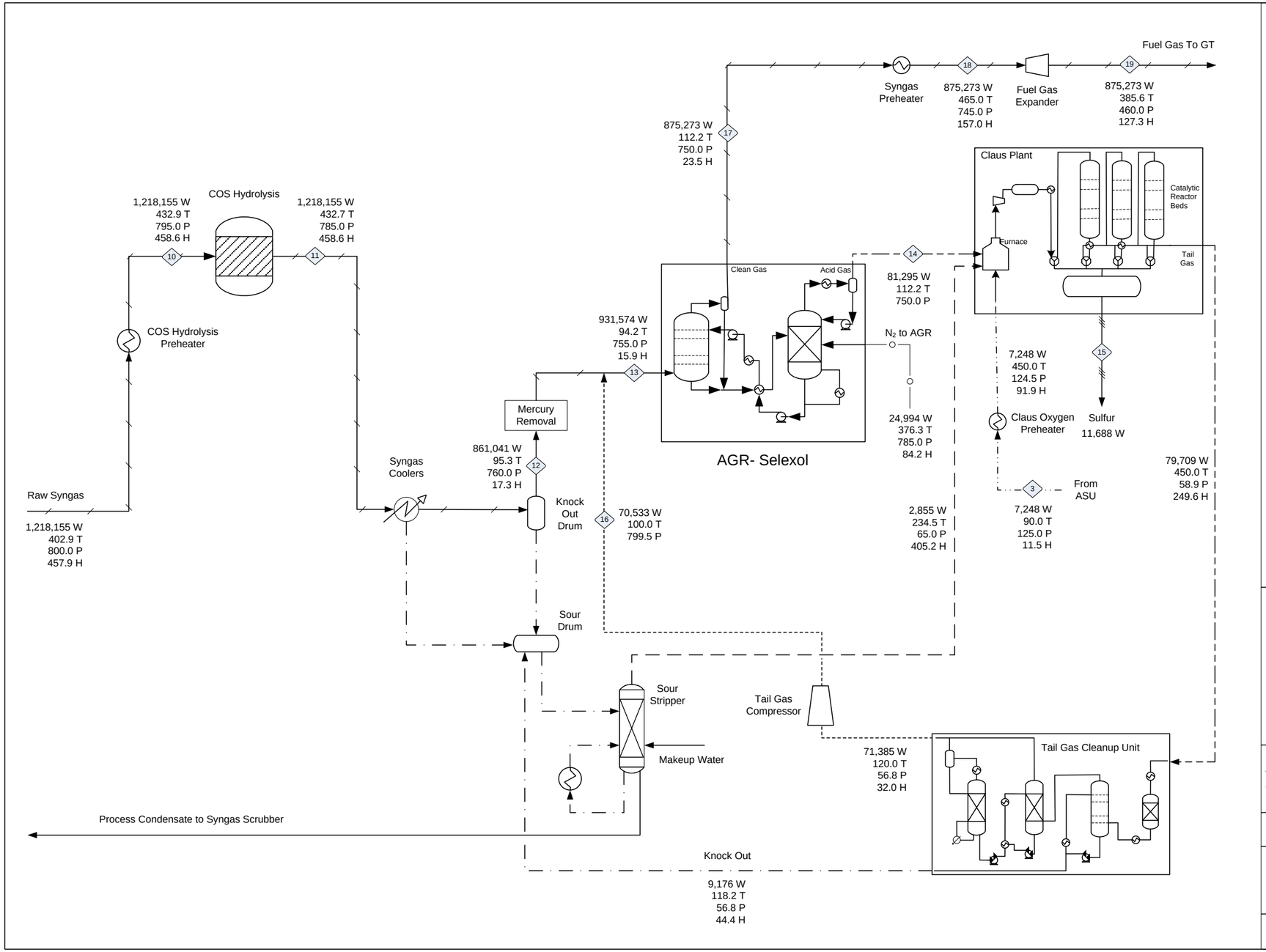

LEGEND

- Air
- Coal/Char/ Slurry/Slag
- Nitrogen
- Oxygen
- Sour Gas
- Sour Water
- Steam
- Synthesis Gas
- Water
- CO_2
- Tailgas

P ABSOLUTE PRESSURE, PSIA
F TEMPERATURE, °F
W FLOWRATE, LBM/HR
H ENTHALPY, BTU/LBM
MWE POWER, MEGAWATTS ELECTRICAL

NOTES:

1. ENTHALPY REFERENCE POINT IS NATURAL STATE AT 32 °F AND 0.08865 PSIA

PLANT PERFORMANCE SUMMARY

Gross Plant Power:	748 MWe
Auxiliary Load:	126 MWe
Net Plant Power:	622 MWe
Net Plant Efficiency, HHV:	39.0%
Net Plant Heat Rate:	8,756 BTU/KWe

DOE/NETL

GEE IGCC PLANT
CASE 2 D1A

HEAT AND MATERIAL FLOW DIAGRAM

CO_2 CAPTURE SENSITIVITY STUDY
CASE 2 D1A (0%)
GEE GASIFIER
GAS CLEANUP SYSTEM

DWG. NO. CCSA-HMB-CS-2-D1A-PG-2

PAGES 2 OF 3

Exhibit 4-27 Case 2 D1A (0%) Heat and Mass Balance, Power Block

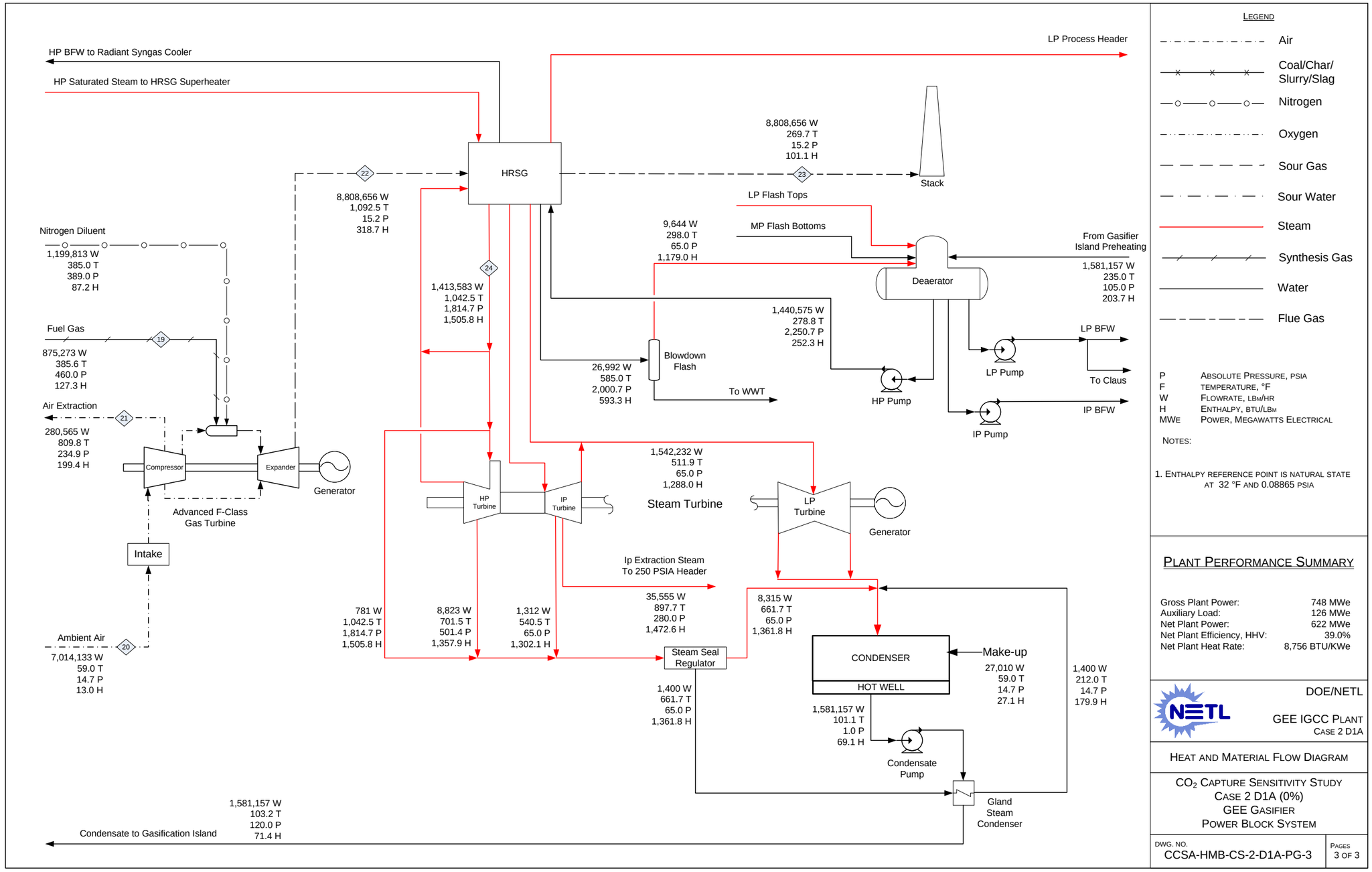

Exhibit 4-28 Case 2 D1B (25%) Heat and Mass Balance, GEE Gasifier and ASU

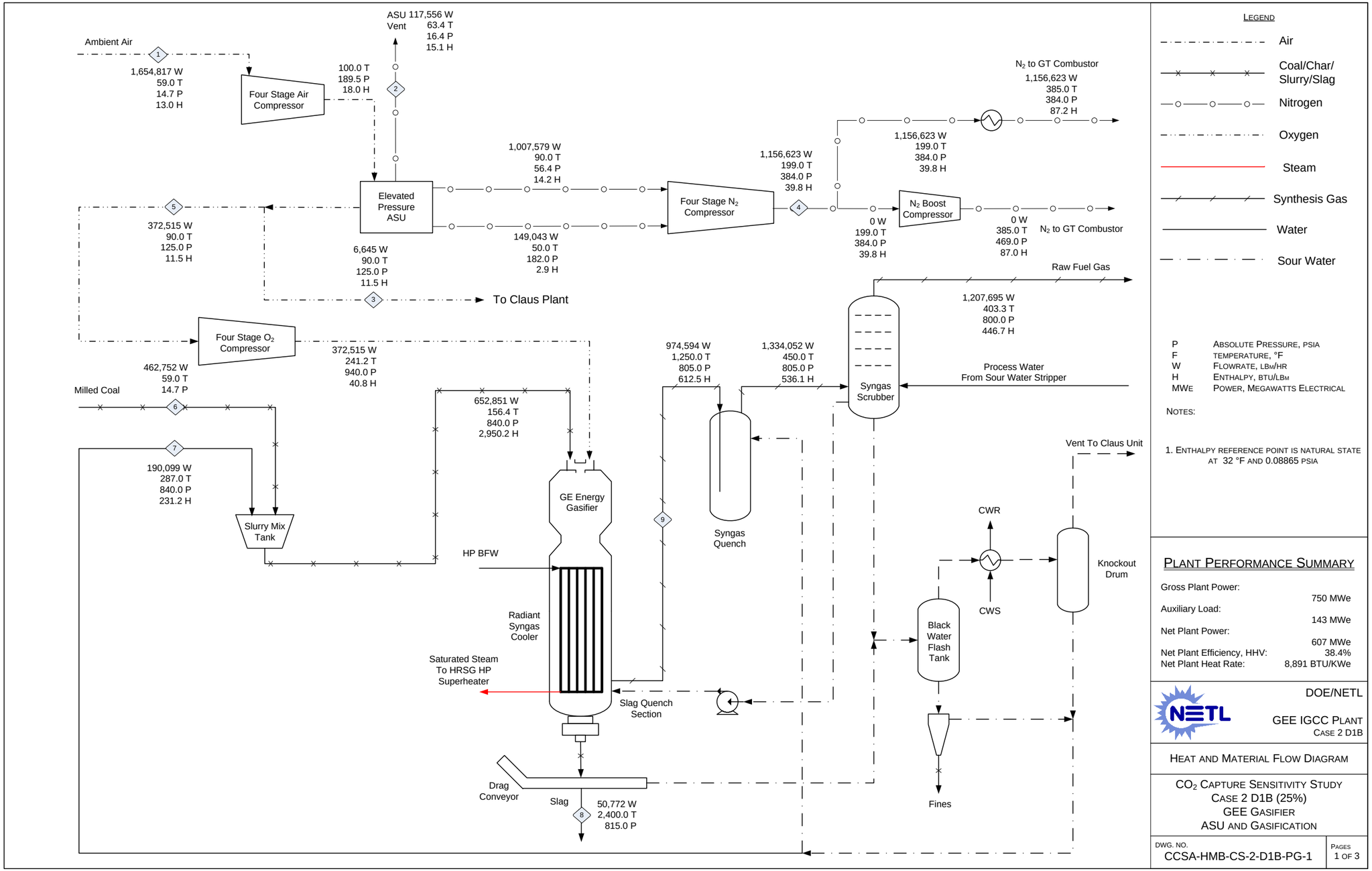

Exhibit 4-29 Case 2 D1B (25%) Heat and Mass Balance, Syngas Cleanup

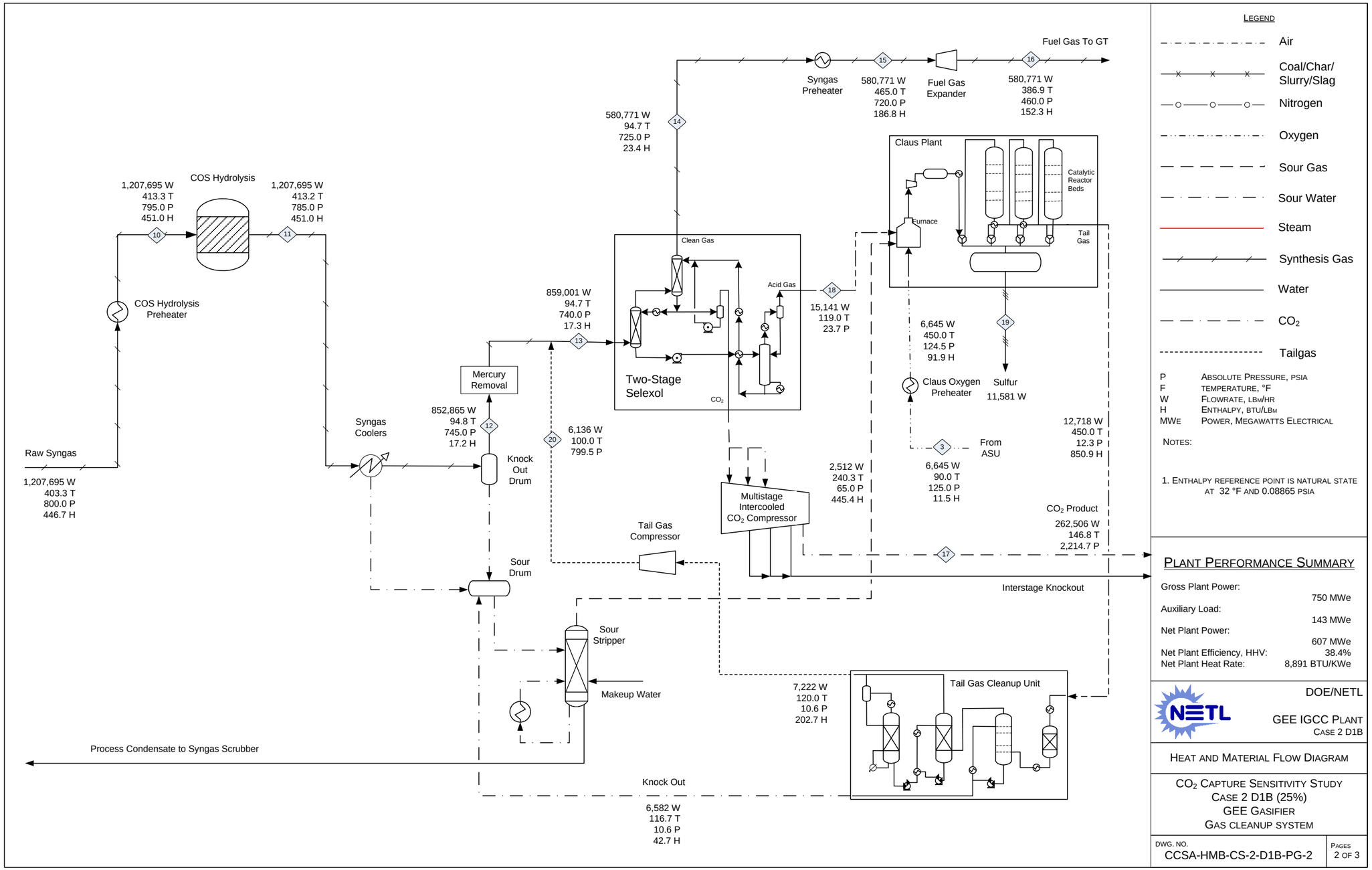

Exhibit 4-30 Case 2 D1B (25%) Heat and Mass Balance, Power Block

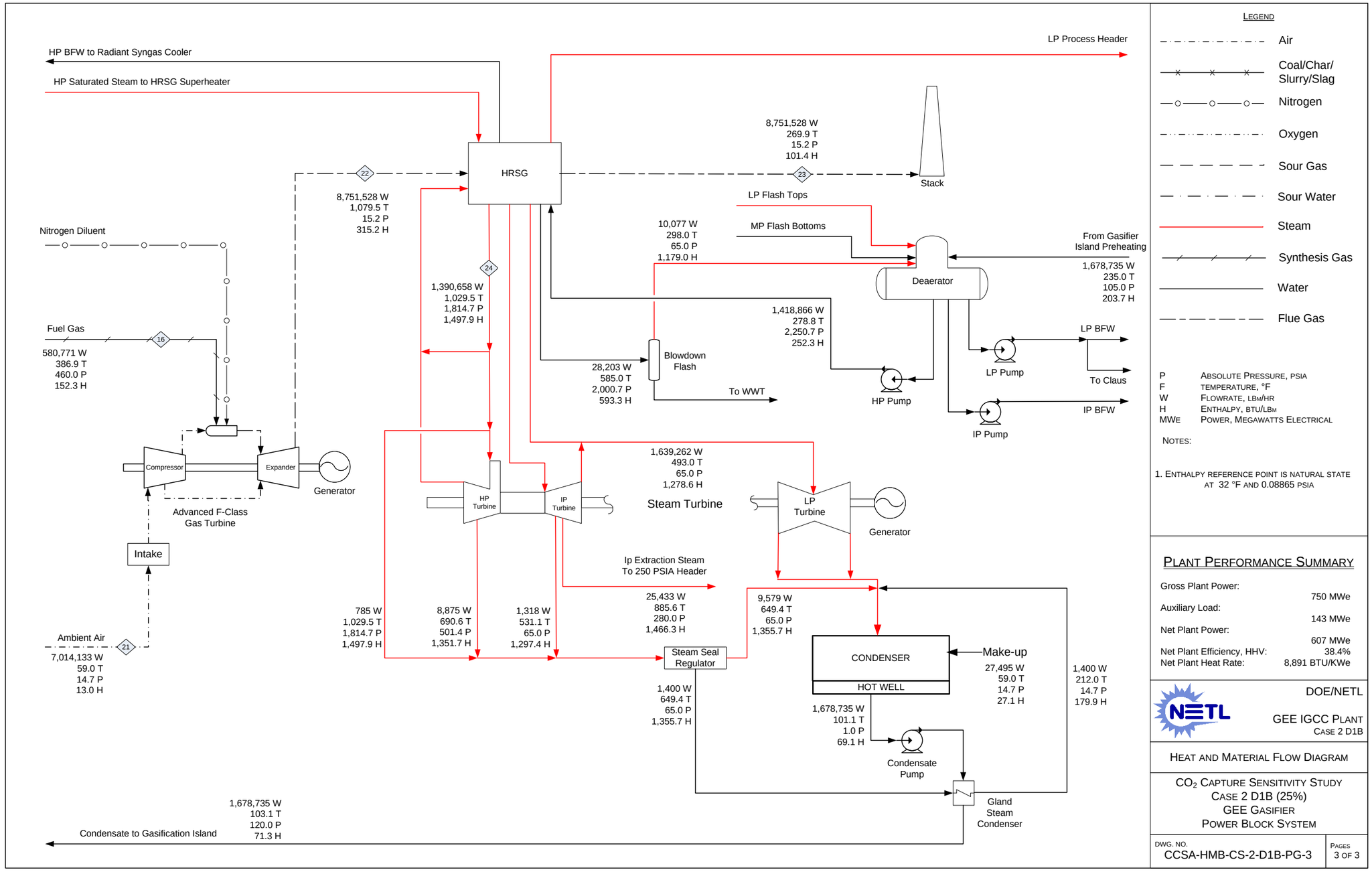

Exhibit 4-31 Case 2 D1A (0%) Energy Balance

	HHV	Sensible + Latent	Power	Total
Heat In GJ/hr (MMBtu/hr)				
Coal	5,746 (5,446)	4.8 (4.6)	0 (0)	5,751 (5,451)
ASU Air	0 (0)	19.1 (18.1)	0 (0)	19 (18)
GT Air	0 (0)	96.2 (91.2)	0 (0)	96 (91)
Water	0 (0)	67.4 (63.9)	0 (0)	67 (64)
Totals	**5,746 (5,446)**	**187.4 (177.7)**	**0 (0)**	**5,934 (5,624)**
Heat Out GJ/hr (MMBtu/hr)				
ASU Vent	0 (0)	1.0 (1.0)	0 (0)	1 (1)
Slag	89 (84)	36.3 (34.4)	0 (0)	125 (118)
Sulfur	49 (47)	0.6 (0.6)	0 (0)	50 (47)
Gasifier Heat Loss	0 (0)	41.2 (39.0)	0 (0)	41 (39)
Combustion Turbine Heat Loss	0 (0)	63 (60)	0 (0)	63 (60)
HRSG Flue Gas	0 (0)	939 (890)	0 (0)	939 (890)
Cooling Tower*	0 (0)	1,986 (1,882)	0 (0)	1,986 (1,882)
Process Losses**	0 (0)	489 (464)	0 (0)	489 (464)
Net Power	0 (0)	0.0 (0.0)	2,239 (2,123)	2,239 (2,123)
Totals	**138 (130)**	**3,557 (3,371)**	**2,239 (2,123)**	**5,934 (5,624)**

Note: Italicized numbers are estimated

Reference conditions are 0 °C (32.02 °F) & 0.6 kPa (0.089 psia)

* Includes Condenser, Cooling Tower Blowdown, and the following Non-Condenser Cooling Tower Loads: ASU compressor intercoolers, CO_2 compressor intercoolers, sour water stripper condenser, syngas cooler (low level heat rejection), and extraction air cooler.

** Calculated by difference to close the energy balance.

Exhibit 4-32 Case 2 D1B (25%) Energy Balance

	HHV	Sensible + Latent	Power	Total
Heat In GJ/hr (MMBtu/hr)				
Coal	5,696 (5,398)	4.8 (4.5)	0 (0)	5,700 (5,403)
ASU Air	0 (0)	22.7 (21.5)	0 (0)	23 (22)
GT Air	0 (0)	96.2 (91.2)	0 (0)	96 (91)
Water	0 (0)	66.8 (63.3)	0 (0)	67 (63)
Totals	**5,696 (5,398)**	**190.4 (180.5)**	**0 (0)**	**5,886 (5,579)**
Heat Out GJ/hr (MMBtu/hr)				
ASU Vent	0 (0)	1.9 (1.8)	0 (0)	2 (2)
Slag	88 (83)	36.0 (34.1)	0 (0)	124 (117)
Sulfur	49 (46)	0.6 (0.6)	0 (0)	49 (47)
CO_2	0 (0)	-12.8 (-12.2)	0 (0)	-13 (-12)
Gasifier Heat Loss	0 (0)	42.4 (40.2)	0 (0)	42 (40)
Combustion Turbine Heat Loss	0 (0)	63 (60)	0 (0)	63 (60)
HRSG Flue Gas	0 (0)	936 (887)	0 (0)	936 (887)
Cooling Tower*	0 (0)	2,072 (1,964)	0 (0)	2,072 (1,964)
Process Losses**	0 (0)	424 (402)	0 (0)	424 (402)
Net Power	0 (0)	0.0 (0.0)	2,186 (2,072)	2,186 (2,072)
Totals	**136 (129)**	**3,564 (3,378)**	**2,186 (2,072)**	**5,886 (5,579)**

Note: Italicized numbers are estimated
Reference conditions are 0 °C (32.02 °F) & 0.6 kPa (0.089 psia)
* Includes Condenser, Cooling Tower Blowdown, and the following Non-Condenser Cooling Tower Loads: ASU compressor intercoolers, CO_2 compressor intercoolers, sour water stripper condenser, syngas cooler (low level heat rejection), and extraction air cooler.
** Calculated by difference to close the energy balance.

Exhibit 4-33 Case 2 D1A Energy Balance Sankey Diagram

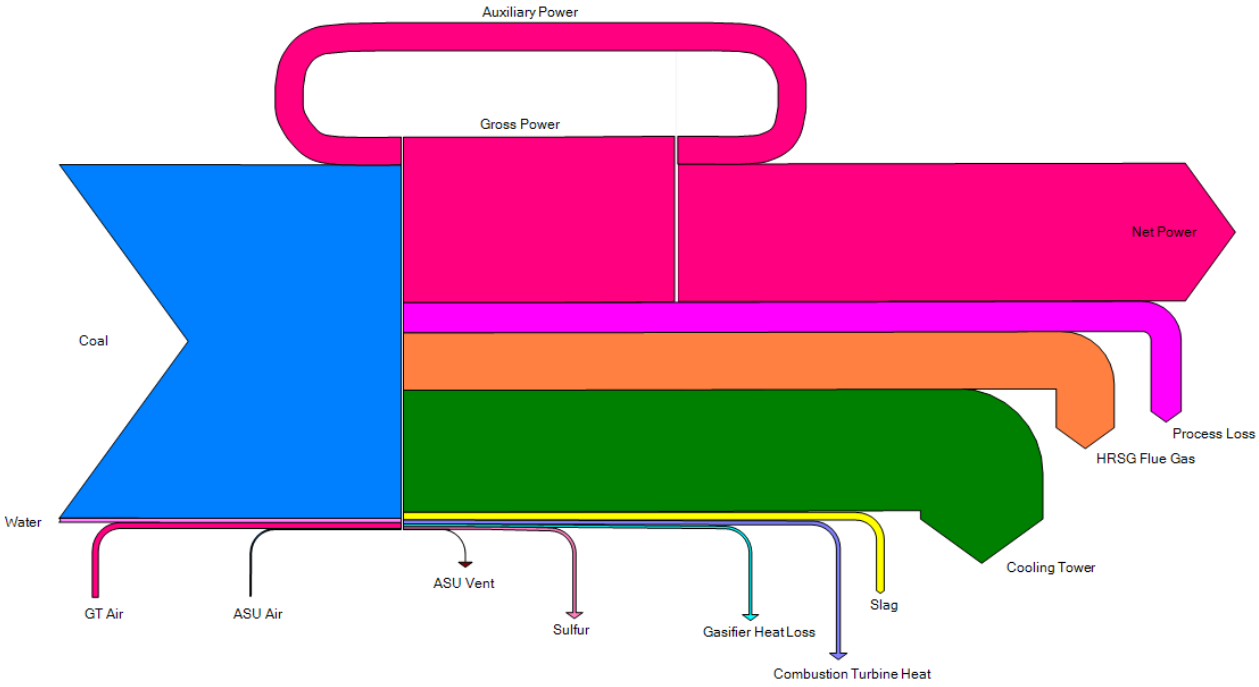

Exhibit 4-34 Case 2 D1B Energy Balance Sankey Diagram

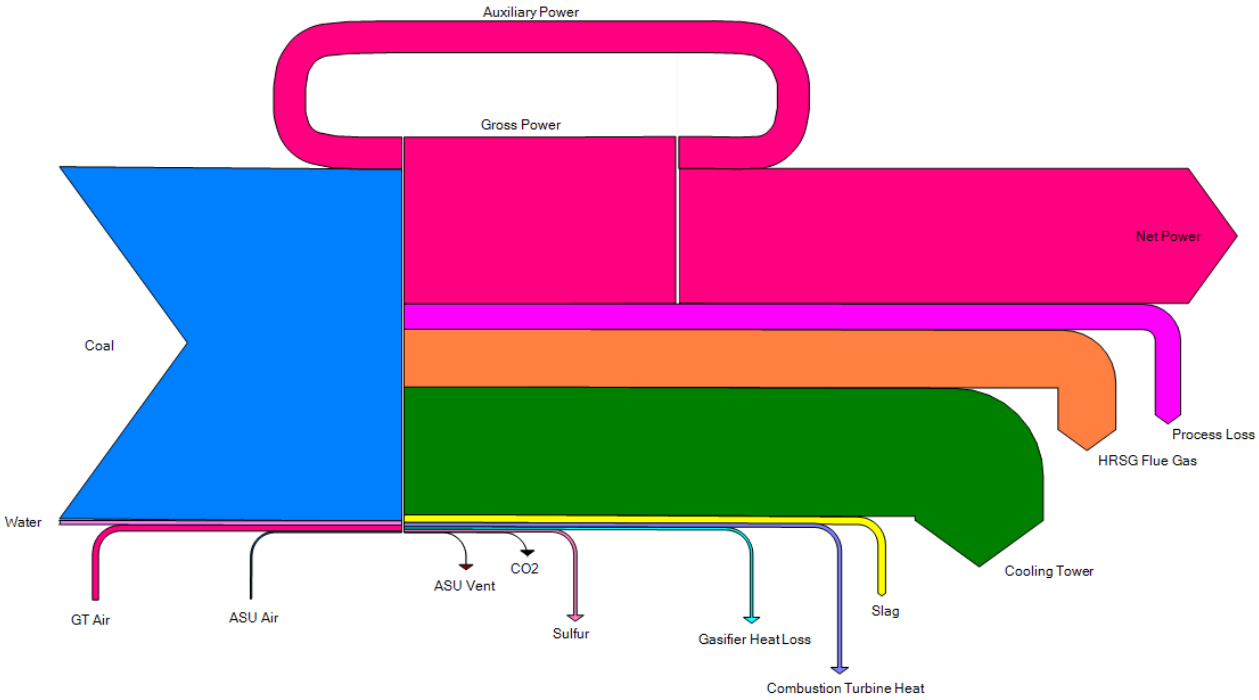

4.3.1.2 Major Equipment List for Case 2 D1

Major equipment items for Case 2 D1A and D1B are shown in the following tables. The accounts used in the equipment list correspond to the account numbers used in the cost estimates. In general, the design conditions include a 10 percent contingency for flows and heat duties and a 21 percent contingency for heads on pumps and fans.

ACCOUNT 1 COAL HANDLING

Equipment No.	Description	Type	Design Conditions		Opr Qty. (Spares)
			D1A	D1B	
1	Bottom Trestle Dumper and Receiving Hoppers	N/A	181 tonne (200 ton)	181 tonne (200 ton)	2 (0)
2	Feeder	Belt	572 tonne/hr (630 tph)	572 tonne/hr (630 tph)	2 (0)
3	Conveyor No. 1	Belt	1,134 tonne/hr (1,250 tph)	1,134 tonne/hr (1,250 tph)	1 (0)
4	Transfer Tower No. 1	Enclosed	N/A	N/A	1 (0)
5	Conveyor No. 2	Belt	1,134 tonne/hr (1,250 tph)	1,134 tonne/hr (1,250 tph)	1 (0)
6	As-Received Coal Sampling System	Two-stage	N/A	N/A	1 (0)
7	Stacker/Reclaimer	Traveling, linear	1,134 tonne/hr (1,250 tph)	1,134 tonne/hr (1,250 tph)	1 (0)
8	Reclaim Hopper	N/A	45 tonne (50 ton)	45 tonne (50 ton)	2 (1)
9	Feeder	Vibratory	172 tonne/hr (190 tph)	172 tonne/hr (190 tph)	2 (1)
10	Conveyor No. 3	Belt w/ tripper	354 tonne/hr (390 tph)	345 tonne/hr (380 tph)	1 (0)
11	Crusher Tower	N/A	N/A	N/A	1 (0)
12	Coal Surge Bin w/ Vent Filter	Dual outlet	172 tonne (190 ton)	172 tonne (190 ton)	2 (0)
13	Crusher	Impactor reduction	8 cm x 0 - 3 cm x 0 (3" x 0 - 1-1/4" x 0)	8 cm x 0 - 3 cm x 0 (3" x 0 - 1-1/4" x 0)	2 (0)
14	As-Fired Coal Sampling System	Swing hammer	N/A	N/A	1 (1)
15	Conveyor No. 4	Belt w/tripper	354 tonne/hr (390 tph)	345 tonne/hr (380 tph)	1 (0)
16	Transfer Tower No. 2	Enclosed	N/A	N/A	1 (0)
17	Conveyor No. 5	Belt w/ tripper	354 tonne/hr (390 tph)	345 tonne/hr (380 tph)	1 (0)
18	Coal Silo w/ Vent Filter and Slide Gates	Field erected	816 tonne (900 ton)	726 tonne (800 ton)	3 (0)

ACCOUNT 2 COAL PREPARATION AND FEED

Equipment No.	Description	Type	Design Condition		Opr Qty. (Spares)
			D1A	D1B	
1	Feeder	Vibratory	82 tonne/h (90 tph)	73 tonne/h (80 tph)	3 (0)
2	Conveyor No. 6	Belt w/tripper	236 tonne/h (260 tph)	227 tonne/h (250 tph)	1 (0)
3	Rod Mill Feed Hopper	Dual Outlet	463 tonne (510 ton)	463 tonne (510 ton)	1 (0)
4	Weigh Feeder	Belt	118 tonne/h (130 tph)	118 tonne/h (130 tph)	2 (0)
5	Rod Mill	Rotary	118 tonne/h (130 tph)	118 tonne/h (130 tph)	2 (0)
6	Slurry Water Storage Tank with Agitator	Field erected	287,504 liters (75,950 gal)	284,968 liters (75,280 gal)	2 (0)
7	Slurry Water Pumps	Centrifugal	795 lpm (210 gpm)	795 lpm (210 gpm)	2 (1)
8	Trommel Screen	Coarse	163 tonne/h (180 tph)	163 tonne/h (180 tph)	2 (0)
9	Rod Mill Discharge Tank with Agitator	Field erected	376,084 liters (99,350 gal)	372,790 liters (98,480 gal)	2 (0)
10	Rod Mill Product Pumps	Centrifugal	3,028 lpm (800 gpm)	3,028 lpm (800 gpm)	2 (2)
11	Slurry Storage Tank with Agitator	Field erected	1,128,440 liters (298,100 gal)	1,118,220 liters (295,400 gal)	2 (0)
12	Slurry Recycle Pumps	Centrifugal	6,435 lpm (1,700 gpm)	6,057 lpm (1,600 gpm)	2 (2)
13	Slurry Product Pumps	Positive displacement	3,028 lpm (800 gpm)	3,028 lpm (800 gpm)	2 (2)

ACCOUNT 3 FEEDWATER AND MISCELLANEOUS SYSTEMS AND EQUIPMENT

Equipment No.	Description	Type	Design Condition		Opr Qty. (Spares)
			D1A	D1B	
1	Demineralized Water Storage Tank	Vertical, cylindrical, outdoor	1,082,628 liters (286,000 gal)	1,086,413 liters (287,000 gal)	2 (0)
2	Condensate Pumps	Vertical canned	6,624 lpm @ 91 m H_2O (1,750 gpm @ 300 ft H_2O)	7,041 lpm @ 91 m H_2O (1,860 gpm @ 300 ft H_2O)	2 (1)
3	Deaerator (integral w/ HRSG)	Horizontal spray type	493,508 kg/hr (1,088,000 lb/hr)	483,983 kg/hr (1,067,000 lb/hr)	2 (0)
4	Intermediate Pressure Feedwater Pump	Horizontal centrifugal, single stage	8,366 lpm @ 27 m H_2O (2,210 gpm @ 90 ft H_2O)	8,101 lpm @ 27 m H_2O (2,140 gpm @ 90 ft H_2O)	2 (1)

Equipment No.	Description	Type	Design Condition		Opr Qty. (Spares)
			D1A	D1B	
5	High Pressure Feedwater Pump No. 1	Barrel type, multi-stage, centrifugal	HP water: 6,246 lpm @ 1,859 m H_2O (1,650 gpm @ 6,100 ft H_2O)	HP water: 6,132 lpm @ 1,859 m H_2O (1,620 gpm @ 6,100 ft H_2O)	2 (1)
6	High Pressure Feedwater Pump No. 2	Barrel type, multi-stage, centrifugal	IP water: 1,060 lpm @ 223 m H_2O (280 gpm @ 730 ft H_2O)	IP water: 1,476 lpm @ 223 m H_2O (390 gpm @ 730 ft H_2O)	2 (1)
7	Auxiliary Boiler	Shop fabricated, water tube	18,144 kg/hr, 2.8 MPa, 343°C (40,000 lb/hr, 400 psig, 650°F)	18,144 kg/hr, 2.8 MPa, 343°C (40,000 lb/hr, 400 psig, 650°F)	1 (0)
8	Service Air Compressors	Flooded Screw	28 m^3/min @ 0.7 MPa (1,000 scfm @ 100 psig)	28 m^3/min @ 0.7 MPa (1,000 scfm @ 100 psig)	2 (1)
9	Instrument Air Dryers	Duplex, regenerative	28 m^3/min (1,000 scfm)	28 m^3/min (1,000 scfm)	2 (1)
10	Closed Cylce Cooling Heat Exchangers	Plate and frame	247 GJ/hr (233.7595997 MMBtu/hr) each	247 GJ/hr (234.1323798 MMBtu/hr) each	2 (0)
11	Closed Cycle Cooling Water Pumps	Horizontal centrifugal	88,579 lpm @ 21 m H_2O (23,400 gpm @ 70 ft H_2O)	88,579 lpm @ 21 m H_2O (23,400 gpm @ 70 ft H_2O)	2 (1)
12	Engine-Driven Fire Pump	Vertical turbine, diesel engine	3,785 lpm @ 107 m H_2O (1,000 gpm @ 350 ft H_2O)	3,785 lpm @ 107 m H_2O (1,000 gpm @ 350 ft H_2O)	1 (1)
13	Fire Service Booster Pump	Two-stage horizontal centrifugal	2,650 lpm @ 76 m H_2O (700 gpm @ 250 ft H_2O)	2,650 lpm @ 76 m H_2O (700 gpm @ 250 ft H_2O)	1 (1)
14	Raw Water Pumps	Stainless steel, single suction	4,618 lpm @ 18 m H_2O (1,220 gpm @ 60 ft H_2O)	4,580 lpm @ 18 m H_2O (1,210 gpm @ 60 ft H_2O)	2 (1)
15	Ground Water Pumps	Stainless steel, single suction	3,066 lpm @ 268 m H_2O (810 gpm @ 880 ft H_2O)	3,028 lpm @ 268 m H_2O (800 gpm @ 880 ft H_2O)	3 (1)
16	Filtered Water Pumps	Stainless steel, single suction	2,082 lpm @ 49 m H_2O (550 gpm @ 160 ft H_2O)	2,082 lpm @ 49 m H_2O (550 gpm @ 160 ft H_2O)	2 (1)
17	Filtered Water Tank	Vertical, cylindrical	1,003,134 liter (265,000 gal)	995,563 liter (263,000 gal)	2 (0)
18	Makeup Water Demineralizer	Anion, cation, and mixed bed	303 lpm (80 gpm)	303 lpm (80 gpm)	2 (0)
19	Liquid Waste Treatment System		10 years, 24-hour storm	10 years, 24-hour storm	1 (0)

ACCOUNT 4 GASIFIER, ASU AND ACCESSORIES INCLUDING LOW TEMPERATURE HEAT RECOVERY

Equipment No.	Description	Type	Design Condition		Opr Qty. (Spares)
			D1A	D1B	
1	Gasifier	Pressurized slurry-feed, entrained bed	2,812 tonne/day, 5.6 MPa (3,100 tpd, 815 psia)	2,812 tonne/day, 5.6 MPa (3,100 tpd, 814.96 psia)	2 (0)
2	Synthesis Gas Cooler	Vertical downflow radiant heat exchanger with outlet quench chamber	245,393 kg/hr (541,000 lb/hr)	243,126 kg/hr (536,000 lb/hr)	2 (0)
3	Synthesis Gas Cyclone	High efficiency	335,658 kg/hr (740,000 lb/hr) Design efficiency 90%	332,937 kg/hr (734,000 lb/hr) Design efficiency 90%	2 (0)
4	Candle Filter	Pressurized filter with pulse-jet cleaning	metallic filters	metallic filters	2 (0)
5	Syngas Scrubber Including Sour Water Stripper	Vertical upflow	335,658 kg/hr (740,000 lb/hr)	332,937 kg/hr (734,000 lb/hr)	2 (0)
6	Raw Gas Coolers	Shell and tube with condensate drain	215,910 kg/hr (476,000 lb/hr)	287,578 kg/hr (634,000 lb/hr)	8 (0)
7	Raw Gas Knockout Drum	Vertical with mist eliminator	215,456 kg/hr, 35°C, 5.3 MPa (475,000 lb/hr, 95°F, 765 psia)	213,188 kg/hr, 35°C, 5.2 MPa (470,000 lb/hr, 95°F, 750 psia)	2 (0)
8	Flare Stack	Self-supporting, carbon steel, stainless steel top, pilot ignition	335,658 kg/hr (740,000 lb/hr) syngas	332,937 kg/hr (734,000 lb/hr) syngas	2 (0)
9	ASU Main Air Compressor	Centrifugal, multi-stage	4,757 m^3/min @ 1.3 MPa (168,000 scfm @ 190 psia)	5,635 m^3/min @ 1.3 MPa (199,000 scfm @ 190 psia)	2 (0)
10	Cold Box	Vendor design	2,268 tonne/day (2,500 tpd) of 95% purity oxygen	2,268 tonne/day (2,500 tpd) of 95% purity oxygen	2 (0)
11	Oxygen Compressor	Centrifugal, multi-stage	1,161 m^3/min (41,000 scfm) Suction - 0.9 MPa (130 psia) Discharge - 6.5 MPa (940 psia)	1,133 m^3/min (40,000 scfm) Suction - 0.9 MPa (130 psia) Discharge - 6.5 MPa (940 psia)	2 (0)
12	Primary Nitrogen Compressor	Centrifugal, multi-stage	3,766 m^3/min (133,000 scfm) Suction - 0.4 MPa (60 psia) Discharge - 2.7 MPa (390 psia)	3,540 m^3/min (125,000 scfm) Suction - 0.4 MPa (60 psia) Discharge - 2.7 MPa (390 psia)	2 (0)

Equipment No.	Description	Type	Design Condition		Opr Qty. (Spares)
			D1A	D1B	
13	Secondary Nitrogen Compressor	Centrifugal, single-stage	538 m^3/min (19,000 scfm) Suction - 1.2 MPa (180 psia) Discharge - 2.7 MPa (390 psia)	538 m^3/min (19,000 scfm) Suction - 1.2 MPa (180 psia) Discharge - 2.7 MPa (390 psia)	2 (0)
14	Syngas Dilution Nitrogen Boost Compressor	Centrifugal, single-stage	0 m^3/min (0 scfm) Suction - 2.6 MPa (380 psia) Discharge - 3.2 MPa (470 psia)	0 m^3/min (0 scfm) Suction - 2.6 MPa (380 psia) Discharge - 3.2 MPa (470 psia)	2 (0)
15	AGR Nitrogen Boost Compressor	Centrifugal, single-stage	85 m^3/min (3,000 scfm) Suction - 2.6 MPa (380 psia) Discharge - 5.4 MPa (790 psia)	N/A	2 (0)
16	Extraction Air Heat Exchanger	Gas-to-gas, vendor design	69,853 kg/hr, 432°C, 1.6 MPa (154,000 lb/hr, 810°F, 235 psia)	N/A	2 (0)

ACCOUNT 5A SYNGAS CLEANUP

Equipment No.	Description	Type	Design Condition		Opr Qty. (Spares)
			D1A	D1B	
1	Mercury Adsorber	Sulfated carbon bed	215,003 kg/hr (474,000 lb/hr) 35°C (95°F) 5.2 MPa (760 psia)	212,735 kg/hr (469,000 lb/hr) 35°C (95°F) 5.1 MPa (745 psia)	2 (0)
2	Sulfur Plant	Claus type	140 tonne/day (154 tpd)	139 tonne/day (153 tpd)	1 (0)
3	COS Hydrolysis Reactor	Fixed bed, catalytic	303,907 kg/hr (670,000 lb/hr) 221°C (430°F) 5.4 MPa (790 psia)	301,185 kg/hr (664,000 lb/hr) 204°C (400°F) 5.5 MPa (800 psia)	2 (0)
4	Acid Gas Removal Plant	Selexol	232,239 kg/hr (512,000 lb/hr) 35°C (94°F) 5.2 MPa (755 psia)	214,096 kg/hr (472,000 lb/hr) 35°C (95°F) 5.1 MPa (740 psia)	2 (0)
5	Hydrogenation Reactor	Fixed bed, catalytic	36,155 kg/hr (79,709 lb/hr) 232°C (450°F) 0.4 MPa (58.9 psia)	6,346 kg/hr (13,990 lb/hr) 232°C (450°F) 0.1 MPa (12.3 psia)	1 (0)
6	Tail Gas Recycle Compressor	Centrifugal	31993 kg/hr (70533.3901 lb/hr)	3,062 kg/hr (6,750 lb/hr)	1 (0)

ACCOUNT 5B CO_2 COMPRESSION

Equipment No.	Description	Type	Design Condition		Opr Qty. (Spares)
			D1A	D1B	
1	CO_2 Compressor	Integrally geared, multi-stage centrifugal	N/A	300 m^3/min @ 15.3 MPa (10,600 scfm @ 2,215 psia)	4 (0)

ACCOUNT 6 COMBUSTION TURBINE AND AUXILIARIES

Equipment No.	Description	Type	Design Condition		Opr Qty. (Spares)
			D1A	D1B	
1	Gas Turbine	Advanced F class	230 MW	230 MW	2 (0)
2	Gas Turbine Generator	TEWAC	260 MVA @ 0.9 p.f., 24 kV, 60 Hz, 3-phase	260 MVA @ 0.9 p.f., 24 kV, 60 Hz, 3-phase	2 (0)
3	Syngas Expansion Turbine/Generator	Turbo Expander	218,359 kg/h (481,400 lb/h) 5.1 MPa (745 psia) Inlet 3.2 MPa (460 psia) Outlet	144,877 kg/h (319,400 lb/h) 5.0 MPa (720 psia) Inlet 3.2 MPa (460 psia) Outlet	2 (0)

ACCOUNT 7 HRSG, DUCTING, AND STACK

Equipment No.	Description	Type	Design Condition		Opr Qty. (Spares)
			D1A	D1B	
1	Stack	CS plate, type 409SS liner	76 m (250 ft) high x 8.4 m (27 ft) diameter	76 m (250 ft) high x 8.4 m (28 ft) diameter	1 (0)
2	Heat Recovery Steam Generator	Drum, multi-pressure with economizer section and integral deaerator	Main steam - 352,655 kg/hr, 12.4 MPa/561°C (777,471 lb/hr, 1,800 psig/1,042°F) Reheat steam - 345,662 kg/hr, 3.1 MPa/561°C (762,055 lb/hr, 452 psig/1,042°F)	Main steam - 346,935 kg/hr, 12.4 MPa/554°C (764,862 lb/hr, 1,800 psig/1,030°F) Reheat steam - 346,574 kg/hr, 3.1 MPa/554°C (764,065 lb/hr, 452 psig/1,030°F)	2 (0)

ACCOUNT 8 STEAM TURBINE GENERATOR AND AUXILIARIES

Equipment No.	Description	Type	Design Condition		Opr Qty. (Spares)
			D1A	D1B	
1	Steam Turbine	Commercially available advanced steam turbine	291 MW 12.4 MPa/561°C/561°C (1,800 psig/ 1042°F/1042°F)	295 MW 12.4 MPa/554°C/554°C (1,800 psig/ 1030°F/1030°F)	1 (0)
2	Steam Turbine Generator	Hydrogen cooled, static excitation	320 MVA @ 0.9 p.f., 24 kV, 60 Hz, 3-phase	330 MVA @ 0.9 p.f., 24 kV, 60 Hz, 3-phase	1 (0)
3	Steam Bypass	One per HRSG	50% steam flow @ design steam conditions	50% steam flow @ design steam conditions	2 (0)
4	Surface Condenser	Single pass, divided waterbox including vacuum pumps	1,688 GJ/hr (1,600 MMBtu/hr), Inlet water temperature 16°C (60°F), Water temperature rise 11°C (20°F)	1,783 GJ/hr (1,690 MMBtu/hr), Inlet water temperature 16°C (60°F), Water temperature rise 11°C (20°F)	1 (0)

ACCOUNT 9 COOLING WATER SYSTEM

Equipment No.	Description	Type	Design Condition		Opr Qty. (Spares)
			D1A	D1B	
1	Circulating Water Pumps	Vertical, wet pit	420,181 lpm @ 30 m (111,000 gpm @ 100 ft)	416,395 lpm @ 30 m (110,000 gpm @ 100 ft)	2 (1)
2	Cooling Tower	Evaporative, mechanical draft, multi-cell	11°C (51.5°F) wet bulb / 16°C (60°F) CWT / 27°C (80°F) HWT / 2,353 GJ/hr (2,230 MMBtu/hr) heat duty	11°C (51.5°F) wet bulb / 16°C (60°F) CWT / 27°C (80°F) HWT / 2,332 GJ/hr (2,210 MMBtu/hr) heat duty	1 (0)

ACCOUNT 10 SLAG RECOVERY AND HANDLING

Equipment No.	Description	Type	Design Condition		Opr Qty. (Spares)
			D1A	D1B	
1	Slag Quench Tank	Water bath	242,266 liters (64,000 gal)	242,266 liters (64,000 gal)	2 (0)
2	Slag Crusher	Roll	13 tonne/hr (14 tph)	13 tonne/hr (14 tph)	2 (0)
3	Slag Depressurizer	Lock Hopper	13 tonne/hr (14 tph)	13 tonne/hr (14 tph)	2 (0)
4	Slag Receiving Tank	Horizontal, weir	147,631 liters (39,000 gal)	143,846 liters (38,000 gal)	2 (0)

Equipment No.	Description	Type	Design Condition		Opr Qty. (Spares)
			D1A	D1B	
5	Black Water Overflow Tank	Shop fabricated	64,352 liters (17,000 gal)	64,352 liters (17,000 gal)	2 (0)
6	Slag Conveyor	Drag chain	13 tonne/hr (14 tph)	13 tonne/hr (14 tph)	2 (0)
7	Slag Separation Screen	Vibrating	13 tonne/hr (14 tph)	13 tonne/hr (14 tph)	2 (0)
8	Coarse Slag Conveyor	Belt/bucket	13 tonne/hr (14 tph)	13 tonne/hr (14 tph)	2 (0)
9	Fine Ash Settling Tank	Vertical, gravity	208,198 liters (55,000 gal)	208,198 liters (55,000 gal)	2 (0)
10	Fine Ash Recycle Pumps	Horizontal centrifugal	38 lpm @ 14 m H_2O (10 gpm @ 46 ft H_2O)	38 lpm @ 14 m H_2O (10 gpm @ 46 ft H_2O)	2 (2)
11	Grey Water Storage Tank	Field erected	68,137 liters (18,000 gal)	64,352 liters (17,000 gal)	2 (0)
12	Grey Water Pumps	Centrifugal	227 lpm @ 564 m H_2O (60 gpm @ 1,850 ft H_2O)	227 lpm @ 564 m H_2O (60 gpm @ 1,850 ft H_2O)	2 (2)
13	Slag Storage Bin	Vertical, field erected	907 tonne (1,000 tons)	907 tonne (1,000 tons)	2 (0)
14	Unloading Equipment	Telescoping chute	109 tonne/hr (120 tph)	109 tonne/hr (120 tph)	1 (0)

ACCOUNT 11 ACCESSORY ELECTRIC PLANT

Equipment No.	Description	Type	Design Condition		Opr Qty. (Spares)
			D1A	D1B	
1	CTG Step-up Transformer	Oil-filled	24 kV/345 kV, 260 MVA, 3-ph, 60 Hz	24 kV/345 kV, 260 MVA, 3-ph, 60 Hz	2 (0)
2	STG Step-up Transformer	Oil-filled	24 kV/345 kV, 320 MVA, 3-ph, 60 Hz	24 kV/345 kV, 330 MVA, 3-ph, 60 Hz	1 (0)
3	High Voltage Auxiliary Transformer	Oil-filled	345 kV/13.8 kV, 54 MVA, 3-ph, 60 Hz	345 kV/13.8 kV, 63 MVA, 3-ph, 60 Hz	2 (0)
4	Medium Voltage Auxiliary Transformer	Oil-filled	24 kV/4.16 kV, 29 MVA, 3-ph, 60 Hz	24 kV/4.16 kV, 30 MVA, 3-ph, 60 Hz	1 (1)
5	Low Voltage Transformer	Dry ventilated	4.16 kV/480 V, 4 MVA, 3-ph, 60 Hz	4.16 kV/480 V, 4 MVA, 3-ph, 60 Hz	1 (1)
6	CTG Isolated Phase Bus Duct and Tap Bus	Aluminum, self-cooled	24 kV, 3-ph, 60 Hz	24 kV, 3-ph, 60 Hz	2 (0)

Equipment No.	Description	Type	Design Condition		Opr Qty. (Spares)
			D1A	D1B	
7	STG Isolated Phase Bus Duct and Tap Bus	Aluminum, self-cooled	24 kV, 3-ph, 60 Hz	24 kV, 3-ph, 60 Hz	1 (0)
8	Medium Voltage Switchgear	Metal clad	4.16 kV, 3-ph, 60 Hz	4.16 kV, 3-ph, 60 Hz	1 (1)
9	Low Voltage Switchgear	Metal enclosed	480 V, 3-ph, 60 Hz	480 V, 3-ph, 60 Hz	1 (1)
10	Emergency Diesel Generator	Sized for emergency shutdown	750 kW, 480 V, 3-ph, 60 Hz	750 kW, 480 V, 3-ph, 60 Hz	1 (0)

ACCOUNT 12 INSTRUMENTATION AND CONTROL

Equipment No.	Description	Type	Design Condition		Opr Qty. (Spares)
			D1A	D1B	
1	DCS - Main Control	Monitor/keyboard; Operator printer (laser color); Engineering printer (laser B&W)	Operator stations/printers and engineering stations/printers	Operator stations/printers and engineering stations/printers	1 (0)
2	DCS - Processor	Microprocessor with redundant input/output	N/A	N/A	1 (0)
3	DCS - Data Highway	Fiber optic	Fully redundant, 25% spare	Fully redundant, 25% spare	1 (0)

4.3.2 IGCC Design 2 – Single Water Gas Shift Reactor

A process block flow diagram for Case 2 Design 2 (D2) is shown in Exhibit 4-35. D2 represents an IGCC plant with a single WGS reactor and bypass stream (stream 13). This IGCC design uses a S:DG molar ratio of 0.25 at the outlet of the WGS reactor. The WGS bypass ratio and the two-stage Selexol™ CO_2 removal efficiency are adjusted to control the total CO_2 capture level. The Selexol™ removal efficiency is altered by varying the solvent circulation rate, which changes the size and cost of the Selexol™ system.

The WGS bypass ratio impacts the degree of CO to CO_2 and COS to H_2S conversion across the WGS reactor. Consequently, a downstream COS hydolysis unit is included in this design to ensure that sulfur emissions are below the limit of 0.0128 lb SO_2/MMBtu.

Four levels of total CO_2 removal were modeled for Case 2 D2: 25 percent (D2A), 45 percent (D2B), 60 percent (D2C), and 75 percent (D2D). The corresponding stream tables are contained in Exhibit 4-36, Exhibit 4-37, Exhibit 4-38, and Exhibit 4-39, respectively.

Overall performance for Case 2 D2 is summarized in Exhibit 4-40 which includes auxiliary power requirements.

Material and energy balance information, environmental performance and a major equipment list are summarized in Sections 4.3.2.1 and 4.3.2.2.

Exhibit 4-35 Case 2 D2 Process Block Flow Diagram, IGCC with Single WGS Reactor and Bypass

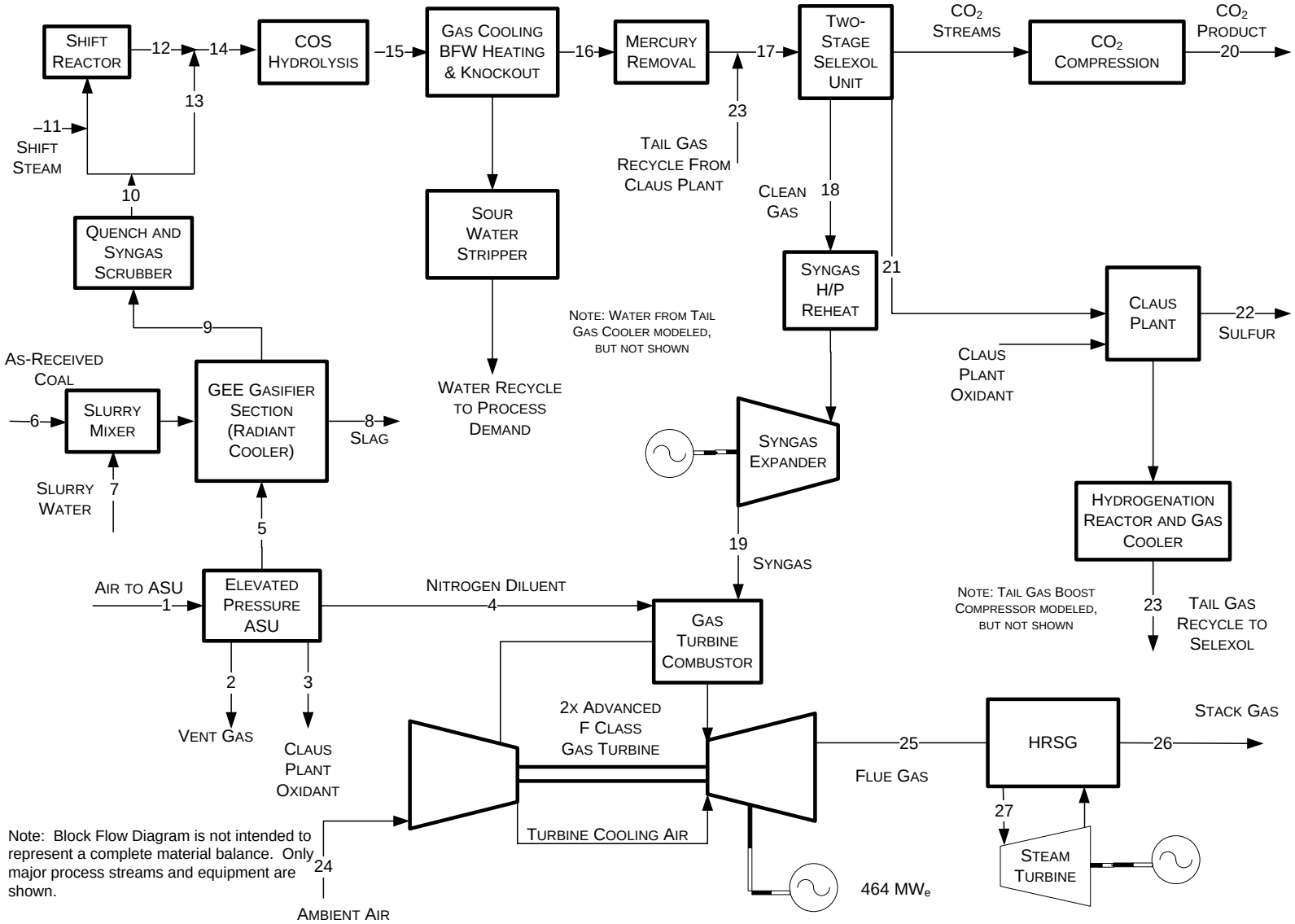

Note: Block Flow Diagram is not intended to represent a complete material balance. Only major process streams and equipment are shown.

Exhibit 4-36 Case 2 D2A Stream Table, 25% CO_2 Removal with Single WGS Bypass

	1	2	3	4	5	6	7	8	9	10	11	12	13	14
V-L Mole Fraction														
Ar	0.0092	0.0140	0.0318	0.0023	0.0318	0.0000	0.0000	0.0000	0.0086	0.0068	0.0000	0.0050	0.0068	0.0068
CH_4	0.0000	0.0000	0.0000	0.0000	0.0000	0.0000	0.0000	0.0000	0.0011	0.0009	0.0000	0.0007	0.0009	0.0009
CO	0.0000	0.0000	0.0000	0.0000	0.0000	0.0000	0.0000	0.0000	0.3576	0.2820	0.0000	0.0283	0.2820	0.2803
CO_2	0.0003	0.0044	0.0000	0.0000	0.0000	0.0000	0.0000	0.0000	0.1380	0.1088	0.0000	0.2588	0.1088	0.1098
COS	0.0000	0.0000	0.0000	0.0000	0.0000	0.0000	0.0000	0.0000	0.0002	0.0001	0.0000	0.0000	0.0001	0.0001
H_2	0.0000	0.0000	0.0000	0.0000	0.0000	0.0000	0.0000	0.0000	0.3406	0.2686	0.0000	0.3761	0.2686	0.2694
H_2O	0.0099	0.1105	0.0000	0.0003	0.0000	0.0000	0.9995	0.0000	0.1369	0.3197	1.0000	0.3214	0.3197	0.3197
HCl	0.0000	0.0000	0.0000	0.0000	0.0000	0.0000	0.0000	0.0000	0.0008	0.0002	0.0000	0.0001	0.0002	0.0002
H_2S	0.0000	0.0000	0.0000	0.0000	0.0000	0.0000	0.0000	0.0000	0.0073	0.0057	0.0000	0.0043	0.0057	0.0057
N_2	0.7732	0.7600	0.0178	0.9920	0.0178	0.0000	0.0000	0.0000	0.0070	0.0055	0.0000	0.0041	0.0055	0.0055
NH_3	0.0000	0.0000	0.0000	0.0000	0.0000	0.0000	0.0005	0.0000	0.0019	0.0016	0.0000	0.0012	0.0016	0.0016
O_2	0.2074	0.1111	0.9504	0.0054	0.9504	0.0000	0.0000	0.0000	0.0000	0.0000	0.0000	0.0000	0.0000	0.0000
SO_2	0.0000	0.0000	0.0000	0.0000	0.0000	0.0000	0.0000	0.0000	0.0000	0.0000	0.0000	0.0000	0.0000	0.0000
Total	1.0000	1.0000	1.0000	1.0000	1.0000	0.0000	1.0000	0.0000	1.0000	1.0000	1.0000	1.0000	1.0000	1.0000
V-L Flowrate (kg_{mol}/hr)	26,017	1,936	94	18,699	5,252	0	4,788	0	21,976	27,860	50	190	27,721	27,911
V-L Flowrate (kg/hr)	750,784	53,401	3,014	524,689	169,010	0	86,248	0	442,173	547,930	907	3,647	545,190	548,837
Solids Flowrate (kg/hr)	0	0	0	0	0	209,950	0	23,035	0	0	0	0	0	0
Temperature (°C)	15	17	32	93	32	15	142	1,316	677	206	288	408	212	212
Pressure (MPa, abs)	0.10	0.11	0.86	2.65	0.86	0.10	5.79	5.62	5.55	5.52	5.52	5.48	5.48	5.48
Enthalpy (kJ/kg)[A]	30.23	35.12	26.67	92.50	26.67	---	537.77	---	1,424.65	1,067.56	2,918.18	1,478.37	1,049.10	1,049.29
Density (kg/m^3)	1.2	1.4	11.0	24.4	11.0	---	872.0	---	14.0	27.2	25.6	18.6	27.4	27.4
V-L Molecular Weight	28.857	27.588	32.181	28.060	32.181	---	18.015	---	20.121	19.667	18.015	19.228	19.667	19.664
V-L Flowrate (lb_{mol}/hr)	57,359	4,267	206	41,224	11,578	0	10,555	0	48,448	61,422	111	418	61,115	61,533
V-L Flowrate (lb/hr)	1,655,196	117,730	6,644	1,156,741	372,603	0	190,143	0	974,824	1,207,979	2,000	8,040	1,201,939	1,209,979
Solids Flowrate (lb/hr)	0	0	0	0	0	462,861	0	50,784	0	0	0	0	0	0
Temperature (°F)	59	63	90	199	90	59	287	2,400	1,250	403	550	767	413	413
Pressure (psia)	14.7	16.4	125.0	384.0	125.0	14.7	840.0	815.0	805.0	800.0	800.0	795.0	795.0	795.0
Enthalpy (Btu/lb)[A]	13.0	15.1	11.5	39.8	11.5	---	231.2	---	612.5	459.0	1,254.6	635.6	451.0	451.1
Density (lb/ft^3)	0.076	0.089	0.687	1.521	0.687	---	54.440	---	0.871	1.699	1.597	1.162	1.710	1.710

A - Reference conditions are 32.02 F & 0.089 PSIA

Exhibit 4-36 Case 2 D2A Stream Table, 25% CO2 Removal with Single WGS Bypass (continued)

	15	16	17	18	19	20	21	22	23	24	25	26	27
V-L Mole Fraction													
Ar	0.0068	0.0100	0.0101	0.0118	0.0118	0.0006	0.0037	0.0000	0.0228	0.0092	0.0091	0.0091	0.0000
CH_4	0.0009	0.0013	0.0013	0.0015	0.0015	0.0002	0.0009	0.0000	0.0000	0.0000	0.0000	0.0000	0.0000
CO	0.2803	0.4126	0.4089	0.4791	0.4791	0.0253	0.1669	0.0000	0.0031	0.0000	0.0000	0.0000	0.0000
CO_2	0.1100	0.1619	0.1626	0.0263	0.0263	0.9653	0.0000	0.0000	0.2373	0.0003	0.0597	0.0597	0.0000
COS	0.0000	0.0000	0.0000	0.0000	0.0000	0.0000	0.0000	0.0000	0.0000	0.0000	0.0000	0.0000	0.0000
H_2	0.2694	0.3964	0.3984	0.4705	0.4705	0.0085	0.1036	0.0000	0.6154	0.0000	0.0000	0.0000	0.0000
H_2O	0.3196	0.0012	0.0012	0.0001	0.0001	0.0000	0.0311	0.0000	0.0013	0.0099	0.0635	0.0635	1.0000
HCl	0.0002	0.0000	0.0000	0.0000	0.0000	0.0000	0.0000	0.0000	0.0000	0.0000	0.0000	0.0000	0.0000
H_2S	0.0059	0.0086	0.0085	0.0000	0.0000	0.0001	0.6924	0.0000	0.0034	0.0000	0.0000	0.0000	0.0000
N_2	0.0055	0.0081	0.0091	0.0108	0.0108	0.0001	0.0016	0.0000	0.1166	0.7732	0.7566	0.7566	0.0000
NH_3	0.0016	0.0000	0.0000	0.0000	0.0000	0.0000	0.0000	0.0000	0.0000	0.0000	0.0000	0.0000	0.0000
O_2	0.0000	0.0000	0.0000	0.0000	0.0000	0.0000	0.0000	0.0000	0.0000	0.2074	0.1112	0.1112	0.0000
SO_2	0.0000	0.0000	0.0000	0.0000	0.0000	0.0000	0.0000	0.0000	0.0000	0.0000	0.0000	0.0000	0.0000
Total	1.0000	1.0000	1.0000	1.0000	1.0000	1.0000	1.0000	0.0000	1.0000	1.0000	1.0000	1.0000	1.0000
V-L Flowrate (kg_{mol}/hr)	27,911	18,962	19,135	16,101	16,101	2,784	235	0	172	110,253	137,409	137,409	35,016
V-L Flowrate (kg/hr)	548,837	387,556	390,331	262,829	262,829	120,373	6,864	0	2,775	3,181,557	3,969,076	3,969,076	630,824
Solids Flowrate (kg/hr)	0	0	0	0	0	0	0	5,254	0	0	0	0	0
Temperature (°C)	212	35	35	35	197	64	48	182	38	15	582	132	554
Pressure (MPa, abs)	5.41	5.14	5.10	5.00	3.17	15.270	0.163	0.119	5.512	0.101	0.105	0.105	12.512
Enthalpy (kJ/kg)[A]	1,049.19	40.00	40.14	54.66	355.29	-108.502	100.241	---	60.056	30.227	733.496	236.187	3,483.972
Density (kg/m^3)	27.0	41.2	40.9	31.5	13.1	483.1	1.8	5,270.3	34.4	1.2	0.4	0.9	35.5
V-L Molecular Weight	19.664	20.438	20	16.323	16.323	43.239	29.245	---	16.092	28.857	28.885	28.885	18.015
V-L Flowrate (lb_{mol}/hr)	61,533	41,805	42,185	35,498	35,498	6,137	517	0	380	243,066	302,934	302,934	77,197
V-L Flowrate (lb/hr)	1,209,979	854,415	860,533	579,439	579,439	265,378	15,133	0	6,118	7,014,133	8,750,314	8,750,314	1,390,729
Solids Flowrate (lb/hr)	0	0	0	0	0	0	0	11,583	0	0	0	0	0
Temperature (°F)	413	95	95	95	387	146	119	360	100	59	1,079	270	1,029
Pressure (psia)	785.0	745.0	740.0	725.0	460.0	2,214.7	23.7	17.3	799.5	14.7	15.2	15.2	1,814.7
Enthalpy (Btu/lb)[A]	451.1	17.2	17.3	23.5	152.7	-46.6	43.1	---	25.8	13.0	315.3	101.5	1,497.8
Density (lb/ft^3)	1.688	2.575	3	1.964	0.817	30.161	0.112	329.017	2.147	0.076	0.027	0.056	2.218

A - Reference conditions are 32.02 F & 0.089 PSIA

Exhibit 4-37 Case 2 D2B Stream Table, 45% CO_2 Capture with Single WGS Bypass

	1	2	3	4	5	6	7	8	9	10	11	12	13	14
V-L Mole Fraction														
Ar	0.0092	0.0143	0.0318	0.0023	0.0318	0.0000	0.0000	0.0000	0.0086	0.0068	0.0000	0.0061	0.0068	0.0065
CH_4	0.0000	0.0000	0.0000	0.0000	0.0000	0.0000	0.0000	0.0000	0.0011	0.0009	0.0000	0.0008	0.0009	0.0009
CO	0.0000	0.0000	0.0000	0.0000	0.0000	0.0000	0.0000	0.0000	0.3576	0.2821	0.0000	0.0615	0.2821	0.1879
CO_2	0.0003	0.0045	0.0000	0.0000	0.0000	0.0000	0.0000	0.0000	0.1380	0.1088	0.0000	0.2884	0.1088	0.1855
COS	0.0000	0.0000	0.0000	0.0000	0.0000	0.0000	0.0000	0.0000	0.0002	0.0001	0.0000	0.0000	0.0001	0.0001
H_2	0.0000	0.0000	0.0000	0.0000	0.0000	0.0000	0.0000	0.0000	0.3406	0.2687	0.0000	0.4314	0.2687	0.3381
H_2O	0.0099	0.1135	0.0000	0.0003	0.0000	0.0000	0.9995	0.0000	0.1369	0.3196	1.0000	0.2000	0.3196	0.2685
HCl	0.0000	0.0000	0.0000	0.0000	0.0000	0.0000	0.0000	0.0000	0.0008	0.0002	0.0000	0.0002	0.0002	0.0002
H_2S	0.0000	0.0000	0.0000	0.0000	0.0000	0.0000	0.0000	0.0000	0.0073	0.0057	0.0000	0.0052	0.0057	0.0055
N_2	0.7732	0.7537	0.0178	0.9920	0.0178	0.0000	0.0000	0.0000	0.0070	0.0055	0.0000	0.0049	0.0055	0.0053
NH_3	0.0000	0.0000	0.0000	0.0000	0.0000	0.0000	0.0005	0.0000	0.0019	0.0016	0.0000	0.0014	0.0016	0.0015
O_2	0.2074	0.1140	0.9504	0.0054	0.9504	0.0000	0.0000	0.0000	0.0000	0.0000	0.0000	0.0000	0.0000	0.0000
SO_2	0.0000	0.0000	0.0000	0.0000	0.0000	0.0000	0.0000	0.0000	0.0000	0.0000	0.0000	0.0000	0.0000	0.0000
Total	1.0000	1.0000	1.0000	1.0000	1.0000	0.0000	1.0000	0.0000	1.0000	1.0000	1.0000	1.0000	1.0000	1.0000
V-L Flowrate (kg_{mol}/hr)	26,429	1,914	96	19,047	5,334	0	4,863	0	22,320	28,292	1,328	12,644	16,975	29,620
V-L Flowrate (kg/hr)	762,647	52,772	3,082	534,452	171,659	0	87,600	0	449,104	556,426	23,916	246,487	333,856	580,342
Solids Flowrate (kg/hr)	0	0	0	0	0	213,242	0	23,396	0	0	0	0	0	0
Temperature (°C)	15	18	32	93	32	15	142	1,316	677	206	288	415	212	208
Pressure (MPa, abs)	0.10	0.11	0.86	2.65	0.86	0.10	5.79	5.62	5.55	5.52	5.52	5.48	5.48	5.48
Enthalpy (kJ/kg)[A]	30.23	35.18	26.67	92.50	26.67	---	537.77	---	1,424.65	1,067.22	2,918.18	1,192.31	1,048.78	939.48
Density (kg/m^3)	1.2	1.4	11.0	24.4	11.0	---	872.0	---	14.0	27.2	25.6	18.5	27.4	27.3
V-L Molecular Weight	28.857	27.575	32.181	28.060	32.181	---	18.015	---	20.121	19.667	18.015	19.494	19.667	19.593
V-L Flowrate (lb_{mol}/hr)	58,265	4,219	211	41,991	11,760	0	10,720	0	49,208	62,373	2,927	27,876	37,424	65,300
V-L Flowrate (lb/hr)	1,681,348	116,343	6,795	1,178,265	378,444	0	193,124	0	990,106	1,226,710	52,727	543,410	736,026	1,279,436
Solids Flowrate (lb/hr)	0	0	0	0	0	470,117	0	51,580	0	0	0	0	0	0
Temperature (°F)	59	64	90	199	90	59	287	2,400	1,250	403	550	780	413	407
Pressure (psia)	14.7	16.4	125.0	384.0	125.0	14.7	840.0	815.0	805.0	800.0	800.0	795.0	795.0	795.0
Enthalpy (Btu/lb)[A]	13.0	15.1	11.5	39.8	11.5	---	231.2	---	612.5	458.8	1,254.6	512.6	450.9	403.9
Density (lb/ft^3)	0.076	0.090	0.687	1.521	0.687	---	54.440	---	0.871	1.699	1.597	1.156	1.710	1.706

A - Reference conditions are 32.02 F & 0.089 PSIA

Exhibit 4-37 Case 2 D2B Stream Table, 45% CO2 Capture with Single WGS Bypass (continued)

	15	16	17	18	19	20	21	22	23	24	25	26	27
V-L Mole Fraction													
Ar	0.0065	0.0089	0.0090	0.0117	0.0117	0.0003	0.0037	0.0000	0.0254	0.0092	0.0091	0.0091	0.0000
CH_4	0.0009	0.0012	0.0012	0.0015	0.0015	0.0001	0.0009	0.0000	0.0000	0.0000	0.0000	0.0000	0.0000
CO	0.1879	0.2572	0.2553	0.3319	0.3319	0.0100	0.1184	0.0000	0.0022	0.0000	0.0000	0.0000	0.0000
CO_2	0.1856	0.2540	0.2535	0.0363	0.0363	0.9832	0.0000	0.0000	0.1881	0.0003	0.0445	0.0445	0.0000
COS	0.0000	0.0000	0.0000	0.0000	0.0000	0.0000	0.0000	0.0000	0.0000	0.0000	0.0000	0.0000	0.0000
H_2	0.3381	0.4627	0.4641	0.6079	0.6079	0.0062	0.1370	0.0000	0.6492	0.0000	0.0000	0.0000	0.0000
H_2O	0.2684	0.0012	0.0012	0.0001	0.0001	0.0000	0.0357	0.0000	0.0013	0.0099	0.0811	0.0811	1.0000
HCl	0.0002	0.0000	0.0000	0.0000	0.0000	0.0000	0.0000	0.0000	0.0000	0.0000	0.0000	0.0000	0.0000
H_2S	0.0056	0.0076	0.0076	0.0000	0.0000	0.0000	0.7027	0.0000	0.0037	0.0000	0.0000	0.0000	0.0000
N_2	0.0053	0.0072	0.0081	0.0106	0.0106	0.0001	0.0016	0.0000	0.1301	0.7732	0.7555	0.7555	0.0000
NH_3	0.0015	0.0000	0.0000	0.0000	0.0000	0.0000	0.0000	0.0000	0.0000	0.0000	0.0000	0.0000	0.0000
O_2	0.0000	0.0000	0.0000	0.0000	0.0000	0.0000	0.0000	0.0000	0.0000	0.2074	0.1097	0.1097	0.0000
SO_2	0.0000	0.0000	0.0000	0.0000	0.0000	0.0000	0.0000	0.0000	0.0000	0.0000	0.0000	0.0000	0.0000
Total	1.0000	1.0000	1.0000	1.0000	1.0000	1.0000	1.0000	0.0000	1.0000	1.0000	1.0000	1.0000	1.0000
V-L Flowrate (kg_{mol}/hr)	29,620	21,644	21,801	16,538	16,538	5,010	235	0	157	110,253	138,067	138,067	34,907
V-L Flowrate (kg/hr)	580,342	436,590	438,860	213,515	213,515	218,355	6,684	0	2,270	3,181,557	3,929,525	3,929,525	628,866
Solids Flowrate (kg/hr)	0	0	0	0	0	0	0	5,337	0	0	0	0	0
Temperature (°C)	208	35	35	35	197	55	48	182	38	15	576	132	548
Pressure (MPa, abs)	5.41	5.14	5.10	5.00	3.17	15.270	0.163	0.119	5.512	0.101	0.105	0.105	12.512
Enthalpy (kJ/kg)[A]	939.40	39.11	39.27	72.72	451.83	-145.215	110.774	---	69.903	30.227	762.853	267.463	3,469.021
Density (kg/m^3)	27.0	41.0	40.7	24.8	10.3	587.9	1.7	5,270.3	30.7	1.2	0.4	0.9	35.9
V-L Molecular Weight	19.593	20.172	20	12.911	12.911	43.582	28.392	---	14.458	28.857	28.461	28.461	18.015
V-L Flowrate (lb_{mol}/hr)	65,300	47,716	48,062	36,460	36,460	11,046	519	0	346	243,066	304,385	304,385	76,958
V-L Flowrate (lb/hr)	1,279,436	962,516	967,522	470,720	470,720	481,390	14,737	0	5,005	7,014,133	8,663,119	8,663,119	1,386,412
Solids Flowrate (lb/hr)	0	0	0	0	0	0	0	11,765	0	0	0	0	0
Temperature (°F)	407	95	95	95	387	130	119	360	100	59	1,069	270	1,019
Pressure (psia)	785.0	745.0	740.0	725.0	460.0	2,214.7	23.7	17.3	799.5	14.7	15.2	15.2	1,814.7
Enthalpy (Btu/lb)[A]	403.9	16.8	16.9	31.3	194.3	-62.4	47.6	---	30.1	13.0	328.0	115.0	1,491.4
Density (lb/ft^3)	1.684	2.562	3	1.547	0.646	36.702	0.109	329.013	1.916	0.076	0.026	0.055	2.239

A - Reference conditions are 32.02 F & 0.089 PSIA

Exhibit 4-38 Case 2 D2C Stream Table, 60% CO_2 Capture with Single WGS Bypass

	1	2	3	4	5	6	7	8	9	10	11	12	13	14
V-L Mole Fraction														
Ar	0.0092	0.0142	0.0318	0.0023	0.0318	0.0000	0.0000	0.0000	0.0086	0.0068	0.0000	0.0061	0.0068	0.0063
CH_4	0.0000	0.0000	0.0000	0.0000	0.0000	0.0000	0.0000	0.0000	0.0011	0.0009	0.0000	0.0008	0.0009	0.0008
CO	0.0000	0.0000	0.0000	0.0000	0.0000	0.0000	0.0000	0.0000	0.3576	0.2819	0.0000	0.0616	0.2819	0.1201
CO_2	0.0003	0.0045	0.0000	0.0000	0.0000	0.0000	0.0000	0.0000	0.1380	0.1088	0.0000	0.2884	0.1088	0.2408
COS	0.0000	0.0000	0.0000	0.0000	0.0000	0.0000	0.0000	0.0000	0.0002	0.0001	0.0000	0.0000	0.0001	0.0001
H_2	0.0000	0.0000	0.0000	0.0000	0.0000	0.0000	0.0000	0.0000	0.3406	0.2685	0.0000	0.4314	0.2685	0.3882
H_2O	0.0099	0.1129	0.0000	0.0003	0.0000	0.0000	0.9995	0.0000	0.1369	0.3199	1.0000	0.1999	0.3199	0.2317
HCl	0.0000	0.0000	0.0000	0.0000	0.0000	0.0000	0.0000	0.0000	0.0008	0.0002	0.0000	0.0002	0.0002	0.0002
H_2S	0.0000	0.0000	0.0000	0.0000	0.0000	0.0000	0.0000	0.0000	0.0073	0.0057	0.0000	0.0052	0.0057	0.0054
N_2	0.7732	0.7550	0.0178	0.9920	0.0178	0.0000	0.0000	0.0000	0.0070	0.0055	0.0000	0.0049	0.0055	0.0051
NH_3	0.0000	0.0000	0.0000	0.0000	0.0000	0.0000	0.0005	0.0000	0.0019	0.0016	0.0000	0.0014	0.0016	0.0015
O_2	0.2074	0.1134	0.9504	0.0054	0.9504	0.0000	0.0000	0.0000	0.0000	0.0000	0.0000	0.0000	0.0000	0.0000
SO_2	0.0000	0.0000	0.0000	0.0000	0.0000	0.0000	0.0000	0.0000	0.0000	0.0000	0.0000	0.0000	0.0000	0.0000
Total	1.0000	1.0000	1.0000	1.0000	1.0000	0.0000	1.0000	0.0000	1.0000	1.0000	1.0000	1.0000	1.0000	1.0000
V-L Flowrate (kg_{mol}/hr)	26,770	1,949	98	19,282	5,402	0	4,925	0	22,606	28,667	2,382	22,807	8,242	31,049
V-L Flowrate (kg/hr)	772,488	53,746	3,141	541,055	173,856	0	88,721	0	454,852	563,787	42,908	444,606	162,089	606,695
Solids Flowrate (kg/hr)	0	0	0	0	0	215,970	0	23,696	0	0	0	0	0	0
Temperature (°C)	15	18	32	93	32	15	142	1,316	677	206	288	416	212	206
Pressure (MPa, abs)	0.10	0.11	0.86	2.65	0.86	0.10	5.79	5.62	5.55	5.52	5.52	5.48	5.48	5.48
Enthalpy (kJ/kg)[A]	30.23	35.17	26.67	92.50	26.67	---	537.77	---	1,424.65	1,068.08	2,918.18	1,192.12	1,049.60	860.25
Density (kg/m^3)	1.2	1.4	11.0	24.4	11.0	---	872.0	---	14.0	27.2	25.6	18.5	27.4	27.3
V-L Molecular Weight	28.857	27.578	32.181	28.060	32.181	---	18.015	---	20.121	19.667	18.015	19.494	19.667	19.540
V-L Flowrate (lb_{mol}/hr)	59,017	4,297	215	42,510	11,910	0	10,858	0	49,837	63,201	5,251	50,281	18,170	68,452
V-L Flowrate (lb/hr)	1,703,045	118,490	6,924	1,192,823	383,287	0	195,596	0	1,002,776	1,242,938	94,595	980,189	357,345	1,337,533
Solids Flowrate (lb/hr)	0	0	0	0	0	476,133	0	52,240	0	0	0	0	0	0
Temperature (°F)	59	64	90	199	90	59	287	2,400	1,250	403	550	780	413	403
Pressure (psia)	14.7	16.4	125.0	384.0	125.0	14.7	840.0	815.0	805.0	800.0	800.0	795.0	795.0	795.0
Enthalpy (Btu/lb)[A]	13.0	15.1	11.5	39.8	11.5	---	231.2	---	612.5	459.2	1,254.6	512.5	451.2	369.8
Density (lb/ft^3)	0.076	0.090	0.687	1.521	0.687	---	54.440	---	0.871	1.699	1.597	1.156	1.710	1.703

A - Reference conditions are 32.02 F & 0.089 PSIA

Exhibit 4-38 Case 2 D2C Stream Table, 60% CO2 Capture with Single WGS Bypass (continued)

	15	16	17	18	19	20	21	22	23	24	25	26	27
V-L Mole Fraction													
Ar	0.0063	0.0081	0.0083	0.0116	0.0116	0.0002	0.0037	0.0000	0.0280	0.0092	0.0091	0.0091	0.0000
CH_4	0.0008	0.0011	0.0011	0.0015	0.0015	0.0001	0.0009	0.0000	0.0000	0.0000	0.0000	0.0000	0.0000
CO	0.1201	0.1564	0.1555	0.2171	0.2171	0.0049	0.0791	0.0000	0.0015	0.0000	0.0000	0.0000	0.0000
CO_2	0.2408	0.3137	0.3127	0.0462	0.0462	0.9891	0.0000	0.0000	0.1408	0.0003	0.0326	0.0326	0.0000
COS	0.0000	0.0000	0.0000	0.0000	0.0000	0.0000	0.0000	0.0000	0.0000	0.0000	0.0000	0.0000	0.0000
H_2	0.3882	0.5057	0.5068	0.7131	0.7131	0.0055	0.1642	0.0000	0.6815	0.0000	0.0000	0.0000	0.0000
H_2O	0.2317	0.0012	0.0012	0.0001	0.0001	0.0000	0.0395	0.0000	0.0013	0.0099	0.0954	0.0954	1.0000
HCl	0.0002	0.0000	0.0000	0.0000	0.0000	0.0000	0.0000	0.0000	0.0000	0.0000	0.0000	0.0000	0.0000
H_2S	0.0054	0.0070	0.0070	0.0000	0.0000	0.0000	0.7110	0.0000	0.0039	0.0000	0.0000	0.0000	0.0000
N_2	0.0051	0.0066	0.0075	0.0105	0.0105	0.0000	0.0016	0.0000	0.1431	0.7732	0.7543	0.7543	0.0000
NH_3	0.0015	0.0000	0.0000	0.0000	0.0000	0.0000	0.0000	0.0000	0.0000	0.0000	0.0000	0.0000	0.0000
O_2	0.0000	0.0000	0.0000	0.0000	0.0000	0.0000	0.0000	0.0000	0.0000	0.2074	0.1086	0.1086	0.0000
SO_2	0.0000	0.0000	0.0000	0.0000	0.0000	0.0000	0.0000	0.0000	0.0000	0.0000	0.0000	0.0000	0.0000
Total	1.0000	1.0000	1.0000	1.0000	1.0000	1.0000	1.0000	0.0000	1.0000	1.0000	1.0000	1.0000	1.0000
V-L Flowrate (kg_{mol}/hr)	31,049	23,833	23,978	16,933	16,933	6,790	236	0	145	110,253	138,593	138,593	34,560
V-L Flowrate (kg/hr)	606,695	476,637	478,503	174,962	174,962	296,664	6,538	0	1,866	3,181,557	3,897,575	3,897,575	622,616
Solids Flowrate (kg/hr)	0	0	0	0	0	0	0	5,405	0	0	0	0	0
Temperature (°C)	206	35	35	35	198	53	48	182	38	15	571	132	544
Pressure (MPa, abs)	5.41	5.14	5.10	5.00	3.17	15.270	0.163	0.119	5.512	0.101	0.105	0.105	12.512
Enthalpy (kJ/kg)[A]	860.19	38.39	38.56	93.69	567.40	-154.608	119.799	---	81.238	30.227	787.418	293.271	3,457.191
Density (kg/m^3)	26.9	40.9	40.5	19.8	8.3	617.1	1.7	5,270.2	27.2	1.2	0.4	0.9	36.1
V-L Molecular Weight	19.540	19.999	20	10.332	10.332	43.694	27.699	---	12.893	28.857	28.122	28.122	18.015
V-L Flowrate (lb_{mol}/hr)	68,452	52,543	52,862	37,332	37,332	14,968	520	0	319	243,066	305,545	305,545	76,193
V-L Flowrate (lb/hr)	1,337,533	1,050,805	1,054,918	385,725	385,725	654,032	14,413	0	4,113	7,014,133	8,592,683	8,592,683	1,372,633
Solids Flowrate (lb/hr)	0	0	0	0	0	0	0	11,916	0	0	0	0	0
Temperature (°F)	403	95	95	95	388	127	119	360	100	59	1,061	270	1,011
Pressure (psia)	785.0	745.0	740.0	725.0	460.0	2,214.7	23.7	17.3	799.5	14.7	15.2	15.2	1,814.7
Enthalpy (Btu/lb)[A]	369.8	16.5	16.6	40.3	243.9	-66.5	51.5	---	34.9	13.0	338.5	126.1	1,486.3
Density (lb/ft^3)	1.681	2.554	3	1.236	0.517	38.525	0.106	329.010	1.698	0.076	0.026	0.055	2.257

A - Reference conditions are 32.02 F & 0.089 PSIA

Exhibit 4-39 Case 2 D2D Stream Table, 75% CO_2 Capture with Single WGS Bypass

	1	2	3	4	5	6	7	8	9	10	11	12	13	14
V-L Mole Fraction														
Ar	0.0092	0.0152	0.0318	0.0023	0.0318	0.0000	0.0000	0.0000	0.0086	0.0068	0.0000	0.0061	0.0000	0.0061
CH_4	0.0000	0.0000	0.0000	0.0000	0.0000	0.0000	0.0000	0.0000	0.0011	0.0009	0.0000	0.0008	0.0000	0.0008
CO	0.0000	0.0000	0.0000	0.0000	0.0000	0.0000	0.0000	0.0000	0.3576	0.2819	0.0000	0.0616	0.0000	0.0616
CO_2	0.0003	0.0049	0.0000	0.0000	0.0000	0.0000	0.0000	0.0000	0.1380	0.1088	0.0000	0.2885	0.0000	0.2885
COS	0.0000	0.0000	0.0000	0.0000	0.0000	0.0000	0.0000	0.0000	0.0002	0.0001	0.0000	0.0000	0.0000	0.0000
H_2	0.0000	0.0000	0.0000	0.0000	0.0000	0.0000	0.0000	0.0000	0.3406	0.2685	0.0000	0.4315	0.0000	0.4315
H_2O	0.0099	0.1226	0.0000	0.0003	0.0000	0.0000	0.9995	0.0000	0.1369	0.3201	1.0000	0.1998	0.0000	0.1998
HCl	0.0000	0.0000	0.0000	0.0000	0.0000	0.0000	0.0000	0.0000	0.0008	0.0002	0.0000	0.0002	0.0000	0.0002
H_2S	0.0000	0.0000	0.0000	0.0000	0.0000	0.0000	0.0000	0.0000	0.0073	0.0057	0.0000	0.0052	0.0000	0.0052
N_2	0.7732	0.7347	0.0178	0.9920	0.0178	0.0000	0.0000	0.0000	0.0070	0.0055	0.0000	0.0049	0.0000	0.0049
NH_3	0.0000	0.0000	0.0000	0.0000	0.0000	0.0000	0.0005	0.0000	0.0019	0.0016	0.0000	0.0014	0.0000	0.0014
O_2	0.2074	0.1226	0.9504	0.0054	0.9504	0.0000	0.0000	0.0000	0.0000	0.0000	0.0000	0.0000	0.0000	0.0000
SO_2	0.0000	0.0000	0.0000	0.0000	0.0000	0.0000	0.0000	0.0000	0.0000	0.0000	0.0000	0.0000	0.0000	0.0000
Total	1.0000	1.0000	1.0000	1.0000	1.0000	0.0000	1.0000	0.0000	1.0000	1.0000	1.0000	1.0000	0.0000	1.0000
V-L Flowrate (kg_{mol}/hr)	27,043	1,813	94	19,635	5,462	0	4,979	0	22,854	28,991	3,368	32,358	0	32,358
V-L Flowrate (kg/hr)	780,370	49,911	3,040	550,960	175,763	0	89,694	0	459,840	570,131	60,671	630,802	0	630,802
Solids Flowrate (kg/hr)	0	0	0	0	0	218,339	0	23,956	0	0	0	0	0	0
Temperature (°C)	15	18	32	93	32	15	142	1,316	677	206	288	415	---	204
Pressure (MPa, abs)	0.10	0.11	0.86	2.65	0.86	0.10	5.79	5.62	5.55	5.52	5.52	5.48	---	5.48
Enthalpy (kJ/kg)[A]	30.23	35.36	26.67	92.50	26.67	---	537.77	---	1,424.65	1,068.64	2,918.18	1,191.97	---	791.08
Density (kg/m^3)	1.2	1.4	11.0	24.4	11.0	---	872.0	---	14.0	27.2	25.6	18.5	---	27.2
V-L Molecular Weight	28.857	27.535	32.181	28.060	32.181	---	18.015	---	20.121	19.666	18.015	19.494	---	19.494
V-L Flowrate (lb_{mol}/hr)	59,619	3,996	208	43,288	12,041	0	10,977	0	50,384	63,913	7,425	71,338	0	71,338
V-L Flowrate (lb/hr)	1,720,422	110,034	6,701	1,214,660	387,491	0	197,741	0	1,013,775	1,256,924	133,757	1,390,681	0	1,390,681
Solids Flowrate (lb/hr)	0	0	0	0	0	481,355	0	52,813	0	0	0	0	0	0
Temperature (°F)	59	64	90	199	90	59	287	2,400	1,250	403	550	780	---	400
Pressure (psia)	14.7	16.4	125.0	384.0	125.0	14.7	840.0	815.0	805.0	800.0	800.0	795.0	---	795.0
Enthalpy (Btu/lb)[A]	13.0	15.2	11.5	39.8	11.5	---	231.2	---	612.5	459.4	1,254.6	512.5	---	340.1
Density (lb/ft^3)	0.076	0.090	0.687	1.521	0.687	---	54.440	---	0.871	1.699	1.597	1.156	---	1.700

A - Reference conditions are 32.02 F & 0.089 PSIA

Exhibit 4-39 Case 2 D2D Stream Table, 75% CO2 Capture with Single WGS Bypass (continued)

	15	16	17	18	19	20	21	22	23	24	25	26	27
V-L Mole Fraction													
Ar	0.0061	0.0076	0.0077	0.0115	0.0115	0.0002	0.0028	0.0000	0.0178	0.0092	0.0091	0.0091	0.0000
CH_4	0.0008	0.0010	0.0010	0.0015	0.0015	0.0001	0.0007	0.0000	0.0000	0.0000	0.0000	0.0000	0.0000
CO	0.0616	0.0770	0.0764	0.1143	0.1143	0.0021	0.0315	0.0000	0.0044	0.0000	0.0000	0.0000	0.0000
CO_2	0.2885	0.3608	0.3612	0.0493	0.0493	0.9925	0.2533	0.0000	0.4110	0.0003	0.0207	0.0207	0.0000
COS	0.0000	0.0000	0.0000	0.0000	0.0000	0.0000	0.0000	0.0000	0.0000	0.0000	0.0000	0.0000	0.0000
H_2	0.4315	0.5396	0.5390	0.8128	0.8128	0.0051	0.1414	0.0000	0.4667	0.0000	0.0000	0.0000	0.0000
H_2O	0.1998	0.0012	0.0012	0.0001	0.0001	0.0000	0.0323	0.0000	0.0015	0.0099	0.1087	0.1087	1.0000
HCl	0.0002	0.0000	0.0000	0.0000	0.0000	0.0000	0.0000	0.0000	0.0000	0.0000	0.0000	0.0000	0.0000
H_2S	0.0053	0.0066	0.0065	0.0000	0.0000	0.0000	0.5369	0.0000	0.0047	0.0000	0.0000	0.0000	0.0000
N_2	0.0049	0.0062	0.0069	0.0105	0.0105	0.0000	0.0012	0.0000	0.0940	0.7732	0.7541	0.7541	0.0000
NH_3	0.0014	0.0000	0.0000	0.0000	0.0000	0.0000	0.0000	0.0000	0.0000	0.0000	0.0000	0.0000	0.0000
O_2	0.0000	0.0000	0.0000	0.0000	0.0000	0.0000	0.0000	0.0000	0.0000	0.2074	0.1075	0.1075	0.0000
SO_2	0.0000	0.0000	0.0000	0.0000	0.0000	0.0000	0.0000	0.0000	0.0000	0.0000	0.0000	0.0000	0.0000
Total	1.0000	1.0000	1.0000	1.0000	1.0000	1.0000	1.0000	0.0000	1.0000	1.0000	1.0000	1.0000	1.0000
V-L Flowrate (kg_{mol}/hr)	32,358	25,873	26,095	17,195	17,195	8,562	317	0	222	110,253	139,112	139,112	34,199
V-L Flowrate (kg/hr)	630,802	513,914	518,948	133,950	133,950	374,680	9,945	0	5,033	3,181,557	3,866,468	3,866,468	616,113
Solids Flowrate (kg/hr)	0	0	0	0	0	0	0	5,464	0	0	0	0	0
Temperature (°C)	204	35	35	35	198	52	48	181	38	15	567	132	539
Pressure (MPa, abs)	5.41	5.14	5.10	5.00	3.17	15.270	0.163	0.119	5.512	0.101	0.105	0.105	12.512
Enthalpy (kJ/kg)[A]	791.04	37.74	37.69	127.51	753.85	-159.330	97.137	---	32.253	30.227	810.659	318.046	3,445.333
Density (kg/m^3)	26.9	40.8	40.6	14.9	6.2	632.2	1.9	5,272.4	50.3	1.2	0.4	0.9	36.4
V-L Molecular Weight	19.494	19.863	20	7.790	7.790	43.760	31.351	---	22.680	28.857	27.794	27.794	18.015
V-L Flowrate (lb_{mol}/hr)	71,338	57,041	57,530	37,909	37,909	18,877	699	0	489	243,066	306,690	306,690	75,397
V-L Flowrate (lb/hr)	1,390,681	1,132,987	1,144,084	295,309	295,309	826,028	21,926	0	11,097	7,014,133	8,524,103	8,524,103	1,358,296
Solids Flowrate (lb/hr)	0	0	0	0	0	0	0	12,047	0	0	0	0	0
Temperature (°F)	400	95	95	95	388	125	119	359	100	59	1,052	270	1,002
Pressure (psia)	785.0	745.0	740.0	725.0	460.0	2,214.7	23.7	17.3	799.5	14.7	15.2	15.2	1,814.7
Enthalpy (Btu/lb)[A]	340.1	16.2	16.2	54.8	324.1	-68.5	41.8	---	13.9	13.0	348.5	136.7	1,481.2
Density (lb/ft^3)	1.679	2.548	3	0.930	0.390	39.466	0.120	329.147	3.139	0.076	0.026	0.054	2.274

A - Reference conditions are 32.02 F & 0.089 PSIA

Exhibit 4-40 Case 2 D2 Performance Modeling Results

POWER SUMMARY (Gross Power at Generator Terminals, kWe)	D2A (25%)	D2B (45%)	D2C (60%)	D2D (75%)
Gas Turbine Power	464,000	464,000	464,000	464,000
Sweet Gas Expander Power	5,800	6,000	6,100	6,200
Steam Turbine Power	280,600	276,900	275,100	271,800
Total	**750,400**	**746,900**	**745,200**	**742,000**
AUXILIARY LOAD SUMMARY, kWe				
Coal Handling	457	461	463	466
Coal Milling	2,159	2,193	2,221	2,246
Sour Water Recycle Slurry Pump	181	183	185	186
Slag Handling	1,106	1,123	1,138	1,150
Air Separation Unit Auxiliaries	1,000	1,000	1,000	1,000
Air Separation Unit Main Air Compressor	64,024	65,036	65,875	66,547
Oxygen Compressor	10,167	10,326	10,404	10,518
Nitrogen Compressors	31,389	32,027	33,061	34,281
CO_2 Compressor	8,497	15,047	20,335	25,605
Boiler Feedwater Pumps	3,970	4,001	4,035	4,062
Condensate Pump	250	256	260	262
Quench Water Pump	513	518	523	527
Circulating Water Pump	4,165	4,312	4,420	4,513
Ground Water Pumps	425	456	480	501
Cooling Tower Fans	2,153	2,231	2,287	2,331
Scrubber Pumps	212	216	218	220
Acid Gas Removal	4,861	8,912	12,149	15,519
Gas Turbine Auxiliaries	1,000	1,000	1,000	1,000
Steam Turbine Auxiliaries	100	100	100	100
Claus Plant/TGTU Auxiliaries	250	250	250	250
Claus Plant TG Recycle Compressor	828	756	699	1,052
Miscellaneous Balance of Plant [1]	3,000	3,000	3,000	3,000
Transformer Losses	2,667	2,693	2,719	2,741
TOTAL AUXILIARIES, kWe	**143,374**	**156,097**	**166,822**	**178,077**
NET POWER, kWe	**607,026**	**590,803**	**578,378**	**563,923**
Net Plant Efficiency, % (HHV)	38.4%	36.8%	35.5%	34.3%
Net Plant Heat Rate, kJ/kWh (Btu/kWh)	9,385 (8,895)	9,796 (9,285)	10,132 (9,604)	10,506 (9,958)
Condenser Duty, GJ/hr (10^6 Btu/hr)	1,625 (1,540)	1,614 (1,530)	1,593 (1,510)	1,561 (1,480)
CONSUMABLES				
As-Received Coal Feed, kg/hr (lb/hr)	209,950 (462,861)	213,242 (470,117)	215,970 (476,133)	218,339 (481,355)
Thermal Input, kW_{th} [2]	1,582,508	1,607,315	1,627,884	1,645,739
Raw Water Withdrawal, m^3/min (gpm)	17.8 (4,697)	19.1 (5,038)	20.1 (5,300)	20.9 (5,530)
Raw Water Consumption, m^3/min (gpm)	14.1 (3,727)	15.3 (4,033)	16.2 (4,270)	17.0 (4,481)

Notes: 1. Includes plant control systems, lighting, HVAC, and miscellaneous low voltage loads
2. HHV of As Received Illinois No. 6 coal is 27,135 kJ/kg (11,666 Btu/lb)

4.3.2.1 Environmental Performance for Case 2 D2

The environmental targets for emissions of Hg, NO_x, SO_2, and particulate matter were presented in Section 2.4. A summary of the plant air emissions for Case 2 D2A, D2B, D2C, and D2D is presented in Exhibit 4-41.

For Case 2 D2, SO_2 emissions are controlled by sulfur capture across the two-stage Selexol™ unit. The clean syngas exiting the AGR unit has a sulfur concentration of about 10 ppmv, resulting in a concentration in the flue gas of less than 2 ppmv. The H_2S-rich regeneration gas produced in Case 2 D2 is fed to a Claus plant, producing elemental sulfur. The Claus plant tail gas is hydrogenated to convert all sulfur species to H_2S and then recycled back to the Selexol™ unit, thereby eliminating the need for a tail gas treatment unit.

NO_x emissions are limited by nitrogen dilution of the syngas to 15 ppmvd (as NO_2 @ 15 percent O_2). Ammonia in the syngas is removed with process condensate prior to the low-temperature AGR process, and ultimately incinerated in the Claus plant burner. This also assists in lowering NOx levels.

Particulate discharge to the atmosphere is limited to extremely low values by the use of the syngas quench in addition to the syngas scrubber and the gas washing effect of the AGR absorber. The particulate emissions represent filterable particulate only.

Ninety-five percent of the mercury is captured from the syngas by an activated carbon bed.

For Case 2 D2, varying levels of the CO_2 [25 percent (D2A), 45 percent (D2B), 60 percent (D2C), and 75 percent (D2D)] in the syngas are captured in the two-stage Selexol™ unit and compressed for sequestration. The carbon balance for Case 2 D2 is shown in Exhibit 4-42. The carbon input to the plant consists of carbon in the air and coal. Carbon in the air is not neglected here since the Aspen model accounts for air components throughout. Carbon leaves the plant as unburned carbon in the slag, as dissolved CO_2 in the wastewater blowdown stream, and as CO_2 in the stack gas, ASU vent gas, and the captured CO_2 product. Carbon in the wastewater blowdown stream is calculated by difference to close the material balance. The carbon capture efficiency is defined as the pounds of carbon in the CO_2 product stream relative to the amount of carbon in the coal, less carbon contained in the slag, represented by the following fraction:

(Carbon in CO_2 Product)/[(Carbon in the Coal)-(Carbon in Slag)] or

73,037/(295,050-5,901)*100=25.3% (D2A)
131,784/(299,675-5,993)*100=44.9% (D2B)
178,734/(303,510-6,070)*100=60.1% (D2C)
225,516/(306,839-6,137)*100=75.0% (D2D)

Exhibit 4-43 shows the sulfur balance for Case 2 D2. Sulfur input comes solely from the sulfur in the coal. Sulfur output includes the pounds of sulfur recovered in the Claus plant, dissolved SO_2 in the wastewater blowdown stream, and sulfur emitted in the stack gas. Sulfur in the slag is considered to be negligible, and the sulfur content of the blowdown stream is calculated by difference to close the material balance. The total sulfur capture is represented by the following fraction:

(Sulfur byproduct/Sulfur in the coal) or
(11,583/11,601)*100 = 99.8% (D2A)
(11,765/11,783)*100 = 99.8% (D2B)
(11,916/11,934)*100 = 99.8% (D2C)
(12,047/12,065)*100 = 99.8% (D2D)

The overall water balances for Case 2 D2A, D2B, D2C, and D2D are shown in Exhibit 4-44, Exhibit 4-45, Exhibit 4-46, and Exhibit 4-47, respectively. Raw water is obtained from groundwater (50 percent) and from municipal sources (50 percent). Water demand represents the total amount of water required for a particular process. Some water is recovered within the process and that water is reused as internal recycle. Raw water withdrawal is the difference between water demand and internal recycle. Process water discharged from the power plant is also accounted for in this study. Raw water consumption represents raw water withdrawal less process water discharge.

Heat and Mass Balance Diagrams

Heat and mass balance diagrams are shown for the following subsystems in Exhibit 4-48 through Exhibit 4-59.

- Gasifier and ASU
- Syngas Cleanup
- Power Block

An overall plant energy balance for Case D2A, D2B, D2C, and D2D is provided in tabular form in Exhibit 4-60, Exhibit 4-61, Exhibit 4-62, and Exhibit 4-63, respectively. The power out is the combined combustion turbine, steam turbine and expander power after generator losses. In addition, energy balance Sankey diagrams are provided for D2A, D2B, D2C, and D2D in Exhibit 4-64, Exhibit 4-65, Exhibit 4-66, and Exhibit 4-67, respectively.

Exhibit 4-41 Case 2 D2 Estimated Air Emission Rates

	kg/GJ ($lb/10^6$ Btu)				Tonne/year (ton/year) 85% capacity factor				kg/MWh (lb/MWh)			
	D2A	D2B	D2C	D2D	D2A	D2B	D2C	D2D	D2A	D2B	D2C	D2D
SO_2	0.001 (0.002)	0.001 (0.002)	0.001 (0.002)	0.001 (0.002)	37 (40)	37 (41)	38 (42)	38 (42)	0.007 (0.02)	0.007 (0.02)	0.007 (0.02)	0.007 (0.02)
NO_X	0.024 (0.055)	0.023 (0.053)	0.022 (0.051)	0.022 (0.050)	947 (1,044)	926 (1,021)	909 (1,002)	894 (985)	0.180 (0.397)	0.177 (0.390)	0.174 (0.384)	0.172 (0.379)
PM	0.003 (0.0071)	0.003 (0.0071)	0.003 (0.0071)	0.003 (0.0071)	122 (134)	124 (136)	125 (138)	127 (140)	0.023 (0.051)	0.024 (0.052)	0.024 (0.053)	0.024 (0.054)
Hg	$0.246x10^{-6}$ ($0.571x10^{-6}$)	$0.246x10^{-6}$ ($0.571x10^{-6}$)	$0.246x10^{-6}$ ($0.571x10^{-6}$)	$0.246x10^{-6}$ ($0.571x10^{-6}$)	0.010 (0.011)	0.010 (0.011)	0.010 (0.011)	0.010 (0.011)	$1.87x10^{-6}$ ($4.11x10^{-6}$)	$1.90x10^{-6}$ ($4.20x10^{-6}$)	$1.93x10^{-6}$ ($4.26x10^{-6}$)	$1.96x10^{-6}$ ($4.32x10^{-6}$)
CO_2	63.3 (147.3)	46.8 (108.8)	33.9 (78.9)	21.4 (49.7)	2,528,260 (2,786,929)	1,896,795 (2,090,859)	1,393,730 (1,536,324)	886,830 (977,563)	481 (1,060)	362 (799)	267 (588)	171 (376)
CO_2 net									594 (1,310)	458 (1,010)	344 (758)	224 (495)

Exhibit 4-42 Case 2 D2 Carbon Balance

Carbon In, kg/hr (lb/hr)				
	D2A	**D2B**	**D2C**	**D2D**
Coal	133,832 (295,050)	135,930 (299,675)	137,670 (303,510)	139,180 (306,839)
Air (CO_2)	535 (1,179)	536 (1,183)	538 (1,185)	539 (1,188)
Total	**134,367 (296,229)**	**136,466 (300,858)**	**138,208 (304,695)**	**139,719 (308,027)**
Carbon Out, kg/hr (lb/hr)				
Slag	2,677 (5,901)	2,719 (5,993)	2,753 (6,070)	2,784 (6,137)
Stack Gas	98,459 (217,066)	73,868 (162,851)	54,277 (119,660)	34,536 (76,140)
ASU Vent	102 (225)	104 (229)	105 (232)	106 (234)
CO_2 Product	33,129 (73,037)	59,776 (131,784)	81,072 (178,734)	102,292 (225,516)
Convergence Tolerance	0 (0)	-1 (1)	1 (-1)	1 (0)
Total	**134,367 (296,229)**	**136,466 (300,858)**	**138,208 (304,695)**	**139,719 (308,027)**

Exhibit 4-43 Case 2 D2 Sulfur Balance

Sulfur In, kg/hr (lb/hr)				
	D2A	**D2B**	**D2C**	**D2D**
Coal	5,262 (11,601)	5,345 (11,783)	5,413 (11,934)	5,472 (12,065)
Total	**5,262 (11,601)**	**5,345 (11,783)**	**5,413 (11,934)**	**5,472 (12,065)**
Sulfur Out, kg/hr (lb/hr)				
Elemental Sulfur	5,254 (11,583)	5,337 (11,765)	5,405 (11,916)	5,464 (12,047)
Stack Gas	3 (6)	3 (6)	3 (6)	3 (6)
CO_2 Product	5 (12)	5 (12)	5 (12)	5 (12)
Convergence Tolerance*	0 (0)	0 (0)	0 (0)	0 (0)
Total	**5,262 (11,601)**	**5,345 (11,783)**	**5,413 (11,934)**	**5,472 (12,065)**

Exhibit 4-44 Case 2 D2A (25%) Water Balance

Water Use	Water Demand, m^3/min (gpm)	Internal Recycle, m^3/min (gpm)	Raw Water Withdrawal, m^3/min (gpm)	Process Water Discharge, m^3/min (gpm)	Raw Water Consumption, m^3/min (gpm)
Slag Handling	0.50 (132)	0.50 (132)	0.0 (0)	0.0 (0)	0.0 (0)
Quench/Wash	2.7 (719)	0.88 (233)	1.8 (486)	0.0 (0)	1.8 (486)
Humidifier	0.0 (0)	0.0 (0)	0.0 (0)	0.0 (0)	0.0 (0)
SWS Blowdown	0.0 (0)	0.0 (0)	0.0 (0)	0.03 (7)	-0.03 (-7)
Condenser Makeup	**0.2 (59)**	**0.0 (0)**	**0.2 (59)**	**0.0 (0)**	**0.2 (59)**
Gasifier Steam	0.0 (0)	0.0 (0)	0.0 (0)		
Shift Steam	0.0 (4)	0.0 (0)	0.0 (4)		
CT Steam Dilution	0.0 (0)	0.0 (0)	0.0 (0)		
BFW Makeup	0.21 (55)	0.0 (0)	0.21 (55)		
Cooling Tower	**16.2 (4,282)**	**0.49 (130)**	**15.7 (4,153)**	**3.6 (963)**	**12.1 (3,190)**
BFW Blowdown	0.0 (0)	0.21 (55)	-0.21 (-55)		
SWS Blowdown	0.0 (0)	0.28 (75)	-0.28 (-75)		
SWS Excess Water	0.0 (0)	0.0 (0)	0.0 (0)		
Humidifier Tower Blowdown	0.0 (0)	0.0 (0)	0.0 (0)		
Total	**21.1 (5,572)**	**3.31 (875)**	**17.8 (4,697)**	**3.7 (970)**	**14.1 (3,727)**
Total, gal/MWh_{net}	**551**	**86**	**464**	**96**	**368**

Exhibit 4-45 Case 2 D2B (45%) Water Balance

Water Use	Water Demand, m^3/min (gpm)	Internal Recycle, m^3/min (gpm)	Raw Water Withdrawal, m^3/min (gpm)	Process Water Discharge, m^3/min (gpm)	Raw Water Consumption, m^3/min (gpm)
Slag Handling	0.51 (134)	0.51 (134)	0.0 (0)	0.0 (0)	0.0 (0)
Quench/Wash	2.8 (730)	0.63 (167)	2.1 (564)	0.0 (0)	2.1 (564)
Humidifier	0.0 (0)	0.0 (0)	0.0 (0)	0.0 (0)	0.0 (0)
SWS Blowdown	0.0 (0)	0.0 (0)	0.0 (0)	0.03 (7)	-0.03 (-7)
Condenser Makeup	**0.6 (161)**	**0.0 (0)**	**0.6 (161)**	**0.0 (0)**	**0.6 (161)**
Gasifier Steam	0.0 (0)	0.0 (0)	0.0 (0)		
Shift Steam	0.4 (105)	0.0 (0)	0.4 (105)		
CT Steam Dilution	0.0 (0)	0.0 (0)	0.0 (0)		
BFW Makeup	0.21 (55)	0.0 (0)	0.21 (55)		
Cooling Tower	**16.8 (4,437)**	**0.47 (124)**	**16.3 (4,313)**	**3.8 (998)**	**12.5 (3,315)**
BFW Blowdown	0.0 (0)	0.21 (55)	-0.21 (-55)		
SWS Blowdown	0.0 (0)	0.26 (69)	-0.26 (-69)		
SWS Excess Water	0.0 (0)	0.0 (0)	0.0 (0)		
Humidifier Tower Blowdown	0.0 (0)	0.0 (0)	0.0 (0)		
Total	**22.1 (5,848)**	**3.07 (811)**	**19.1 (5,038)**	**3.8 (1,005)**	**15.3 (4,033)**
Total, gal/MWh_{net}	**594**	**82**	**512**	**102**	**410**

Exhibit 4-46 Case 2 D2C (60%) Water Balance

Water Use	Water Demand, m^3/min (gpm)	Internal Recycle, m^3/min (gpm)	Raw Water Withdrawal, m^3/min (gpm)	Process Water Discharge, m^3/min (gpm)	Raw Water Consumption, m^3/min (gpm)
Slag Handling	0.51 (136)	0.51 (136)	0.0 (0)	0.0 (0)	0.0 (0)
Quench/Wash	2.8 (740)	0.43 (113)	2.4 (626)	0.0 (0)	2.4 (626)
Humidifier	0.0 (0)	0.0 (0)	0.0 (0)	0.0 (0)	0.0 (0)
SWS Blowdown	0.0 (0)	0.0 (0)	0.0 (0)	0.02 (6)	-0.02 (-6)
Condenser Makeup	**0.9 (244)**	**0.0 (0)**	**0.9 (244)**	**0.0 (0)**	**0.9 (244)**
Gasifier Steam	0.0 (0)	0.0 (0)	0.0 (0)		
Shift Steam	0.7 (189)	0.0 (0)	0.7 (189)		
CT Steam Dilution	0.0 (0)	0.0 (0)	0.0 (0)		
BFW Makeup	0.21 (55)	0.0 (0)	0.21 (55)		
Cooling Tower	**17.2 (4,548)**	**0.45 (119)**	**16.8 (4,429)**	**3.9 (1,023)**	**12.9 (3,406)**
BFW Blowdown	0.0 (0)	0.21 (55)	-0.21 (-55)		
SWS Blowdown	0.0 (0)	0.24 (64)	-0.24 (-64)		
SWS Excess Water	0.0 (0)	0.0 (0)	0.0 (0)		
Humidifier Tower Blowdown	0.0 (0)	0.0 (0)	0.0 (0)		
Total	**22.9 (6,059)**	**2.87 (759)**	**20.1 (5,300)**	**3.9 (1,029)**	**16.2 (4,270)**
Total, gal/MWh_{net}	**629**	**79**	**550**	**107**	**443**

Exhibit 4-47 Case 2 D2D (75%) Water Balance

Water Use	Water Demand, m^3/min (gpm)	Internal Recycle, m^3/min (gpm)	Raw Water Withdrawal, m^3/min (gpm)	Process Water Discharge, m^3/min (gpm)	Raw Water Consumption, m^3/min (gpm)
Slag Handling	0.52 (137)	0.52 (137)	0.0 (0)	0.0 (0)	0.0 (0)
Quench/Wash	2.8 (748)	0.24 (62)	2.6 (686)	0.0 (0)	2.6 (686)
Humidifier	0.0 (0)	0.0 (0)	0.0 (0)	0.0 (0)	0.0 (0)
SWS Blowdown	0.0 (0)	0.0 (0)	0.0 (0)	0.02 (6)	-0.02 (-6)
Condenser Makeup	**1.2 (322)**	**0.0 (0)**	**1.2 (322)**	**0.0 (0)**	**1.2 (322)**
Gasifier Steam	0.0 (0)	0.0 (0)	0.0 (0)		
Shift Steam	1.0 (268)	0.0 (0)	1.0 (268)		
CT Steam Dilution	0.0 (0)	0.0 (0)	0.0 (0)		
BFW Makeup	0.21 (54)	0.0 (0)	0.21 (54)		
Cooling Tower	**17.6 (4,636)**	**0.43 (114)**	**17.1 (4,522)**	**3.9 (1,043)**	**13.2 (3,480)**
BFW Blowdown	0.0 (0)	0.21 (54)	-0.21 (-54)		
SWS Blowdown	0.0 (0)	0.23 (59)	-0.23 (-59)		
SWS Excess Water	0.0 (0)	0.0 (0)	0.0 (0)		
Humidifier Tower Blowdown	0.0 (0)	0.0 (0)	0.0 (0)		
Total	**23.6 (6,239)**	**2.68 (709)**	**20.9 (5,530)**	**4.0 (1,049)**	**17.0 (4,481)**
Total, gal/MWh_{net}	**664**	**75**	**588**	**112**	**477**

This page intentionally left blank

Exhibit 4-48 Case 2 D2A (25%) Heat and Mass Balance, GEE Gasifier and ASU

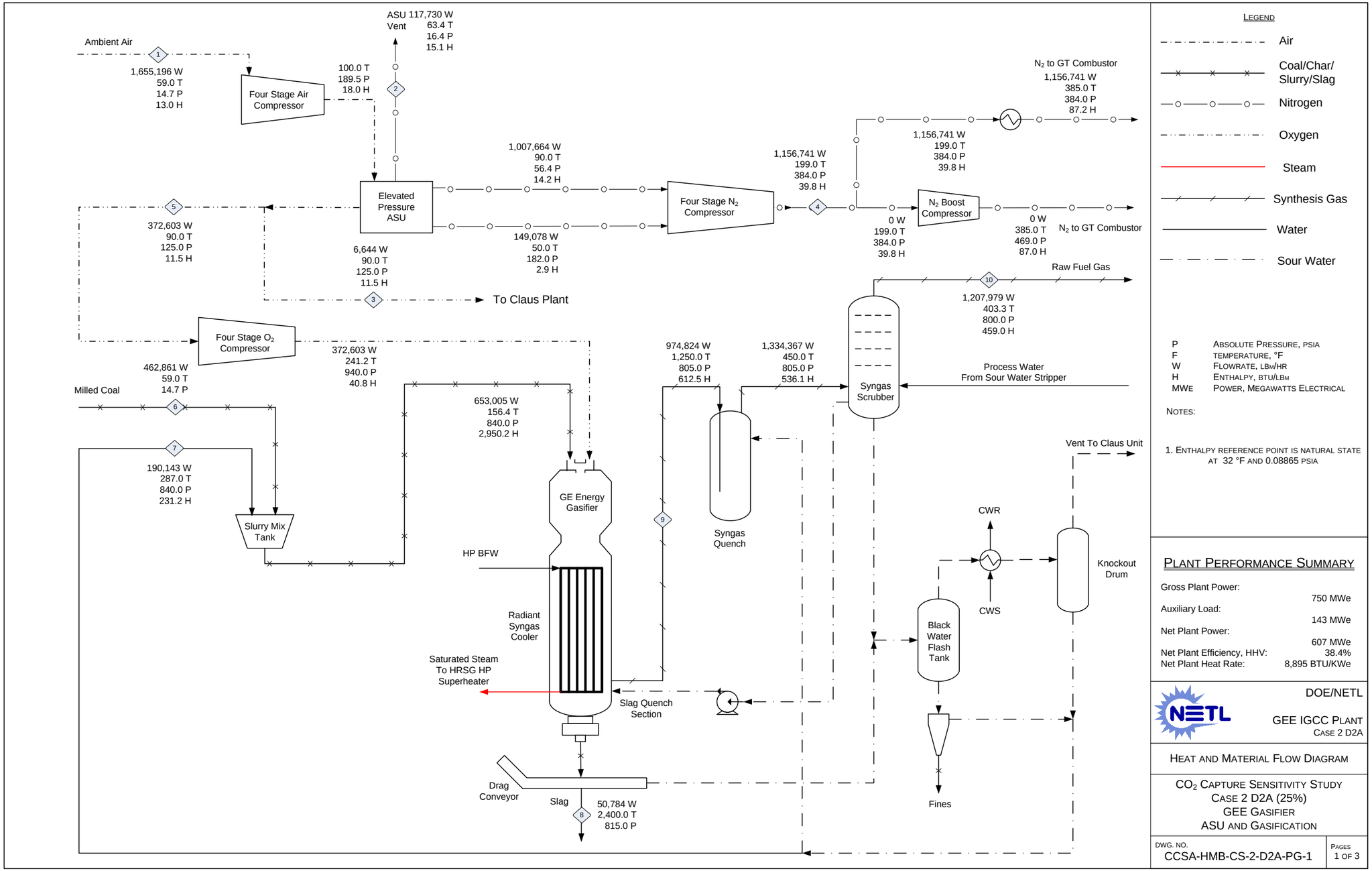

Exhibit 4-49 Case 2 D2A (25%) Heat and Mass Balance, Syngas Cleanup

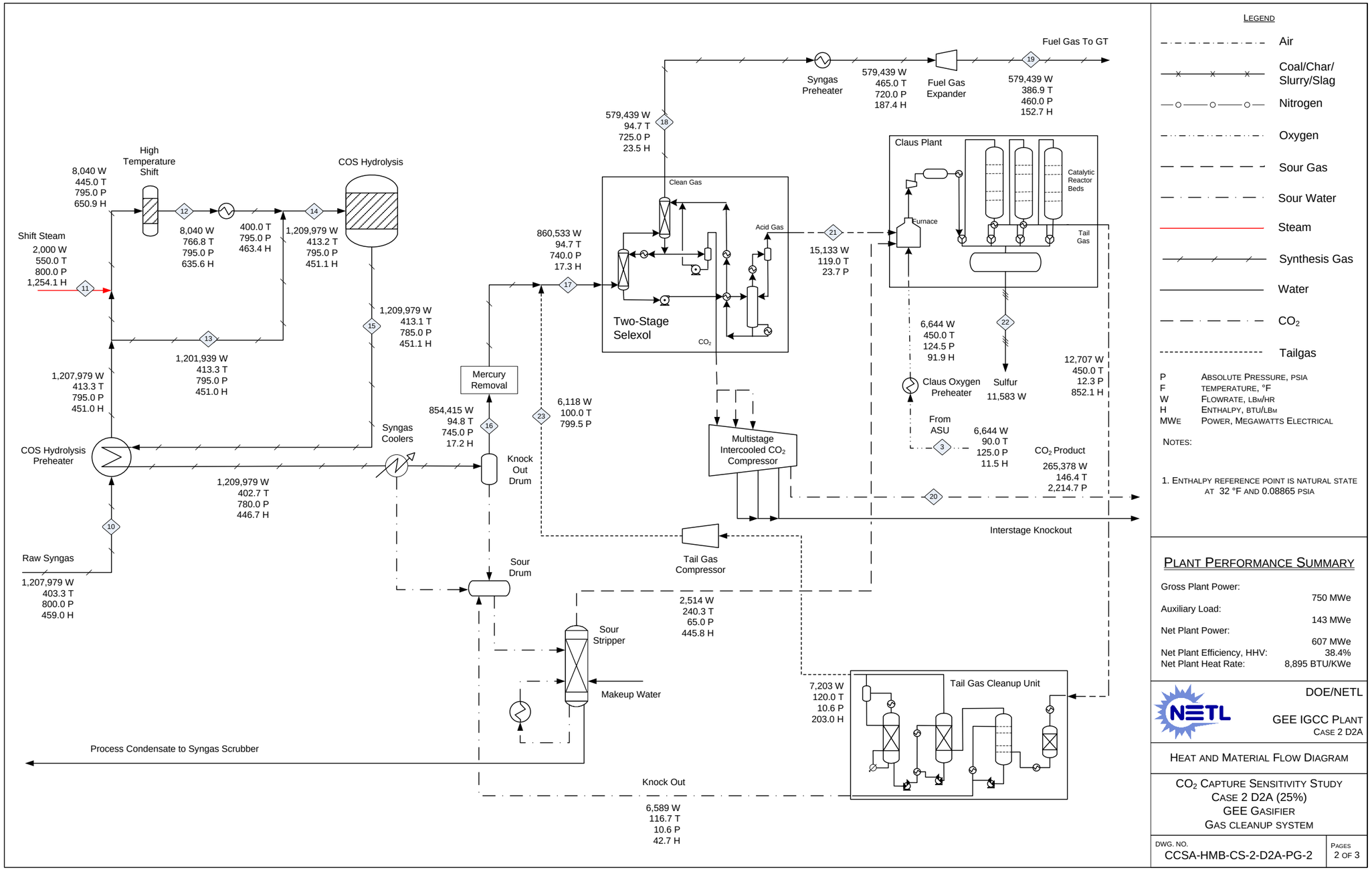

Exhibit 4-50 Case 2 D2A (25%) Heat and Mass Balance, Power Block

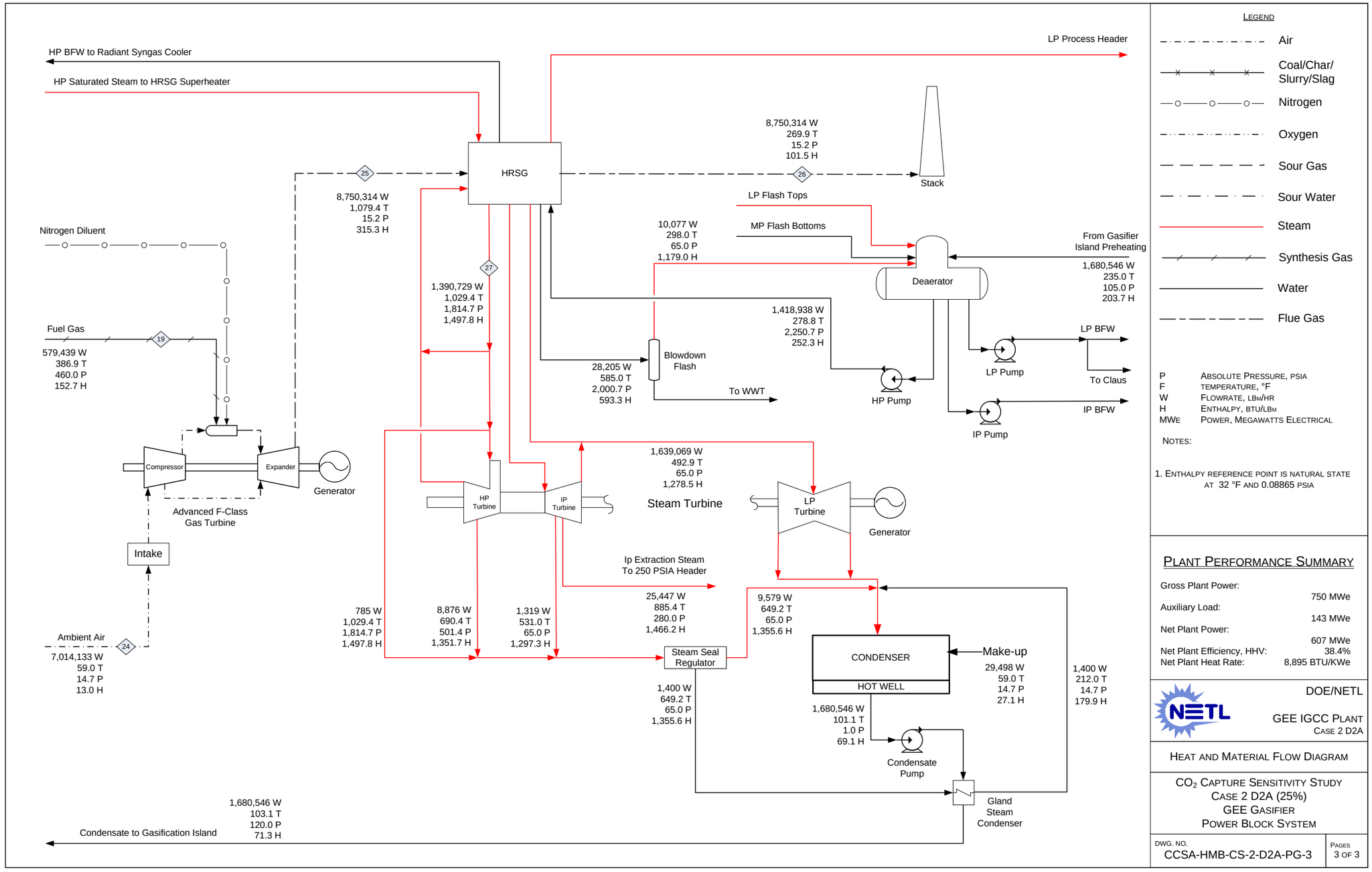

Exhibit 4-51 Case 2 D2B (45%) Heat and Mass Balance, GEE Gasifier and ASU

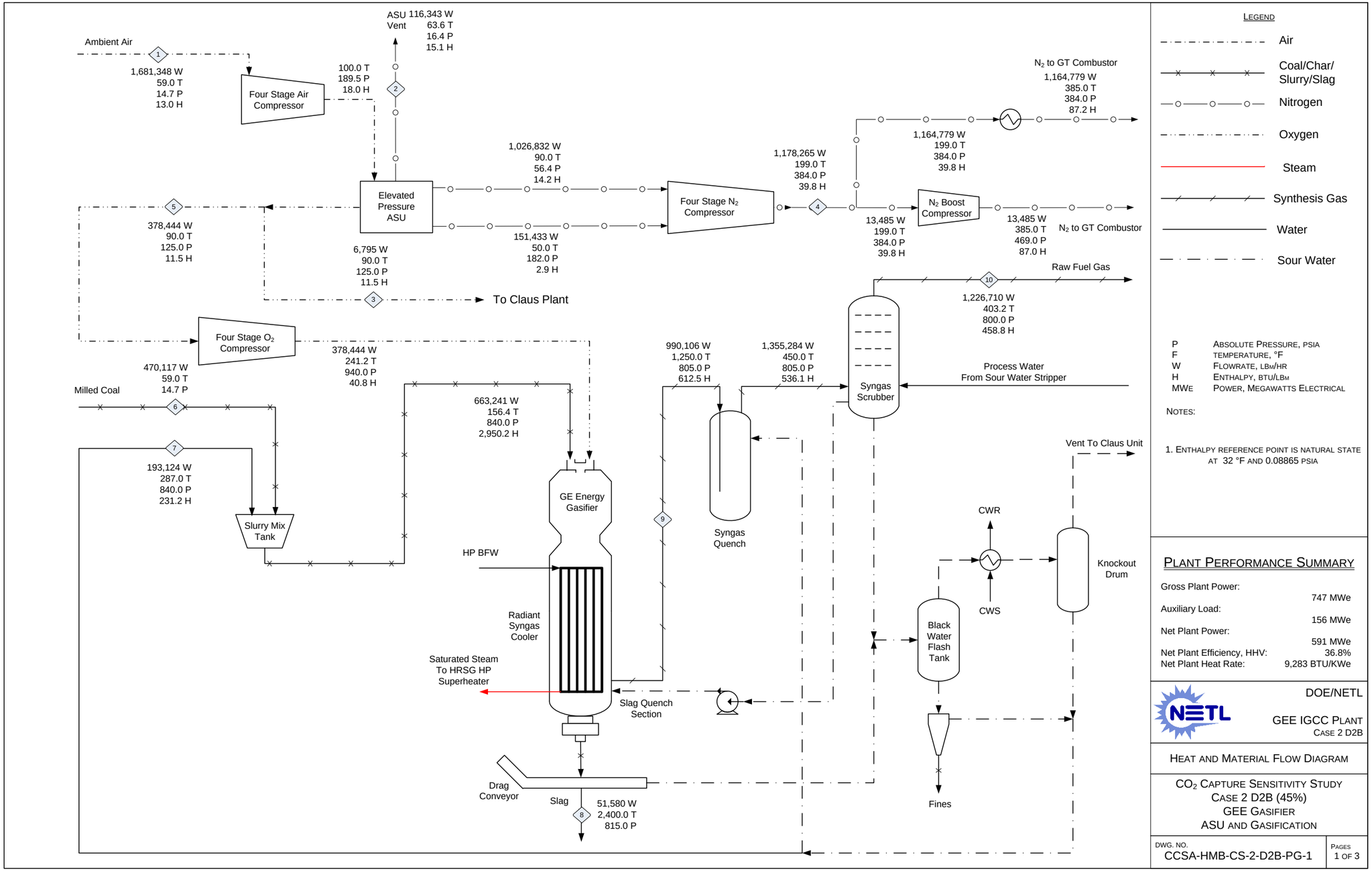

Exhibit 4-52 Case 2 D2B (45%) Heat and Mass Balance, Syngas Cleanup

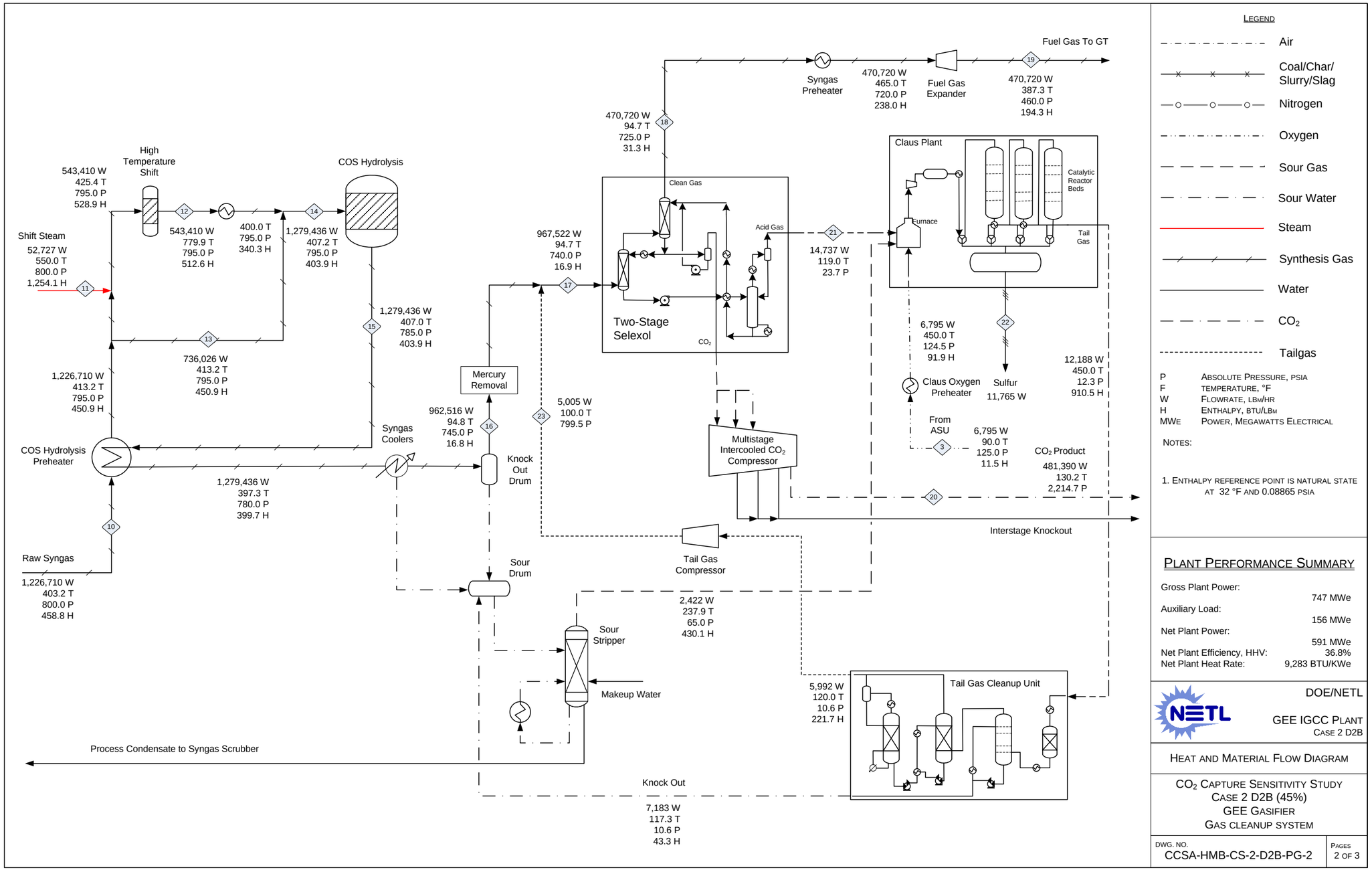

Exhibit 4-53 Case 2 D2B (45%) Heat and Mass Balance, Power Block

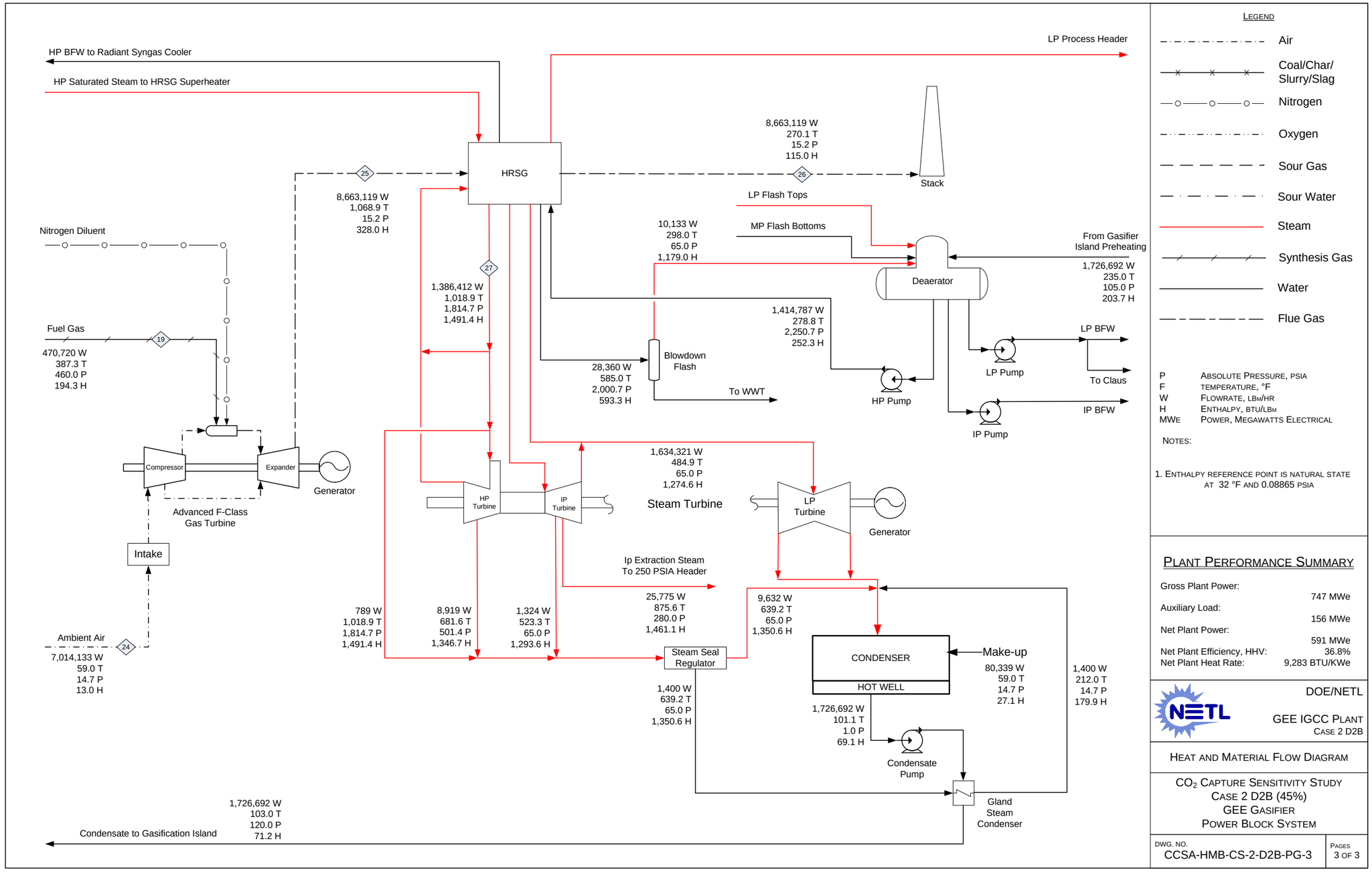

Exhibit 4-54 Case 2 D2C (60%) Heat and Mass Balance, GEE Gasifier and ASU

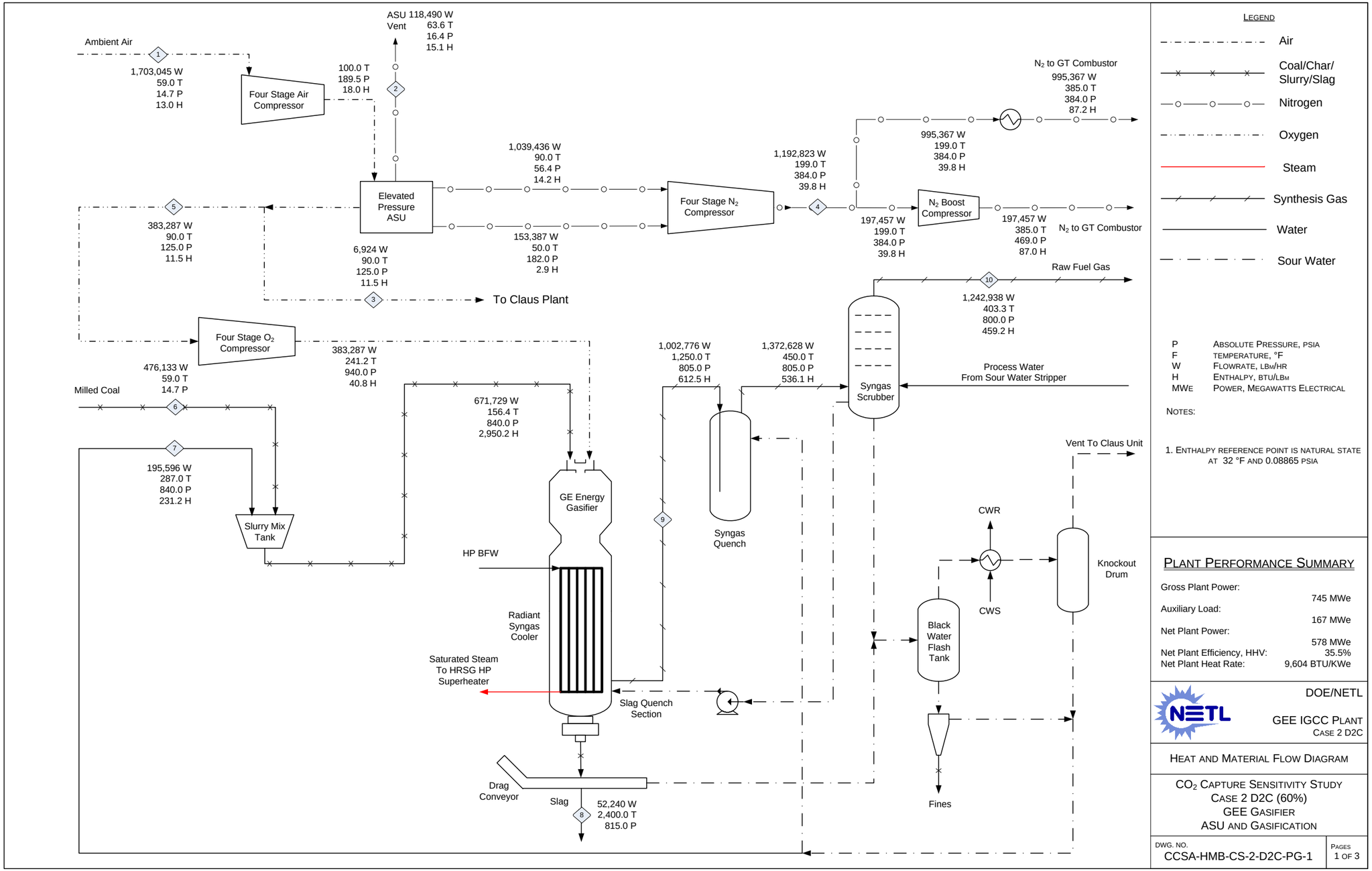

Exhibit 4-55 Case 2 D2C (60%) Heat and Mass Balance, Syngas Cleanup

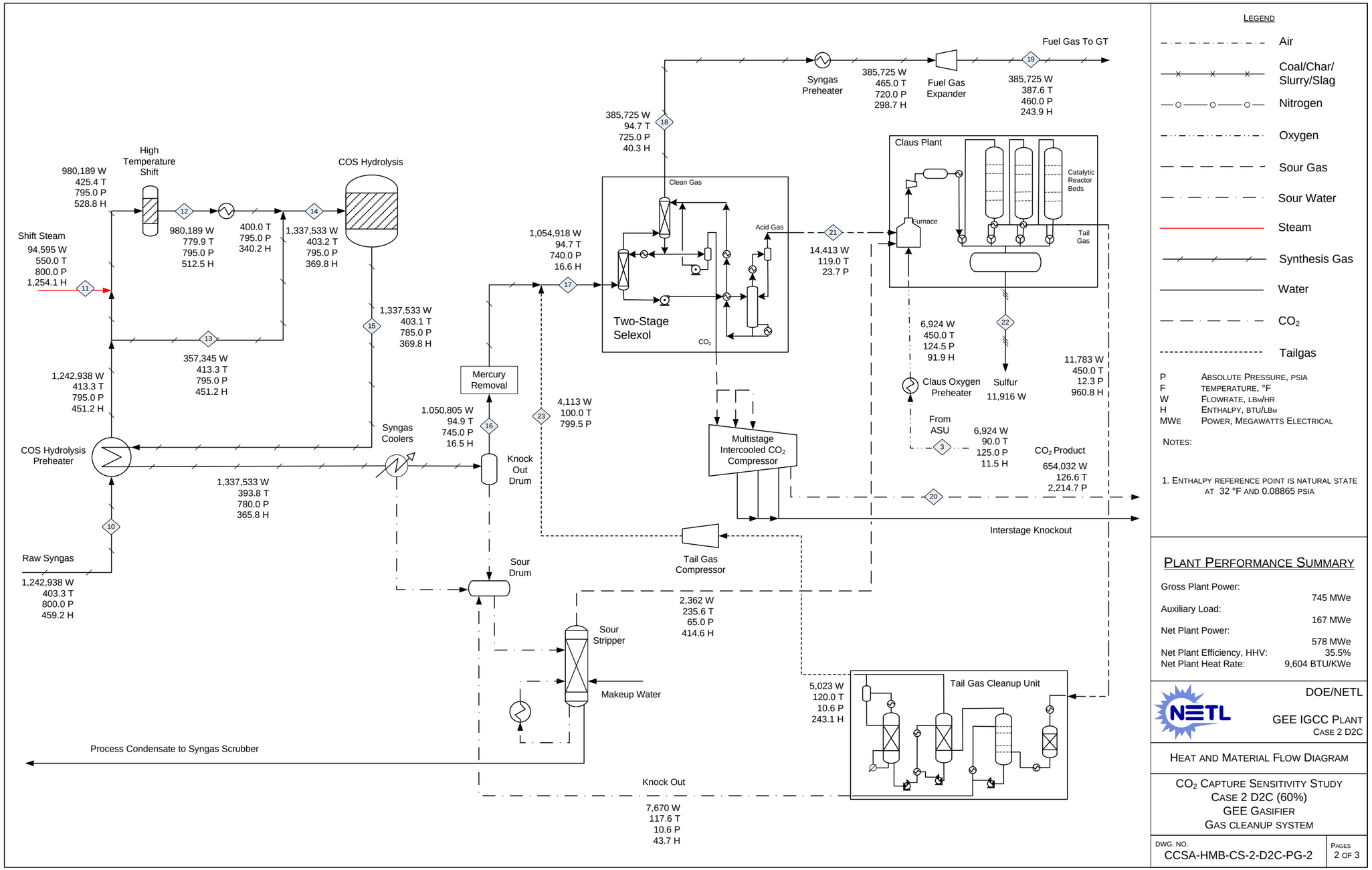

Exhibit 4-56 Case 2 D2C (60%) Heat and Mass Balance, Power Block

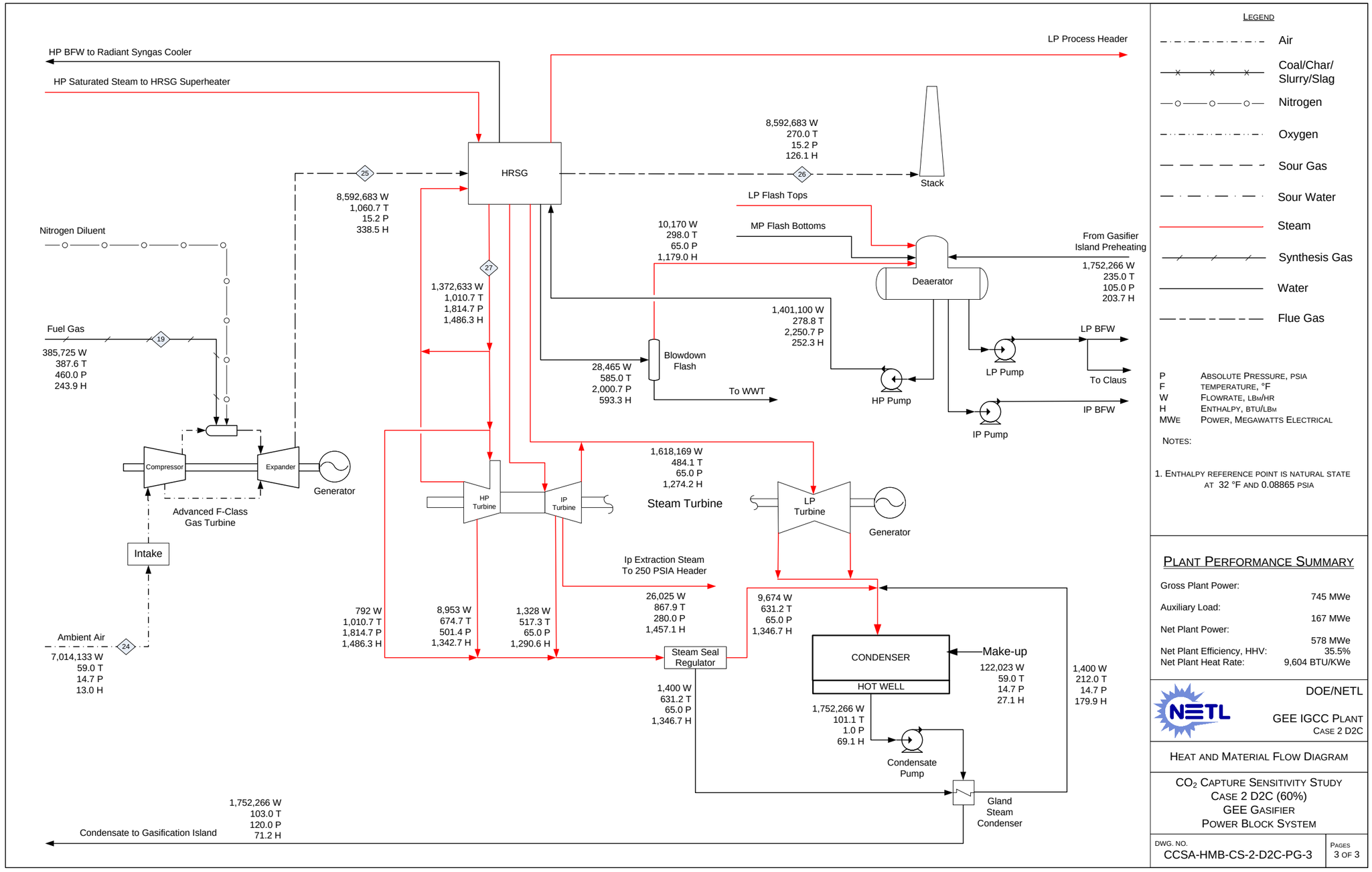

Exhibit 4-57 Case 2 D2D (75%) Heat and Mass Balance, GEE Gasifier and ASU

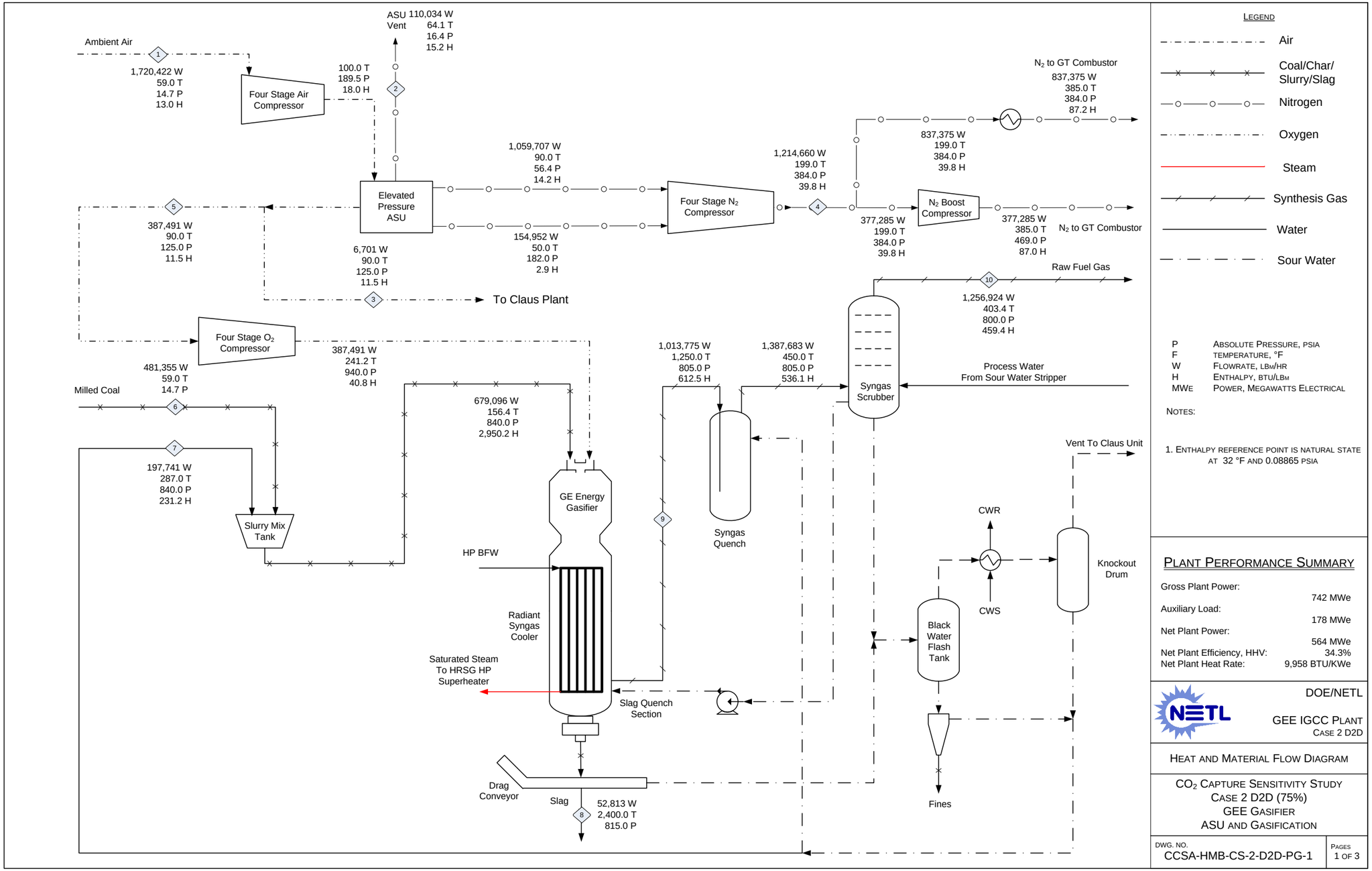

Exhibit 4-58 Case 2 D2D (75%) Heat and Mass Balance, Syngas Cleanup

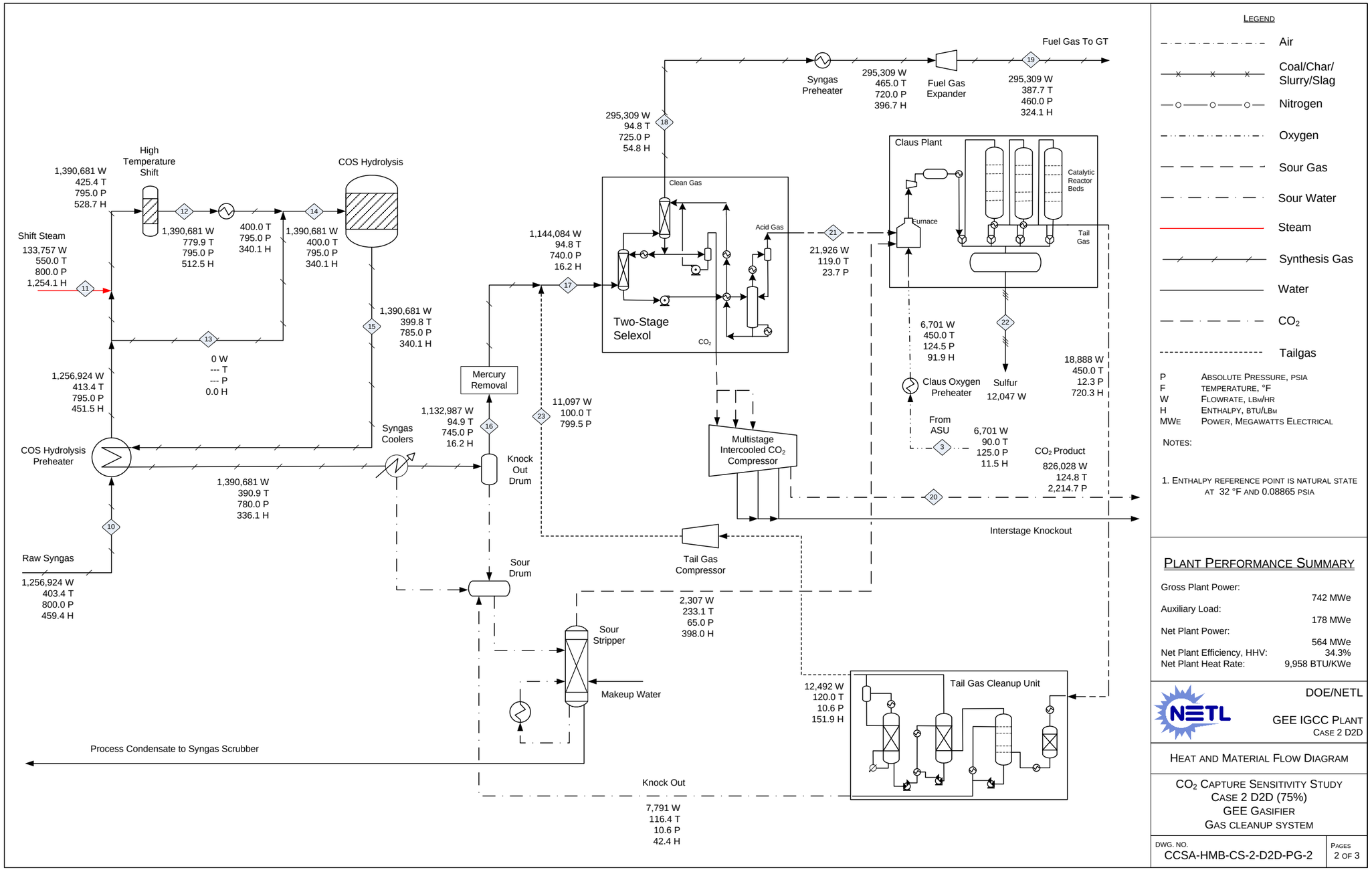

Exhibit 4-59 Case 2 D2D (75%) Heat and Mass Balance, Power Block

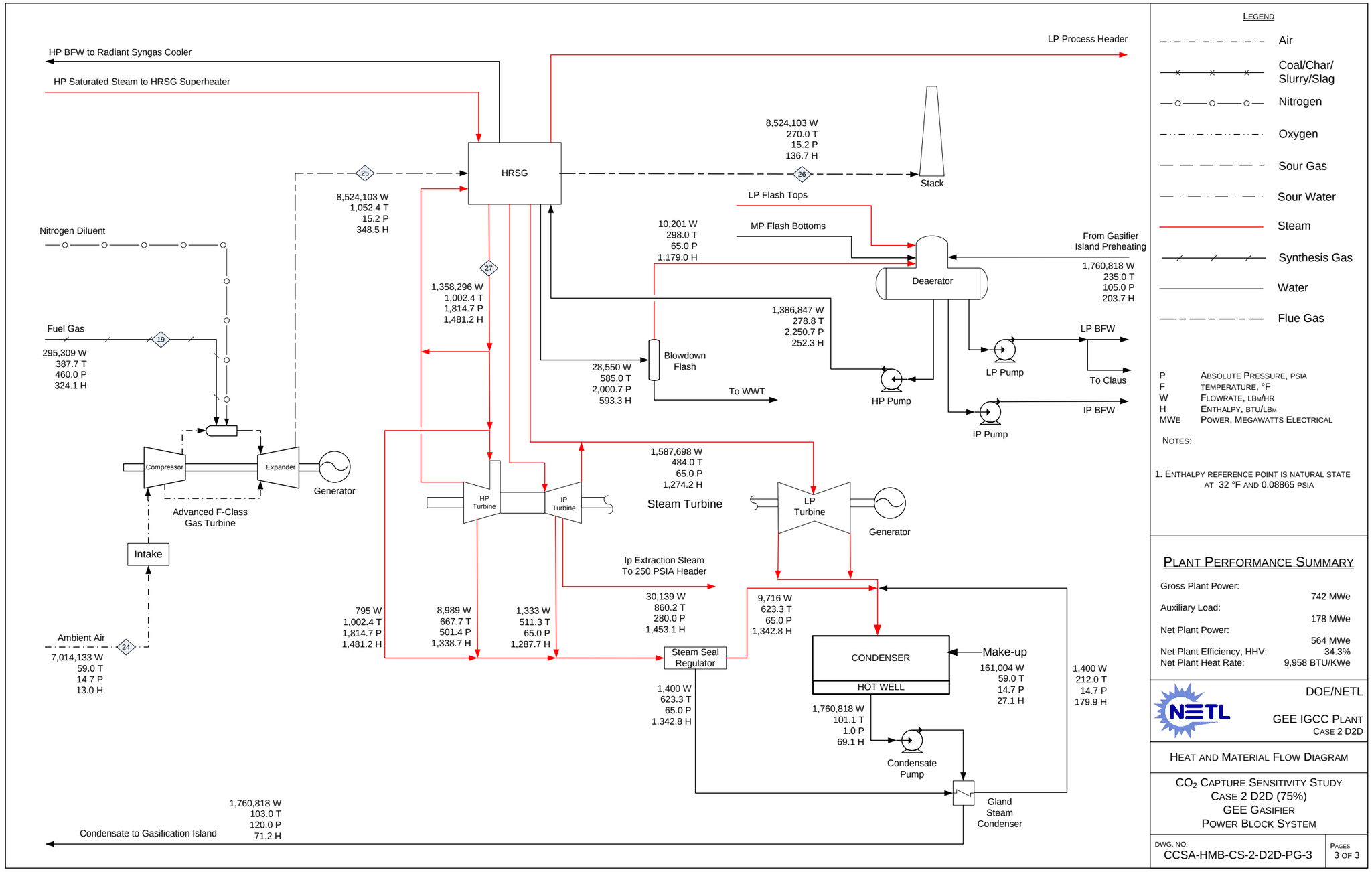

Exhibit 4-60 Case 2 D2A (25%) Energy Balance

	HHV	Sensible + Latent	Power	Total
Heat In GJ/hr (MMBtu/hr)				
Coal	5,697 (5,400)	4.8 (4.5)	0 (0)	5,702 (5,404)
ASU Air	0 (0)	22.7 (21.5)	0 (0)	23 (22)
GT Air	0 (0)	96.2 (91.2)	0 (0)	96 (91)
Water	0 (0)	66.9 (63.4)	0 (0)	67 (63)
Totals	**5,697 (5,400)**	**190.5 (180.5)**	**0 (0)**	**5,888 (5,580)**
Heat Out GJ/hr (MMBtu/hr)				
ASU Vent	0 (0)	1.9 (1.8)	0 (0)	2 (2)
Slag	88 (83)	36.0 (34.1)	0 (0)	124 (117)
Sulfur	49 (46)	0.6 (0.6)	0 (0)	49 (47)
CO_2	0 (0)	-13.1 (-12.4)	0 (0)	-13 (-12)
Gasifier Heat Loss	0 (0)	42.4 (40.2)	0 (0)	42 (40)
Combustion Turbine Heat Loss	0 (0)	63 (60)	0 (0)	63 (60)
HRSG Flue Gas	0 (0)	937 (889)	0 (0)	937 (889)
Cooling Tower*	0 (0)	2,073 (1,965)	0 (0)	2,073 (1,965)
Process Losses**	0 (0)	424 (402)	0 (0)	424 (402)
Net Power	0 (0)	0.0 (0.0)	2,185 (2,071)	2,185 (2,071)
Totals	**136 (129)**	**3,566 (3,380)**	**2,185 (2,071)**	**5,888 (5,580)**

Note: Italicized numbers are estimated
Reference conditions are 0 °C (32.02 °F) & 0.6 kPa (0.089 psia)

* Includes Condenser, Cooling Tower Blowdown, and the following Non-Condenser Cooling Tower Loads: ASU compressor intercoolers, CO_2 compressor intercoolers, sour water stripper condenser, syngas cooler (low level heat rejection), and extraction air cooler.

** Calculated by difference to close the energy balance.

Exhibit 4-61 Case 2 D2B (45%) Energy Balance

	HHV	Sensible + Latent	Power	Total
Heat In GJ/hr (MMBtu/hr)				
Coal	5,786 (5,484)	4.8 (4.6)	0 (0)	5,791 (5,489)
ASU Air	0 (0)	23.1 (21.8)	0 (0)	23 (22)
GT Air	0 (0)	96.2 (91.2)	0 (0)	96 (91)
Water	0 (0)	71.7 (68.0)	0 (0)	72 (68)
Totals	**5,786 (5,484)**	**195.8 (185.5)**	**0 (0)**	**5,982 (5,670)**
Heat Out GJ/hr (MMBtu/hr)				
ASU Vent	0 (0)	1.9 (1.8)	0 (0)	2 (2)
Slag	89 (84)	36.5 (34.6)	0 (0)	126 (119)
Sulfur	49 (47)	0.6 (0.6)	0 (0)	50 (47)
CO_2	0 (0)	-31.7 (-30.1)	0 (0)	-32 (-30)
Gasifier Heat Loss	0 (0)	43.1 (40.8)	0 (0)	43 (41)
Combustion Turbine Heat Loss	0 (0)	63 (60)	0 (0)	63 (60)
HRSG Flue Gas	0 (0)	1,051 (996)	0 (0)	1,051 (996)
Cooling Tower*	0 (0)	2,113 (2,003)	0 (0)	2,113 (2,003)
Process Losses**	0 (0)	439 (416)	0 (0)	439 (416)
Net Power	0 (0)	0.0 (0.0)	2,127 (2,016)	2,127 (2,016)
Totals	**139 (131)**	**3,717 (3,523)**	**2,127 (2,016)**	**5,982 (5,670)**

Note: Italicized numbers are estimated
Reference conditions are 0 °C (32.02 °F) & 0.6 kPa (0.089 psia)
* Includes Condenser, Cooling Tower Blowdown, and the following Non-Condenser Cooling Tower Loads: ASU compressor intercoolers, CO_2 compressor intercoolers, sour water stripper condenser, syngas cooler (low level heat rejection), and extraction air cooler.
** Calculated by difference to close the energy balance.

Exhibit 4-62 Case 2 D2C (60%) Energy Balance

	HHV	Sensible + Latent	Power	Total
Heat In GJ/hr (MMBtu/hr)				
Coal	5,860 (5,555)	4.9 (4.6)	0 (0)	5,865 (5,559)
ASU Air	0 (0)	23.4 (22.1)	0 (0)	23 (22)
GT Air	0 (0)	96.2 (91.2)	0 (0)	96 (91)
Water	0 (0)	75.4 (71.5)	0 (0)	75 (71)
Totals	**5,860 (5,555)**	**199.9 (189.4)**	**0 (0)**	**6,060 (5,744)**
Heat Out GJ/hr (MMBtu/hr)				
ASU Vent	0 (0)	1.9 (1.8)	0 (0)	2 (2)
Slag	90 (86)	37.0 (35.1)	0 (0)	127 (121)
Sulfur	50 (47)	0.6 (0.6)	0 (0)	51 (48)
CO_2	0 (0)	-45.9 (-43.5)	0 (0)	-46 (-43)
Gasifier Heat Loss	0 (0)	43.6 (41.4)	0 (0)	44 (41)
Combustion Turbine Heat Loss	0 (0)	63 (60)	0 (0)	63 (60)
HRSG Flue Gas	0 (0)	1,143 (1,083)	0 (0)	1,143 (1,083)
Cooling Tower*	0 (0)	2,139 (2,028)	0 (0)	2,139 (2,028)
Process Losses**	0 (0)	455 (431)	0 (0)	455 (431)
Net Power	0 (0)	0.0 (0.0)	2,082 (1,974)	2,082 (1,974)
Totals	**140 (133)**	**3,838 (3,637)**	**2,082 (1,974)**	**6,060 (5,744)**

Note: Italicized numbers are estimated
Reference conditions are 0 °C (32.02 °F) & 0.6 kPa (0.089 psia)
* Includes Condenser, Cooling Tower Blowdown, and the following Non-Condenser Cooling Tower Loads: ASU compressor intercoolers, CO_2 compressor intercoolers, sour water stripper condenser, syngas cooler (low level heat rejection), and extraction air cooler.
** Calculated by difference to close the energy balance.

Exhibit 4-63 Case 2 D2D (75%) Energy Balance

	HHV	Sensible + Latent	Power	Total
Heat In GJ/hr (MMBtu/hr)				
Coal	5,925 (5,615)	5.0 (4.7)	0 (0)	5,930 (5,620)
ASU Air	0 (0)	23.6 (22.4)	0 (0)	24 (22)
GT Air	0 (0)	96.2 (91.2)	0 (0)	96 (91)
Water	0 (0)	78.7 (74.6)	0 (0)	79 (75)
Totals	**5,925 (5,615)**	**203.4 (192.8)**	**0 (0)**	**6,128 (5,808)**
Heat Out GJ/hr (MMBtu/hr)				
ASU Vent	0 (0)	1.8 (1.7)	0 (0)	2 (2)
Slag	91 (86)	37.4 (35.4)	0 (0)	129 (122)
Sulfur	51 (48)	0.6 (0.6)	0 (0)	51 (49)
CO_2	0 (0)	-59.7 (-56.6)	0 (0)	-60 (-57)
Gasifier Heat Loss	0 (0)	44.1 (41.8)	0 (0)	44 (42)
Combustion Turbine Heat Loss	0 (0)	63 (60)	0 (0)	63 (60)
HRSG Flue Gas	0 (0)	1,230 (1,166)	0 (0)	1,230 (1,166)
Cooling Tower*	0 (0)	2,152 (2,040)	0 (0)	2,152 (2,040)
Process Losses**	0 (0)	486 (461)	0 (0)	486 (461)
Net Power	0 (0)	0.0 (0.0)	2,030 (1,924)	2,030 (1,924)
Totals	**142 (134)**	**3,956 (3,750)**	**2,030 (1,924)**	**6,128 (5,808)**

Note: Italicized numbers are estimated
Reference conditions are 0 °C (32.02 °F) & 0.6 kPa (0.089 psia)
* Includes Condenser, Cooling Tower Blowdown, and the following Non-Condenser Cooling Tower Loads: ASU compressor intercoolers, CO_2 compressor intercoolers, sour water stripper condenser, syngas cooler (low level heat rejection), and extraction air cooler.
** Calculated by difference to close the energy balance.

Exhibit 4-64 Case 2 D2A Energy Balance Sankey Diagram

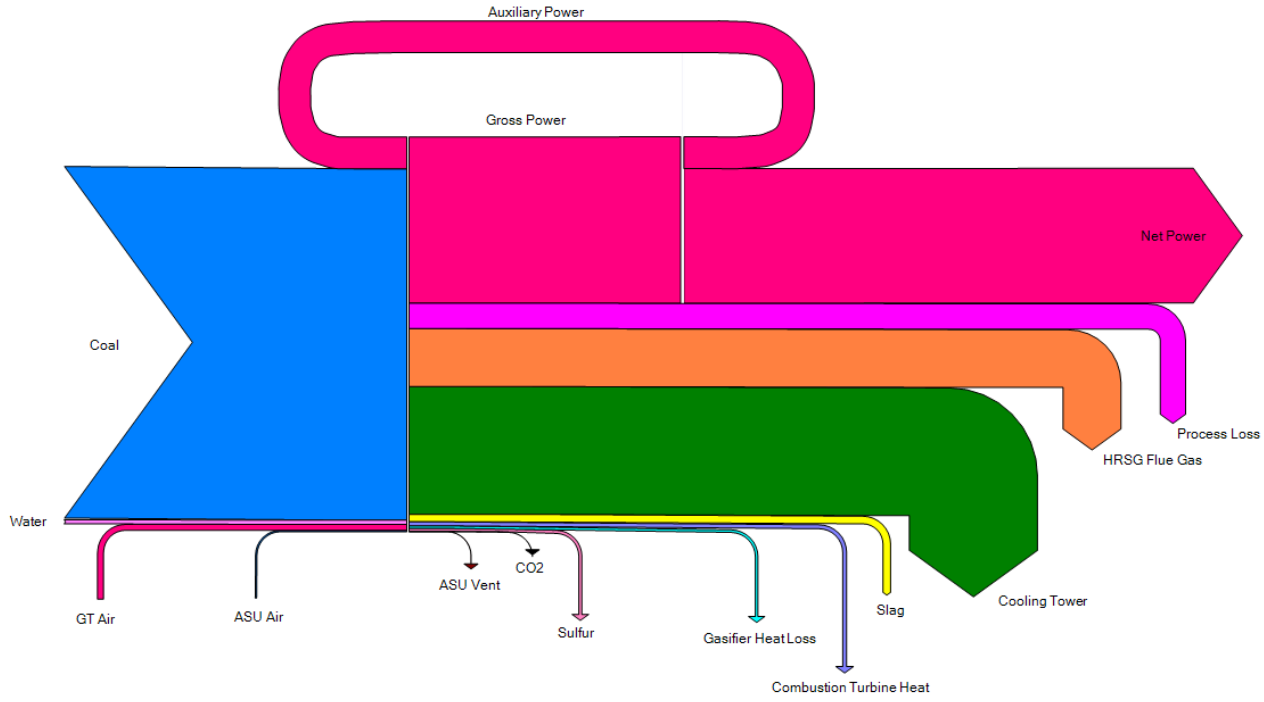

Exhibit 4-65 Case 2 D2B Energy Balance Sankey Diagram

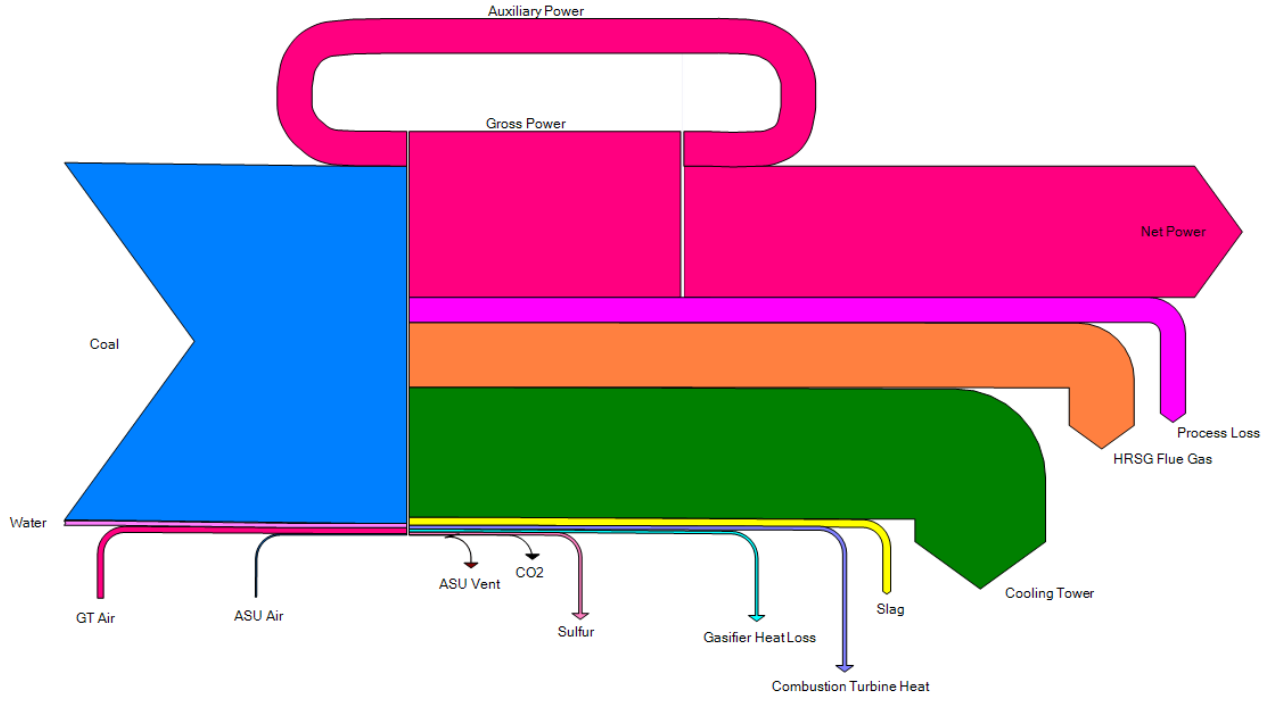

Exhibit 4-66 Case 2 D2C Energy Balance Sankey Diagram

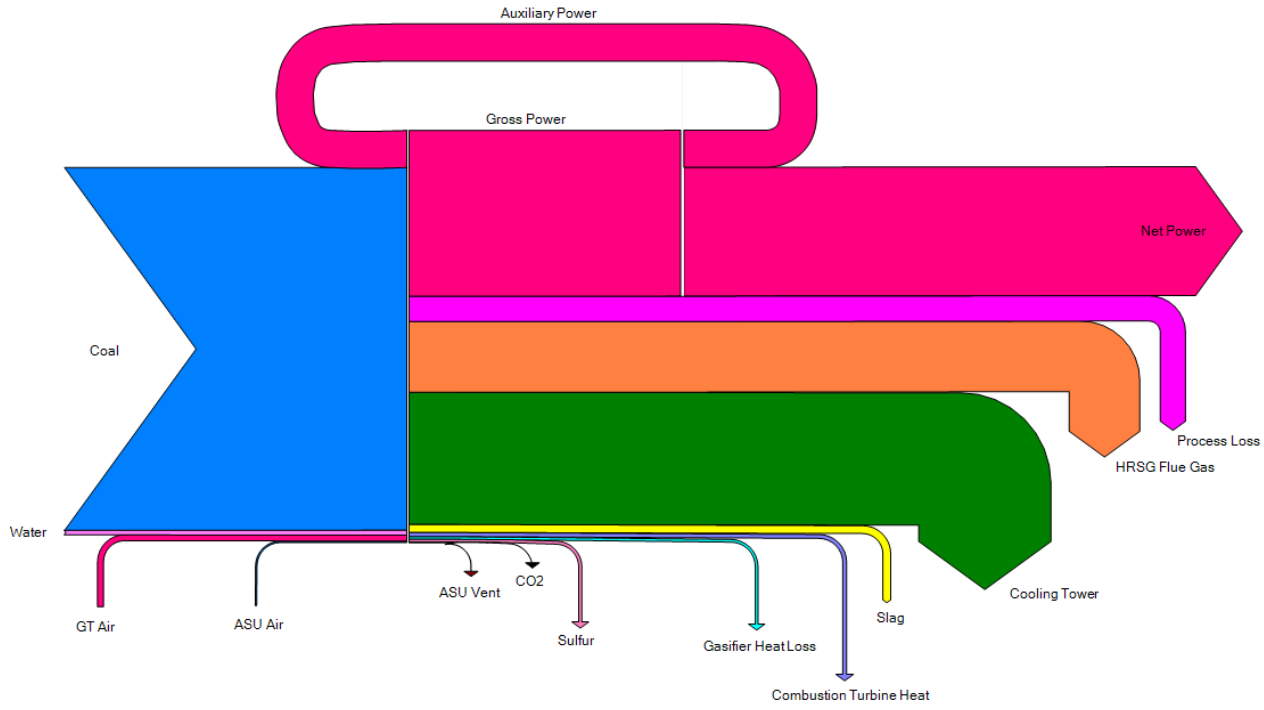

Exhibit 4-67 Case 2 D2D Energy Balance Sankey Diagram

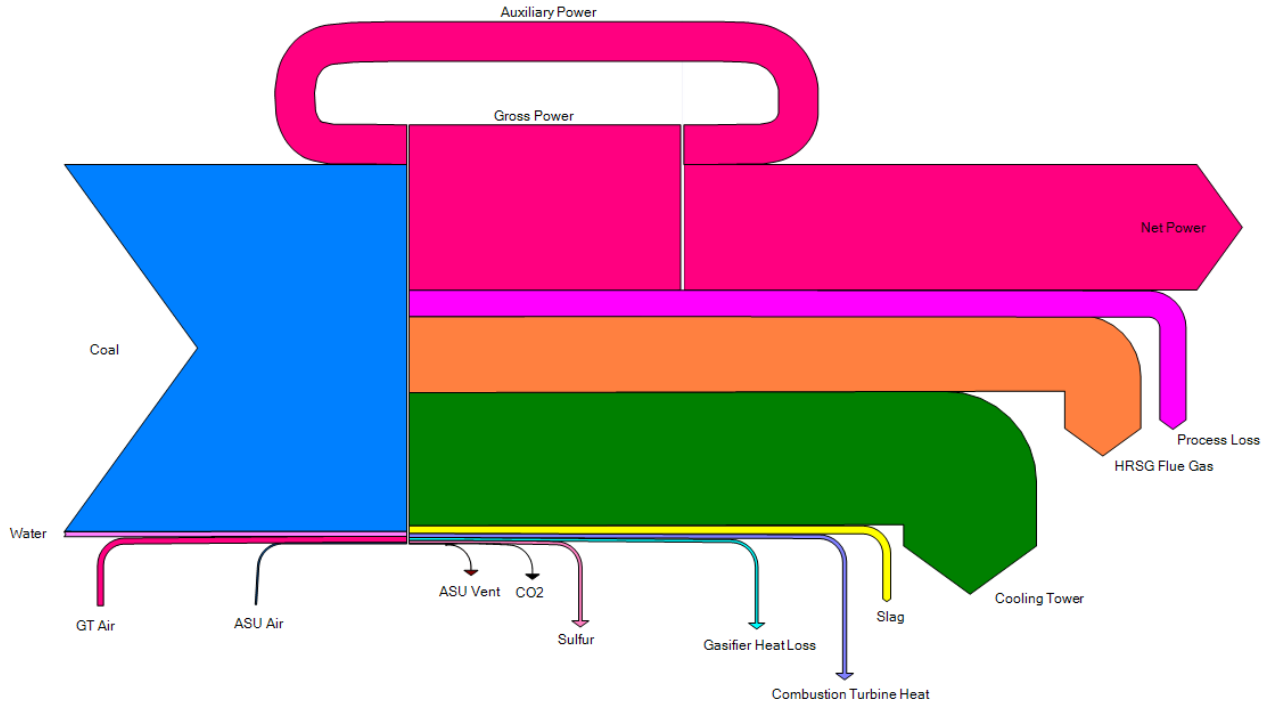

4.3.2.2 Major Equipment List for Case 2 D2

Major equipment items for Case 2 D2 (single WGS with bypass) are shown in the following tables. The accounts used in the equipment list correspond to the account numbers used in the cost estimates. In general, the design conditions include a 10 percent contingency for flows and heat duties and a 21 percent contingency for heads on pumps and fans.

ACCOUNT 1 COAL HANDLING

Equipment No.	Description	Type	Design Conditions				Opr Qty. (Spares)
			D2A	D2B	D2C	D2D	
1	Bottom Trestle Dumper and Receiving Hoppers	N/A	181 tonne (200 ton)	181 tonne (200 ton)	181 tonne (200 ton)	181 tonne (200 ton)	2 (0)
2	Feeder	Belt	572 tonne/hr (630 tph)	572 tonne/hr (630 tph)	572 tonne/hr (630 tph)	572 tonne/hr (630 tph)	2 (0)
3	Conveyor No. 1	Belt	1,134 tonne/hr (1,250 tph)	1,134 tonne/hr (1,250 tph)	1,134 tonne/hr (1,250 tph)	1,134 tonne/hr (1,250 tph)	1 (0)
4	Transfer Tower No. 1	Enclosed	N/A	N/A	N/A	N/A	1 (0)
5	Conveyor No. 2	Belt	1,134 tonne/hr (1,250 tph)	1,134 tonne/hr (1,250 tph)	1,134 tonne/hr (1,250 tph)	1,134 tonne/hr (1,250 tph)	1 (0)
6	As-Received Coal Sampling System	Two-stage	N/A	N/A	N/A	N/A	1 (0)
7	Stacker/Reclaimer	Traveling, linear	1,134 tonne/hr (1,250 tph)	1,134 tonne/hr (1,250 tph)	1,134 tonne/hr (1,250 tph)	1,134 tonne/hr (1,250 tph)	1 (0)
8	Reclaim Hopper	N/A	45 tonne (50 ton)	45 tonne (50 ton)	45 tonne (50 ton)	45 tonne (50 ton)	2 (1)
9	Feeder	Vibratory	172 tonne/hr (190 tph)	172 tonne/hr (190 tph)	181 tonne/hr (200 tph)	181 tonne/hr (200 tph)	2 (1)
10	Conveyor No. 3	Belt w/ tripper	345 tonne/hr (380 tph)	354 tonne/hr (390 tph)	354 tonne/hr (390 tph)	363 tonne/hr (400 tph)	1 (0)
11	Crusher Tower	N/A	N/A	N/A	N/A	N/A	1 (0)
12	Coal Surge Bin w/ Vent Filter	Dual outlet	172 tonne (190 ton)	172 tonne (190 ton)	181 tonne (200 ton)	181 tonne (200 ton)	2 (0)
13	Crusher	Impactor reduction	8 cm x 0 - 3 cm x 0 (3" x 0 - 1-1/4" x 0)	8 cm x 0 - 3 cm x 0 (3" x 0 - 1-1/4" x 0)	8 cm x 0 - 3 cm x 0 (3" x 0 - 1-1/4" x 0)	8 cm x 0 - 3 cm x 0 (3" x 0 - 1-1/4" x 0)	2 (0)
14	As-Fired Coal Sampling System	Swing hammer	N/A	N/A	N/A	N/A	1 (1)
15	Conveyor No. 4	Belt w/tripper	345 tonne/hr (380 tph)	354 tonne/hr (390 tph)	354 tonne/hr (390 tph)	363 tonne/hr (400 tph)	1 (0)
16	Transfer Tower No. 2	Enclosed	N/A	N/A	N/A	N/A	1 (0)
17	Conveyor No. 5	Belt w/ tripper	345 tonne/hr (380 tph)	354 tonne/hr (390 tph)	354 tonne/hr (390 tph)	363 tonne/hr (400 tph)	1 (0)
18	Coal Silo w/ Vent Filter and Slide Gates	Field erected	726 tonne (800 ton)	816 tonne (900 ton)	816 tonne (900 ton)	816 tonne (900 ton)	3 (0)

ACCOUNT 2 COAL PREPARATION AND FEED

Equipment No.	Description	Type	Design Condition				Opr Qty. (Spares)
			D2A	D2B	D2C	D2D	
1	Feeder	Vibratory	73 tonne/h (80 tph)	82 tonne/h (90 tph)	82 tonne/h (90 tph)	82 tonne/h (90 tph)	3 (0)
2	Conveyor No. 6	Belt w/tripper	227 tonne/h (250 tph)	236 tonne/h (260 tph)	236 tonne/h (260 tph)	236 tonne/h (260 tph)	1 (0)
3	Rod Mill Feed Hopper	Dual Outlet	463 tonne (510 ton)	472 tonne (520 ton)	472 tonne (520 ton)	481 tonne (530 ton)	1 (0)
4	Weigh Feeder	Belt	118 tonne/h (130 tph)	118 tonne/h (130 tph)	118 tonne/h (130 tph)	118 tonne/h (130 tph)	2 (0)
5	Rod Mill	Rotary	118 tonne/h (130 tph)	118 tonne/h (130 tph)	118 tonne/h (130 tph)	118 tonne/h (130 tph)	2 (0)
6	Slurry Water Storage Tank with Agitator	Field erected	285,044 liters (75,300 gal)	289,511 liters (76,480 gal)	293,220 liters (77,460 gal)	296,438 liters (78,310 gal)	2 (0)
7	Slurry Water Pumps	Centrifugal	795 lpm (210 gpm)	795 lpm (210 gpm)	833 lpm (220 gpm)	833 lpm (220 gpm)	2 (1)
8	Trommel Screen	Coarse	163 tonne/h (180 tph)	163 tonne/h (180 tph)	163 tonne/h (180 tph)	172 tonne/h (190 tph)	2 (0)

Equipment No.	Description	Type	Design Condition				Opr Qty. (Spares)
			D2A	D2B	D2C	D2D	
9	Rod Mill Discharge Tank with Agitator	Field erected	372,866 liters (98,500 gal)	378,696 liters (100,040 gal)	383,541 liters (101,320 gal)	387,781 liters (102,440 gal)	2 (0)
10	Rod Mill Product Pumps	Centrifugal	3,028 lpm (800 gpm)	3,028 lpm (800 gpm)	3,028 lpm (800 gpm)	3,407 lpm (900 gpm)	2 (2)
11	Slurry Storage Tank with Agitator	Field erected	1,118,598 liters (295,500 gal)	1,136,011 liters (300,100 gal)	1,150,774 liters (304,000 gal)	1,163,266 liters (307,300 gal)	2 (0)
12	Slurry Recycle Pumps	Centrifugal	6,057 lpm (1,600 gpm)	6,435 lpm (1,700 gpm)	6,435 lpm (1,700 gpm)	6,435 lpm (1,700 gpm)	2 (2)
13	Slurry Product Pumps	Positive displacement	3,028 lpm (800 gpm)	3,028 lpm (800 gpm)	3,028 lpm (800 gpm)	3,407 lpm (900 gpm)	2 (2)

ACCOUNT 3 FEEDWATER AND MISCELLANEOUS SYSTEMS AND EQUIPMENT

Equipment No.	Description	Type	Design Condition				Opr Qty. (Spares)
			D2A	D2B	D2C	D2D	
1	Demineralized Water Storage Tank	Vertical, cylindrical, outdoor	1,086,413 liters (287,000 gal)	1,090,199 liters (288,000 gal)	1,078,842 liters (285,000 gal)	1,067,486 liters (282,000 gal)	2 (0)
2	Condensate Pumps	Vertical canned	7,041 lpm @ 91 m H_2O (1,860 gpm @ 300 ft H_2O)	7,230 lpm @ 91 m H_2O (1,910 gpm @ 300 ft H_2O)	7,344 lpm @ 91 m H_2O (1,940 gpm @ 300 ft H_2O)	7,382 lpm @ 91 m H_2O (1,950 gpm @ 300 ft H_2O)	2 (1)
3	Deaerator (integral w/ HRSG)	Horizontal spray type	484,437 kg/hr (1,068,000 lb/hr)	495,323 kg/hr (1,092,000 lb/hr)	501,220 kg/hr (1,105,000 lb/hr)	505,755 kg/hr (1,115,000 lb/hr)	2 (0)
4	Intermediate Pressure Feedwater Pump	Horizontal centrifugal, single stage	8,101 lpm @ 27 m H_2O (2,140 gpm @ 90 ft H_2O)	8,139 lpm @ 27 m H_2O (2,150 gpm @ 90 ft H_2O)	7,912 lpm @ 27 m H_2O (2,090 gpm @ 90 ft H_2O)	7,684 lpm @ 27 m H_2O (2,030 gpm @ 90 ft H_2O)	2 (1)
5	High Pressure Feedwater Pump No. 1	Barrel type, multi-stage, centrifugal	HP water: 6,132 lpm @ 1,859 m H_2O (1,620 gpm @ 6,100 ft H_2O)	HP water: 6,132 lpm @ 1,859 m H_2O (1,620 gpm @ 6,100 ft H_2O)	HP water: 6,057 lpm @ 1,859 m H_2O (1,600 gpm @ 6,100 ft H_2O)	HP water: 5,981 lpm @ 1,859 m H_2O (1,580 gpm @ 6,100 ft H_2O)	2 (1)
6	High Pressure Feedwater Pump No. 2	Barrel type, multi-stage, centrifugal	IP water: 1,476 lpm @ 223 m H_2O (390 gpm @ 730 ft H_2O)	IP water: 1,514 lpm @ 223 m H_2O (400 gpm @ 730 ft H_2O)	IP water: 1,628 lpm @ 223 m H_2O (430 gpm @ 730 ft H_2O)	IP water: 1,703 lpm @ 223 m H_2O (450 gpm @ 730 ft H_2O)	2 (1)
7	Auxiliary Boiler	Shop fabricated, water tube	18,144 kg/hr, 2.8 MPa, 343°C (40,000 lb/hr, 400 psig, 650°F)	18,144 kg/hr, 2.8 MPa, 343°C (40,000 lb/hr, 400 psig, 650°F)	18,144 kg/hr, 2.8 MPa, 343°C (40,000 lb/hr, 400 psig, 650°F)	18,144 kg/hr, 2.8 MPa, 343°C (40,000 lb/hr, 400 psig, 650°F)	1 (0)
8	Service Air Compressors	Flooded Screw	28 m^3/min @ 0.7 MPa (1,000 scfm @ 100 psig)	28 m^3/min @ 0.7 MPa (1,000 scfm @ 100 psig)	28 m^3/min @ 0.7 MPa (1,000 scfm @ 100 psig)	28 m^3/min @ 0.7 MPa (1,000 scfm @ 100 psig)	2 (1)
9	Instrument Air Dryers	Duplex, regenerative	28 m^3/min (1,000 scfm)	28 m^3/min (1,000 scfm)	28 m^3/min (1,000 scfm)	28 m^3/min (1,000 scfm)	2 (1)
10	Closed Cylce Cooling Heat Exchangers	Plate and frame	248 GJ/hr (234.6264965 MMBtu/hr) each	275 GJ/hr (260.9758943 MMBtu/hr) each	299 GJ/hr (283.58088495 MMBtu/hr) each	324 GJ/hr (306.6532524 MMBtu/hr) each	2 (0)
11	Closed Cycle Cooling Water Pumps	Horizontal centrifugal	88,957 lpm @ 21 m H_2O (23,500 gpm @ 70 ft H_2O)	98,799 lpm @ 21 m H_2O (26,100 gpm @ 70 ft H_2O)	107,506 lpm @ 21 m H_2O (28,400 gpm @ 70 ft H_2O)	116,212 lpm @ 21 m H_2O (30,700 gpm @ 70 ft H_2O)	2 (1)
12	Engine-Driven Fire Pump	Vertical turbine, diesel engine	3,785 lpm @ 107 m H_2O (1,000 gpm @ 350 ft H_2O)	3,785 lpm @ 107 m H_2O (1,000 gpm @ 350 ft H_2O)	3,785 lpm @ 107 m H_2O (1,000 gpm @ 350 ft H_2O)	3,785 lpm @ 107 m H_2O (1,000 gpm @ 350 ft H_2O)	1 (1)
13	Fire Service Booster Pump	Two-stage horizontal centrifugal	2,650 lpm @ 76 m H_2O (700 gpm @ 250 ft H_2O)	2,650 lpm @ 76 m H_2O (700 gpm @ 250 ft H_2O)	2,650 lpm @ 76 m H_2O (700 gpm @ 250 ft H_2O)	2,650 lpm @ 76 m H_2O (700 gpm @ 250 ft H_2O)	1 (1)
14	Raw Water Pumps	Stainless steel, single suction	4,580 lpm @ 18 m H_2O (1,210 gpm @ 60 ft H_2O)	4,921 lpm @ 18 m H_2O (1,300 gpm @ 60 ft H_2O)	5,186 lpm @ 18 m H_2O (1,370 gpm @ 60 ft H_2O)	5,413 lpm @ 18 m H_2O (1,430 gpm @ 60 ft H_2O)	2 (1)
15	Ground Water Pumps	Stainless steel, single suction	3,028 lpm @ 268 m H_2O (800 gpm @ 880 ft H_2O)	3,293 lpm @ 268 m H_2O (870 gpm @ 880 ft H_2O)	2,574 lpm @ 268 m H_2O (680 gpm @ 880 ft H_2O)	2,725 lpm @ 268 m H_2O (720 gpm @ 880 ft H_2O)	3 (1)
16	Filtered Water Pumps	Stainless steel, single suction	2,082 lpm @ 49 m H_2O (550 gpm @ 160 ft H_2O)	2,309 lpm @ 49 m H_2O (610 gpm @ 160 ft H_2O)	2,498 lpm @ 49 m H_2O (660 gpm @ 160 ft H_2O)	2,688 lpm @ 49 m H_2O (710 gpm @ 160 ft H_2O)	2 (1)
17	Filtered Water Tank	Vertical, cylindrical	999,349 liter (264,000 gal)	1,112,911 liter (294,000 gal)	1,207,546 liter (319,000 gal)	1,290,825 liter (341,000 gal)	2 (0)
18	Makeup Water Demineralizer	Anion, cation, and mixed bed	303 lpm (80 gpm)	530 lpm (140 gpm)	681 lpm (180 gpm)	871 lpm (230 gpm)	2 (0)

Equipment No.	Description	Type	Design Condition				Opr Qty. (Spares)
			D2A	D2B	D2C	D2D	
19	Liquid Waste Treatment System		10 years, 24-hour storm	10 years, 24-hour storm	10 years, 24-hour storm	10 years, 24-hour storm	1 (0)

ACCOUNT 4 GASIFIER, ASU AND ACCESSORIES INCLUDING LOW TEMPERATURE HEAT RECOVERY

Equipment No.	Description	Type	Design Condition				Opr Qty. (Spares)
			D2A	D2B	D2C	D2D	
1	Gasifier	Pressurized slurry-feed, entrained bed	2,812 tonne/day, 5.6 MPa (3,100 tpd, 814.96 psia)	2,812 tonne/day, 5.6 MPa (3,100 tpd, 814.96 psia)	2,812 tonne/day, 5.6 MPa (3,100 tpd, 814.96 psia)	2,903 tonne/day, 5.6 MPa (3,200 tpd, 814.96 psia)	2 (0)
2	Synthesis Gas Cooler	Vertical downflow radiant heat exchanger with outlet quench chamber	243,126 kg/hr (536,000 lb/hr)	247,208 kg/hr (545,000 lb/hr)	250,383 kg/hr (552,000 lb/hr)	253,105 kg/hr (558,000 lb/hr)	2 (0)
3	Synthesis Gas Cyclone	High efficiency	332,937 kg/hr (734,000 lb/hr) Design efficiency 90%	337,926 kg/hr (745,000 lb/hr) Design efficiency 90%	342,462 kg/hr (755,000 lb/hr) Design efficiency 90%	346,091 kg/hr (763,000 lb/hr) Design efficiency 90%	2 (0)
4	Candle Filter	Pressurized filter with pulse-jet cleaning	metallic filters	metallic filters	metallic filters	metallic filters	2 (0)
5	Syngas Scrubber Including Sour Water Stripper	Vertical upflow	332,937 kg/hr (734,000 lb/hr)	337,926 kg/hr (745,000 lb/hr)	342,462 kg/hr (755,000 lb/hr)	346,091 kg/hr (763,000 lb/hr)	2 (0)
6	Raw Gas Coolers	Shell and tube with condensate drain	288,031 kg/hr (635,000 lb/hr)	319,329 kg/hr (704,000 lb/hr)	333,844 kg/hr (736,000 lb/hr)	346,998 kg/hr (765,000 lb/hr)	8 (0)
7	Raw Gas Knockout Drum	Vertical with mist eliminator	213,642 kg/hr, 35°C, 5.1 MPa (471,000 lb/hr, 95°F, 745 psia)	240,404 kg/hr, 35°C, 5.2 MPa (530,000 lb/hr, 95°F, 750 psia)	262,630 kg/hr, 35°C, 5.1 MPa (579,000 lb/hr, 95°F, 745 psia)	283,042 kg/hr, 35°C, 5.1 MPa (624,000 lb/hr, 95°F, 745 psia)	2 (0)
8	Flare Stack	Self-supporting, carbon steel, stainless steel top, pilot ignition	332,937 kg/hr (734,000 lb/hr) syngas	337,926 kg/hr (745,000 lb/hr) syngas	342,462 kg/hr (755,000 lb/hr) syngas	346,091 kg/hr (763,000 lb/hr) syngas	2 (0)
9	ASU Main Air Compressor	Centrifugal, multi-stage	5,663 m^3/min @ 1.3 MPa (200,000 scfm @ 190 psia)	5,748 m^3/min @ 1.3 MPa (203,000 scfm @ 190 psia)	5,805 m^3/min @ 1.3 MPa (205,000 scfm @ 190 psia)	5,862 m^3/min @ 1.3 MPa (207,000 scfm @ 190 psia)	2 (0)
10	Cold Box	Vendor design	2,268 tonne/day (2,500 tpd) of 95% purity oxygen	2,268 tonne/day (2,500 tpd) of 95% purity oxygen	2,359 tonne/day (2,600 tpd) of 95% purity oxygen	2,359 tonne/day (2,600 tpd) of 95% purity oxygen	2 (0)
11	Oxygen Compressor	Centrifugal, multi-stage	1,133 m^3/min (40,000 scfm) Suction - 0.9 MPa (130 psia) Discharge - 6.5 MPa (940 psia)	1,161 m^3/min (41,000 scfm) Suction - 0.9 MPa (130 psia) Discharge - 6.5 MPa (940 psia)	1,161 m^3/min (41,000 scfm) Suction - 0.9 MPa (130 psia) Discharge - 6.5 MPa (940 psia)	1,189 m^3/min (42,000 scfm) Suction - 0.9 MPa (130 psia) Discharge - 6.5 MPa (940 psia)	2 (0)
12	Primary Nitrogen Compressor	Centrifugal, multi-stage	3,540 m^3/min (125,000 scfm) Suction - 0.4 MPa (60 psia) Discharge - 2.7 MPa (390 psia)	3,596 m^3/min (127,000 scfm) Suction - 0.4 MPa (60 psia) Discharge - 2.7 MPa (390 psia)	3,653 m^3/min (129,000 scfm) Suction - 0.4 MPa (60 psia) Discharge - 2.7 MPa (390 psia)	3,710 m^3/min (131,000 scfm) Suction - 0.4 MPa (60 psia) Discharge - 2.7 MPa (390 psia)	2 (0)
13	Secondary Nitrogen Compressor	Centrifugal, single-stage	538 m^3/min (19,000 scfm) Suction - 1.2 MPa (180 psia) Discharge - 2.7 MPa (390 psia)	538 m^3/min (19,000 scfm) Suction - 1.2 MPa (180 psia) Discharge - 2.7 MPa (390 psia)	538 m^3/min (19,000 scfm) Suction - 1.2 MPa (180 psia) Discharge - 2.7 MPa (390 psia)	538 m^3/min (19,000 scfm) Suction - 1.2 MPa (180 psia) Discharge - 2.7 MPa (390 psia)	2 (0)
14	Syngas Dilution Nitrogen Boost Compressor	Centrifugal, single-stage	0 m^3/min (0 scfm) Suction - 2.6 MPa (380 psia) Discharge - 3.2 MPa (470 psia)	57 m^3/min (2,000 scfm) Suction - 2.6 MPa (380 psia) Discharge - 3.2 MPa (470 psia)	680 m^3/min (24,000 scfm) Suction - 2.6 MPa (380 psia) Discharge - 3.2 MPa (470 psia)	1,331 m^3/min (47,000 scfm) Suction - 2.6 MPa (380 psia) Discharge - 3.2 MPa (470 psia)	2 (0)

ACCOUNT 5A SYNGAS CLEANUP

Equipment No.	Description	Type	Design Condition				Opr Qty. (Spares)
			D2A	D2B	D2C	D2D	
1	Mercury Adsorber	Sulfated carbon bed	213,188 kg/hr (470,000 lb/hr) 35°C (95°F) 5.1 MPa (745 psia)	239,950 kg/hr (529,000 lb/hr) 35°C (95°F) 5.1 MPa (745 psia)	262,176 kg/hr (578,000 lb/hr) 35°C (95°F) 5.1 MPa (745 psia)	282,588 kg/hr (623,000 lb/hr) 35°C (95°F) 5.1 MPa (745 psia)	2 (0)
2	Sulfur Plant	Claus type	139 tonne/day (153 tpd)	141 tonne/day (155 tpd)	143 tonne/day (157 tpd)	144 tonne/day (159 tpd)	1 (0)
3	Water Gas Shift Reactor	Fixed bed, catalytic	1,814 kg/hr (4,000 lb/hr) 232°C (450°F) 5.4 MPa (790 psia)	135,624 kg/hr (299,000 lb/hr) 221°C (430°F) 5.4 MPa (790 psia)	244,486 kg/hr (539,000 lb/hr) 221°C (430°F) 5.4 MPa (790 psia)	346,998 kg/hr (765,000 lb/hr) 221°C (430°F) 5.4 MPa (790 psia)	2 (0)
4	Shift Reactor Heat Recovery Exchangers	Shell and Tube	Exchanger 1: 02 GJ/hr (02 MMBtu/hr) Exchanger 2: 6 GJ/hr (6 MMBtu/hr)	Exchanger 1: 109 GJ/hr (103 MMBtu/hr) Exchanger 2: 6 GJ/hr (6 MMBtu/hr)	Exchanger 1: 196 GJ/hr (186 MMBtu/hr) Exchanger 2: 6 GJ/hr (6 MMBtu/hr)	Exchanger 1: 278 GJ/hr (264 MMBtu/hr) Exchanger 2: 6 GJ/hr (6 MMBtu/hr)	2 (0)
5	COS Hydrolysis Reactor	Fixed bed, catalytic	301,639 kg/hr (665,000 lb/hr) 210°C (410°F) 5.4 MPa (790 psia)	319,329 kg/hr (704,000 lb/hr) 210°C (410°F) 5.4 MPa (790 psia)	333,844 kg/hr (736,000 lb/hr) 204°C (400°F) 5.4 MPa (790 psia)	346,998 kg/hr (765,000 lb/hr) 204°C (400°F) 5.4 MPa (790 psia)	2 (0)
6	Acid Gas Removal Plant	Two-stage Selexol	214,549 kg/hr (473,000 lb/hr) 35°C (95°F) 5.1 MPa (740 psia)	241,311 kg/hr (532,000 lb/hr) 35°C (95°F) 5.1 MPa (740 psia)	263,084 kg/hr (580,000 lb/hr) 35°C (95°F) 5.1 MPa (740 psia)	285,310 kg/hr (629,000 lb/hr) 35°C (95°F) 5.1 MPa (740 psia)	2 (0)
7	Hydrogenation Reactor	Fixed bed, catalytic	6,340 kg/hr (13,978 lb/hr) 232°C (450°F) 0.1 MPa (12.3 psia)	6,081 kg/hr (13,407 lb/hr) 232°C (450°F) 0.1 MPa (12.3 psia)	5,879 kg/hr (12,961 lb/hr) 232°C (450°F) 0.1 MPa (12.3 psia)	9,424 kg/hr (20,776 lb/hr) 232°C (450°F) 0.1 MPa (12.3 psia)	1 (0)
8	Tail Gas Recycle Compressor	Centrifugal	3,053 kg/hr (6,730 lb/hr)	2,497 kg/hr (5,506 lb/hr)	2,052 kg/hr (4,524 lb/hr)	5,537 kg/hr (12,206 lb/hr)	1 (0)

ACCOUNT 5B CO_2 COMPRESSION

Equipment No.	Description	Type	Design Condition				Opr Qty. (Spares)
			D2A	D2B	D2C	D2D	
1	CO_2 Compressor	Integrally geared, multi-stage centrifugal	303 m^3/min @ 15.3 MPa (10,700 scfm @ 2,215 psia)	544 m^3/min @ 15.3 MPa (19,200 scfm @ 2,215 psia)	736 m^3/min @ 15.3 MPa (26,000 scfm @ 2,215 psia)	929 m^3/min @ 15.3 MPa (32,800 scfm @ 2,215 psia)	4 (0)

ACCOUNT 6 COMBUSTION TURBINE AND AUXILIARIES

Equipment No.	Description	Type	Design Condition				Opr Qty. (Spares)
			D2A	D2B	D2C	D2D	
1	Gas Turbine	Advanced F class	230 MW	230 MW	230 MW	230 MW	2 (0)
2	Gas Turbine Generator	TEWAC	260 MVA @ 0.9 p.f., 24 kV, 60 Hz, 3-phase	260 MVA @ 0.9 p.f., 24 kV, 60 Hz, 3-phase	260 MVA @ 0.9 p.f., 24 kV, 60 Hz, 3-phase	260 MVA @ 0.9 p.f., 24 kV, 60 Hz, 3-phase	2 (0)
3	Syngas Expansion Turbine/Generator	Turbo Expander	144,560 kg/h (318,700 lb/h) 5.0 MPa (720 psia) Inlet 3.2 MPa (460 psia) Outlet	117,435 kg/h (258,900 lb/h) 5.0 MPa (730 psia) Inlet 3.2 MPa (460 psia) Outlet	96,207 kg/h (212,100 lb/h) 5.0 MPa (720 psia) Inlet 3.2 MPa (460 psia) Outlet	73,663 kg/h (162,400 lb/h) 5.0 MPa (730 psia) Inlet 3.2 MPa (460 psia) Outlet	2 (0)

ACCOUNT 7 HRSG, DUCTING, AND STACK

Equipment No.	Description	Type	Design Condition				Opr Qty. (Spares)
			D2A	D2B	D2C	D2D	
1	Stack	CS plate, type 409SS liner	76 m (250 ft) high x 8.4 m (28 ft) diameter	76 m (250 ft) high x 8.4 m (28 ft) diameter	76 m (250 ft) high x 8.4 m (28 ft) diameter	76 m (250 ft) high x 8.4 m (28 ft) diameter	1 (0)
2	Heat Recovery Steam Generator	Drum, multi-pressure with economizer section and integral deaerator	Main steam - 346,953 kg/hr, 12.4 MPa/554°C (764,901 lb/hr, 1,800 psig/1,029°F) Reheat steam - 346,475 kg/hr, 3.1 MPa/554°C (763,846 lb/hr, 452 psig/1,029°F)	Main steam - 345,876 kg/hr, 12.4 MPa/548°C (762,527 lb/hr, 1,800 psig/1,019°F) Reheat steam - 342,768 kg/hr, 3.1 MPa/548°C (755,673 lb/hr, 452 psig/1,019°F)	Main steam - 342,439 kg/hr, 12.4 MPa/544°C (754,948 lb/hr, 1,800 psig/1,011°F) Reheat steam - 346,896 kg/hr, 3.1 MPa/544°C (764,776 lb/hr, 452 psig/1,011°F)	Main steam - 338,862 kg/hr, 12.4 MPa/539°C (747,063 lb/hr, 1,800 psig/1,002°F) Reheat steam - 350,486 kg/hr, 3.1 MPa/539°C (772,688 lb/hr, 452 psig/1,002°F)	2 (0)

ACCOUNT 8 STEAM TURBINE GENERATOR AND AUXILIARIES

Equipment No.	Description	Type	Design Condition				Opr Qty. (Spares)
			D2A	D2B	D2C	D2D	
1	Steam Turbine	Commercially available advanced steam turbine	295 MW 12.4 MPa/554°C/554°C (1,800 psig/ 1029°F/1029°F)	292 MW 12.4 MPa/548°C/548°C (1,800 psig/ 1019°F/1019°F)	290 MW 12.4 MPa/544°C/544°C (1,800 psig/ 1011°F/1011°F)	286 MW 12.4 MPa/539°C/539°C (1,800 psig/ 1002°F/1002°F)	1 (0)
2	Steam Turbine Generator	Hydrogen cooled, static excitation	330 MVA @ 0.9 p.f., 24 kV, 60 Hz, 3-phase	320 MVA @ 0.9 p.f., 24 kV, 60 Hz, 3-phase	320 MVA @ 0.9 p.f., 24 kV, 60 Hz, 3-phase	320 MVA @ 0.9 p.f., 24 kV, 60 Hz, 3-phase	1 (0)
3	Steam Bypass	One per HRSG	50% steam flow @ design steam conditions	50% steam flow @ design steam conditions	50% steam flow @ design steam conditions	50% steam flow @ design steam conditions	2 (0)
4	Surface Condenser	Single pass, divided waterbox including vacuum pumps	1,783 GJ/hr (1,690 MMBtu/hr), Inlet water temperature 16°C (60°F), Water temperature rise 11°C (20°F)	1,772 GJ/hr (1,680 MMBtu/hr), Inlet water temperature 16°C (60°F), Water temperature rise 11°C (20°F)	1,751 GJ/hr (1,660 MMBtu/hr), Inlet water temperature 16°C (60°F), Water temperature rise 11°C (20°F)	1,720 GJ/hr (1,630 MMBtu/hr), Inlet water temperature 16°C (60°F), Water temperature rise 11°C (20°F)	1 (0)

ACCOUNT 9 COOLING WATER SYSTEM

Equipment No.	Description	Type	Design Condition				Opr Qty. (Spares)
			D2A	D2B	D2C	D2D	
1	Circulating Water Pumps	Vertical, wet pit	416,395 lpm @ 30 m (110,000 gpm @ 100 ft)	431,537 lpm @ 30 m (114,000 gpm @ 100 ft)	442,893 lpm @ 30 m (117,000 gpm @ 100 ft)	450,464 lpm @ 30 m (119,000 gpm @ 100 ft)	2 (1)
2	Cooling Tower	Evaporative, mechanical draft, multi-cell	11°C (51.5°F) wet bulb / 16°C (60°F) CWT / 27°C (80°F) HWT / 2,332 GJ/hr (2,210 MMBtu/hr) heat duty	11°C (51.5°F) wet bulb / 16°C (60°F) CWT / 27°C (80°F) HWT / 2,416 GJ/hr (2,290 MMBtu/hr) heat duty	11°C (51.5°F) wet bulb / 16°C (60°F) CWT / 27°C (80°F) HWT / 2,469 GJ/hr (2,340 MMBtu/hr) heat duty	11°C (51.5°F) wet bulb / 16°C (60°F) CWT / 27°C (80°F) HWT / 2,522 GJ/hr (2,390 MMBtu/hr) heat duty	1 (0)

ACCOUNT 10 SLAG RECOVERY AND HANDLING

Equipment No.	Description	Type	Design Condition				Opr Qty. (Spares)
			D2A	D2B	D2C	D2D	
1	Slag Quench Tank	Water bath	242,266 liters (64,000 gal)	246,052 liters (65,000 gal)	249,837 liters (66,000 gal)	249,837 liters (66,000 gal)	2 (0)
2	Slag Crusher	Roll	13 tonne/hr (14 tph)	13 tonne/hr (14 tph)	13 tonne/hr (14 tph)	14 tonne/hr (15 tph)	2 (0)
3	Slag Depressurizer	Lock Hopper	13 tonne/hr (14 tph)	13 tonne/hr (14 tph)	13 tonne/hr (14 tph)	14 tonne/hr (15 tph)	2 (0)
4	Slag Receiving Tank	Horizontal, weir	143,846 liters (38,000 gal)	147,631 liters (39,000 gal)	151,416 liters (40,000 gal)	151,416 liters (40,000 gal)	2 (0)
5	Black Water Overflow Tank	Shop fabricated	64,352 liters (17,000 gal)	68,137 liters (18,000 gal)	68,137 liters (18,000 gal)	68,137 liters (18,000 gal)	2 (0)

Equipment No.	Description	Type	Design Condition				Opr Qty. (Spares)
			D2A	D2B	D2C	D2D	
6	Slag Conveyor	Drag chain	13 tonne/hr (14 tph)	13 tonne/hr (14 tph)	13 tonne/hr (14 tph)	14 tonne/hr (15 tph)	2 (0)
7	Slag Separation Screen	Vibrating	13 tonne/hr (14 tph)	13 tonne/hr (14 tph)	13 tonne/hr (14 tph)	14 tonne/hr (15 tph)	2 (0)
8	Coarse Slag Conveyor	Belt/bucket	13 tonne/hr (14 tph)	13 tonne/hr (14 tph)	13 tonne/hr (14 tph)	14 tonne/hr (15 tph)	2 (0)
9	Fine Ash Settling Tank	Vertical, gravity	208,198 liters (55,000 gal)	208,198 liters (55,000 gal)	211,983 liters (56,000 gal)	215,768 liters (57,000 gal)	2 (0)
10	Fine Ash Recycle Pumps	Horizontal centrifugal	38 lpm @ 14 m H_2O (10 gpm @ 46 ft H_2O)	38 lpm @ 14 m H_2O (10 gpm @ 46 ft H_2O)	38 lpm @ 14 m H_2O (10 gpm @ 46 ft H_2O)	38 lpm @ 14 m H_2O (10 gpm @ 46 ft H_2O)	2 (2)
11	Grey Water Storage Tank	Field erected	64,352 liters (17,000 gal)	68,137 liters (18,000 gal)	68,137 liters (18,000 gal)	68,137 liters (18,000 gal)	2 (0)
12	Grey Water Pumps	Centrifugal	227 lpm @ 564 m H_2O (60 gpm @ 1,850 ft H_2O)	227 lpm @ 564 m H_2O (60 gpm @ 1,850 ft H_2O)	227 lpm @ 564 m H_2O (60 gpm @ 1,850 ft H_2O)	227 lpm @ 564 m H_2O (60 gpm @ 1,850 ft H_2O)	2 (2)
13	Slag Storage Bin	Vertical, field erected	907 tonne (1,000 tons)	907 tonne (1,000 tons)	907 tonne (1,000 tons)	907 tonne (1,000 tons)	2 (0)
14	Unloading Equipment	Telescoping chute	109 tonne/hr (120 tph)	109 tonne/hr (120 tph)	109 tonne/hr (120 tph)	109 tonne/hr (120 tph)	1 (0)

ACCOUNT 11 ACCESSORY ELECTRIC PLANT

Equipment No.	Description	Type	Design Condition				Opr Qty. (Spares)
			D2A	D2B	D2C	D2D	
1	CTG Step-up Transformer	Oil-filled	24 kV/345 kV, 260 MVA, 3-ph, 60 Hz	24 kV/345 kV, 260 MVA, 3-ph, 60 Hz	24 kV/345 kV, 260 MVA, 3-ph, 60 Hz	24 kV/345 kV, 260 MVA, 3-ph, 60 Hz	2 (0)
2	STG Step-up Transformer	Oil-filled	24 kV/345 kV, 330 MVA, 3-ph, 60 Hz	24 kV/345 kV, 320 MVA, 3-ph, 60 Hz	24 kV/345 kV, 320 MVA, 3-ph, 60 Hz	24 kV/345 kV, 320 MVA, 3-ph, 60 Hz	1 (0)
3	High Voltage Auxiliary Transformer	Oil-filled	345 kV/13.8 kV, 63 MVA, 3-ph, 60 Hz	345 kV/13.8 kV, 68 MVA, 3-ph, 60 Hz	345 kV/13.8 kV, 72 MVA, 3-ph, 60 Hz	345 kV/13.8 kV, 76 MVA, 3-ph, 60 Hz	2 (0)
4	Medium Voltage Auxiliary Transformer	Oil-filled	24 kV/4.16 kV, 30 MVA, 3-ph, 60 Hz	24 kV/4.16 kV, 34 MVA, 3-ph, 60 Hz	24 kV/4.16 kV, 38 MVA, 3-ph, 60 Hz	24 kV/4.16 kV, 43 MVA, 3-ph, 60 Hz	1 (1)
5	Low Voltage Transformer	Dry ventilated	4.16 kV/480 V, 4 MVA, 3-ph, 60 Hz	4.16 kV/480 V, 5 MVA, 3-ph, 60 Hz	4.16 kV/480 V, 6 MVA, 3-ph, 60 Hz	4.16 kV/480 V, 6 MVA, 3-ph, 60 Hz	1 (1)
6	CTG Isolated Phase Bus Duct and Tap Bus	Aluminum, self-cooled	24 kV, 3-ph, 60 Hz	24 kV, 3-ph, 60 Hz	24 kV, 3-ph, 60 Hz	24 kV, 3-ph, 60 Hz	2 (0)
7	STG Isolated Phase Bus Duct and Tap Bus	Aluminum, self-cooled	24 kV, 3-ph, 60 Hz	24 kV, 3-ph, 60 Hz	24 kV, 3-ph, 60 Hz	24 kV, 3-ph, 60 Hz	1 (0)
8	Medium Voltage Switchgear	Metal clad	4.16 kV, 3-ph, 60 Hz	4.16 kV, 3-ph, 60 Hz	4.16 kV, 3-ph, 60 Hz	4.16 kV, 3-ph, 60 Hz	1 (1)
9	Low Voltage Switchgear	Metal enclosed	480 V, 3-ph, 60 Hz	480 V, 3-ph, 60 Hz	480 V, 3-ph, 60 Hz	480 V, 3-ph, 60 Hz	1 (1)
10	Emergency Diesel Generator	Sized for emergency shutdown	750 kW, 480 V, 3-ph, 60 Hz	750 kW, 480 V, 3-ph, 60 Hz	750 kW, 480 V, 3-ph, 60 Hz	750 kW, 480 V, 3-ph, 60 Hz	1 (0)

ACCOUNT 12 INSTRUMENTATION AND CONTROL

Equipment No.	Description	Type	Design Condition				Opr Qty. (Spares)
			D2A	D2B	D2C	D2D	
1	DCS - Main Control	Monitor/keyboard; Operator printer (laser color); Engineering printer (laser B&W)	Operator stations/printers and engineering stations/printers	Operator stations/printers and engineering stations/printers	Operator stations/printers and engineering stations/printers	Operator stations/printers and engineering stations/printers	1 (0)
2	DCS - Processor	Microprocessor with redundant input/output	N/A	N/A	N/A	N/A	1 (0)
3	DCS - Data Highway	Fiber optic	Fully redundant, 25% spare	Fully redundant, 25% spare	Fully redundant, 25% spare	Fully redundant, 25% spare	1 (0)

This page intentionally left blank

4.3.3 IGCC Design 3 – Two Water Gas Shift Reactors with Bypass

A process block flow diagram for Case 2 Design 3 (D3) is shown in Exhibit 4-68. D3 represents an IGCC plant with two WGS reactors and a bypass stream (stream 13). This IGCC design uses a S:DG molar ratio of 0.25 at the outlet of the second WGS reactor. The WGS bypass ratio and the two-stage Selexol™ CO_2 removal efficiency are adjusted to control the total CO_2 capture level. The Selexol™ removal efficiency is altered by varying the solvent circulation rate, which changes the size and cost of the Selexol™ system.

The WGS bypass impacts the degree of CO to CO_2 and COS to H_2S conversion across the WGS reactor. Consequently, the WGS bypass stream is routed through a COS hydolysis unit to ensure that sulfur emissions are below the limit of 0.0128 lb SO_2/MMBtu.

Five levels of total CO_2 removal were modeled for Case 2 D3: 25 percent (D3A), 45 percent (D3B), 60 percent (D3C), 75 percent (D3D), and 85 percent (D3E). The corresponding stream tables are contained in Exhibit 4-69, Exhibit 4-70, Exhibit 4-71, Exhibit 4-72, and Exhibit 4-73, respectively.

Overall performance for Case 2 D3 is summarized in Exhibit 4-74 which includes auxiliary power requirements.

Material and energy balance information, environmental performance and a major equipment list are summarized in Sections 4.3.3.1 and 4.3.3.2.

Exhibit 4-68 Case 2 D3 Process Block Flow Diagram, IGCC with Two WGS Reactors and Bypass

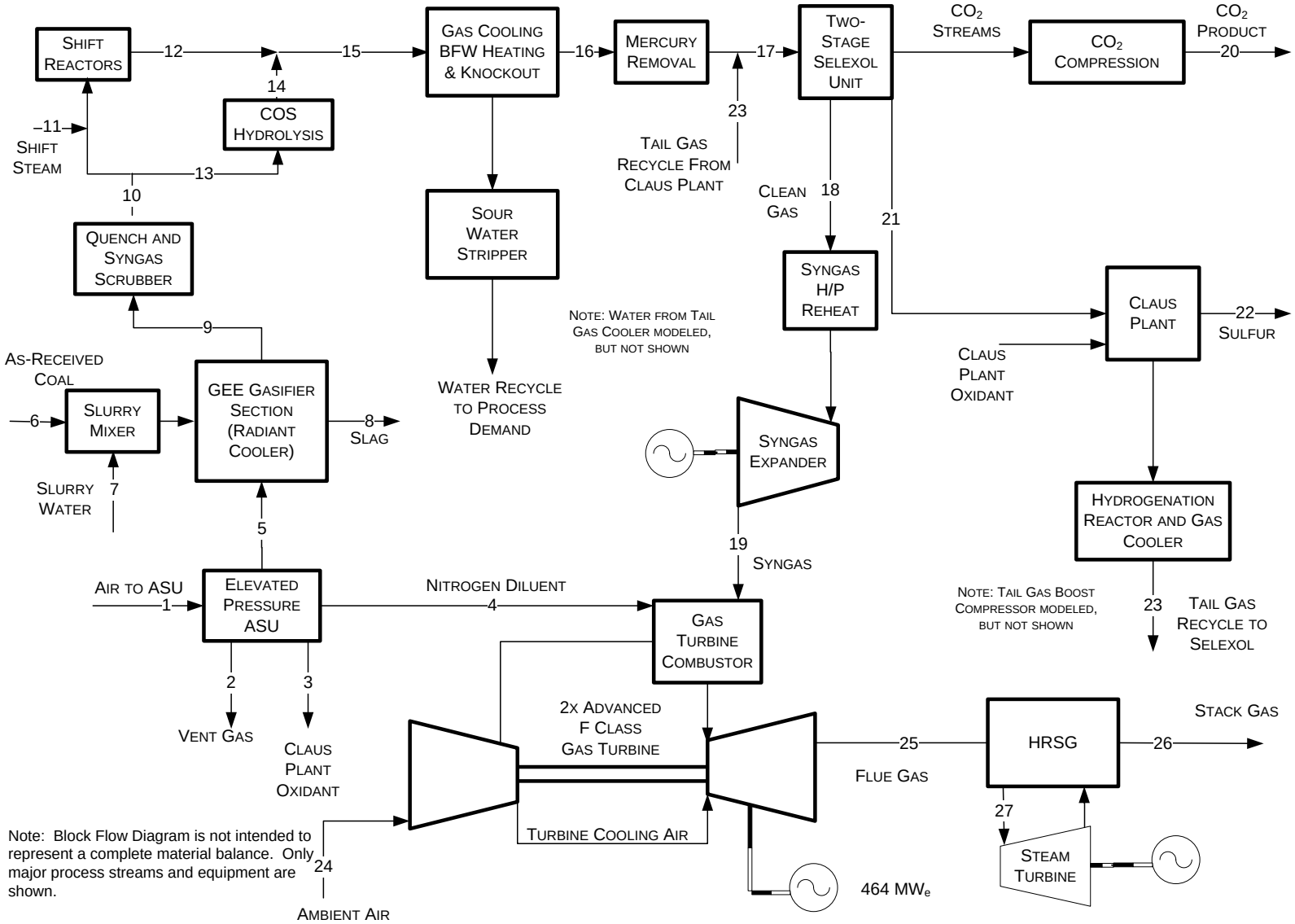

Exhibit 4-69 Case 2 D3A Stream Table, 25% CO_2 Removal with Two WGS Bypass

	1	2	3	4	5	6	7	8	9	10	11	12	13	14
V-L Mole Fraction														
Ar	0.0092	0.0141	0.0318	0.0023	0.0318	0.0000	0.0000	0.0000	0.0086	0.0068	0.0000	0.0068	0.0068	0.0068
CH_4	0.0000	0.0000	0.0000	0.0000	0.0000	0.0000	0.0000	0.0000	0.0011	0.0009	0.0000	0.0009	0.0009	0.0009
CO	0.0000	0.0000	0.0000	0.0000	0.0000	0.0000	0.0000	0.0000	0.3576	0.2820	0.0000	0.0372	0.2820	0.2820
CO_2	0.0003	0.0044	0.0000	0.0000	0.0000	0.0000	0.0000	0.0000	0.1380	0.1088	0.0000	0.3537	0.1088	0.1090
COS	0.0000	0.0000	0.0000	0.0000	0.0000	0.0000	0.0000	0.0000	0.0002	0.0001	0.0000	0.0000	0.0001	0.0000
H_2	0.0000	0.0000	0.0000	0.0000	0.0000	0.0000	0.0000	0.0000	0.3406	0.2686	0.0000	0.5133	0.2686	0.2686
H_2O	0.0099	0.1117	0.0000	0.0003	0.0000	0.0000	0.9995	0.0000	0.1369	0.3197	1.0000	0.0749	0.3197	0.3195
HCl	0.0000	0.0000	0.0000	0.0000	0.0000	0.0000	0.0000	0.0000	0.0008	0.0002	0.0000	0.0002	0.0002	0.0002
H_2S	0.0000	0.0000	0.0000	0.0000	0.0000	0.0000	0.0000	0.0000	0.0073	0.0057	0.0000	0.0058	0.0057	0.0059
N_2	0.7732	0.7576	0.0178	0.9920	0.0178	0.0000	0.0000	0.0000	0.0070	0.0055	0.0000	0.0055	0.0055	0.0055
NH_3	0.0000	0.0000	0.0000	0.0000	0.0000	0.0000	0.0005	0.0000	0.0019	0.0016	0.0000	0.0016	0.0016	0.0016
O_2	0.2074	0.1122	0.9504	0.0054	0.9504	0.0000	0.0000	0.0000	0.0000	0.0000	0.0000	0.0000	0.0000	0.0000
SO_2	0.0000	0.0000	0.0000	0.0000	0.0000	0.0000	0.0000	0.0000	0.0000	0.0000	0.0000	0.0000	0.0000	0.0000
Total	1.0000	1.0000	1.0000	1.0000	1.0000	0.0000	1.0000	0.0000	1.0000	1.0000	1.0000	1.0000	1.0000	1.0000
V-L Flowrate (kg_{mol}/hr)	26,013	1,915	94	18,716	5,251	0	4,787	0	21,972	27,856	0	70	27,786	27,786
V-L Flowrate (kg/hr)	750,670	52,828	3,016	525,175	168,981	0	86,233	0	442,098	547,834	0	1,370	546,465	546,465
Solids Flowrate (kg/hr)	0	0	0	0	0	209,915	0	23,031	0	0	0	0	0	0
Temperature (°C)	15	17	32	93	32	15	142	1,316	677	206	288	266	212	212
Pressure (MPa, abs)	0.10	0.11	0.86	2.65	0.86	0.10	5.79	5.62	5.55	5.52	5.52	5.41	5.48	5.41
Enthalpy (kJ/kg)[A]	30.23	35.15	26.67	92.50	26.67	---	537.77	---	1,424.65	1,067.55	2,918.18	621.54	1,049.09	1,048.99
Density (kg/m^3)	1.2	1.4	11.0	24.4	11.0	---	872.0	---	14.0	27.2	25.6	23.6	27.4	27.0
V-L Molecular Weight	28.857	27.583	32.181	28.060	32.181	---	18.015	---	20.121	19.667	18.015	19.667	19.667	19.667
V-L Flowrate (lb_{mol}/hr)	57,350	4,222	207	41,262	11,576	0	10,553	0	48,440	61,411	0	154	61,257	61,257
V-L Flowrate (lb/hr)	1,654,945	116,465	6,650	1,157,812	372,540	0	190,111	0	974,659	1,207,768	0	3,020	1,204,748	1,204,748
Solids Flowrate (lb/hr)	0	0	0	0	0	462,783	0	50,775	0	0	0	0	0	0
Temperature (°F)	59	63	90	199	90	59	287	2,400	1,250	403	550	510	413	413
Pressure (psia)	14.7	16.4	125.0	384.0	125.0	14.7	840.0	815.0	805.0	800.0	800.0	785.0	795.0	785.0
Enthalpy (Btu/lb)[A]	13.0	15.1	11.5	39.8	11.5	---	231.2	---	612.5	459.0	1,254.6	267.2	451.0	451.0
Density (lb/ft^3)	0.076	0.089	0.687	1.521	0.687	---	54.440	---	0.871	1.699	1.597	1.471	1.710	1.688

A - Reference conditions are 32.02 F & 0.089 PSIA

Exhibit 4-69 Case 2 D3A Stream Table, 25% CO2 Removal with Two WGS Bypass (continued)

	15	16	17	18	19	20	21	22	23	24	25	26	27
V-L Mole Fraction													
Ar	0.0068	0.0100	0.0101	0.0118	0.0118	0.0006	0.0037	0.0000	0.0228	0.0092	0.0091	0.0091	0.0000
CH_4	0.0009	0.0013	0.0013	0.0015	0.0015	0.0002	0.0009	0.0000	0.0000	0.0000	0.0000	0.0000	0.0000
CO	0.2814	0.4138	0.4101	0.4806	0.4806	0.0254	0.1672	0.0000	0.0031	0.0000	0.0000	0.0000	0.0000
CO_2	0.1096	0.1611	0.1618	0.0254	0.0254	0.9652	0.0000	0.0000	0.2378	0.0003	0.0597	0.0597	0.0000
COS	0.0000	0.0000	0.0000	0.0000	0.0000	0.0000	0.0000	0.0000	0.0000	0.0000	0.0000	0.0000	0.0000
H_2	0.2692	0.3959	0.3979	0.4699	0.4699	0.0085	0.1033	0.0000	0.6144	0.0000	0.0000	0.0000	0.0000
H_2O	0.3189	0.0012	0.0012	0.0001	0.0001	0.0000	0.0310	0.0000	0.0013	0.0099	0.0633	0.0633	1.0000
HCl	0.0002	0.0000	0.0000	0.0000	0.0000	0.0000	0.0000	0.0000	0.0000	0.0000	0.0000	0.0000	0.0000
H_2S	0.0059	0.0086	0.0085	0.0000	0.0000	0.0001	0.6924	0.0000	0.0039	0.0000	0.0000	0.0000	0.0000
N_2	0.0055	0.0081	0.0091	0.0108	0.0108	0.0001	0.0016	0.0000	0.1166	0.7732	0.7567	0.7567	0.0000
NH_3	0.0016	0.0000	0.0000	0.0000	0.0000	0.0000	0.0000	0.0000	0.0000	0.0000	0.0000	0.0000	0.0000
O_2	0.0000	0.0000	0.0000	0.0000	0.0000	0.0000	0.0000	0.0000	0.0000	0.2074	0.1112	0.1112	0.0000
SO_2	0.0000	0.0000	0.0000	0.0000	0.0000	0.0000	0.0000	0.0000	0.0000	0.0000	0.0000	0.0000	0.0000
Total	1.0000	1.0000	1.0000	1.0000	1.0000	1.0000	1.0000	0.0000	1.0000	1.0000	1.0000	1.0000	1.0000
V-L Flowrate (kg_{mol}/hr)	27,856	18,942	19,115	16,083	16,083	2,782	235	0	172	110,253	137,409	137,409	35,011
V-L Flowrate (kg/hr)	547,834	387,186	389,967	262,538	262,538	120,297	6,868	0	2,781	3,181,557	3,969,271	3,969,271	630,726
Solids Flowrate (kg/hr)	0	0	0	0	0	0	0	5,253	0	0	0	0	0
Temperature (°C)	206	35	35	35	197	64	48	182	38	15	582	132	554
Pressure (MPa, abs)	5.38	5.14	5.1	4.999	3.172	15.270	0.163	0.119	5.512	0.101	0.105	0.105	12.512
Enthalpy (kJ/kg)[A]	1,037.76	40.00	40.1	54.667	355.129	-108.419	100.144	---	59.854	30.227	733.224	235.966	3,483.940
Density (kg/m^3)	27.2	41.3	40.9	31.5	13.1	482.9	1.8	5,270.3	34.5	1.2	0.4	0.9	35.5
V-L Molecular Weight	19.667	20.440	20	16.324	16.324	43.239	29.253	---	16.127	28.857	28.887	28.887	18.015
V-L Flowrate (lb_{mol}/hr)	61,411	41,760	42,141	35,457	35,457	6,134	518	0	380	243,066	302,935	302,935	77,185
V-L Flowrate (lb/hr)	1,207,768	853,600	859,731	578,797	578,797	265,209	15,141	0	6,131	7,014,133	8,750,744	8,750,744	1,390,513
Solids Flowrate (lb/hr)	0	0	0	0	0	0	0	11,581	0	0	0	0	0
Temperature (°F)	403	95	95	95	387	146	119	360	100	59	1,079	270	1,029
Pressure (psia)	780.0	745.0	740.0	725.0	460.0	2,214.7	23.7	17.3	799.5	14.7	15.2	15.2	1,814.7
Enthalpy (Btu/lb)[A]	446.2	17.2	17.3	23.5	152.7	-46.6	43.1	---	25.7	13.0	315.2	101.4	1,497.8
Density (lb/ft^3)	1.699	2.575	3	1.964	0.817	30.148	0.112	329.017	2.152	0.076	0.027	0.056	2.218

A - Reference conditions are 32.02 F & 0.089 PSIA

Exhibit 4-70 Case 2 D3B Stream Table, 45% CO_2 Capture with Two WGS Bypass

	1	2	3	4	5	6	7	8	9	10	11	12	13	14
V-L Mole Fraction														
Ar	0.0092	0.0147	0.0318	0.0023	0.0318	0.0000	0.0000	0.0000	0.0086	0.0068	0.0000	0.0057	0.0068	0.0068
CH_4	0.0000	0.0000	0.0000	0.0000	0.0000	0.0000	0.0000	0.0000	0.0011	0.0009	0.0000	0.0008	0.0009	0.0009
CO	0.0000	0.0000	0.0000	0.0000	0.0000	0.0000	0.0000	0.0000	0.3576	0.2821	0.0000	0.0082	0.2821	0.2821
CO_2	0.0003	0.0047	0.0000	0.0000	0.0000	0.0000	0.0000	0.0000	0.1380	0.1088	0.0000	0.3199	0.1088	0.1090
COS	0.0000	0.0000	0.0000	0.0000	0.0000	0.0000	0.0000	0.0000	0.0002	0.0001	0.0000	0.0000	0.0001	0.0000
H_2	0.0000	0.0000	0.0000	0.0000	0.0000	0.0000	0.0000	0.0000	0.3406	0.2687	0.0000	0.4539	0.2687	0.2687
H_2O	0.0099	0.1176	0.0000	0.0003	0.0000	0.0000	0.9995	0.0000	0.1369	0.3195	1.0000	0.2004	0.3195	0.3194
HCl	0.0000	0.0000	0.0000	0.0000	0.0000	0.0000	0.0000	0.0000	0.0008	0.0002	0.0000	0.0001	0.0002	0.0002
H_2S	0.0000	0.0000	0.0000	0.0000	0.0000	0.0000	0.0000	0.0000	0.0073	0.0057	0.0000	0.0049	0.0057	0.0059
N_2	0.7732	0.7452	0.0178	0.9920	0.0178	0.0000	0.0000	0.0000	0.0070	0.0055	0.0000	0.0046	0.0055	0.0055
NH_3	0.0000	0.0000	0.0000	0.0000	0.0000	0.0000	0.0005	0.0000	0.0019	0.0016	0.0000	0.0013	0.0016	0.0016
O_2	0.2074	0.1178	0.9504	0.0054	0.9504	0.0000	0.0000	0.0000	0.0000	0.0000	0.0000	0.0000	0.0000	0.0000
SO_2	0.0000	0.0000	0.0000	0.0000	0.0000	0.0000	0.0000	0.0000	0.0000	0.0000	0.0000	0.0000	0.0000	0.0000
Total	1.0000	1.0000	1.0000	1.0000	1.0000	0.0000	1.0000	0.0000	1.0000	1.0000	1.0000	1.0000	1.0000	1.0000
V-L Flowrate (kg_{mol}/hr)	26,413	1,847	96	19,102	5,331	0	4,860	0	22,307	28,275	1,660	10,312	19,623	19,623
V-L Flowrate (kg/hr)	762,207	50,886	3,081	535,999	171,560	0	87,549	0	448,843	556,088	29,897	200,060	385,925	385,925
Solids Flowrate (kg/hr)	0	0	0	0	0	213,118	0	23,383	0	0	0	0	0	0
Temperature (°C)	15	18	32	93	32	15	142	1,316	677	206	288	246	212	212
Pressure (MPa, abs)	0.10	0.11	0.86	2.65	0.86	0.10	5.79	5.62	5.55	5.52	5.52	5.41	5.48	5.41
Enthalpy (kJ/kg)[A]	30.23	35.26	26.67	92.50	26.67	---	537.77	---	1,424.65	1,067.17	2,918.18	878.31	1,048.73	1,048.62
Density (kg/m^3)	1.2	1.4	11.0	24.4	11.0	---	872.0	---	14.0	27.2	25.6	24.5	27.4	27.0
V-L Molecular Weight	28.857	27.557	32.181	28.060	32.181	---	18.015	---	20.121	19.667	18.015	19.401	19.667	19.667
V-L Flowrate (lb_{mol}/hr)	58,231	4,071	211	42,113	11,753	0	10,714	0	49,179	62,335	3,659	22,733	43,261	43,261
V-L Flowrate (lb/hr)	1,680,379	112,185	6,793	1,181,676	378,224	0	193,012	0	989,530	1,225,965	65,912	441,057	850,820	850,820
Solids Flowrate (lb/hr)	0	0	0	0	0	469,844	0	51,550	0	0	0	0	0	0
Temperature (°F)	59	64	90	199	90	59	287	2,400	1,250	403	550	474	413	413
Pressure (psia)	14.7	16.4	125.0	384.0	125.0	14.7	840.0	815.0	805.0	800.0	800.0	785.0	795.0	785.0
Enthalpy (Btu/lb)[A]	13.0	15.2	11.5	39.8	11.5	---	231.2	---	612.5	458.8	1,254.6	377.6	450.9	450.8
Density (lb/ft^3)	0.076	0.090	0.687	1.521	0.687	---	54.440	---	0.871	1.699	1.597	1.529	1.710	1.688

A - Reference conditions are 32.02 F & 0.089 PSIA

Exhibit 4-70 Case 2 D3B Stream Table, 45% CO2 Capture with Two WGS Bypass (continued)

	15	16	17	18	19	20	21	22	23	24	25	26	27
V-L Mole Fraction													
Ar	0.0064	0.0089	0.0090	0.0117	0.0117	0.0003	0.0037	0.0000	0.0254	0.0092	0.0091	0.0091	0.0000
CH_4	0.0008	0.0012	0.0012	0.0015	0.0015	0.0001	0.0009	0.0000	0.0000	0.0000	0.0000	0.0000	0.0000
CO	0.1877	0.2605	0.2586	0.3364	0.3364	0.0101	0.1196	0.0000	0.0022	0.0000	0.0000	0.0000	0.0000
CO_2	0.1817	0.2520	0.2516	0.0330	0.0330	0.9831	0.0000	0.0000	0.1897	0.0003	0.0445	0.0445	0.0000
COS	0.0000	0.0000	0.0000	0.0000	0.0000	0.0000	0.0002	0.0000	0.0000	0.0000	0.0000	0.0000	0.0000
H_2	0.3325	0.4613	0.4627	0.6066	0.6066	0.0062	0.1363	0.0000	0.6477	0.0000	0.0000	0.0000	0.0000
H_2O	0.2784	0.0012	0.0012	0.0001	0.0001	0.0000	0.0356	0.0000	0.0013	0.0099	0.0807	0.0807	1.0000
HCl	0.0002	0.0000	0.0000	0.0000	0.0000	0.0000	0.0000	0.0000	0.0000	0.0000	0.0000	0.0000	0.0000
H_2S	0.0056	0.0076	0.0076	0.0000	0.0000	0.0000	0.7022	0.0000	0.0039	0.0000	0.0000	0.0000	0.0000
N_2	0.0052	0.0072	0.0081	0.0107	0.0107	0.0001	0.0016	0.0000	0.1298	0.7732	0.7559	0.7559	0.0000
NH_3	0.0015	0.0000	0.0000	0.0000	0.0000	0.0000	0.0000	0.0000	0.0000	0.0000	0.0000	0.0000	0.0000
O_2	0.0000	0.0000	0.0000	0.0000	0.0000	0.0000	0.0000	0.0000	0.0000	0.2074	0.1098	0.1098	0.0000
SO_2	0.0000	0.0000	0.0000	0.0000	0.0000	0.0000	0.0000	0.0000	0.0000	0.0000	0.0000	0.0000	0.0000
Total	1.0000	1.0000	1.0000	1.0000	1.0000	1.0000	1.0000	0.0000	1.0000	1.0000	1.0000	1.0000	1.0000
V-L Flowrate (kg_{mol}/hr)	29,934	21,574	21,731	16,471	16,471	5,008	235	0	157	110,253	138,060	138,060	34,991
V-L Flowrate (kg/hr)	585,985	435,306	437,592	212,348	212,348	218,254	6,686	0	2,286	3,181,557	3,929,905	3,929,905	630,373
Solids Flowrate (kg/hr)	0	0	0	0	0	0	0	5,332	0	0	0	0	0
Temperature (°C)	218	35	35	35	197	55	48	182	38	15	576	132	548
Pressure (MPa, abs)	5.38	5.14	5.1	4.999	3.172	15.270	0.163	0.119	5.512	0.101	0.105	0.105	12.512
Enthalpy (kJ/kg)[A]	980.84	39.13	39.3	72.894	451.811	-145.133	110.524	---	69.469	30.227	761.977	266.773	3,469.035
Density (kg/m^3)	26.2	41.0	40.7	24.7	10.3	587.7	1.7	5,270.3	30.8	1.2	0.4	0.9	35.9
V-L Molecular Weight	19.576	20.177	20	12.892	12.892	43.582	28.415	---	14.524	28.857	28.465	28.465	18.015
V-L Flowrate (lb_{mol}/hr)	65,994	47,562	47,909	36,313	36,313	11,041	519	0	347	243,066	304,370	304,370	77,142
V-L Flowrate (lb/hr)	1,291,877	959,686	964,724	468,146	468,146	481,167	14,739	0	5,039	7,014,133	8,663,957	8,663,957	1,389,734
Solids Flowrate (lb/hr)	0	0	0	0	0	0	0	11,754	0	0	0	0	0
Temperature (°F)	425	95	95	95	387	130	119	360	100	59	1,069	270	1,019
Pressure (psia)	780.0	745.0	740.0	725.0	460.0	2,214.7	23.7	17.3	799.5	14.7	15.2	15.2	1,814.7
Enthalpy (Btu/lb)[A]	421.7	16.8	16.9	31.3	194.2	-62.4	47.5	---	29.9	13.0	327.6	114.7	1,491.4
Density (lb/ft^3)	1.637	2.562	3	1.545	0.645	36.688	0.109	329.014	1.925	0.076	0.026	0.055	2.239

A - Reference conditions are 32.02 F & 0.089 PSIA

Exhibit 4-71 Case 2 D3C Stream Table, 60% CO_2 Capture with Two WGS Bypass

	1	2	3	4	5	6	7	8	9	10	11	12	13	14
V-L Mole Fraction														
Ar	0.0092	0.0145	0.0318	0.0023	0.0318	0.0000	0.0000	0.0000	0.0086	0.0068	0.0000	0.0057	0.0068	0.0068
CH_4	0.0000	0.0000	0.0000	0.0000	0.0000	0.0000	0.0000	0.0000	0.0011	0.0009	0.0000	0.0008	0.0009	0.0009
CO	0.0000	0.0000	0.0000	0.0000	0.0000	0.0000	0.0000	0.0000	0.3576	0.2820	0.0000	0.0082	0.2820	0.2820
CO_2	0.0003	0.0046	0.0000	0.0000	0.0000	0.0000	0.0000	0.0000	0.1380	0.1088	0.0000	0.3201	0.1088	0.1089
COS	0.0000	0.0000	0.0000	0.0000	0.0000	0.0000	0.0000	0.0000	0.0002	0.0001	0.0000	0.0000	0.0001	0.0000
H_2	0.0000	0.0000	0.0000	0.0000	0.0000	0.0000	0.0000	0.0000	0.3406	0.2686	0.0000	0.4542	0.2686	0.2686
H_2O	0.0099	0.1159	0.0000	0.0003	0.0000	0.0000	0.9995	0.0000	0.1369	0.3199	1.0000	0.2000	0.3199	0.3197
HCl	0.0000	0.0000	0.0000	0.0000	0.0000	0.0000	0.0000	0.0000	0.0008	0.0002	0.0000	0.0001	0.0002	0.0002
H_2S	0.0000	0.0000	0.0000	0.0000	0.0000	0.0000	0.0000	0.0000	0.0073	0.0057	0.0000	0.0049	0.0057	0.0059
N_2	0.7732	0.7489	0.0178	0.9920	0.0178	0.0000	0.0000	0.0000	0.0070	0.0055	0.0000	0.0046	0.0055	0.0055
NH_3	0.0000	0.0000	0.0000	0.0000	0.0000	0.0000	0.0005	0.0000	0.0019	0.0016	0.0000	0.0013	0.0016	0.0016
O_2	0.2074	0.1162	0.9504	0.0054	0.9504	0.0000	0.0000	0.0000	0.0000	0.0000	0.0000	0.0000	0.0000	0.0000
SO_2	0.0000	0.0000	0.0000	0.0000	0.0000	0.0000	0.0000	0.0000	0.0000	0.0000	0.0000	0.0000	0.0000	0.0000
Total	1.0000	1.0000	1.0000	1.0000	1.0000	0.0000	1.0000	0.0000	1.0000	1.0000	1.0000	1.0000	1.0000	1.0000
V-L Flowrate (kg_{mol}/hr)	26,755	1,898	98	19,321	5,399	0	4,922	0	22,593	28,651	3,003	18,760	12,893	12,893
V-L Flowrate (kg/hr)	772,061	52,330	3,140	542,142	173,759	0	88,671	0	454,598	563,459	54,092	363,995	253,557	253,557
Solids Flowrate (kg/hr)	0	0	0	0	0	215,850	0	23,682	0	0	0	0	0	0
Temperature (°C)	15	18	32	93	32	15	142	1,316	677	206	288	245	212	212
Pressure (MPa, abs)	0.10	0.11	0.86	2.65	0.86	0.10	5.79	5.62	5.55	5.52	5.52	5.41	5.48	5.41
Enthalpy (kJ/kg)[A]	30.23	35.23	26.67	92.50	26.67	---	537.77	---	1,424.65	1,068.03	2,918.18	877.14	1,049.56	1,049.45
Density (kg/m^3)	1.2	1.4	11.0	24.4	11.0	---	872.0	---	14.0	27.2	25.6	24.5	27.4	27.0
V-L Molecular Weight	28.857	27.565	32.181	28.060	32.181	---	18.015	---	20.121	19.667	18.015	19.402	19.667	19.667
V-L Flowrate (lb_{mol}/hr)	58,984	4,185	215	42,596	11,904	0	10,851	0	49,809	63,164	6,620	41,360	28,424	28,424
V-L Flowrate (lb/hr)	1,702,103	115,369	6,922	1,195,219	383,073	0	195,486	0	1,002,216	1,242,215	119,253	802,471	558,997	558,997
Solids Flowrate (lb/hr)	0	0	0	0	0	475,867	0	52,211	0	0	0	0	0	0
Temperature (°F)	59	64	90	199	90	59	287	2,400	1,250	403	550	474	413	413
Pressure (psia)	14.7	16.4	125.0	384.0	125.0	14.7	840.0	815.0	805.0	800.0	800.0	785.0	795.0	785.0
Enthalpy (Btu/lb)[A]	13.0	15.1	11.5	39.8	11.5	---	231.2	---	612.5	459.2	1,254.6	377.1	451.2	451.2
Density (lb/ft^3)	0.076	0.090	0.687	1.521	0.687	---	54.440	---	0.871	1.699	1.597	1.529	1.710	1.688

A - Reference conditions are 32.02 F & 0.089 PSIA

Exhibit 4-71 Case 2 D3C Stream Table, 60% CO2 Capture with Two WGS Bypass (continued)

	15	16	17	18	19	20	21	22	23	24	25	26	27
V-L Mole Fraction													
Ar	0.0061	0.0082	0.0083	0.0116	0.0116	0.0002	0.0037	0.0000	0.0279	0.0092	0.0091	0.0091	0.0000
CH_4	0.0008	0.0011	0.0011	0.0015	0.0015	0.0001	0.0009	0.0000	0.0000	0.0000	0.0000	0.0000	0.0000
CO	0.1197	0.1595	0.1585	0.2214	0.2214	0.0050	0.0804	0.0000	0.0015	0.0000	0.0000	0.0000	0.0000
CO_2	0.2341	0.3119	0.3109	0.0436	0.0436	0.9890	0.0000	0.0000	0.1431	0.0003	0.0327	0.0327	0.0000
COS	0.0000	0.0000	0.0000	0.0000	0.0000	0.0000	0.0003	0.0000	0.0000	0.0000	0.0000	0.0000	0.0000
H_2	0.3786	0.5044	0.5055	0.7114	0.7114	0.0055	0.1634	0.0000	0.6794	0.0000	0.0000	0.0000	0.0000
H_2O	0.2488	0.0012	0.0012	0.0001	0.0001	0.0000	0.0394	0.0000	0.0013	0.0099	0.0949	0.0949	1.0000
HCl	0.0002	0.0000	0.0000	0.0000	0.0000	0.0000	0.0000	0.0000	0.0000	0.0000	0.0000	0.0000	0.0000
H_2S	0.0053	0.0070	0.0070	0.0000	0.0000	0.0000	0.7102	0.0000	0.0043	0.0000	0.0000	0.0000	0.0000
N_2	0.0050	0.0067	0.0075	0.0106	0.0106	0.0000	0.0016	0.0000	0.1426	0.7732	0.7547	0.7547	0.0000
NH_3	0.0014	0.0000	0.0000	0.0000	0.0000	0.0000	0.0000	0.0000	0.0000	0.0000	0.0000	0.0000	0.0000
O_2	0.0000	0.0000	0.0000	0.0000	0.0000	0.0000	0.0000	0.0000	0.0000	0.2074	0.1086	0.1086	0.0000
SO_2	0.0000	0.0000	0.0000	0.0000	0.0000	0.0000	0.0000	0.0000	0.0000	0.0000	0.0000	0.0000	0.0000
Total	1.0000	1.0000	1.0000	1.0000	1.0000	1.0000	1.0000	0.0000	1.0000	1.0000	1.0000	1.0000	1.0000
V-L Flowrate (kg_{mol}/hr)	31,653	23,756	23,901	16,877	16,877	6,770	236	0	145	110,253	138,580	138,580	34,720
V-L Flowrate (kg/hr)	617,551	475,219	477,104	174,441	174,441	295,786	6,538	0	1,884	3,181,557	3,898,141	3,898,141	625,490
Solids Flowrate (kg/hr)	0	0	0	0	0	0	0	5,399	0	0	0	0	0
Temperature (°C)	227	35	35	35	197	53	48	182	38	15	572	132	544
Pressure (MPa, abs)	5.38	5.14	5.1	4.999	3.172	15.270	0.163	0.119	5.512	0.101	0.105	0.105	12.512
Enthalpy (kJ/kg)[A]	938.62	38.42	38.6	93.689	566.535	-154.509	119.522	---	80.508	30.227	786.493	292.348	3,457.373
Density (kg/m^3)	25.6	40.9	40.6	19.8	8.3	616.8	1.7	5,270.3	27.4	1.2	0.4	0.9	36.1
V-L Molecular Weight	19.510	20.004	20	10.336	10.336	43.693	27.725	---	12.984	28.857	28.129	28.129	18.015
V-L Flowrate (lb_{mol}/hr)	69,783	52,373	52,693	37,207	37,207	14,924	520	0	320	243,066	305,516	305,516	76,544
V-L Flowrate (lb/hr)	1,361,467	1,047,679	1,051,833	384,577	384,577	652,097	14,414	0	4,154	7,014,133	8,593,931	8,593,931	1,378,969
Solids Flowrate (lb/hr)	0	0	0	0	0	0	0	11,902	0	0	0	0	0
Temperature (°F)	441	95	95	95	387	127	119	360	100	59	1,061	270	1,011
Pressure (psia)	780.0	745.0	740.0	725.0	460.0	2,214.7	23.7	17.3	799.5	14.7	15.2	15.2	1,814.7
Enthalpy (Btu/lb)[A]	403.5	16.5	16.6	40.3	243.6	-66.4	51.4	---	34.6	13.0	338.1	125.7	1,486.4
Density (lb/ft^3)	1.596	2.554	3	1.236	0.517	38.506	0.106	329.011	1.711	0.076	0.026	0.055	2.256

A - Reference conditions are 32.02 F & 0.089 PSIA

Exhibit 4-72 Case 2 D3D Stream Table, 75% CO_2 Capture with Two WGS Bypass

	1	2	3	4	5	6	7	8	9	10	11	12	13	14
V-L Mole Fraction														
Ar	0.0092	0.0147	0.0318	0.0023	0.0318	0.0000	0.0000	0.0000	0.0086	0.0068	0.0000	0.0057	0.0068	0.0068
CH_4	0.0000	0.0000	0.0000	0.0000	0.0000	0.0000	0.0000	0.0000	0.0011	0.0009	0.0000	0.0008	0.0009	0.0009
CO	0.0000	0.0000	0.0000	0.0000	0.0000	0.0000	0.0000	0.0000	0.3576	0.2818	0.0000	0.0082	0.2818	0.2818
CO_2	0.0003	0.0047	0.0000	0.0000	0.0000	0.0000	0.0000	0.0000	0.1380	0.1087	0.0000	0.3200	0.1087	0.1089
COS	0.0000	0.0000	0.0000	0.0000	0.0000	0.0000	0.0000	0.0000	0.0002	0.0001	0.0000	0.0000	0.0001	0.0000
H_2	0.0000	0.0000	0.0000	0.0000	0.0000	0.0000	0.0000	0.0000	0.3406	0.2684	0.0000	0.4540	0.2684	0.2684
H_2O	0.0099	0.1173	0.0000	0.0003	0.0000	0.0000	0.9995	0.0000	0.1369	0.3201	1.0000	0.2004	0.3201	0.3200
HCl	0.0000	0.0000	0.0000	0.0000	0.0000	0.0000	0.0000	0.0000	0.0008	0.0002	0.0000	0.0001	0.0002	0.0002
H_2S	0.0000	0.0000	0.0000	0.0000	0.0000	0.0000	0.0000	0.0000	0.0073	0.0057	0.0000	0.0049	0.0057	0.0059
N_2	0.7732	0.7458	0.0178	0.9920	0.0178	0.0000	0.0000	0.0000	0.0070	0.0055	0.0000	0.0046	0.0055	0.0055
NH_3	0.0000	0.0000	0.0000	0.0000	0.0000	0.0000	0.0005	0.0000	0.0019	0.0016	0.0000	0.0013	0.0016	0.0016
O_2	0.2074	0.1175	0.9504	0.0054	0.9504	0.0000	0.0000	0.0000	0.0000	0.0000	0.0000	0.0000	0.0000	0.0000
SO_2	0.0000	0.0000	0.0000	0.0000	0.0000	0.0000	0.0000	0.0000	0.0000	0.0000	0.0000	0.0000	0.0000	0.0000
Total	1.0000	1.0000	1.0000	1.0000	1.0000	0.0000	1.0000	0.0000	1.0000	1.0000	1.0000	1.0000	1.0000	1.0000
V-L Flowrate (kg_{mol}/hr)	27,079	1,898	97	19,579	5,467	0	4,983	0	22,874	29,018	4,371	27,295	6,094	6,094
V-L Flowrate (kg/hr)	781,417	52,303	3,125	549,373	175,918	0	89,773	0	460,245	570,666	78,736	529,562	119,840	119,840
Solids Flowrate (kg/hr)	0	0	0	0	0	218,531	0	23,977	0	0	0	0	0	0
Temperature (°C)	15	18	32	93	32	15	142	1,316	677	206	288	246	212	212
Pressure (MPa, abs)	0.10	0.11	0.86	2.65	0.86	0.10	5.79	5.62	5.55	5.52	5.52	5.41	5.48	5.41
Enthalpy (kJ/kg)[A]	30.23	35.26	26.67	92.50	26.67	---	537.77	---	1,424.65	1,068.75	2,918.18	878.16	1,050.26	1,050.15
Density (kg/m^3)	1.2	1.4	11.0	24.4	11.0	---	872.0	---	14.0	27.2	25.6	24.5	27.4	27.0
V-L Molecular Weight	28.857	27.559	32.181	28.060	32.181	---	18.015	---	20.121	19.666	18.015	19.402	19.666	19.666
V-L Flowrate (lb_{mol}/hr)	59,699	4,184	214	43,164	12,052	0	10,986	0	50,428	63,974	9,635	60,175	13,434	13,434
V-L Flowrate (lb/hr)	1,722,729	115,309	6,889	1,211,160	387,832	0	197,915	0	1,014,666	1,258,103	173,583	1,167,485	264,202	264,202
Solids Flowrate (lb/hr)	0	0	0	0	0	481,779	0	52,859	0	0	0	0	0	0
Temperature (°F)	59	64	90	199	90	59	287	2,400	1,250	403	550	474	413	413
Pressure (psia)	14.7	16.4	125.0	384.0	125.0	14.7	840.0	815.0	805.0	800.0	800.0	785.0	795.0	785.0
Enthalpy (Btu/lb)[A]	13.0	15.2	11.5	39.8	11.5	---	231.2	---	612.5	459.5	1,254.6	377.5	451.5	451.5
Density (lb/ft^3)	0.076	0.090	0.687	1.521	0.687	---	54.440	---	0.871	1.699	1.597	1.529	1.710	1.688

A - Reference conditions are 32.02 F & 0.089 PSIA

Exhibit 4-72 Case 2 D3D Stream Table, 75% CO2 Capture with Two WGS Bypass (continued)

	15	16	17	18	19	20	21	22	23	24	25	26	27
V-L Mole Fraction													
Ar	0.0059	0.0076	0.0077	0.0115	0.0115	0.0002	0.0034	0.0000	0.0251	0.0092	0.0091	0.0091	0.0000
CH_4	0.0008	0.0010	0.0010	0.0015	0.0015	0.0001	0.0008	0.0000	0.0000	0.0000	0.0000	0.0000	0.0000
CO	0.0581	0.0748	0.0744	0.1109	0.1109	0.0020	0.0374	0.0000	0.0022	0.0000	0.0000	0.0000	0.0000
CO_2	0.2814	0.3621	0.3612	0.0525	0.0525	0.9925	0.0915	0.0000	0.2188	0.0003	0.0207	0.0207	0.0000
COS	0.0000	0.0000	0.0000	0.0000	0.0000	0.0000	0.0004	0.0000	0.0000	0.0000	0.0000	0.0000	0.0000
H_2	0.4201	0.5405	0.5410	0.8132	0.8132	0.0051	0.1732	0.0000	0.6180	0.0000	0.0000	0.0000	0.0000
H_2O	0.2222	0.0012	0.0012	0.0001	0.0001	0.0000	0.0393	0.0000	0.0013	0.0099	0.1091	0.1091	1.0000
HCl	0.0002	0.0000	0.0000	0.0000	0.0000	0.0000	0.0000	0.0000	0.0000	0.0000	0.0000	0.0000	0.0000
H_2S	0.0051	0.0065	0.0065	0.0000	0.0000	0.0000	0.6525	0.0000	0.0043	0.0000	0.0000	0.0000	0.0000
N_2	0.0048	0.0062	0.0069	0.0104	0.0104	0.0000	0.0015	0.0000	0.1302	0.7732	0.7536	0.7536	0.0000
NH_3	0.0014	0.0000	0.0000	0.0000	0.0000	0.0000	0.0000	0.0000	0.0000	0.0000	0.0000	0.0000	0.0000
O_2	0.0000	0.0000	0.0000	0.0000	0.0000	0.0000	0.0000	0.0000	0.0000	0.2074	0.1074	0.1074	0.0000
SO_2	0.0000	0.0000	0.0000	0.0000	0.0000	0.0000	0.0000	0.0000	0.0000	0.0000	0.0000	0.0000	0.0000
Total	1.0000	1.0000	1.0000	1.0000	1.0000	1.0000	1.0000	0.0000	1.0000	1.0000	1.0000	1.0000	1.0000
V-L Flowrate (kg_{mol}/hr)	33,389	25,949	26,110	17,262	17,262	8,567	260	0	161	110,253	139,118	139,118	34,438
V-L Flowrate (kg/hr)	649,402	515,316	517,847	135,159	135,159	374,880	7,436	0	2,531	3,181,557	3,866,090	3,866,090	620,418
Solids Flowrate (kg/hr)	0	0	0	0	0	0	0	5,464	0	0	0	0	0
Temperature (°C)	235	35	35	35	198	52	48	182	38	15	567	132	539
Pressure (MPa, abs)	5.38	5.14	5.1	4.999	3.172	15.270	0.163	0.119	5.512	0.101	0.105	0.105	12.512
Enthalpy (kJ/kg)[A]	900.98	37.72	37.8	126.739	751.045	-159.378	116.518	---	62.078	30.227	811.540	318.762	3,445.343
Density (kg/m^3)	25.0	40.8	40.5	15.0	6.3	632.3	1.8	5,270.9	33.6	1.2	0.4	0.9	36.4
V-L Molecular Weight	19.450	19.859	20	7.830	7.830	43.760	28.585	---	15.759	28.857	27.790	27.790	18.015
V-L Flowrate (lb_{mol}/hr)	73,609	57,208	57,562	38,056	38,056	18,886	573	0	354	243,066	306,702	306,702	75,924
V-L Flowrate (lb/hr)	1,431,687	1,136,078	1,141,658	297,976	297,976	826,469	16,393	0	5,580	7,014,133	8,523,270	8,523,270	1,367,787
Solids Flowrate (lb/hr)	0	0	0	0	0	0	0	12,047	0	0	0	0	0
Temperature (°F)	455	95	95	95	388	125	119	360	100	59	1,052	270	1,002
Pressure (psia)	780.0	745.0	740.0	725.0	460.0	2,214.7	23.7	17.3	799.5	14.7	15.2	15.2	1,814.7
Enthalpy (Btu/lb)[A]	387.3	16.2	16.3	54.5	322.9	-68.5	50.1	---	26.7	13.0	348.9	137.0	1,481.2
Density (lb/ft^3)	1.561	2.548	3	0.935	0.391	39.476	0.110	329.053	2.098	0.076	0.026	0.054	2.274

A - Reference conditions are 32.02 F & 0.089 PSIA

Exhibit 4-73 Case 2 D3E Stream Table, 85% CO_2 Capture with Two WGS Bypass

	1	2	3	4	5	6	7	8	9	10	11	12	13	14
V-L Mole Fraction														
Ar	0.0092	0.0147	0.0318	0.0023	0.0318	0.0000	0.0000	0.0000	0.0086	0.0068	0.0000	0.0057	0.0068	0.0068
CH_4	0.0000	0.0000	0.0000	0.0000	0.0000	0.0000	0.0000	0.0000	0.0011	0.0009	0.0000	0.0008	0.0009	0.0009
CO	0.0000	0.0000	0.0000	0.0000	0.0000	0.0000	0.0000	0.0000	0.3576	0.2821	0.0000	0.0082	0.2821	0.2821
CO_2	0.0003	0.0047	0.0000	0.0000	0.0000	0.0000	0.0000	0.0000	0.1380	0.1088	0.0000	0.3202	0.1088	0.1090
COS	0.0000	0.0000	0.0000	0.0000	0.0000	0.0000	0.0000	0.0000	0.0002	0.0001	0.0000	0.0000	0.0001	0.0000
H_2	0.0000	0.0000	0.0000	0.0000	0.0000	0.0000	0.0000	0.0000	0.3406	0.2687	0.0000	0.4544	0.2687	0.2687
H_2O	0.0099	0.1180	0.0000	0.0003	0.0000	0.0000	0.9995	0.0000	0.1369	0.3196	1.0000	0.1997	0.3196	0.3195
HCl	0.0000	0.0000	0.0000	0.0000	0.0000	0.0000	0.0000	0.0000	0.0008	0.0002	0.0000	0.0001	0.0002	0.0002
H_2S	0.0000	0.0000	0.0000	0.0000	0.0000	0.0000	0.0000	0.0000	0.0073	0.0057	0.0000	0.0049	0.0057	0.0059
N_2	0.7732	0.7444	0.0178	0.9920	0.0178	0.0000	0.0000	0.0000	0.0070	0.0055	0.0000	0.0046	0.0055	0.0055
NH_3	0.0000	0.0000	0.0000	0.0000	0.0000	0.0000	0.0005	0.0000	0.0019	0.0016	0.0000	0.0013	0.0016	0.0016
O_2	0.2074	0.1182	0.9504	0.0054	0.9504	0.0000	0.0000	0.0000	0.0000	0.0000	0.0000	0.0000	0.0000	0.0000
SO_2	0.0000	0.0000	0.0000	0.0000	0.0000	0.0000	0.0000	0.0000	0.0000	0.0000	0.0000	0.0000	0.0000	0.0000
Total	1.0000	1.0000	1.0000	1.0000	1.0000	0.0000	1.0000	0.0000	1.0000	1.0000	1.0000	1.0000	1.0000	1.0000
V-L Flowrate (kg_{mol}/hr)	27,303	1,903	97	19,752	5,513	0	5,025	0	23,066	29,240	5,292	33,070	1,462	1,462
V-L Flowrate (kg/hr)	787,883	52,428	3,125	554,227	177,399	0	90,529	0	464,121	575,073	95,335	641,654	28,754	28,754
Solids Flowrate (kg/hr)	0	0	0	0	0	220,372	0	24,179	0	0	0	0	0	0
Temperature (°C)	15	18	32	93	32	15	142	1,316	677	206	288	246	212	212
Pressure (MPa, abs)	0.10	0.11	0.86	2.65	0.86	0.10	5.79	5.62	5.55	5.52	5.52	5.41	5.48	5.41
Enthalpy (kJ/kg)[A]	30.23	35.27	26.67	92.50	26.67	---	537.77	---	1,424.65	1,067.37	2,918.18	876.50	1,048.92	1,048.81
Density (kg/m^3)	1.2	1.4	11.0	24.4	11.0	---	872.0	---	14.0	27.2	25.6	24.5	27.4	27.0
V-L Molecular Weight	28.857	27.556	32.181	28.060	32.181	---	18.015	---	20.121	19.667	18.015	19.403	19.667	19.667
V-L Flowrate (lb_{mol}/hr)	60,193	4,195	214	43,545	12,153	0	11,079	0	50,853	64,464	11,667	72,907	3,223	3,223
V-L Flowrate (lb/hr)	1,736,984	115,584	6,889	1,221,862	391,098	0	199,581	0	1,023,211	1,267,818	210,177	1,414,604	63,391	63,391
Solids Flowrate (lb/hr)	0	0	0	0	0	485,836	0	53,304	0	0	0	0	0	0
Temperature (°F)	59	64	90	199	90	59	287	2,400	1,250	403	550	474	413	413
Pressure (psia)	14.7	16.4	125.0	384.0	125.0	14.7	840.0	815.0	805.0	800.0	800.0	785.0	795.0	785.0
Enthalpy (Btu/lb)[A]	13.0	15.2	11.5	39.8	11.5	---	231.2	---	612.5	458.9	1,254.6	376.8	451.0	450.9
Density (lb/ft^3)	0.076	0.090	0.687	1.521	0.687	---	54.440	---	0.871	1.699	1.597	1.529	1.710	1.688

A - Reference conditions are 32.02 F & 0.089 PSIA

Case 2 D3E Stream Table, 85% CO2 Capture with Two WGS Bypass (continued)

	15	16	17	18	19	20	21	22	23	24	25	26	27
V-L Mole Fraction													
Ar	0.0057	0.0072	0.0073	0.0114	0.0114	0.0002	0.0033	0.0000	0.0236	0.0092	0.0091	0.0091	0.0000
CH_4	0.0008	0.0010	0.0009	0.0015	0.0015	0.0001	0.0008	0.0000	0.0000	0.0000	0.0000	0.0000	0.0000
CO	0.0198	0.0249	0.0248	0.0385	0.0385	0.0006	0.0124	0.0000	0.0026	0.0000	0.0000	0.0000	0.0000
CO_2	0.3113	0.3917	0.3909	0.0584	0.0584	0.9942	0.1451	0.0000	0.2643	0.0003	0.0126	0.0126	0.0000
COS	0.0000	0.0000	0.0000	0.0000	0.0000	0.0000	0.0004	0.0000	0.0000	0.0000	0.0000	0.0000	0.0000
H_2	0.4465	0.5618	0.5619	0.8798	0.8798	0.0049	0.1787	0.0000	0.5803	0.0000	0.0000	0.0000	0.0000
H_2O	0.2048	0.0012	0.0012	0.0001	0.0001	0.0000	0.0392	0.0000	0.0014	0.0099	0.1188	0.1188	1.0000
HCl	0.0001	0.0000	0.0000	0.0000	0.0000	0.0000	0.0000	0.0000	0.0000	0.0000	0.0000	0.0000	0.0000
H_2S	0.0050	0.0062	0.0062	0.0000	0.0000	0.0000	0.6187	0.0000	0.0046	0.0000	0.0000	0.0000	0.0000
N_2	0.0047	0.0059	0.0066	0.0104	0.0104	0.0000	0.0014	0.0000	0.1233	0.7732	0.7529	0.7529	0.0000
NH_3	0.0013	0.0000	0.0000	0.0000	0.0000	0.0000	0.0000	0.0000	0.0000	0.0000	0.0000	0.0000	0.0000
O_2	0.0000	0.0000	0.0000	0.0000	0.0000	0.0000	0.0000	0.0000	0.0000	0.2074	0.1066	0.1066	0.0000
SO_2	0.0000	0.0000	0.0000	0.0000	0.0000	0.0000	0.0000	0.0000	0.0000	0.0000	0.0000	0.0000	0.0000
Total	1.0000	1.0000	1.0000	1.0000	1.0000	1.0000	1.0000	0.0000	1.0000	1.0000	1.0000	1.0000	1.0000
V-L Flowrate (kg_{mol}/hr)	34,532	27,442	27,613	17,527	17,527	9,788	277	0	171	110,253	139,484	139,484	34,252
V-L Flowrate (kg/hr)	670,407	542,625	545,608	108,540	108,540	428,616	8,057	0	2,982	3,181,557	3,844,326	3,844,326	617,053
Solids Flowrate (kg/hr)	0	0	0	0	0	0	0	5,509	0	0	0	0	0
Temperature (°C)	240	35	35	35	198	51	48	182	38	15	564	132	536
Pressure (MPa, abs)	5.38	5.14	5.1	4.999	3.172	15.270	0.163	0.119	5.512	0.101	0.105	0.105	12.512
Enthalpy (kJ/kg)[A]	875.18	37.27	37.4	162.361	952.098	-161.516	114.764	---	53.244	30.227	828.855	336.978	3,437.205
Density (kg/m^3)	24.7	40.8	40.5	11.8	5.0	639.2	1.8	5,271.4	37.5	1.2	0.4	0.9	36.6
V-L Molecular Weight	19.414	19.773	20	6.193	6.193	43.791	29.095	---	17.451	28.857	27.561	27.561	18.015
V-L Flowrate (lb_{mol}/hr)	76,130	60,500	60,877	38,640	38,640	21,578	610	0	377	243,066	307,509	307,509	75,512
V-L Flowrate (lb/hr)	1,477,995	1,196,284	1,202,859	239,291	239,291	944,936	17,762	0	6,575	7,014,133	8,475,287	8,475,287	1,360,368
Solids Flowrate (lb/hr)	0	0	0	0	0	0	0	12,146	0	0	0	0	0
Temperature (°F)	463	95	95	95	388	124	119	360	100	59	1,047	270	997
Pressure (psia)	780.0	745.0	740.0	725.0	460.0	2,214.7	23.7	17.3	799.5	14.7	15.2	15.2	1,814.7
Enthalpy (Btu/lb)[A]	376.3	16.0	16.1	69.8	409.3	-69.4	49.3	---	22.9	13.0	356.3	144.9	1,477.7
Density (lb/ft^3)	1.540	2.545	3	0.739	0.310	39.907	0.112	329.081	2.342	0.076	0.026	0.054	2.287

A - Reference conditions are 32.02 F & 0.089 PSIA

Exhibit 4-74 Case 2 D3 Performance Modeling Results

POWER SUMMARY (Gross Power at Generator Terminals, kWe)	D3A (25%)	D3B (45%)	D3C (60%)	D3D (75%)	D3E (85%)
Gas Turbine Power	464,000	464,000	464,000	464,000	464,000
Sweet Gas Expander Power	5,800	5,900	6,100	6,200	6,300
Steam Turbine Power	280,600	276,300	274,100	271,400	269,500
Total	**750,400**	**746,200**	**744,200**	**741,600**	**739,800**
AUXILIARY LOAD SUMMARY, kWe					
Coal Handling	457	460	463	466	468
Coal Milling	2,159	2,192	2,220	2,247	2,266
Sour Water Recycle Slurry Pump	181	183	185	187	188
Slag Handling	1,106	1,122	1,137	1,151	1,161
Air Separation Unit Auxiliaries	1,000	1,000	1,000	1,000	1,000
Air Separation Unit Main Air Compressor	64,015	64,998	65,839	66,636	67,188
Oxygen Compressor	10,165	10,320	10,398	10,528	10,616
Nitrogen Compressors	31,421	32,122	33,120	34,181	34,905
CO_2 Compressor	8,492	15,038	20,275	25,616	29,261
Boiler Feedwater Pumps	3,968	4,009	4,053	4,096	4,125
Condensate Pump	249	259	264	269	273
Quench Water Pump	513	519	524	529	533
Circulating Water Pump	4,165	4,320	4,428	4,536	4,606
Ground Water Pumps	425	456	480	504	520
Cooling Tower Fans	2,153	2,233	2,290	2,344	2,381
Scrubber Pumps	212	216	218	220	223
Acid Gas Removal	4,858	8,907	12,112	15,425	17,676
Gas Turbine Auxiliaries	1,000	1,000	1,000	1,000	1,000
Steam Turbine Auxiliaries	100	100	100	100	100
Claus Plant/TGTU Auxiliaries	250	250	250	250	250
Claus Plant TG Recycle Compressor	828	758	701	772	819
Miscellaneous Balance of Plant [1]	3,000	3,000	3,000	3,000	3,000
Transformer Losses	2,665	2,691	2,717	2,741	2,757
TOTAL AUXILIARIES, kWe	**143,382**	**156,153**	**166,774**	**177,798**	**185,316**
NET POWER, kWe	**607,018**	**590,047**	**577,426**	**563,802**	**554,484**
Net Plant Efficiency, % (HHV)	38.4%	36.7%	35.5%	34.2%	33.4%
Net Plant Heat Rate, kJ/kWh (Btu/kWh)	9,384 (8,894)	9,801 (9,289)	10,143 (9,614)	10,518 (9,969)	10,784 (10,222)
Condenser Duty, GJ/hr (10^6 Btu/hr)	1,625 (1,540)	1,614 (1,530)	1,593 (1,510)	1,572 (1,490)	1,551 (1,470)
CONSUMABLES					
As-Received Coal Feed, kg/hr (lb/hr)	209,915 (462,783)	213,118 (469,844)	215,850 (475,867)	218,531 (481,779)	220,372 (485,836)
Thermal Input, kW_{th} [2]	1,582,239	1,606,380	1,626,975	1,647,185	1,661,057
Raw Water Withdrawal, m^3/min (gpm)	17.8 (4,695)	19.1 (5,040)	20.1 (5,307)	21.1 (5,569)	21.8 (5,748)
Raw Water Consumption, m^3/min (gpm)	14.1 (3,725)	15.3 (4,034)	16.2 (4,276)	17.1 (4,514)	17.7 (4,677)

Notes: 1. Includes plant control systems, lighting, HVAC, and miscellaneous low voltage loads
2. HHV of As Received Illinois No. 6 coal is 27,135 kJ/kg (11,666 Btu/lb)

4.3.3.1 Environmental Performance for Case 2 D3

The environmental targets for emissions of Hg, NO_x, SO_2, and particulate matter were presented in Section 2.4. A summary of the plant air emissions for Case 2 D3A, D3B, D3C, D3D, and D3E is presented in Exhibit 4-75.

For Case 2 D3, SO_2 emissions are controlled by sulfur capture across the two-stage Selexol™ unit. The clean syngas exiting the AGR unit has a sulfur concentration of about 10 ppmv, resulting in a concentration in the flue gas of less than 2 ppmv. The H_2S-rich regeneration gas produced in Case 2 D3 is fed to a Claus plant, producing elemental sulfur. The Claus plant tail gas is hydrogenated to convert all sulfur species to H_2S and then recycled back to the Selexol™ unit, thereby eliminating the need for a tail gas treatment unit.

NOx emissions are limited by nitrogen dilution of the syngas to 15 ppmvd (as NO_2 @ 15 percent O_2). Ammonia in the syngas is removed with process condensate prior to the low-temperature AGR process, and ultimately incinerated in the Claus plant burner. This also assists in lowering NOx levels.

Particulate discharge to the atmosphere is limited to extremely low values by the use of the syngas quench in addition to the syngas scrubber and the gas washing effect of the AGR absorber. The particulate emissions represent filterable particulate only.

Ninety-five percent of the mercury is captured from the syngas by an activated carbon bed.

For Case 2 D3, varying levels of the CO_2 [25 percent (D3A), 45 percent (D3B), 60 percent (D3C), 75 percent (D3D), and 85 percent (D3E)] in the syngas are captured in the two-stage Selexol™ unit and compressed for sequestration. The carbon balance for Case 2 D3 is shown in Exhibit 4-76. The carbon input to the plant consists of carbon in the air and coal. Carbon in the air is not neglected here since the Aspen model accounts for air components throughout. Carbon leaves the plant as unburned carbon in the slag, as dissolved CO_2 in the wastewater blowdown stream, and as CO_2 in the stack gas, ASU vent gas, and the captured CO_2 product. Carbon in the wastewater blowdown stream is calculated by difference to close the material balance. The carbon capture efficiency is defined as the pounds of carbon in the CO_2 product stream relative to the amount of carbon in the coal, less carbon contained in the slag, represented by the following fraction:

(Carbon in CO_2 Product)/[(Carbon in the Coal)-(Carbon in Slag)] or
72,992/(295,000-5,900)*100=25.2% (D3A)
131,728/(299,501-5,990)*100=44.9% (D3B)
178,210/(303,340-6,067)*100=59.9% (D3C)
225,630/(307,108-6,142)*100=75.0% (D3D)
257,847/(309,695-6,194)*100=85.0% (D3E)

Exhibit 4-77 shows the sulfur balance for Case 2 D3. Sulfur input comes solely from the sulfur in the coal. Sulfur output includes the pounds of sulfur recovered in the Claus plant, dissolved SO_2 in the wastewater blowdown stream, and sulfur emitted in the stack gas. Sulfur in the slag is considered to be negligible, and the sulfur content of the blowdown stream is calculated by

difference to close the material balance. The total sulfur capture is represented by the following fraction:

(Sulfur byproduct/Sulfur in the coal) or
(11,581/11,599)*100 = 99.8% (D3A)
(11,754/11,776)*100 = 99.8% (D3B)
(11,902/11,927)*100 = 99.8% (D3C)
(12,047/12,075)*100 = 99.8% (D3D)
(12,146/12,177)*100 = 99.8% (D3E)

The overall water balances for Case 2 D3A, D3B, D3C, D3D, and D3E are shown in Exhibit 4-78, Exhibit 4-79, Exhibit 4-80, Exhibit 4-81, and Exhibit 4-82, respectively. Raw water is obtained from groundwater (50 percent) and from municipal sources (50 percent). Water demand represents the total amount of water required for a particular process. Some water is recovered within the process and that water is reused as internal recycle. Raw water withdrawal is the difference between water demand and internal recycle. Process water discharged from the power plant is also accounted for in this study. Raw water consumption represents raw water withdrawal less process water discharge.

Heat and Mass Balance Diagrams

Heat and mass balance diagrams are shown for the following subsystems in Exhibit 4-83 through Exhibit 4-97.

- Gasifier and ASU
- Syngas Cleanup
- Power Block

An overall plant energy balance for Case D3A, D3B, D3C, D3D, and D3E is provided in tabular form in Exhibit 4-98, Exhibit 4-99, Exhibit 4-100, Exhibit 4-101, and Exhibit 4-102, respectively. The power out is the combined combustion turbine, steam turbine and expander power after generator losses. In addition, energy balance Sankey diagrams are provided for D3A, D3B, D3C, D3D, and D3E in Exhibit 4-103, Exhibit 4-104, Exhibit 4-105, Exhibit 4-106, and Exhibit 4-107, respectively.

Exhibit 4-75 Case 2 D3 Estimated Air Emission Rates

	kg/GJ ($lb/10^6$ Btu)			Tonne/year (ton/year) 85% capacity factor			kg/MWh (lb/MWh)		
	D3A	D3B	D3C	D3A	D3B	D3C	D3A	D3B	D3C
SO_2	0.001 (0.002)	0.001 (0.002)	0.001 (0.002)	37 (40)	37 (41)	38 (42)	0.007 (0.020)	0.007 (0.020)	0.007 (0.020)
NO_X	0.024 (0.055)	0.023 (0.053)	0.022 (0.052)	947 (1,044)	927 (1,022)	910 (1,003)	0.180 (0.397)	0.177 (0.391)	0.174 (0.385)
PM	0.003 (0.0071)	0.003 (0.0071)	0.003 (0.0071)	122 (134)	124 (136)	125 (138)	0.023 (0.051)	0.024 (0.052)	0.024 (0.053)
Hg	$0.246x10^{-6}$ ($0.571x10^{-6}$)	$0.246x10^{-6}$ ($0.571x10^{-6}$)	$0.246x10^{-6}$ ($0.571x10^{-6}$)	0.010 (0.011)	0.010 (0.011)	0.010 (0.011)	$1.87x10^{-6}$ ($4.11x10^{-6}$)	$1.90x10^{-6}$ ($4.20x10^{-6}$)	$1.93x10^{-6}$ ($4.26x10^{-6}$)
CO_2	63.3 (147.3)	46.8 (108.8)	34.1 (79.2)	2,528,207 (2,786,871)	1,895,466 (2,089,393)	1,397,892 (1,540,913)	481 (1,060)	362 (799)	268 (591)
CO_2 net							594 (1,310)	458 (1,011)	345 (762)

Exhibit 4-75 Case 2 D3 Estimated Air Emission Rates (continued)

	kg/GJ ($lb/10^6$ Btu)		Tonne/year (ton/year) 85% capacity factor		kg/MWh (lb/MWh)	
	D3D	D3E	D3D	D3E	D3D	D3E
SO_2	0.001 (0.002)	0.001 (0.002)	38 (42)	39 (42)	0.007 (0.020)	0.007 (0.020)
NO_X	0.021 (0.050)	0.021 (0.049)	893 (985)	882 (972)	0.172 (0.379)	0.170 (0.375)
PM	0.003 (0.0071)	0.003 (0.0071)	127 (140)	128 (141)	0.024 (0.054)	0.025 (0.054)
Hg	$0.246x10^{-6}$ ($0.571x10^{-6}$)	$0.246x10^{-6}$ ($0.571x10^{-6}$)	0.010 (0.011)	0.010 (0.011)	$1.96x10^{-6}$ ($4.33x10^{-6}$)	$1.99x10^{-6}$ ($4.38x10^{-6}$)
CO_2	21.4 (49.7)	13.0 (30.1)	888,578 (979,489)	542,862 (598,402)	171 (377)	105 (231)
CO_2 net					225 (496)	140 (308)

Exhibit 4-76 Case 2 D3 Carbon Balance

Carbon In, kg/hr (lb/hr)					
	D3A	**D3B**	**D3C**	**D3D**	**D3E**
Coal	133,810 (295,000)	135,851 (299,501)	137,593 (303,340)	139,302 (307,108)	140,475 (309,695)
Air (CO_2)	535 (1,179)	536 (1,182)	538 (1,185)	539 (1,188)	540 (1,190)
Total	**134,345 (296,179)**	**136,387 (300,683)**	**138,131 (304,525)**	**139,841 (308,296)**	**141,015 (310,885)**
Carbon Out, kg/hr (lb/hr)					
Slag	2,676 (5,900)	2,717 (5,990)	2,752 (6,067)	2,786 (6,142)	2,810 (6,194)
Stack Gas	98,457 (217,061)	73,816 (162,737)	54,439 (120,017)	34,604 (76,290)	21,141 (46,608)
ASU Vent	102 (225)	104 (229)	105 (231)	106 (234)	107 (236)
CO_2 Product	33,109 (72,992)	59,751 (131,728)	80,835 (178,210)	102,344 (225,630)	116,957 (257,847)
Convergence Tolerance	1 (1)	-1 (-1)	0 (0)	1 (0)	0 (0)
Total	**134,345 (296,179)**	**136,387 (300,683)**	**138,131 (304,525)**	**139,841 (308,296)**	**141,015 (310,885)**

Exhibit 4-77 Case 2 D3 Sulfur Balance

Sulfur In, kg/hr (lb/hr)					
	D3A	**D3B**	**D3C**	**D3D**	**D3E**
Coal	5,261 (11,599)	5,342 (11,776)	5,410 (11,927)	5,477 (12,075)	5,523 (12,177)
Total	**5,261 (11,599)**	**5,342 (11,776)**	**5,410 (11,927)**	**5,477 (12,075)**	**5,523 (12,177)**
Sulfur Out, kg/hr (lb/hr)					
Elemental Sulfur	5,253 (11,581)	5,332 (11,754)	5,399 (11,902)	5,464 (12,047)	5,509 (12,146)
Stack Gas	3 (6)	3 (6)	3 (6)	3 (6)	3 (6)
CO_2 Product	6 (12)	7 (16)	9 (19)	10 (22)	11 (25)
Convergence Tolerance	-1 (0)	0 (0)	-1 (0)	0 (0)	0 (0)
Total	**5,261 (11,599)**	**5,342 (11,776)**	**5,410 (11,927)**	**5,477 (12,075)**	**5,523 (12,177)**

Exhibit 4-78 Case 2 D3A (25%) Water Balance

Water Use	Water Demand, m^3/min (gpm)	Internal Recycle, m^3/min (gpm)	Raw Water Withdrawal, m^3/min (gpm)	Process Water Discharge, m^3/min (gpm)	Raw Water Consumption, m^3/min (gpm)
Slag Handling	0.50 (132)	0.50 (132)	0.0 (0)	0.0 (0)	0.0 (0)
Quench/Wash	2.7 (719)	0.87 (231)	1.8 (488)	0.0 (0)	1.8 (488)
Humidifier	0.0 (0)	0.0 (0)	0.0 (0)	0.0 (0)	0.0 (0)
SWS Blowdown	0.0 (0)	0.0 (0)	0.0 (0)	0.03 (7)	-0.03 (-7)
Condenser Makeup	**0.2 (55)**	**0.0 (0)**	**0.2 (55)**	**0.0 (0)**	**0.2 (55)**
Gasifier Steam	0.0 (0)	0.0 (0)	0.0 (0)		
Shift Steam	0.0 (0)	0.0 (0)	0.0 (0)		
CT Steam Dilution	0.0 (0)	0.0 (0)	0.0 (0)		
BFW Makeup	0.21 (55)	0.0 (0)	0.21 (55)		
Cooling Tower	**16.2 (4,282)**	**0.49 (129)**	**15.7 (4,152)**	**3.6 (963)**	**12.1 (3,190)**
BFW Blowdown	0.0 (0)	0.21 (55)	-0.21 (-55)		
SWS Blowdown	0.0 (0)	0.28 (74)	-0.28 (-74)		
SWS Excess Water	0.0 (0)	0.0 (0)	0.0 (0)		
Humidifier Tower Blowdown	0.0 (0)	0.0 (0)	0.0 (0)		
Total	**21.1 (5,568)**	**3.30 (872)**	**17.8 (4,695)**	**3.7 (970)**	**14.1 (3,725)**
Total, gal/MWh_{net}	**550**	**86**	**464**	**96**	**368**

Exhibit 4-79 Case 2 D3B (45%) Water Balance

Water Use	Water Demand, m^3/min (gpm)	Internal Recycle, m^3/min (gpm)	Raw Water Withdrawal, m^3/min (gpm)	Process Water Discharge, m^3/min (gpm)	Raw Water Consumption, m^3/min (gpm)
Slag Handling	0.51 (134)	0.51 (134)	0.0 (0)	0.0 (0)	0.0 (0)
Quench/Wash	2.8 (730)	0.72 (191)	2.0 (538)	0.0 (0)	2.0 (538)
Humidifier	0.0 (0)	0.0 (0)	0.0 (0)	0.0 (0)	0.0 (0)
SWS Blowdown	0.0 (0)	0.0 (0)	0.0 (0)	0.03 (7)	-0.03 (-7)
Condenser Makeup	**0.7 (187)**	**0.0 (0)**	**0.7 (187)**	**0.0 (0)**	**0.7 (187)**
Gasifier Steam	0.0 (0)	0.0 (0)	0.0 (0)		
Shift Steam	0.5 (132)	0.0 (0)	0.5 (132)		
CT Steam Dilution	0.0 (0)	0.0 (0)	0.0 (0)		
BFW Makeup	0.21 (55)	0.0 (0)	0.21 (55)		
Cooling Tower	**16.8 (4,441)**	**0.48 (127)**	**16.3 (4,314)**	**3.8 (999)**	**12.6 (3,316)**
BFW Blowdown	0.0 (0)	0.21 (55)	-0.21 (-55)		
SWS Blowdown	0.0 (0)	0.27 (71)	-0.27 (-71)		
SWS Excess Water	0.0 (0)	0.0 (0)	0.0 (0)		
Humidifier Tower Blowdown	0.0 (0)	0.0 (0)	0.0 (0)		
Total	**22.3 (5,878)**	**3.17 (838)**	**19.1 (5,040)**	**3.8 (1,006)**	**15.3 (4,034)**
Total, gal/MWh_{net}	**598**	**85**	**513**	**102**	**410**

Exhibit 4-80 Case 2 D3C (60%) Water Balance

Water Use	Water Demand, m^3/min (gpm)	Internal Recycle, m^3/min (gpm)	Raw Water Withdrawal, m^3/min (gpm)	Process Water Discharge, m^3/min (gpm)	Raw Water Consumption, m^3/min (gpm)
Slag Handling	0.51 (136)	0.51 (136)	0.0 (0)	0.0 (0)	0.0 (0)
Quench/Wash	2.8 (739)	0.60 (157)	2.2 (582)	0.0 (0)	2.2 (582)
Humidifier	0.0 (0)	0.0 (0)	0.0 (0)	0.0 (0)	0.0 (0)
SWS Blowdown	0.0 (0)	0.0 (0)	0.0 (0)	0.03 (7)	-0.03 (-7)
Condenser Makeup	**1.1 (294)**	**0.0 (0)**	**1.1 (294)**	**0.0 (0)**	**1.1 (294)**
Gasifier Steam	0.0 (0)	0.0 (0)	0.0 (0)		
Shift Steam	0.9 (239)	0.0 (0)	0.9 (239)		
CT Steam Dilution	0.0 (0)	0.0 (0)	0.0 (0)		
BFW Makeup	0.21 (55)	0.0 (0)	0.21 (55)		
Cooling Tower	**17.2 (4,555)**	**0.47 (124)**	**16.8 (4,431)**	**3.9 (1,024)**	**12.9 (3,407)**
BFW Blowdown	0.0 (0)	0.21 (55)	-0.21 (-55)		
SWS Blowdown	0.0 (0)	0.26 (68)	-0.26 (-68)		
SWS Excess Water	0.0 (0)	0.0 (0)	0.0 (0)		
Humidifier Tower Blowdown	0.0 (0)	0.0 (0)	0.0 (0)		
Total	**23.1 (6,115)**	**3.06 (808)**	**20.1 (5,307)**	**3.9 (1,031)**	**16.2 (4,276)**
Total, gal/MWh_{net}	**635**	**84**	**551**	**107**	**444**

Exhibit 4-81 Case 2 D3D (75%) Water Balance

Water Use	Water Demand, m^3/min (gpm)	Internal Recycle, m^3/min (gpm)	Raw Water Withdrawal, m^3/min (gpm)	Process Water Discharge, m^3/min (gpm)	Raw Water Consumption, m^3/min (gpm)
Slag Handling	0.52 (137)	0.52 (137)	0.0 (0)	0.0 (0)	0.0 (0)
Quench/Wash	2.8 (748)	0.47 (123)	2.4 (625)	0.0 (0)	2.4 (625)
Humidifier	0.0 (0)	0.0 (0)	0.0 (0)	0.0 (0)	0.0 (0)
SWS Blowdown	0.0 (0)	0.0 (0)	0.0 (0)	0.02 (7)	-0.02 (-7)
Condenser Makeup	**1.5 (402)**	**0.0 (0)**	**1.5 (402)**	**0.0 (0)**	**1.5 (402)**
Gasifier Steam	0.0 (0)	0.0 (0)	0.0 (0)		
Shift Steam	1.3 (347)	0.0 (0)	1.3 (347)		
CT Steam Dilution	0.0 (0)	0.0 (0)	0.0 (0)		
BFW Makeup	0.21 (55)	0.0 (0)	0.21 (55)		
Cooling Tower	**17.7 (4,663)**	**0.46 (121)**	**17.2 (4,542)**	**4.0 (1,049)**	**13.2 (3,494)**
BFW Blowdown	0.0 (0)	0.21 (55)	-0.21 (-55)		
SWS Blowdown	0.0 (0)	0.25 (66)	-0.25 (-66)		
SWS Excess Water	0.0 (0)	0.0 (0)	0.0 (0)		
Humidifier Tower Blowdown	0.0 (0)	0.0 (0)	0.0 (0)		
Total	**24.0 (6,347)**	**2.94 (777)**	**21.1 (5,569)**	**4.0 (1,055)**	**17.1 (4,514)**
Total, gal/MWh_{net}	**675**	**83**	**593**	**112**	**480**

Exhibit 4-82 Case 2 D3E (85%) Water Balance

Water Use	Water Demand, m^3/min (gpm)	Internal Recycle, m^3/min (gpm)	Raw Water Withdrawal, m^3/min (gpm)	Process Water Discharge, m^3/min (gpm)	Raw Water Consumption, m^3/min (gpm)
Slag Handling	0.52 (138)	0.52 (138)	0.0 (0)	0.0 (0)	0.0 (0)
Quench/Wash	2.9 (755)	0.38 (99)	2.5 (655)	0.0 (0)	2.5 (655)
Humidifier	0.0 (0)	0.0 (0)	0.0 (0)	0.0 (0)	0.0 (0)
SWS Blowdown	0.0 (0)	0.0 (0)	0.0 (0)	0.02 (6)	-0.02 (-6)
Condenser Makeup	**1.8 (475)**	**0.0 (0)**	**1.8 (475)**	**0.0 (0)**	**1.8 (475)**
Gasifier Steam	0.0 (0)	0.0 (0)	0.0 (0)		
Shift Steam	1.6 (420)	0.0 (0)	1.6 (420)		
CT Steam Dilution	0.0 (0)	0.0 (0)	0.0 (0)		
BFW Makeup	0.21 (55)	0.0 (0)	0.21 (55)		
Cooling Tower	**17.9 (4,736)**	**0.45 (119)**	**17.5 (4,618)**	**4.0 (1,065)**	**13.4 (3,553)**
BFW Blowdown	0.0 (0)	0.21 (55)	-0.21 (-55)		
SWS Blowdown	0.0 (0)	0.24 (64)	-0.24 (-64)		
SWS Excess Water	0.0 (0)	0.0 (0)	0.0 (0)		
Humidifier Tower Blowdown	0.0 (0)	0.0 (0)	0.0 (0)		
Total	**24.6 (6,504)**	**2.86 (756)**	**21.8 (5,748)**	**4.1 (1,072)**	**17.7 (4,677)**
Total, gal/MWh_{net}	**704**	**82**	**622**	**116**	**506**

Exhibit 4-83 Case 2 D3A (25%) Heat and Mass Balance, GEE Gasifier and ASU

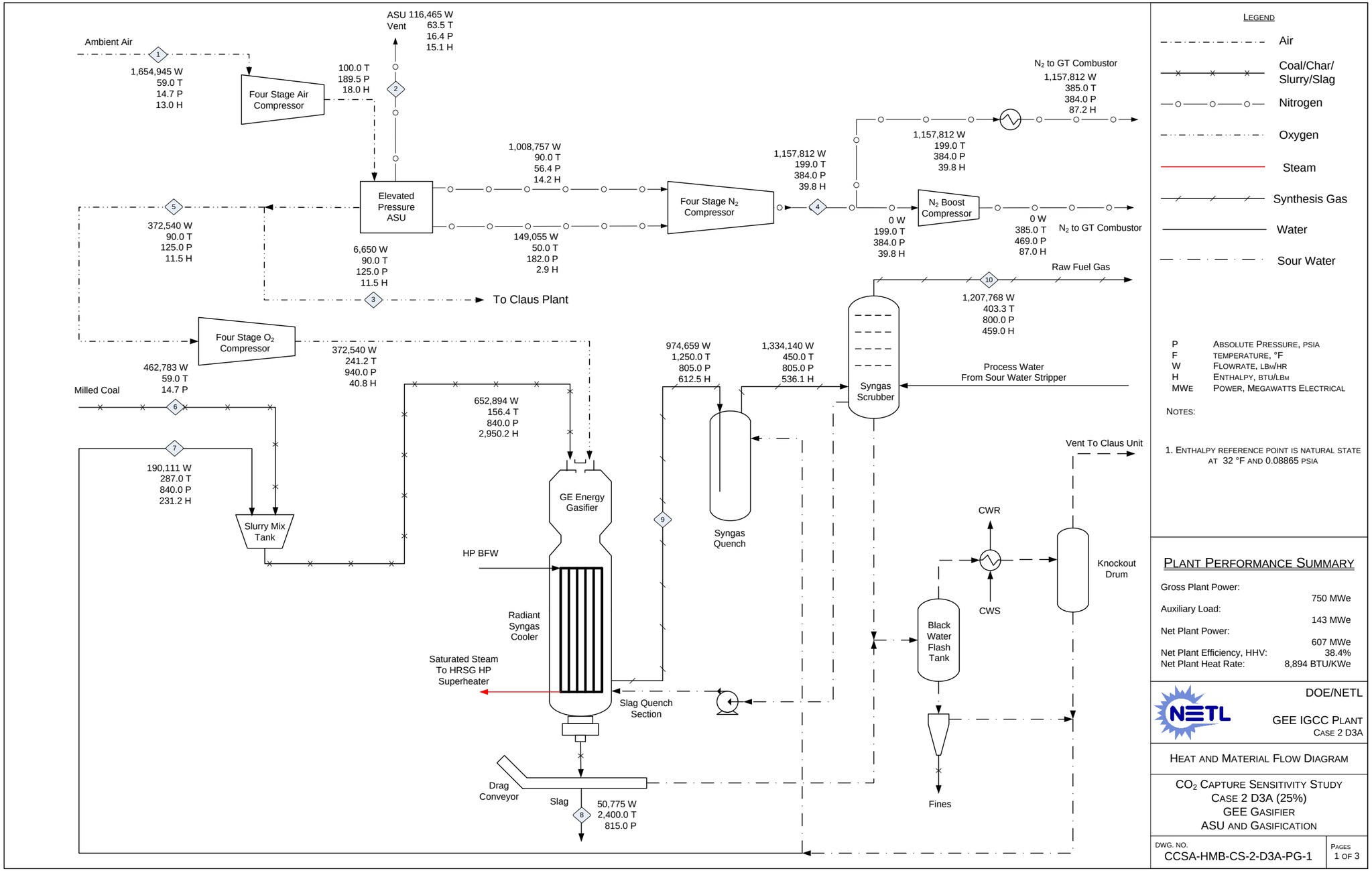

Exhibit 4-84 Case 2 D3A (25%) Heat and Mass Balance, Syngas Cleanup

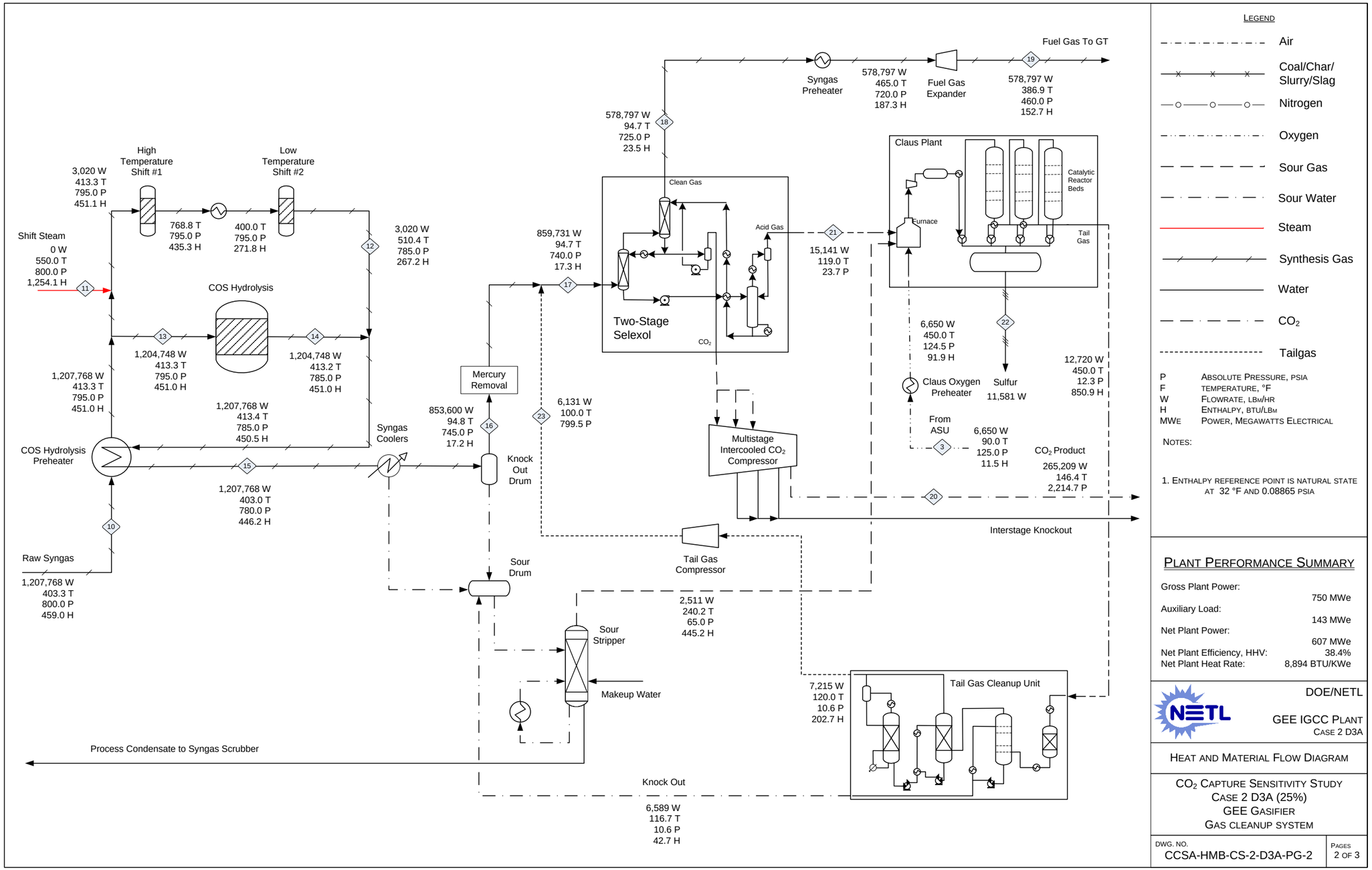

Exhibit 4-85 Case 2 D3A (25%) Heat and Mass Balance, Power Block

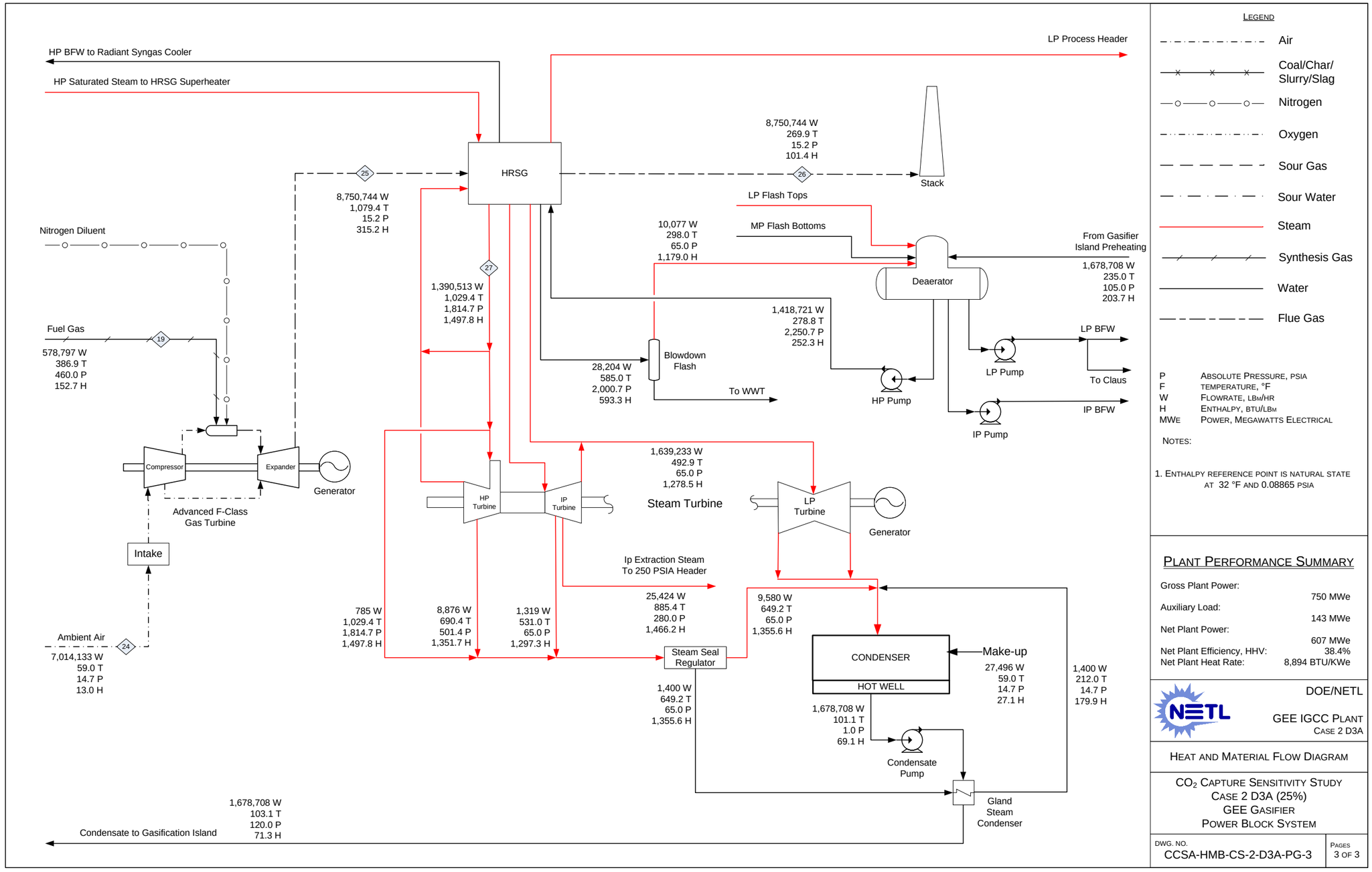

Exhibit 4-86 Case 2 D3B (45%) Heat and Mass Balance, GEE Gasifier and ASU

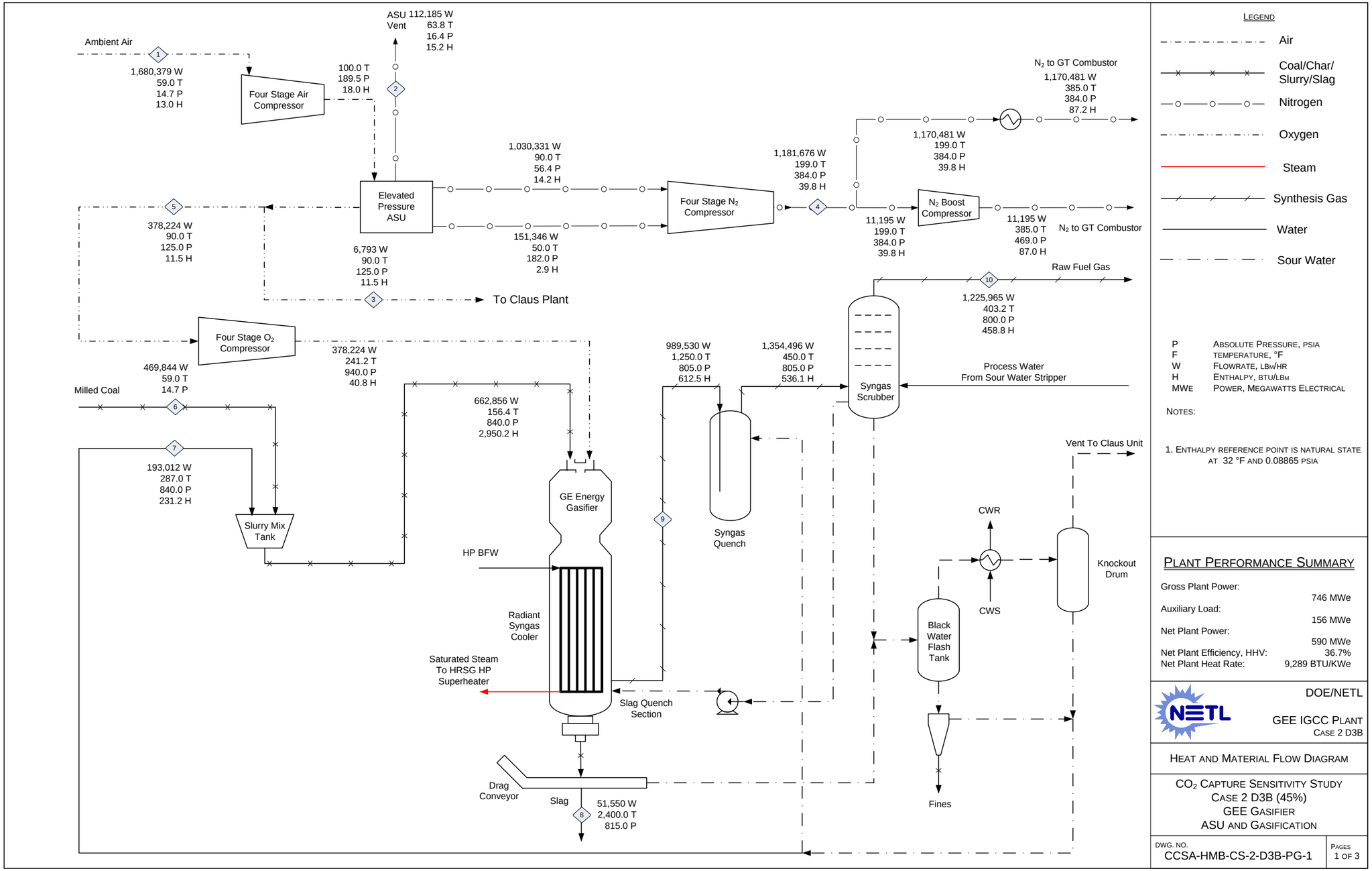

Exhibit 4-87 Case 2 D3B (45%) Heat and Mass Balance, Syngas Cleanup

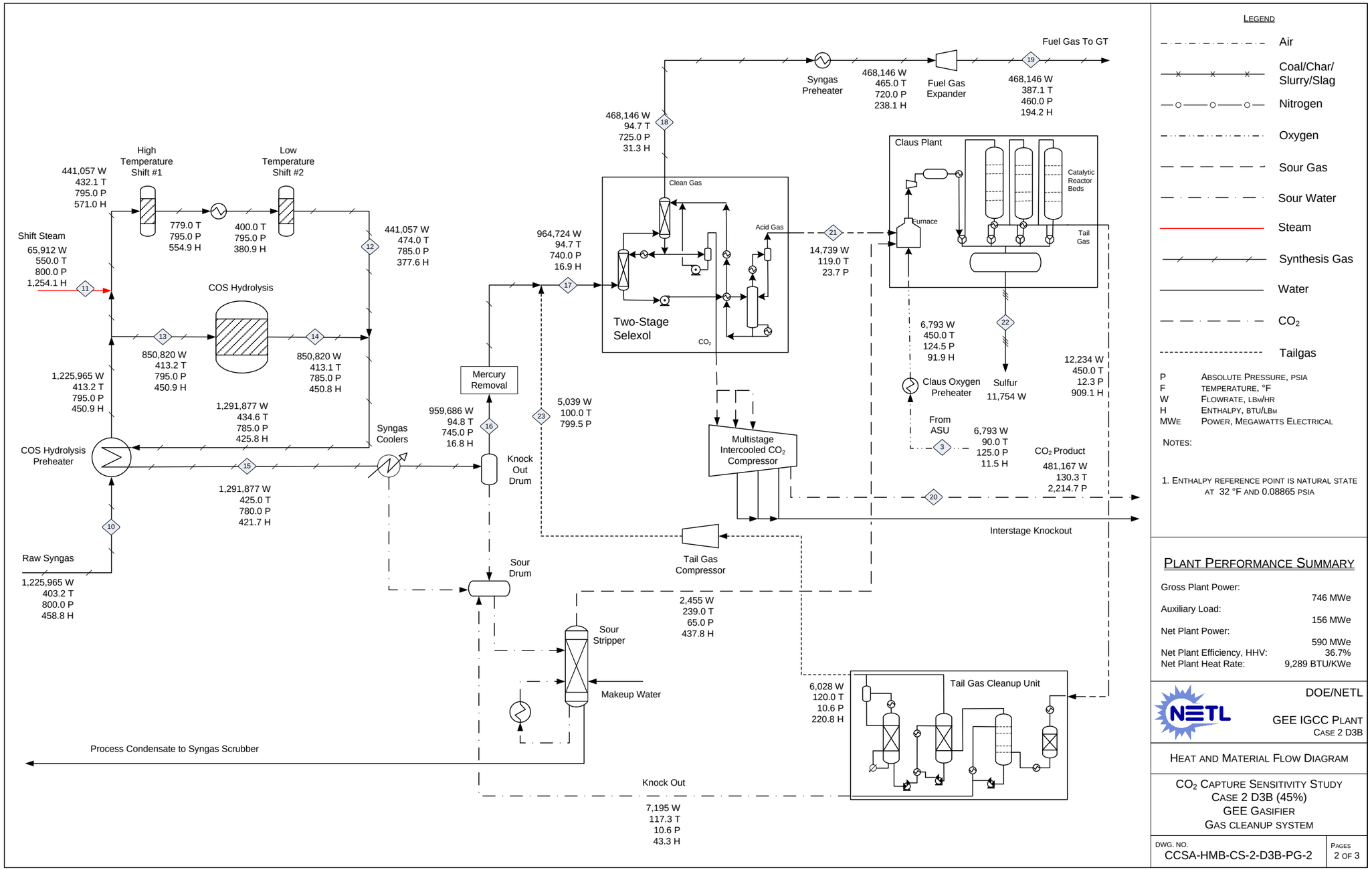

Exhibit 4-88 Case 2 D3B (45%) Heat and Mass Balance, Power Block

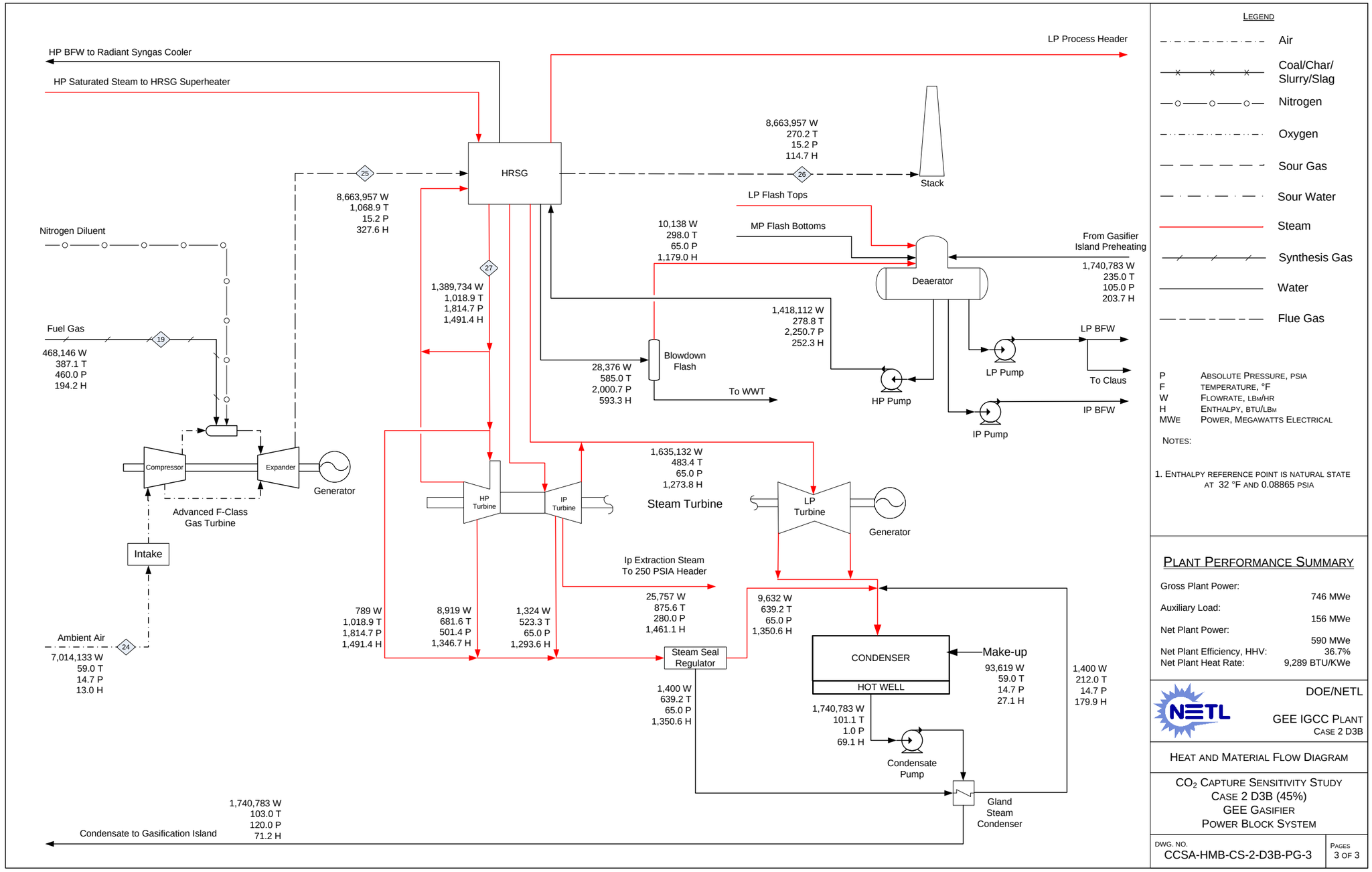

Exhibit 4-89 Case 2 D3C (60%) Heat and Mass Balance, GEE Gasifier and ASU

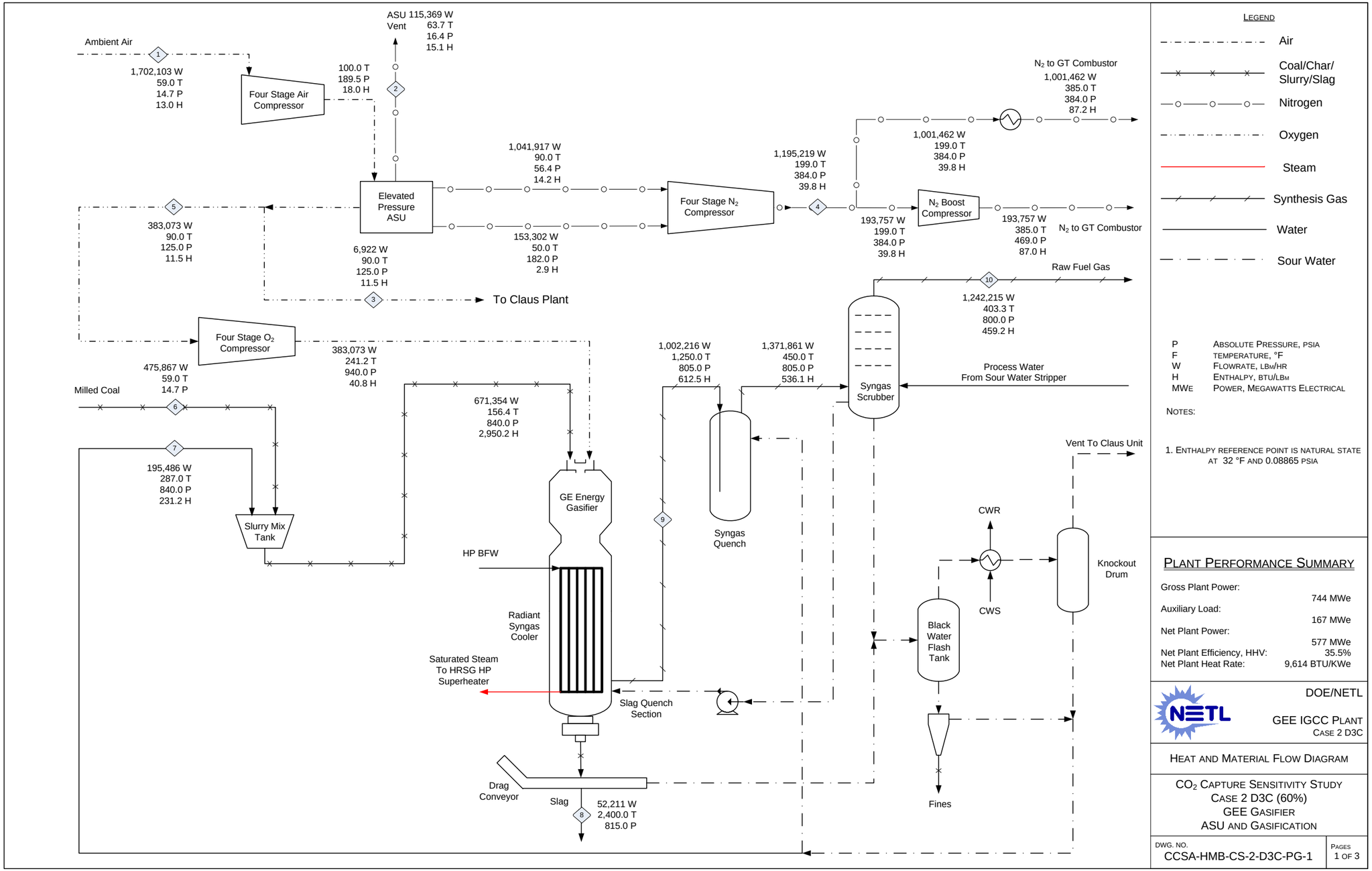

Exhibit 4-90 Case 2 D3C (60%) Heat and Mass Balance, Syngas Cleanup

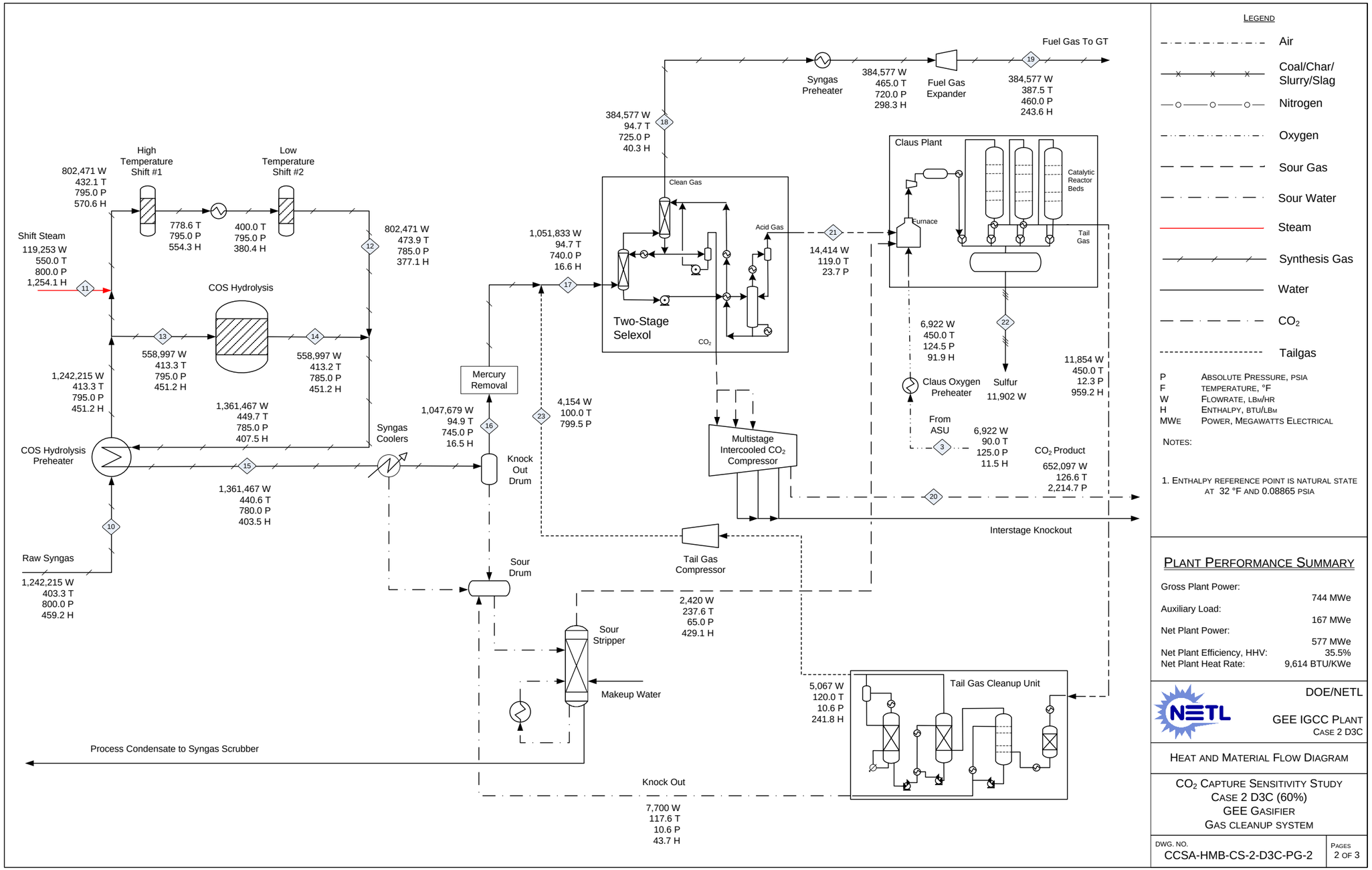

Exhibit 4-91 Case 2 D3C (60%) Heat and Mass Balance, Power Block

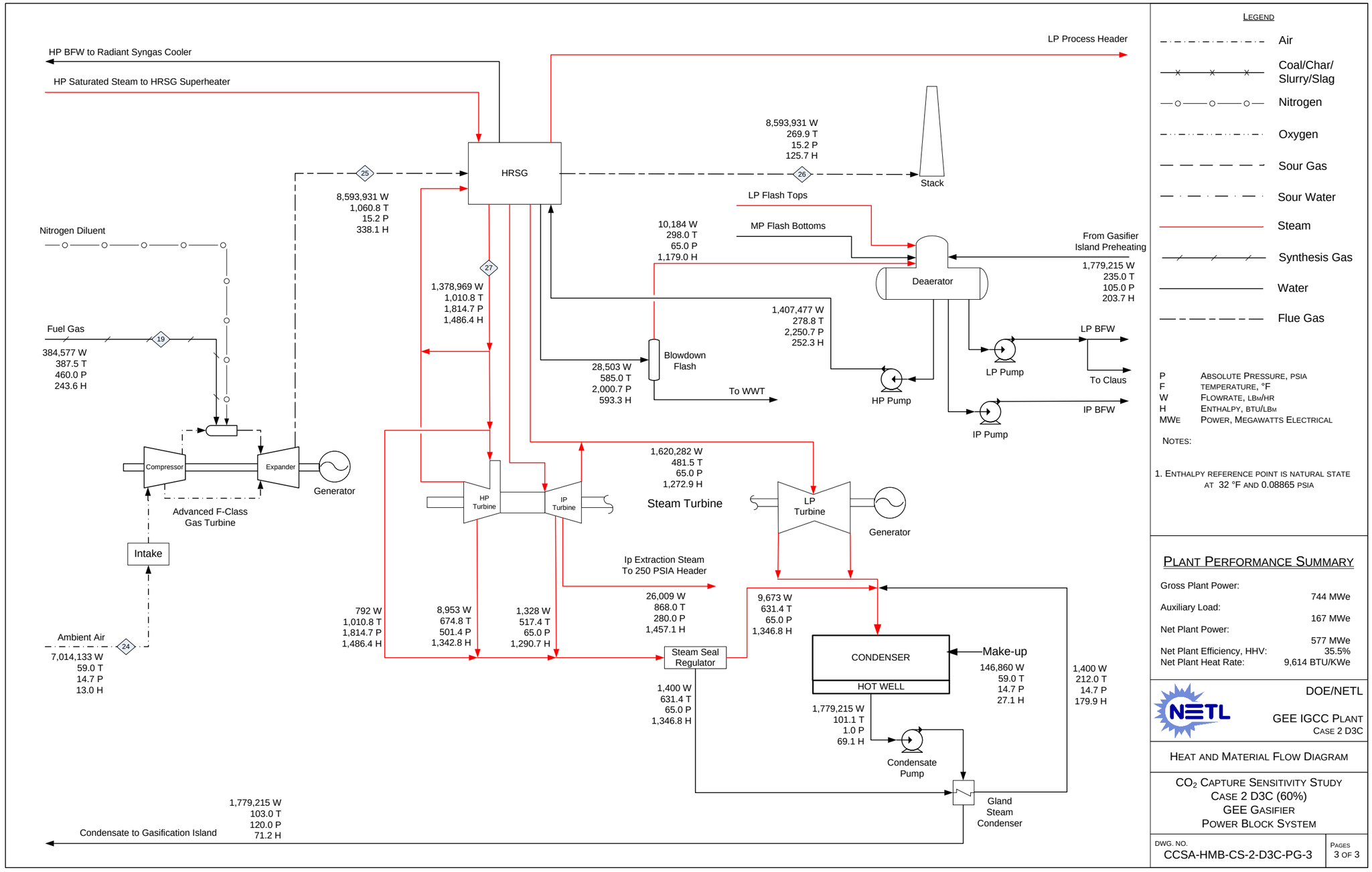

Exhibit 4-92 Case 2 D3D (75%) Heat and Mass Balance, GEE Gasifier and ASU

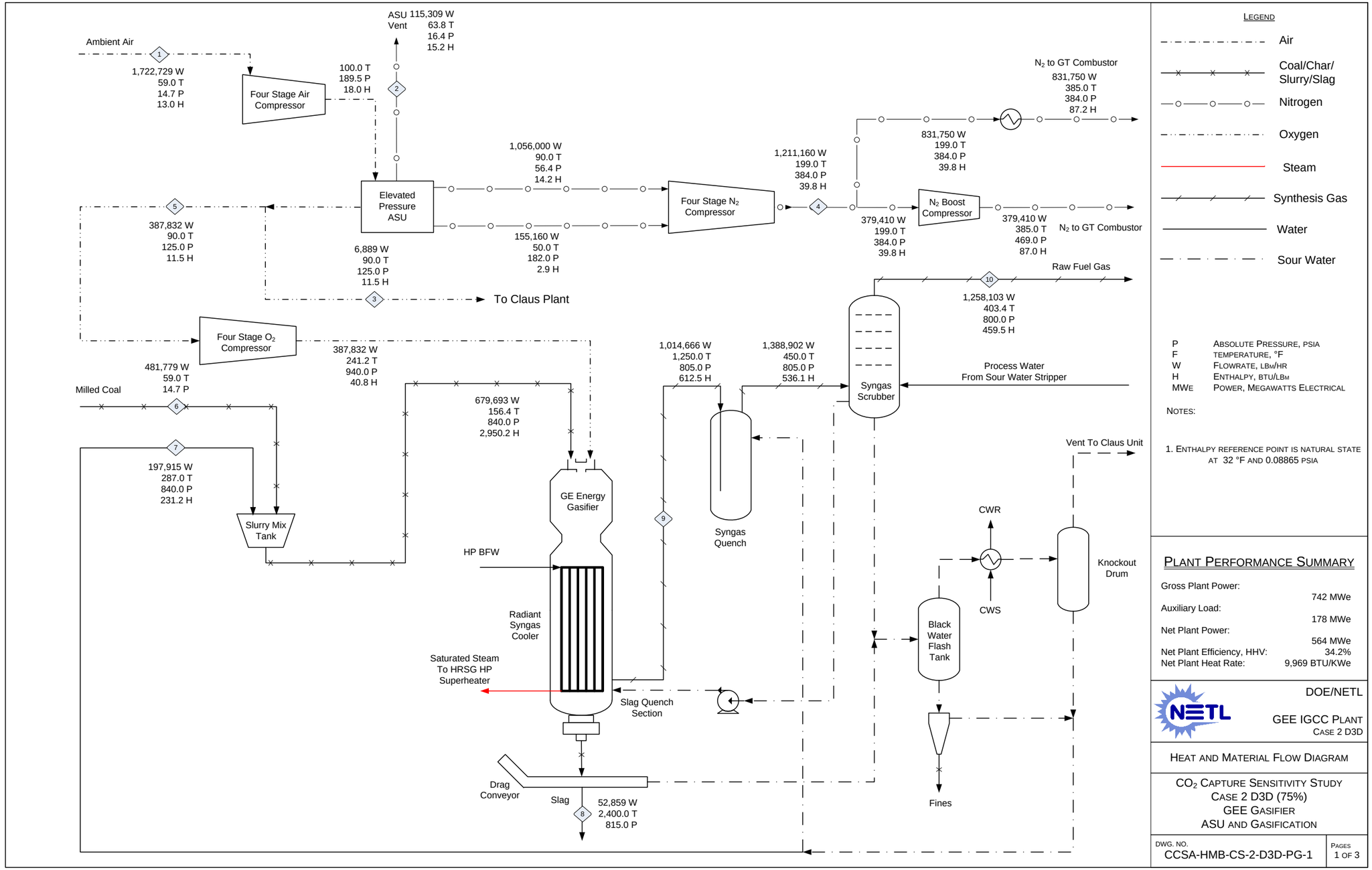

Exhibit 4-93 Case 2 D3D (75%) Heat and Mass Balance, Syngas Cleanup

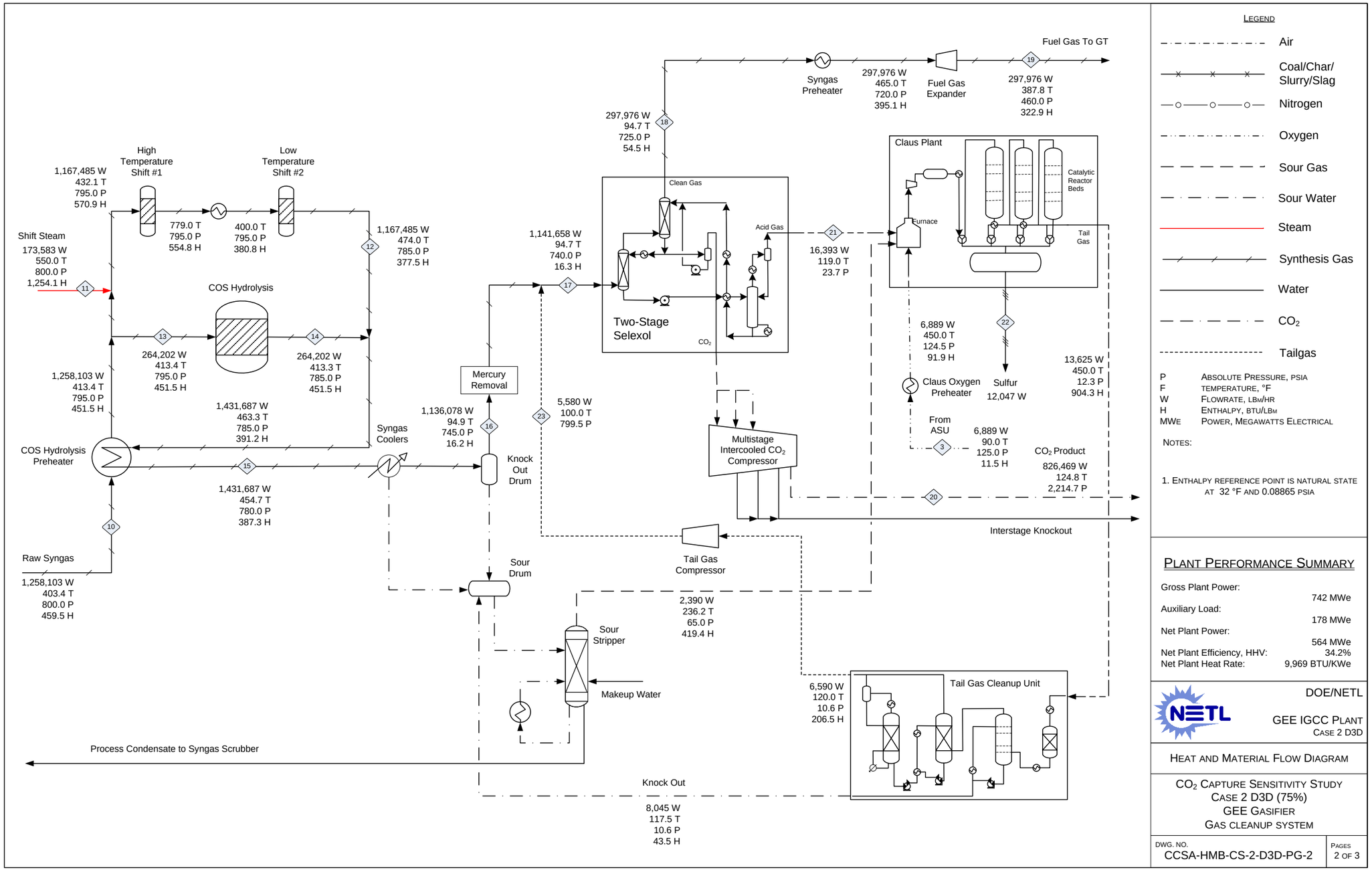

Exhibit 4-94 Case 2 D3D (75%) Heat and Mass Balance, Power Block

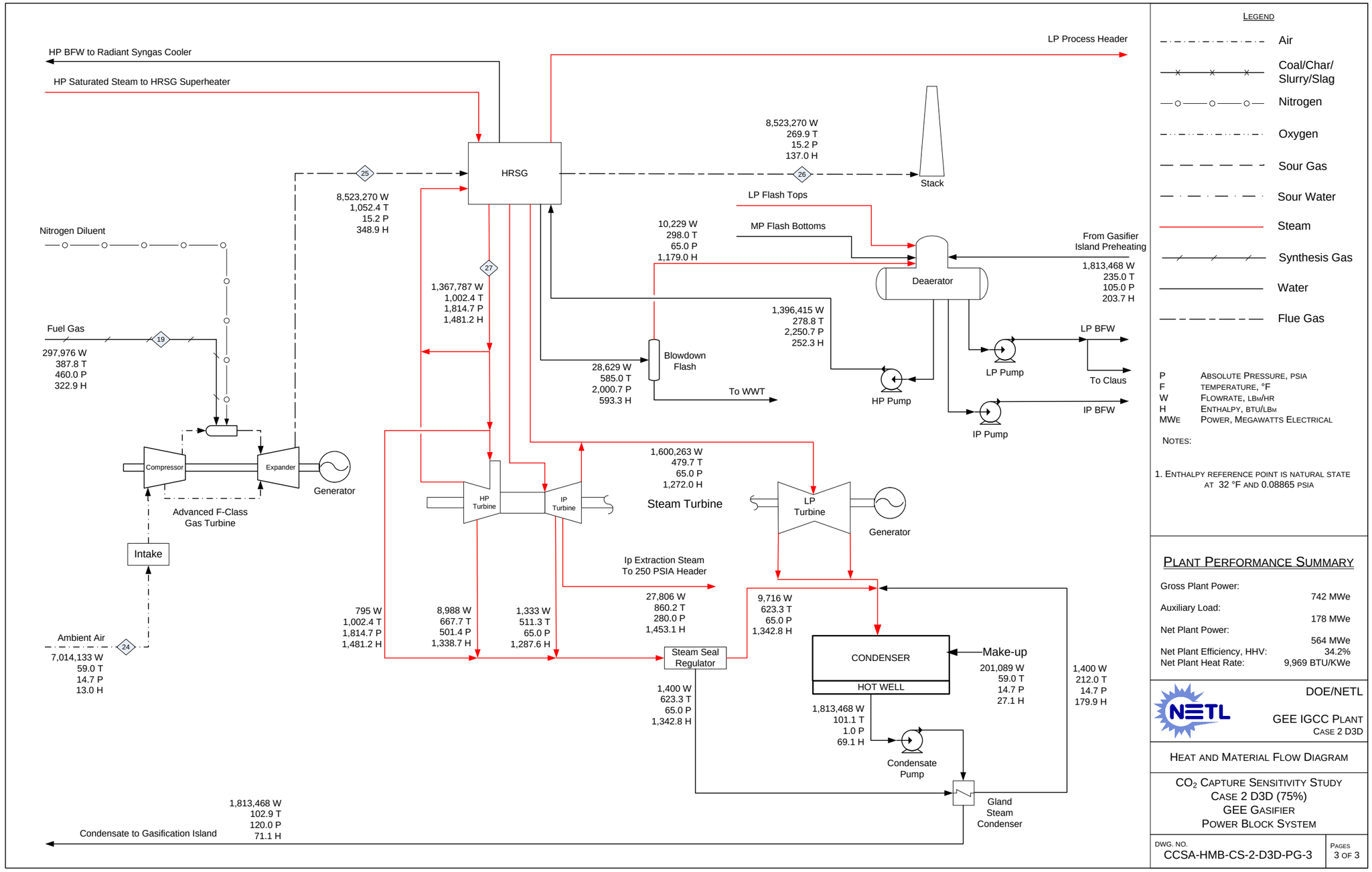

Exhibit 4-95 Case 2 D3E (85%) Heat and Mass Balance, GEE Gasifier and ASU

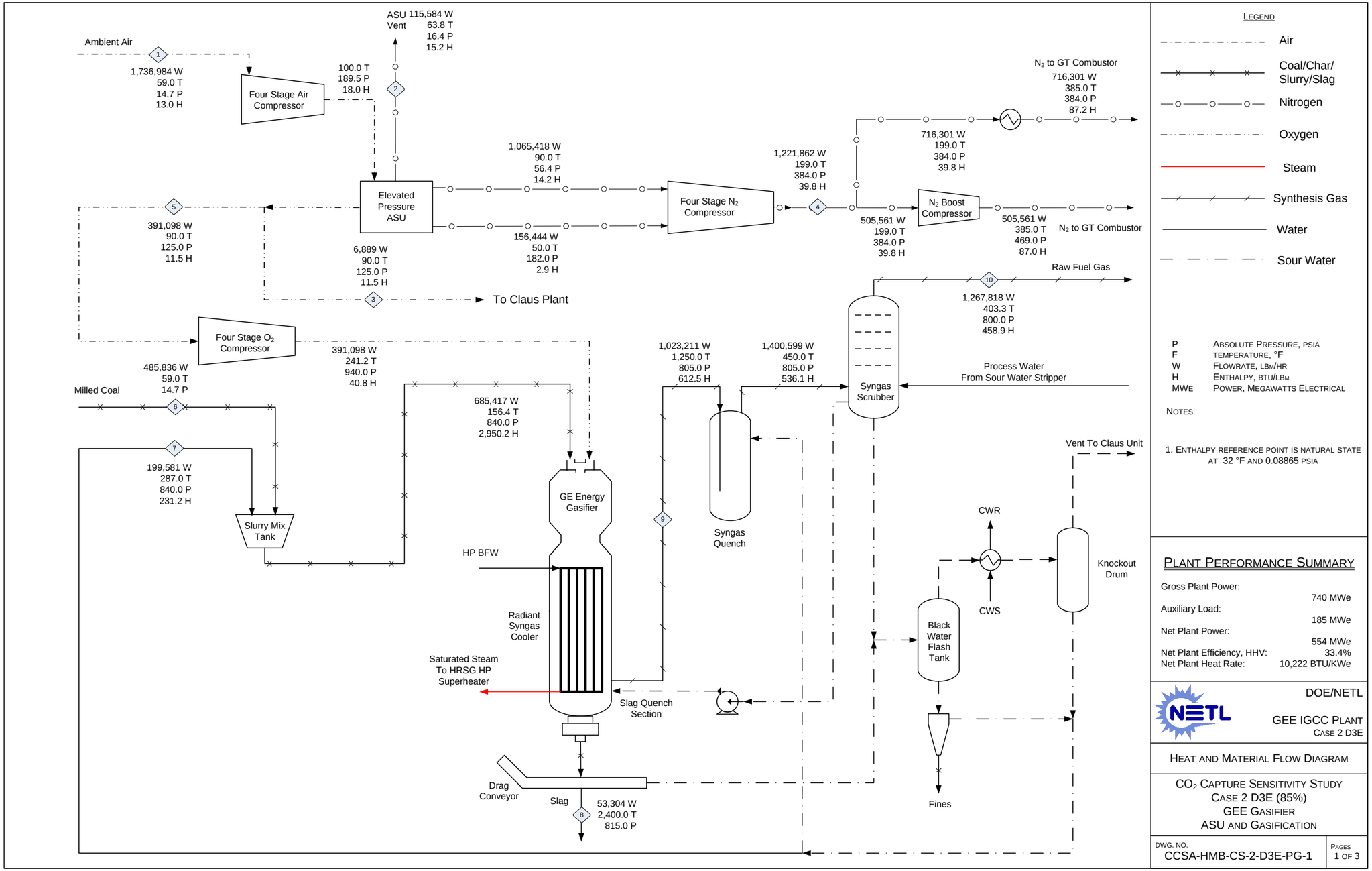

Exhibit 4-96 Case 2 D3E (85%) Heat and Mass Balance, Syngas Cleanup

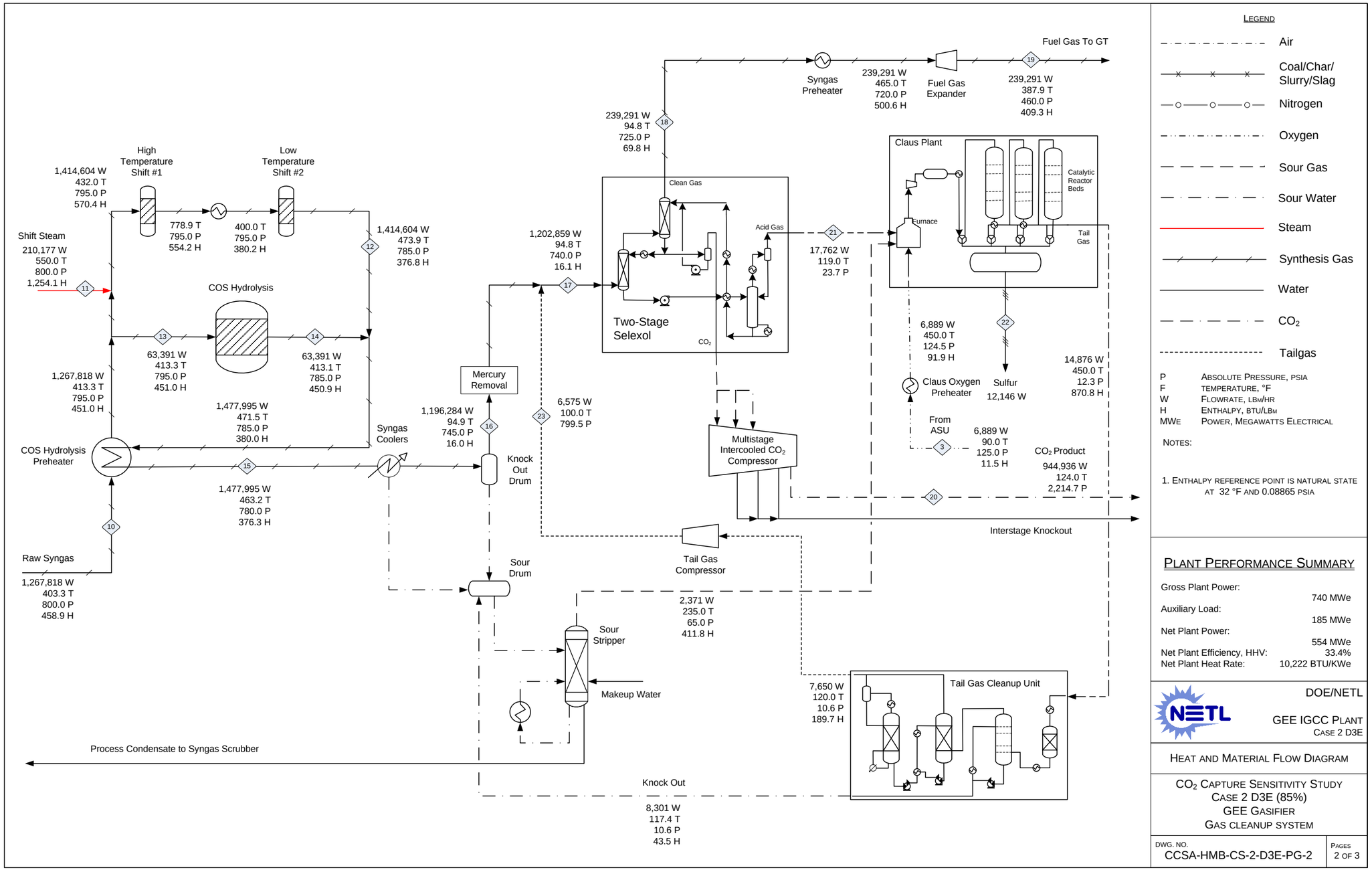

Exhibit 4-97 Case 2 D3E (85%) Heat and Mass Balance, Power Block

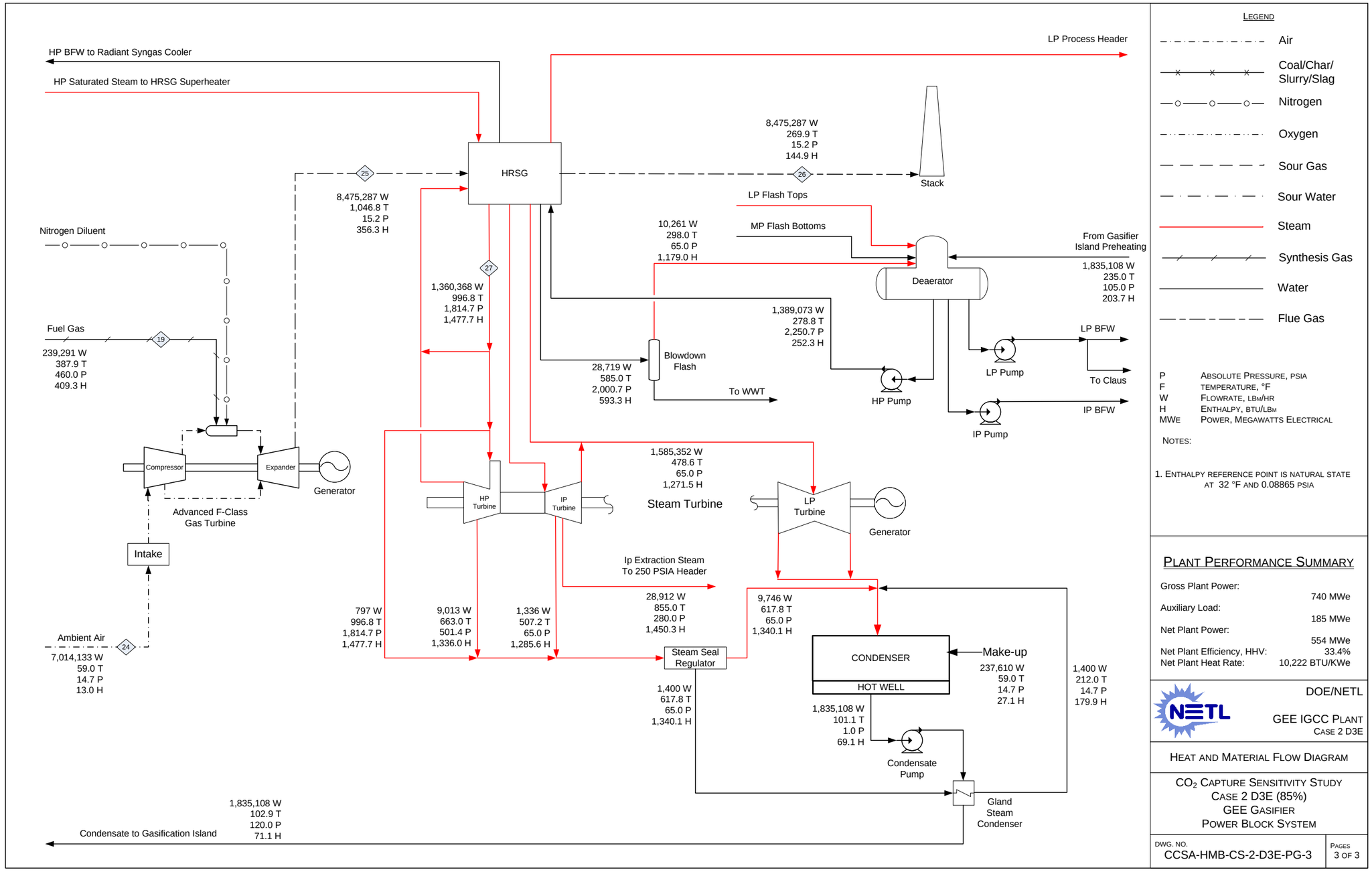

This page intentionally left blank

Exhibit 4-98 Case 2 D3A (25%) Energy Balance

	HHV	Sensible + Latent	Power	Total
Heat In GJ/hr (MMBtu/hr)				
Coal	5,696 (5,399)	4.8 (4.5)	0 (0)	5,701 (5,403)
ASU Air	0 (0)	22.7 (21.5)	0 (0)	23 (22)
GT Air	0 (0)	96.2 (91.2)	0 (0)	96 (91)
Water	0 (0)	66.8 (63.3)	0 (0)	67 (63)
Totals	**5,696 (5,399)**	**190.5 (180.5)**	**0 (0)**	**5,887 (5,579)**
Heat Out GJ/hr (MMBtu/hr)				
ASU Vent	0 (0)	1.9 (1.8)	0 (0)	2 (2)
Slag	88 (83)	36.0 (34.1)	0 (0)	124 (117)
Sulfur	49 (46)	0.6 (0.6)	0 (0)	49 (47)
CO_2	0 (0)	-13.0 (-12.4)	0 (0)	-13 (-12)
Gasifier Heat Loss	0 (0)	42.4 (40.2)	0 (0)	42 (40)
Combustion Turbine Heat Loss	0 (0)	63 (60)	0 (0)	63 (60)
HRSG Flue Gas	0 (0)	937 (888)	0 (0)	937 (888)
Cooling Tower*	0 (0)	2,073 (1,965)	0 (0)	2,073 (1,965)
Process Losses**	0 (0)	424 (402)	0 (0)	424 (402)
Net Power	0 (0)	0.0 (0.0)	2,185 (2,071)	2,185 (2,071)
Totals	**136 (129)**	**3,565 (3,379)**	**2,185 (2,071)**	**5,887 (5,579)**

Note: Italicized numbers are estimated
Reference conditions are 0 °C (32.02 °F) & 0.6 kPa (0.089 psia)
* Includes Condenser, Cooling Tower Blowdown, and the following Non-Condenser Cooling Tower Loads: ASU compressor intercoolers, CO_2 compressor intercoolers, sour water stripper condenser, syngas cooler (low level heat rejection), and extraction air cooler.
** Calculated by difference to close the energy balance.

Exhibit 4-99 Case 2 D3B (45%) Energy Balance

	HHV	Sensible + Latent	Power	Total
Heat In GJ/hr (MMBtu/hr)				
Coal	5,783 (5,481)	4.8 (4.6)	0 (0)	5,788 (5,486)
ASU Air	0 (0)	23.0 (21.8)	0 (0)	23 (22)
GT Air	0 (0)	96.2 (91.2)	0 (0)	96 (91)
Water	0 (0)	71.7 (68.0)	0 (0)	72 (68)
Totals	**5,783 (5,481)**	**195.8 (185.6)**	**0 (0)**	**5,979 (5,667)**
Heat Out GJ/hr (MMBtu/hr)				
ASU Vent	0 (0)	1.8 (1.7)	0 (0)	2 (2)
Slag	89 (84)	36.5 (34.6)	0 (0)	126 (119)
Sulfur	49 (47)	0.6 (0.6)	0 (0)	50 (47)
CO_2	0 (0)	-31.7 (-30.0)	0 (0)	-32 (-30)
Gasifier Heat Loss	0 (0)	43.1 (40.8)	0 (0)	43 (41)
Combustion Turbine Heat Loss	0 (0)	63 (60)	0 (0)	63 (60)
HRSG Flue Gas	0 (0)	1,048 (994)	0 (0)	1,048 (994)
Cooling Tower*	0 (0)	2,115 (2,005)	0 (0)	2,115 (2,005)
Process Losses**	0 (0)	439 (416)	0 (0)	439 (416)
Net Power	0 (0)	0.0 (0.0)	2,124 (2,013)	2,124 (2,013)
Totals	**138 (131)**	**3,716 (3,522)**	**2,124 (2,013)**	**5,979 (5,667)**

Note: Italicized numbers are estimated
Reference conditions are 0 °C (32.02 °F) & 0.6 kPa (0.089 psia)
* Includes Condenser, Cooling Tower Blowdown, and the following Non-Condenser Cooling Tower Loads: ASU compressor intercoolers, CO_2 compressor intercoolers, sour water stripper condenser, syngas cooler (low level heat rejection), and extraction air cooler.
** Calculated by difference to close the energy balance.

Exhibit 4-100 Case 2 D3C (60%) Energy Balance

	HHV	Sensible + Latent	Power	Total
Heat In GJ/hr (MMBtu/hr)				
Coal	5,857 (5,551)	4.9 (4.6)	0 (0)	5,862 (5,556)
ASU Air	0 (0)	23.3 (22.1)	0 (0)	23 (22)
GT Air	0 (0)	96.2 (91.2)	0 (0)	96 (91)
Water	0 (0)	75.5 (71.6)	0 (0)	76 (72)
Totals	**5,857 (5,551)**	**199.9 (189.5)**	**0 (0)**	**6,057 (5,741)**
Heat Out GJ/hr (MMBtu/hr)				
ASU Vent	0 (0)	1.8 (1.7)	0 (0)	2 (2)
Slag	90 (86)	37.0 (35.0)	0 (0)	127 (121)
Sulfur	50 (47)	0.6 (0.6)	0 (0)	51 (48)
CO_2	0 (0)	-45.7 (-43.3)	0 (0)	-46 (-43)
Gasifier Heat Loss	0 (0)	43.6 (41.3)	0 (0)	44 (41)
Combustion Turbine Heat Loss	0 (0)	63 (60)	0 (0)	63 (60)
HRSG Flue Gas	0 (0)	1,140 (1,080)	0 (0)	1,140 (1,080)
Cooling Tower*	0 (0)	2,143 (2,031)	0 (0)	2,143 (2,031)
Process Losses**	0 (0)	455 (431)	0 (0)	455 (431)
Net Power	0 (0)	0.0 (0.0)	2,079 (1,970)	2,079 (1,970)
Totals	**140 (133)**	**3,838 (3,638)**	**2,079 (1,970)**	**6,057 (5,741)**

Note: Italicized numbers are estimated
Reference conditions are 0 °C (32.02 °F) & 0.6 kPa (0.089 psia)
* Includes Condenser, Cooling Tower Blowdown, and the following Non-Condenser Cooling Tower Loads: ASU compressor intercoolers, CO_2 compressor intercoolers, sour water stripper condenser, syngas cooler (low level heat rejection), and extraction air cooler.
** Calculated by difference to close the energy balance.

Exhibit 4-101 Case 2 D3D (75%) Energy Balance

	HHV	Sensible + Latent	Power	Total
Heat In GJ/hr (MMBtu/hr)				
Coal	5,930 (5,620)	5.0 (4.7)	0 (0)	5,935 (5,625)
ASU Air	0 (0)	23.6 (22.4)	0 (0)	24 (22)
GT Air	0 (0)	96.2 (91.2)	0 (0)	96 (91)
Water	0 (0)	79.3 (75.1)	0 (0)	79 (75)
Totals	**5,930 (5,620)**	**204.0 (193.4)**	**0 (0)**	**6,134 (5,814)**
Heat Out GJ/hr (MMBtu/hr)				
ASU Vent	0 (0)	1.8 (1.7)	0 (0)	2 (2)
Slag	91 (87)	37.4 (35.5)	0 (0)	129 (122)
Sulfur	51 (48)	0.6 (0.6)	0 (0)	51 (49)
CO_2	0 (0)	-59.7 (-56.6)	0 (0)	-60 (-57)
Gasifier Heat Loss	0 (0)	44.1 (41.8)	0 (0)	44 (42)
Combustion Turbine Heat Loss	0 (0)	63 (60)	0 (0)	63 (60)
HRSG Flue Gas	0 (0)	1,232 (1,168)	0 (0)	1,232 (1,168)
Cooling Tower*	0 (0)	2,167 (2,054)	0 (0)	2,167 (2,054)
Process Losses**	0 (0)	476 (451)	0 (0)	476 (451)
Net Power	0 (0)	0.0 (0.0)	2,030 (1,924)	2,030 (1,924)
Totals	**142 (135)**	**3,962 (3,755)**	**2,030 (1,924)**	**6,134 (5,814)**

Note: Italicized numbers are estimated
Reference conditions are 0 °C (32.02 °F) & 0.6 kPa (0.089 psia)
* Includes Condenser, Cooling Tower Blowdown, and the following Non-Condenser Cooling Tower Loads: ASU compressor intercoolers, CO_2 compressor intercoolers, sour water stripper condenser, syngas cooler (low level heat rejection), and extraction air cooler.
** Calculated by difference to close the energy balance.

Exhibit 4-102 Case 2 D3E (85%) Energy Balance

	HHV	Sensible + Latent	Power	Total
Heat In GJ/hr (MMBtu/hr)				
Coal	5,980 (5,668)	5.0 (4.7)	0 (0)	5,985 (5,673)
ASU Air	0 (0)	23.8 (22.6)	0 (0)	24 (23)
GT Air	0 (0)	96.2 (91.2)	0 (0)	96 (91)
Water	0 (0)	81.8 (77.6)	0 (0)	82 (78)
Totals	**5,980 (5,668)**	**206.8 (196.0)**	**0 (0)**	**6,187 (5,864)**
Heat Out GJ/hr (MMBtu/hr)				
ASU Vent	0 (0)	1.8 (1.8)	0 (0)	2 (2)
Slag	92 (87)	37.7 (35.8)	0 (0)	130 (123)
Sulfur	51 (48)	0.6 (0.6)	0 (0)	52 (49)
CO_2	0 (0)	-69.2 (-65.6)	0 (0)	-69 (-66)
Gasifier Heat Loss	0 (0)	44.5 (42.2)	0 (0)	45 (42)
Combustion Turbine Heat Loss	0 (0)	63 (60)	0 (0)	63 (60)
HRSG Flue Gas	0 (0)	1,295 (1,228)	0 (0)	1,295 (1,228)
Cooling Tower*	0 (0)	2,183 (2,069)	0 (0)	2,183 (2,069)
Process Losses**	0 (0)	490 (465)	0 (0)	490 (465)
Net Power	0 (0)	0.0 (0.0)	1,996 (1,892)	1,996 (1,892)
Totals	**143 (136)**	**4,047 (3,836)**	**1,996 (1,892)**	**6,187 (5,864)**

Note: Italicized numbers are estimated
Reference conditions are 0 °C (32.02 °F) & 0.6 kPa (0.089 psia)
* Includes Condenser, Cooling Tower Blowdown, and the following Non-Condenser Cooling Tower Loads: ASU compressor intercoolers, CO_2 compressor intercoolers, sour water stripper condenser, syngas cooler (low level heat rejection), and extraction air cooler.
** Calculated by difference to close the energy balance.

Exhibit 4-103 Case 2 D3A Energy Balance Sankey Diagram

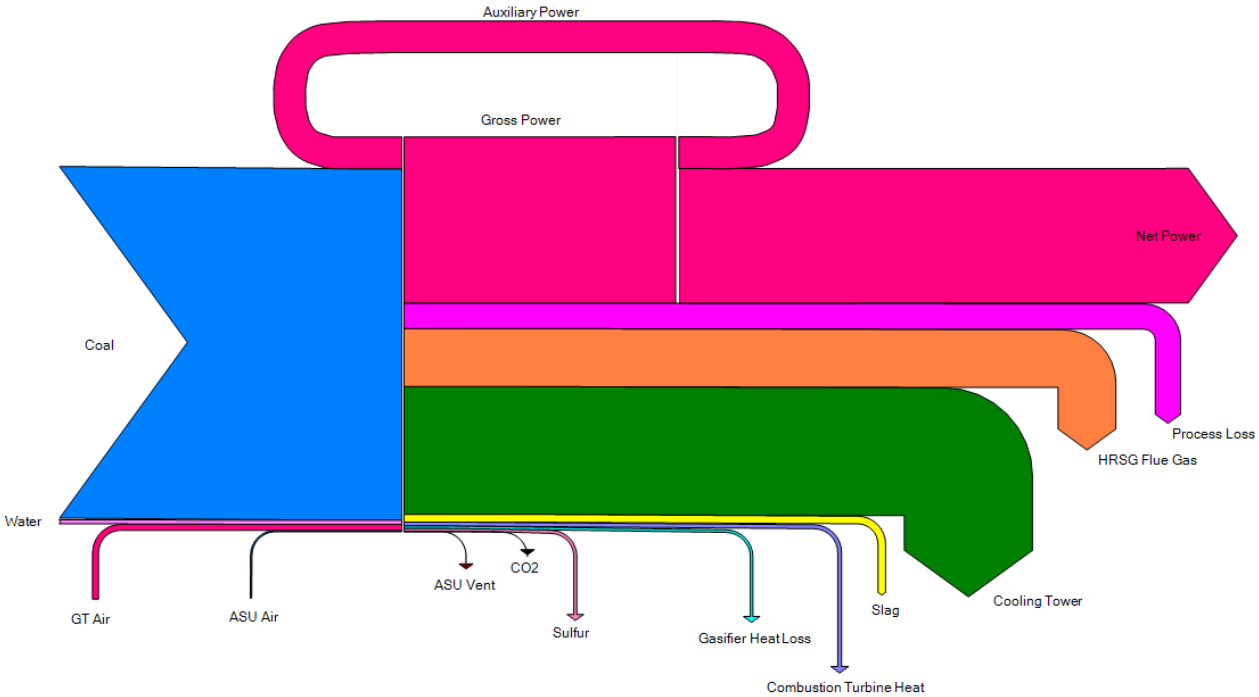

Exhibit 4-104 Case 2 D3B Energy Balance Sankey Diagram

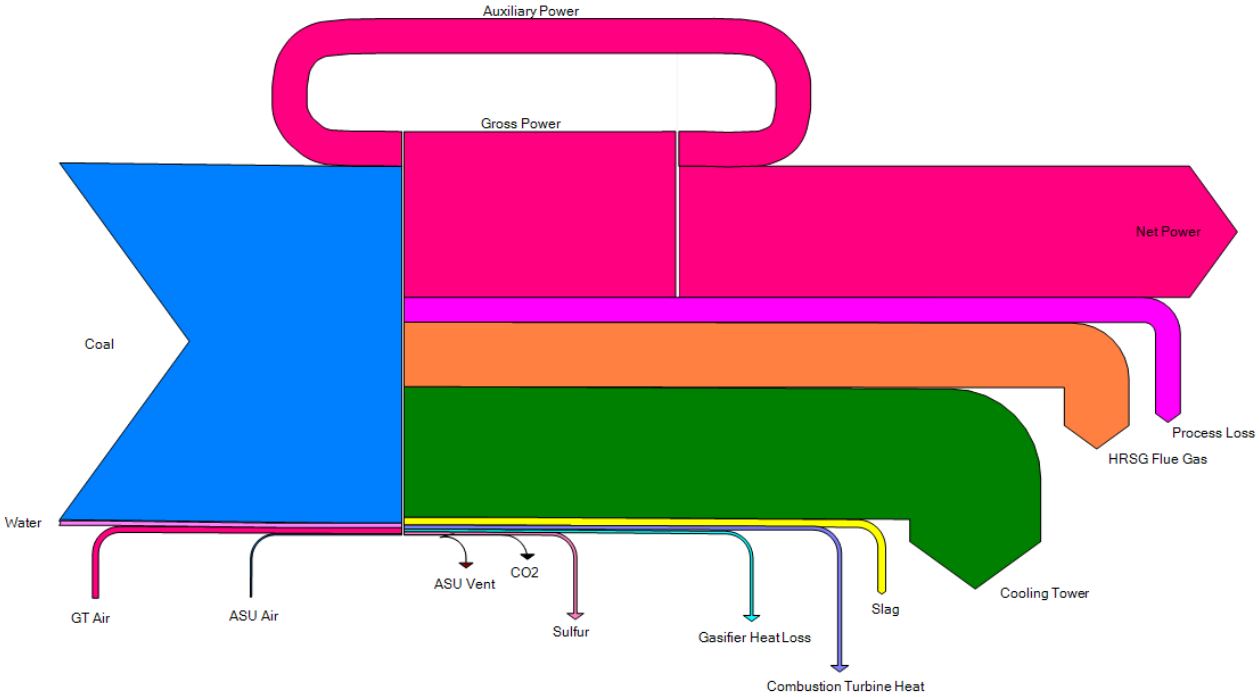

Exhibit 4-105 Case 2 D3C Energy Balance Sankey Diagram

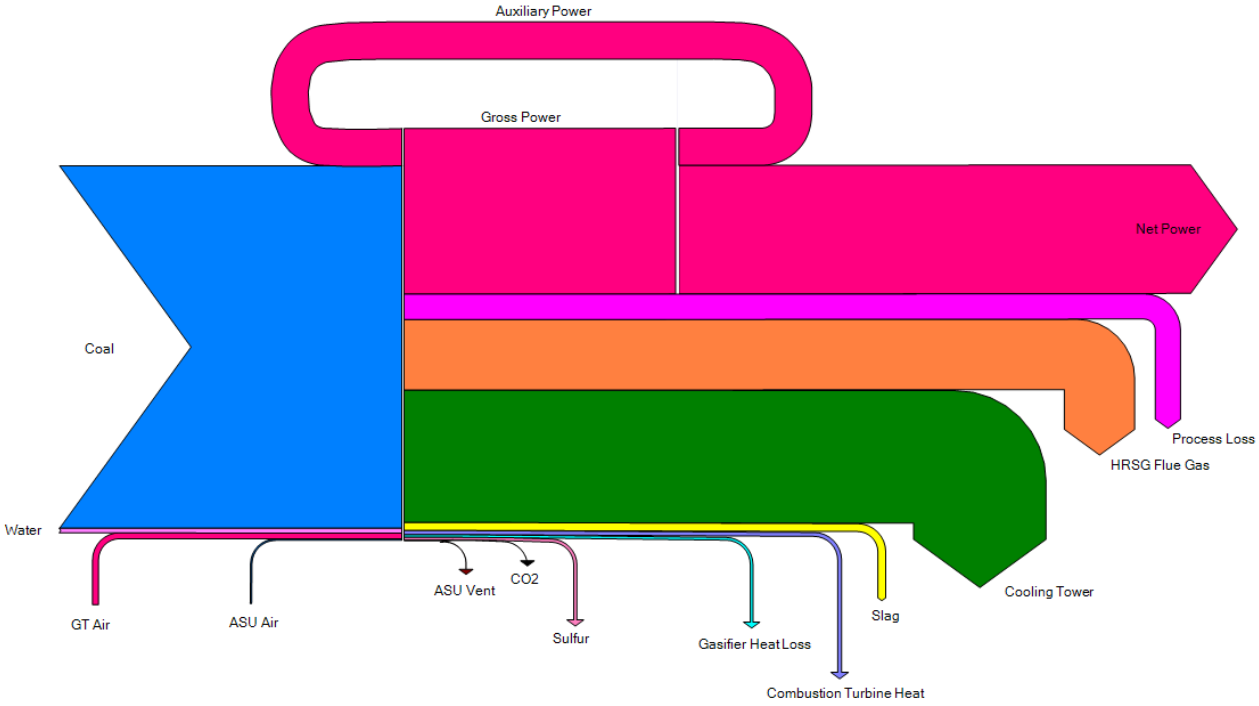

Exhibit 4-106 Case 2 D3D Energy Balance Sankey Diagram

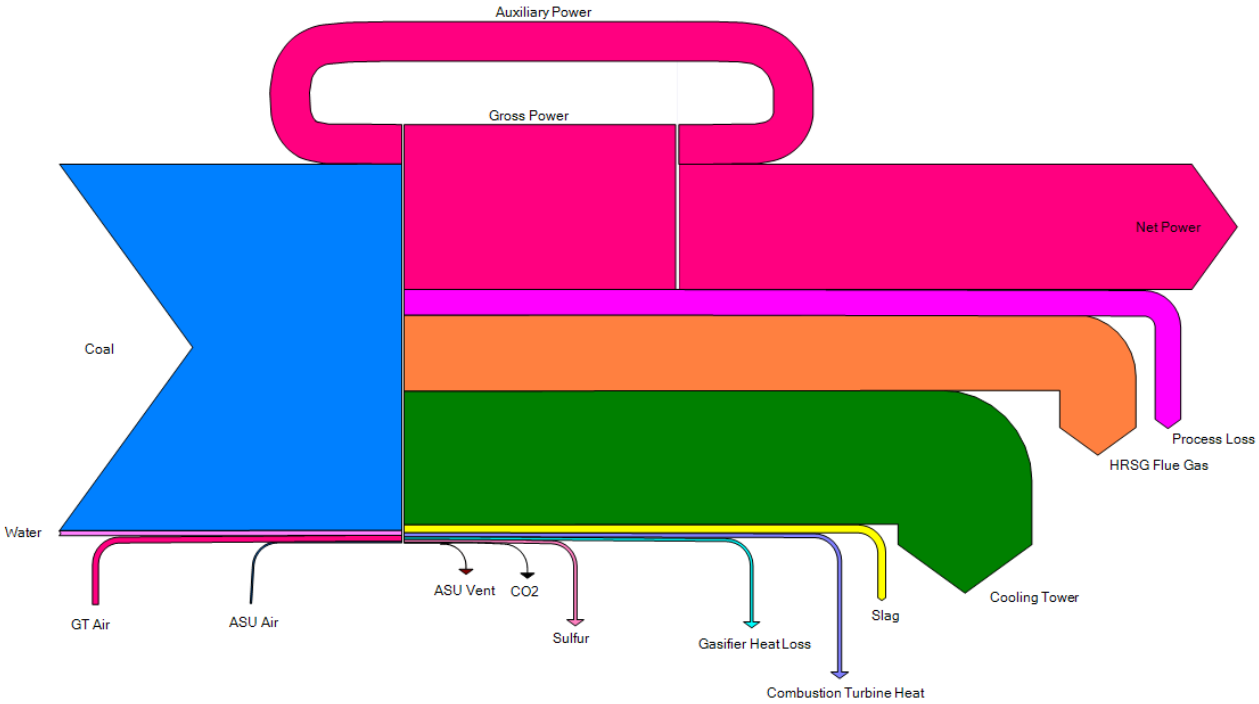

Exhibit 4-107 Case 2 D3E Energy Balance Sankey Diagram

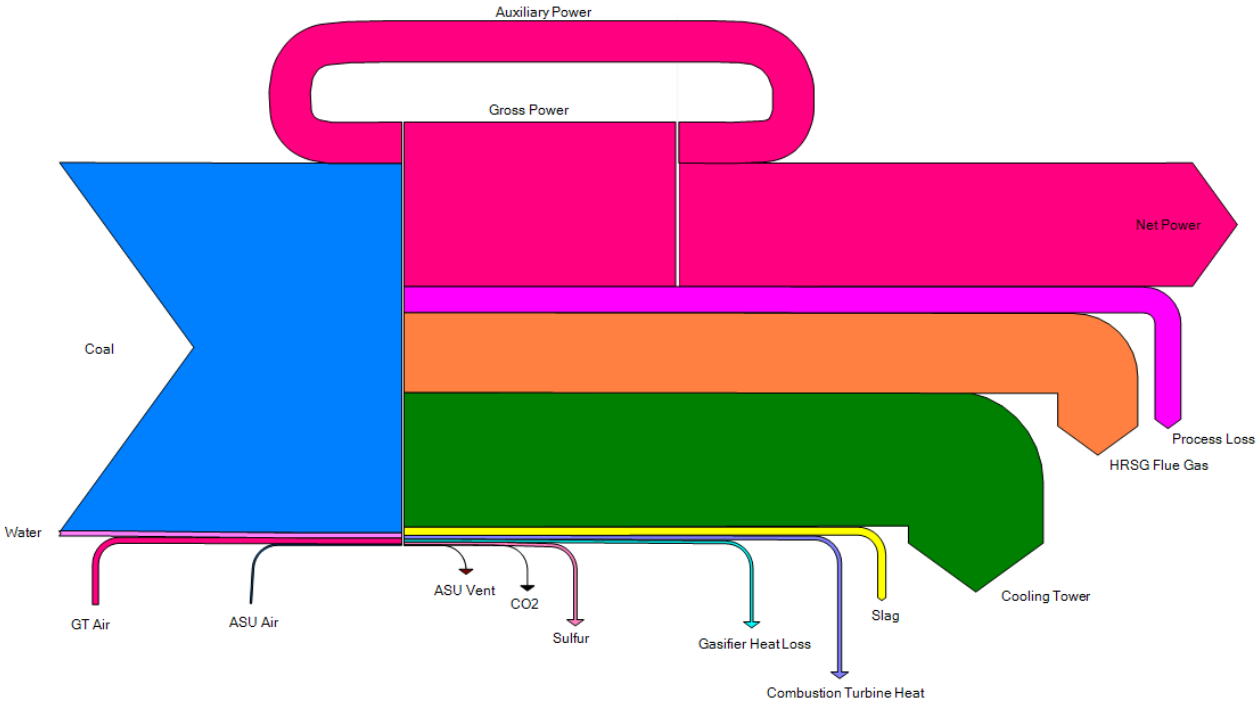

4.3.3.2 Major Equipment List for Case 2 D3

Major equipment items for Case 2 D3 (two WGS with bypass) are shown in the following tables. The accounts used in the equipment list correspond to the account numbers used in the cost estimates. In general, the design conditions include a 10 percent contingency for flows and heat duties and a 21 percent contingency for heads on pumps and fans.

ACCOUNT 1 COAL HANDLING

Equipment No.	Description	Type	Design Conditions					Opr Qty. (Spares)
			D3A	D3B	D3C	D3D	D3E	
1	Bottom Trestle Dumper and Receiving Hoppers	N/A	181 tonne (200 ton)	181 tonne (200 ton)	181 tonne (200 ton)	181 tonne (200 ton)	181 tonne (200 ton)	2 (0)
2	Feeder	Belt	572 tonne/hr (630 tph)	572 tonne/hr (630 tph)	572 tonne/hr (630 tph)	572 tonne/hr (630 tph)	572 tonne/hr (630 tph)	2 (0)
3	Conveyor No. 1	Belt	1,134 tonne/hr (1,250 tph)	1,134 tonne/hr (1,250 tph)	1,134 tonne/hr (1,250 tph)	1,134 tonne/hr (1,250 tph)	1,134 tonne/hr (1,250 tph)	1 (0)
4	Transfer Tower No. 1	Enclosed	N/A	N/A	N/A	N/A	N/A	1 (0)
5	Conveyor No. 2	Belt	1,134 tonne/hr (1,250 tph)	1,134 tonne/hr (1,250 tph)	1,134 tonne/hr (1,250 tph)	1,134 tonne/hr (1,250 tph)	1,134 tonne/hr (1,250 tph)	1 (0)
6	As-Received Coal Sampling System	Two-stage	N/A	N/A	N/A	N/A	N/A	1 (0)
7	Stacker/Reclaimer	Traveling, linear	1,134 tonne/hr (1,250 tph)	1,134 tonne/hr (1,250 tph)	1,134 tonne/hr (1,250 tph)	1,134 tonne/hr (1,250 tph)	1,134 tonne/hr (1,250 tph)	1 (0)
8	Reclaim Hopper	N/A	45 tonne (50 ton)	45 tonne (50 ton)	45 tonne (50 ton)	45 tonne (50 ton)	45 tonne (50 ton)	2 (1)
9	Feeder	Vibratory	172 tonne/hr (190 tph)	172 tonne/hr (190 tph)	181 tonne/hr (200 tph)	181 tonne/hr (200 tph)	181 tonne/hr (200 tph)	2 (1)
10	Conveyor No. 3	Belt w/ tripper	345 tonne/hr (380 tph)	354 tonne/hr (390 tph)	354 tonne/hr (390 tph)	363 tonne/hr (400 tph)	363 tonne/hr (400 tph)	1 (0)
11	Crusher Tower	N/A	N/A	N/A	N/A	N/A	N/A	1 (0)
12	Coal Surge Bin w/ Vent Filter	Dual outlet	172 tonne (190 ton)	172 tonne (190 ton)	181 tonne (200 ton)	181 tonne (200 ton)	181 tonne (200 ton)	2 (0)
13	Crusher	Impactor reduction	8 cm x 0 - 3 cm x 0 (3" x 0 - 1-1/4" x 0)	8 cm x 0 - 3 cm x 0 (3" x 0 - 1-1/4" x 0)	8 cm x 0 - 3 cm x 0 (3" x 0 - 1-1/4" x 0)	8 cm x 0 - 3 cm x 0 (3" x 0 - 1-1/4" x 0)	8 cm x 0 - 3 cm x 0 (3" x 0 - 1-1/4" x 0)	2 (0)
14	As-Fired Coal Sampling System	Swing hammer	N/A	N/A	N/A	N/A	N/A	1 (1)
15	Conveyor No. 4	Belt w/tripper	345 tonne/hr (380 tph)	354 tonne/hr (390 tph)	354 tonne/hr (390 tph)	363 tonne/hr (400 tph)	363 tonne/hr (400 tph)	1 (0)
16	Transfer Tower No. 2	Enclosed	N/A	N/A	N/A	N/A	N/A	1 (0)
17	Conveyor No. 5	Belt w/ tripper	345 tonne/hr (380 tph)	354 tonne/hr (390 tph)	354 tonne/hr (390 tph)	363 tonne/hr (400 tph)	363 tonne/hr (400 tph)	1 (0)
18	Coal Silo w/ Vent Filter and Slide Gates	Field erected	726 tonne (800 ton)	816 tonne (900 ton)	816 tonne (900 ton)	816 tonne (900 ton)	816 tonne (900 ton)	3 (0)

ACCOUNT 2 COAL PREPARATION AND FEED

Equipment No.	Description	Type	Design Condition					Opr Qty. (Spares)
			D3A	D3B	D3C	D3D	D3E	
1	Feeder	Vibratory	73 tonne/h (80 tph)	82 tonne/h (90 tph)	82 tonne/h (90 tph)	82 tonne/h (90 tph)	82 tonne/h (90 tph)	3 (0)
2	Conveyor No. 6	Belt w/tripper	227 tonne/h (250 tph)	236 tonne/h (260 tph)	236 tonne/h (260 tph)	236 tonne/h (260 tph)	245 tonne/h (270 tph)	1 (0)
3	Rod Mill Feed Hopper	Dual Outlet	463 tonne (510 ton)	472 tonne (520 ton)	472 tonne (520 ton)	481 tonne (530 ton)	481 tonne (530 ton)	1 (0)
4	Weigh Feeder	Belt	118 tonne/h (130 tph)	118 tonne/h (130 tph)	118 tonne/h (130 tph)	118 tonne/h (130 tph)	118 tonne/h (130 tph)	2 (0)
5	Rod Mill	Rotary	118 tonne/h (130 tph)	118 tonne/h (130 tph)	118 tonne/h (130 tph)	118 tonne/h (130 tph)	118 tonne/h (130 tph)	2 (0)
6	Slurry Water Storage Tank with Agitator	Field erected	284,968 liters (75,280 gal)	289,321 liters (76,430 gal)	293,031 liters (77,410 gal)	296,665 liters (78,370 gal)	299,163 liters (79,030 gal)	2 (0)

Equipment No.	Description	Type	Design Condition					Opr Qty. (Spares)
			D3A	D3B	D3C	D3D	D3E	
7	Slurry Water Pumps	Centrifugal	795 lpm (210 gpm)	795 lpm (210 gpm)	833 lpm (220 gpm)	833 lpm (220 gpm)	833 lpm (220 gpm)	2 (1)
8	Trommel Screen	Coarse	163 tonne/h (180 tph)	163 tonne/h (180 tph)	163 tonne/h (180 tph)	172 tonne/h (190 tph)	172 tonne/h (190 tph)	2 (0)
9	Rod Mill Discharge Tank with Agitator	Field erected	372,790 liters (98,480 gal)	378,506 liters (99,990 gal)	383,352 liters (101,270 gal)	388,121 liters (102,530 gal)	391,377 liters (103,390 gal)	2 (0)
10	Rod Mill Product Pumps	Centrifugal	3,028 lpm (800 gpm)	3,028 lpm (800 gpm)	3,028 lpm (800 gpm)	3,407 lpm (900 gpm)	3,407 lpm (900 gpm)	2 (2)
11	Slurry Storage Tank with Agitator	Field erected	1,118,598 liters (295,500 gal)	1,135,633 liters (300,000 gal)	1,150,017 liters (303,800 gal)	1,164,402 liters (307,600 gal)	1,174,244 liters (310,200 gal)	2 (0)
12	Slurry Recycle Pumps	Centrifugal	6,057 lpm (1,600 gpm)	6,435 lpm (1,700 gpm)	6,435 lpm (1,700 gpm)	6,435 lpm (1,700 gpm)	6,435 lpm (1,700 gpm)	2 (2)
13	Slurry Product Pumps	Positive displacement	3,028 lpm (800 gpm)	3,028 lpm (800 gpm)	3,028 lpm (800 gpm)	3,407 lpm (900 gpm)	3,407 lpm (900 gpm)	2 (2)

ACCOUNT 3 FEEDWATER AND MISCELLANEOUS SYSTEMS AND EQUIPMENT

Equipment No.	Description	Type	Design Condition					Opr Qty. (Spares)
			D3A	D3B	D3C	D3D	D3E	
1	Demineralized Water Storage Tank	Vertical, cylindrical, outdoor	1,086,413 liters (287,000 gal)	1,097,769 liters (290,000 gal)	1,090,199 liters (288,000 gal)	1,078,842 liters (285,000 gal)	1,075,057 liters (284,000 gal)	2 (0)
2	Condensate Pumps	Vertical canned	7,041 lpm @ 91 m H_2O (1,860 gpm @ 300 ft H_2O)	7,306 lpm @ 91 m H_2O (1,930 gpm @ 300 ft H_2O)	7,457 lpm @ 91 m H_2O (1,970 gpm @ 300 ft H_2O)	7,609 lpm @ 91 m H_2O (2,010 gpm @ 300 ft H_2O)	7,684 lpm @ 91 m H_2O (2,030 gpm @ 300 ft H_2O)	2 (1)
3	Deaerator (integral w/ HRSG)	Horizontal spray type	483,983 kg/hr (1,067,000 lb/hr)	499,859 kg/hr (1,102,000 lb/hr)	509,384 kg/hr (1,123,000 lb/hr)	518,456 kg/hr (1,143,000 lb/hr)	524,353 kg/hr (1,156,000 lb/hr)	2 (0)
4	Intermediate Pressure Feedwater Pump	Horizontal centrifugal, single stage	8,101 lpm @ 27 m H_2O (2,140 gpm @ 90 ft H_2O)	8,176 lpm @ 27 m H_2O (2,160 gpm @ 90 ft H_2O)	8,025 lpm @ 27 m H_2O (2,120 gpm @ 90 ft H_2O)	7,874 lpm @ 27 m H_2O (2,080 gpm @ 90 ft H_2O)	7,760 lpm @ 27 m H_2O (2,050 gpm @ 90 ft H_2O)	2 (1)
5	High Pressure Feedwater Pump No. 1	Barrel type, multi-stage, centrifugal	HP water: 6,132 lpm @ 1,859 m H_2O (1,620 gpm @ 6,100 ft H_2O)	HP water: 6,132 lpm @ 1,859 m H_2O (1,620 gpm @ 6,100 ft H_2O)	HP water: 6,095 lpm @ 1,859 m H_2O (1,610 gpm @ 6,100 ft H_2O)	HP water: 6,057 lpm @ 1,859 m H_2O (1,600 gpm @ 6,100 ft H_2O)	HP water: 6,019 lpm @ 1,859 m H_2O (1,590 gpm @ 6,100 ft H_2O)	2 (1)
6	High Pressure Feedwater Pump No. 2	Barrel type, multi-stage, centrifugal	IP water: 1,476 lpm @ 223 m H_2O (390 gpm @ 730 ft H_2O)	IP water: 1,514 lpm @ 223 m H_2O (400 gpm @ 730 ft H_2O)	IP water: 1,590 lpm @ 223 m H_2O (420 gpm @ 730 ft H_2O)	IP water: 1,666 lpm @ 223 m H_2O (440 gpm @ 730 ft H_2O)	IP water: 1,741 lpm @ 223 m H_2O (460 gpm @ 730 ft H_2O)	2 (1)
7	Auxiliary Boiler	Shop fabricated, water tube	18,144 kg/hr, 2.8 MPa, 343°C (40,000 lb/hr, 400 psig, 650°F)	18,144 kg/hr, 2.8 MPa, 343°C (40,000 lb/hr, 400 psig, 650°F)	18,144 kg/hr, 2.8 MPa, 343°C (40,000 lb/hr, 400 psig, 650°F)	18,144 kg/hr, 2.8 MPa, 343°C (40,000 lb/hr, 400 psig, 650°F)	18,144 kg/hr, 2.8 MPa, 343°C (40,000 lb/hr, 400 psig, 650°F)	1 (0)
8	Service Air Compressors	Flooded Screw	28 m^3/min @ 0.7 MPa (1,000 scfm @ 100 psig)	28 m^3/min @ 0.7 MPa (1,000 scfm @ 100 psig)	28 m^3/min @ 0.7 MPa (1,000 scfm @ 100 psig)	28 m^3/min @ 0.7 MPa (1,000 scfm @ 100 psig)	28 m^3/min @ 0.7 MPa (1,000 scfm @ 100 psig)	2 (1)
9	Instrument Air Dryers	Duplex, regenerative	28 m^3/min (1,000 scfm)	28 m^3/min (1,000 scfm)	28 m^3/min (1,000 scfm)	28 m^3/min (1,000 scfm)	28 m^3/min (1,000 scfm)	2 (1)
10	Closed Cylce Cooling Heat Exchangers	Plate and frame	247 GJ/hr (234.44802645 MMBtu/hr) each	277 GJ/hr (262.36186405 MMBtu/hr) each	301 GJ/hr (285.73317245 MMBtu/hr) each	327 GJ/hr (309.64151075 MMBtu/hr) each	345 GJ/hr (326.5623988 MMBtu/hr) each	2 (0)
11	Closed Cycle Cooling Water Pumps	Horizontal centrifugal	88,579 lpm @ 21 m H_2O (23,400 gpm @ 70 ft H_2O)	99,178 lpm @ 21 m H_2O (26,200 gpm @ 70 ft H_2O)	108,263 lpm @ 21 m H_2O (28,600 gpm @ 70 ft H_2O)	117,348 lpm @ 21 m H_2O (31,000 gpm @ 70 ft H_2O)	123,783 lpm @ 21 m H_2O (32,700 gpm @ 70 ft H_2O)	2 (1)
12	Engine-Driven Fire Pump	Vertical turbine, diesel engine	3,785 lpm @ 107 m H_2O (1,000 gpm @ 350 ft H_2O)	3,785 lpm @ 107 m H_2O (1,000 gpm @ 350 ft H_2O)	3,785 lpm @ 107 m H_2O (1,000 gpm @ 350 ft H_2O)	3,785 lpm @ 107 m H_2O (1,000 gpm @ 350 ft H_2O)	3,785 lpm @ 107 m H_2O (1,000 gpm @ 350 ft H_2O)	1 (1)
13	Fire Service Booster Pump	Two-stage horizontal centrifugal	2,650 lpm @ 76 m H_2O (700 gpm @ 250 ft H_2O)	2,650 lpm @ 76 m H_2O (700 gpm @ 250 ft H_2O)	2,650 lpm @ 76 m H_2O (700 gpm @ 250 ft H_2O)	2,650 lpm @ 76 m H_2O (700 gpm @ 250 ft H_2O)	2,650 lpm @ 76 m H_2O (700 gpm @ 250 ft H_2O)	1 (1)
14	Raw Water Pumps	Stainless steel, single suction	4,580 lpm @ 18 m H_2O (1,210 gpm @ 60 ft H_2O)	4,921 lpm @ 18 m H_2O (1,300 gpm @ 60 ft H_2O)	5,186 lpm @ 18 m H_2O (1,370 gpm @ 60 ft H_2O)	5,451 lpm @ 18 m H_2O (1,440 gpm @ 60 ft H_2O)	5,640 lpm @ 18 m H_2O (1,490 gpm @ 60 ft H_2O)	2 (1)
15	Ground Water Pumps	Stainless steel, single suction	3,028 lpm @ 268 m H_2O (800 gpm @ 880 ft H_2O)	3,293 lpm @ 268 m H_2O (870 gpm @ 880 ft H_2O)	2,612 lpm @ 268 m H_2O (690 gpm @ 880 ft H_2O)	2,725 lpm @ 268 m H_2O (720 gpm @ 880 ft H_2O)	2,839 lpm @ 268 m H_2O (750 gpm @ 880 ft H_2O)	3 (1)

Equipment No.	Description	Type	Design Condition					Opr Qty. (Spares)
			D3A	D3B	D3C	D3D	D3E	
16	Filtered Water Pumps	Stainless steel, single suction	2,082 lpm @ 49 m H_2O (550 gpm @ 160 ft H_2O)	2,385 lpm @ 49 m H_2O (630 gpm @ 160 ft H_2O)	2,612 lpm @ 49 m H_2O (690 gpm @ 160 ft H_2O)	2,877 lpm @ 49 m H_2O (760 gpm @ 160 ft H_2O)	3,028 lpm @ 49 m H_2O (800 gpm @ 160 ft H_2O)	2 (1)
17	Filtered Water Tank	Vertical, cylindrical	995,563 liter (263,000 gal)	1,139,409 liter (301,000 gal)	1,256,757 liter (332,000 gal)	1,374,104 liter (363,000 gal)	1,453,598 liter (384,000 gal)	2 (0)
18	Makeup Water Demineralizer	Anion, cation, and mixed bed	303 lpm (80 gpm)	568 lpm (150 gpm)	795 lpm (210 gpm)	1,022 lpm (270 gpm)	1,173 lpm (310 gpm)	2 (0)
19	Liquid Waste Treatment System		10 years, 24-hour storm	10 years, 24-hour storm	10 years, 24-hour storm	10 years, 24-hour storm	10 years, 24-hour storm	1 (0)

ACCOUNT 4 GASIFIER, ASU AND ACCESSORIES INCLUDING LOW TEMPERATURE HEAT RECOVERY

Equipment No.	Description	Type	Design Condition					Opr Qty. (Spares)
			D3A	D3B	D3C	D3D	D3E	
1	Gasifier	Pressurized slurry-feed, entrained bed	2,812 tonne/day, 5.6 MPa (3,100 tpd, 814.96 psia)	2,812 tonne/day, 5.6 MPa (3,100 tpd, 814.96 psia)	2,812 tonne/day, 5.6 MPa (3,100 tpd, 814.96 psia)	2,903 tonne/day, 5.6 MPa (3,200 tpd, 814.96 psia)	2,903 tonne/day, 5.6 MPa (3,200 tpd, 814.96 psia)	2 (0)
2	Synthesis Gas Cooler	Vertical downflow radiant heat exchanger with outlet quench chamber	243,126 kg/hr (536,000 lb/hr)	246,754 kg/hr (544,000 lb/hr)	249,929 kg/hr (551,000 lb/hr)	253,105 kg/hr (558,000 lb/hr)	255,373 kg/hr (563,000 lb/hr)	2 (0)
3	Synthesis Gas Cyclone	High efficiency	332,937 kg/hr (734,000 lb/hr) Design efficiency 90%	337,926 kg/hr (745,000 lb/hr) Design efficiency 90%	342,462 kg/hr (755,000 lb/hr) Design efficiency 90%	346,545 kg/hr (764,000 lb/hr) Design efficiency 90%	349,266 kg/hr (770,000 lb/hr) Design efficiency 90%	2 (0)
4	Candle Filter	Pressurized filter with pulse-jet cleaning	metallic filters	metallic filters	metallic filters	metallic filters	metallic filters	2 (0)
5	Syngas Scrubber Including Sour Water Stripper	Vertical upflow	332,937 kg/hr (734,000 lb/hr)	337,926 kg/hr (745,000 lb/hr)	342,462 kg/hr (755,000 lb/hr)	346,545 kg/hr (764,000 lb/hr)	349,266 kg/hr (770,000 lb/hr)	2 (0)
6	Raw Gas Coolers	Shell and tube with condensate drain	287,578 kg/hr (634,000 lb/hr)	322,504 kg/hr (711,000 lb/hr)	339,741 kg/hr (749,000 lb/hr)	356,977 kg/hr (787,000 lb/hr)	368,771 kg/hr (813,000 lb/hr)	8 (0)
7	Raw Gas Knockout Drum	Vertical with mist eliminator	213,642 kg/hr, 35°C, 5.2 MPa (471,000 lb/hr, 95°F, 750 psia)	239,950 kg/hr, 35°C, 5.2 MPa (529,000 lb/hr, 95°F, 750 psia)	261,723 kg/hr, 35°C, 5.2 MPa (577,000 lb/hr, 95°F, 750 psia)	283,949 kg/hr, 35°C, 5.2 MPa (626,000 lb/hr, 95°F, 750 psia)	298,917 kg/hr, 35°C, 5.2 MPa (659,000 lb/hr, 95°F, 750 psia)	2 (0)
8	Flare Stack	Self-supporting, carbon steel, stainless steel top, pilot ignition	332,937 kg/hr (734,000 lb/hr) syngas	337,926 kg/hr (745,000 lb/hr) syngas	342,462 kg/hr (755,000 lb/hr) syngas	346,545 kg/hr (764,000 lb/hr) syngas	349,266 kg/hr (770,000 lb/hr) syngas	2 (0)
9	ASU Main Air Compressor	Centrifugal, multi-stage	5,635 m^3/min @ 1.3 MPa (199,000 scfm @ 190 psia)	5,748 m^3/min @ 1.3 MPa (203,000 scfm @ 190 psia)	5,805 m^3/min @ 1.3 MPa (205,000 scfm @ 190 psia)	5,890 m^3/min @ 1.3 MPa (208,000 scfm @ 190 psia)	5,918 m^3/min @ 1.3 MPa (209,000 scfm @ 190 psia)	2 (0)
10	Cold Box	Vendor design	2,268 tonne/day (2,500 tpd) of 95% purity oxygen	2,268 tonne/day (2,500 tpd) of 95% purity oxygen	2,359 tonne/day (2,600 tpd) of 95% purity oxygen	2,359 tonne/day (2,600 tpd) of 95% purity oxygen	2,359 tonne/day (2,600 tpd) of 95% purity oxygen	2 (0)
11	Oxygen Compressor	Centrifugal, multi-stage	1,133 m^3/min (40,000 scfm) Suction - 0.9 MPa (130 psia) Discharge - 6.5 MPa (940 psia)	1,161 m^3/min (41,000 scfm) Suction - 0.9 MPa (130 psia) Discharge - 6.5 MPa (940 psia)	1,161 m^3/min (41,000 scfm) Suction - 0.9 MPa (130 psia) Discharge - 6.5 MPa (940 psia)	1,189 m^3/min (42,000 scfm) Suction - 0.9 MPa (130 psia) Discharge - 6.5 MPa (940 psia)	1,189 m^3/min (42,000 scfm) Suction - 0.9 MPa (130 psia) Discharge - 6.5 MPa (940 psia)	2 (0)
12	Primary Nitrogen Compressor	Centrifugal, multi-stage	3,540 m^3/min (125,000 scfm) Suction - 0.4 MPa (60 psia) Discharge - 2.7 MPa (390 psia)	3,625 m^3/min (128,000 scfm) Suction - 0.4 MPa (60 psia) Discharge - 2.7 MPa (390 psia)	3,653 m^3/min (129,000 scfm) Suction - 0.4 MPa (60 psia) Discharge - 2.7 MPa (390 psia)	3,710 m^3/min (131,000 scfm) Suction - 0.4 MPa (60 psia) Discharge - 2.7 MPa (390 psia)	3,738 m^3/min (132,000 scfm) Suction - 0.4 MPa (60 psia) Discharge - 2.7 MPa (390 psia)	2 (0)

Equipment No.	Description	Type	Design Condition					Opr Qty. (Spares)
			D3A	D3B	D3C	D3D	D3E	
13	Secondary Nitrogen Compressor	Centrifugal, single-stage	538 m^3/min (19,000 scfm) Suction - 1.2 MPa (180 psia) Discharge - 2.7 MPa (390 psia)	538 m^3/min (19,000 scfm) Suction - 1.2 MPa (180 psia) Discharge - 2.7 MPa (390 psia)	538 m^3/min (19,000 scfm) Suction - 1.2 MPa (180 psia) Discharge - 2.7 MPa (390 psia)	538 m^3/min (19,000 scfm) Suction - 1.2 MPa (180 psia) Discharge - 2.7 MPa (390 psia)	538 m^3/min (19,000 scfm) Suction - 1.2 MPa (180 psia) Discharge - 2.7 MPa (390 psia)	2 (0)
14	Syngas Dilution Nitrogen Boost Compressor	Centrifugal, single-stage	0 m^3/min (0 scfm) Suction - 2.6 MPa (380 psia) Discharge - 3.2 MPa (470 psia)	28 m^3/min (1,000 scfm) Suction - 2.6 MPa (380 psia) Discharge - 3.2 MPa (470 psia)	680 m^3/min (24,000 scfm) Suction - 2.6 MPa (380 psia) Discharge - 3.2 MPa (470 psia)	1,331 m^3/min (47,000 scfm) Suction - 2.6 MPa (380 psia) Discharge - 3.2 MPa (470 psia)	1,784 m^3/min (63,000 scfm) Suction - 2.6 MPa (380 psia) Discharge - 3.2 MPa (470 psia)	2 (0)

ACCOUNT 5A SYNGAS CLEANUP

Equipment No.	Description	Type	Design Condition					Opr Qty. (Spares)
			D3A	D3B	D3C	D3D	D3E	
1	Mercury Adsorber	Sulfated carbon bed	212,735 kg/hr (469,000 lb/hr) 35°C (95°F) 5.1 MPa (745 psia)	239,497 kg/hr (528,000 lb/hr) 35°C (95°F) 5.1 MPa (745 psia)	261,269 kg/hr (576,000 lb/hr) 35°C (95°F) 5.1 MPa (745 psia)	283,495 kg/hr (625,000 lb/hr) 35°C (95°F) 5.1 MPa (745 psia)	298,464 kg/hr (658,000 lb/hr) 35°C (95°F) 5.1 MPa (745 psia)	2 (0)
2	Sulfur Plant	Claus type	139 tonne/day (153 tpd)	141 tonne/day (155 tpd)	143 tonne/day (157 tpd)	144 tonne/day (159 tpd)	145 tonne/day (160 tpd)	1 (0)
3	Water Gas Shift Reactors	Fixed bed, catalytic	907 kg/hr (2,000 lb/hr) 210°C (410°F) 5.4 MPa (790 psia)	110,223 kg/hr (243,000 lb/hr) 221°C (430°F) 5.4 MPa (790 psia)	200,034 kg/hr (441,000 lb/hr) 221°C (430°F) 5.4 MPa (790 psia)	291,206 kg/hr (642,000 lb/hr) 221°C (430°F) 5.4 MPa (790 psia)	352,895 kg/hr (778,000 lb/hr) 221°C (430°F) 5.4 MPa (790 psia)	4 (0)
4	Shift Reactor Heat Recovery Exchangers	Shell and Tube	Exchanger 1: 00 GJ/hr (00 MMBtu/hr) Exchanger 2: 3 GJ/hr (3 MMBtu/hr)	Exchanger 1: 45 GJ/hr (42 MMBtu/hr) Exchanger 2: 3 GJ/hr (3 MMBtu/hr)	Exchanger 1: 81 GJ/hr (77 MMBtu/hr) Exchanger 2: 3 GJ/hr (3 MMBtu/hr)	Exchanger 1: 118 GJ/hr (112 MMBtu/hr) Exchanger 2: 3 GJ/hr (3 MMBtu/hr)	Exchanger 1: 143 GJ/hr (135 MMBtu/hr) Exchanger 2: 3 GJ/hr (3 MMBtu/hr)	4 (0)
5	COS Hydrolysis Reactor	Fixed bed, catalytic	300,732 kg/hr (663,000 lb/hr) 210°C (410°F) 5.4 MPa (790 psia)	212,281 kg/hr (468,000 lb/hr) 210°C (410°F) 5.4 MPa (790 psia)	139,253 kg/hr (307,000 lb/hr) 210°C (410°F) 5.4 MPa (790 psia)	65,771 kg/hr (145,000 lb/hr) 210°C (410°F) 5.4 MPa (790 psia)	15,876 kg/hr (35,000 lb/hr) 210°C (410°F) 5.4 MPa (790 psia)	2 (0)
6	Acid Gas Removal Plant	Two-stage Selexol	214,549 kg/hr (473,000 lb/hr) 35°C (95°F) 5.1 MPa (740 psia)	240,858 kg/hr (531,000 lb/hr) 35°C (95°F) 5.1 MPa (740 psia)	262,630 kg/hr (579,000 lb/hr) 35°C (95°F) 5.1 MPa (740 psia)	284,856 kg/hr (628,000 lb/hr) 35°C (95°F) 5.1 MPa (740 psia)	300,278 kg/hr (662,000 lb/hr) 35°C (95°F) 5.1 MPa (740 psia)	2 (0)
7	Hydrogenation Reactor	Fixed bed, catalytic	6,347 kg/hr (13,992 lb/hr) 232°C (450°F) 0.1 MPa (12.3 psia)	6,104 kg/hr (13,457 lb/hr) 232°C (450°F) 0.1 MPa (12.3 psia)	5,915 kg/hr (13,039 lb/hr) 232°C (450°F) 0.1 MPa (12.3 psia)	6,798 kg/hr (14,988 lb/hr) 232°C (450°F) 0.1 MPa (12.3 psia)	7,423 kg/hr (16,364 lb/hr) 232°C (450°F) 0.1 MPa (12.3 psia)	1 (0)
8	Tail Gas Recycle Compressor	Centrifugal	3,059 kg/hr (6,744 lb/hr)	2,514 kg/hr (5,543 lb/hr)	2,073 kg/hr (4,570 lb/hr)	2,784 kg/hr (6,138 lb/hr)	3,281 kg/hr (7,233 lb/hr)	1 (0)

ACCOUNT 5B CO_2 COMPRESSION

Equipment No.	Description	Type	Design Condition					Opr Qty. (Spares)
			D3A	D3B	D3C	D3D	D3E	
1	CO_2 Compressor	Integrally geared, multi-stage centrifugal	303 m^3/min @ 15.3 MPa (10,700 scfm @ 2,215 psia)	544 m^3/min @ 15.3 MPa (19,200 scfm @ 2,215 psia)	736 m^3/min @ 15.3 MPa (26,000 scfm @ 2,215 psia)	929 m^3/min @ 15.3 MPa (32,800 scfm @ 2,215 psia)	1,062 m^3/min @ 15.3 MPa (37,500 scfm @ 2,215 psia)	4 (0)

ACCOUNT 6 COMBUSTION TURBINE AND AUXILIARIES

Equipment No.	Description	Type	Design Condition					Opr Qty. (Spares)
			D3A	D3B	D3C	D3D	D3E	
1	Gas Turbine	Advanced F class	230 MW	230 MW	230 MW	230 MW	230 MW	2 (0)
2	Gas Turbine Generator	TEWAC	260 MVA @ 0.9 p.f., 24 kV, 60 Hz, 3-phase	260 MVA @ 0.9 p.f., 24 kV, 60 Hz, 3-phase	260 MVA @ 0.9 p.f., 24 kV, 60 Hz, 3-phase	260 MVA @ 0.9 p.f., 24 kV, 60 Hz, 3-phase	260 MVA @ 0.9 p.f., 24 kV, 60 Hz, 3-phase	2 (0)
3	Syngas Expansion Turbine/Generator	Turbo Expander	144,378 kg/h (318,300 lb/h) 5.0 MPa (720 psia) Inlet 3.2 MPa (460 psia) Outlet	116,800 kg/h (257,500 lb/h) 5.0 MPa (720 psia) Inlet 3.2 MPa (460 psia) Outlet	95,935 kg/h (211,500 lb/h) 5.0 MPa (720 psia) Inlet 3.2 MPa (460 psia) Outlet	74,344 kg/h (163,900 lb/h) 5.0 MPa (720 psia) Inlet 3.2 MPa (460 psia) Outlet	59,693 kg/h (131,600 lb/h) 5.0 MPa (720 psia) Inlet 3.2 MPa (460 psia) Outlet	2 (0)

ACCOUNT 7 HRSG, DUCTING, AND STACK

Equipment No.	Description	Type	Design Condition					Opr Qty. (Spares)
			D3A	D3B	D3C	D3D	D3E	
1	Stack	CS plate, type 409SS liner	76 m (250 ft) high x 8.4 m (28 ft) diameter	76 m (250 ft) high x 8.4 m (28 ft) diameter	76 m (250 ft) high x 8.4 m (28 ft) diameter	76 m (250 ft) high x 8.4 m (28 ft) diameter	76 m (250 ft) high x 8.5 m (28 ft) diameter	1 (0)
2	Heat Recovery Steam Generator	Drum, multi-pressure with economizer section and integral deaerator	Main steam - 346,899 kg/hr, 12.4 MPa/554°C (764,782 lb/hr, 1,800 psig/1,029°F) Reheat steam - 346,477 kg/hr, 3.1 MPa/554°C (763,852 lb/hr, 452 psig/1,029°F)	Main steam - 346,705 kg/hr, 12.4 MPa/548°C (764,354 lb/hr, 1,800 psig/1,019°F) Reheat steam - 340,285 kg/hr, 3.1 MPa/548°C (750,200 lb/hr, 452 psig/1,019°F)	Main steam - 344,019 kg/hr, 12.4 MPa/544°C (758,433 lb/hr, 1,800 psig/1,011°F) Reheat steam - 342,563 kg/hr, 3.1 MPa/544°C (755,223 lb/hr, 452 psig/1,011°F)	Main steam - 341,230 kg/hr, 12.4 MPa/539°C (752,283 lb/hr, 1,800 psig/1,002°F) Reheat steam - 344,795 kg/hr, 3.1 MPa/539°C (760,143 lb/hr, 452 psig/1,002°F)	Main steam - 339,379 kg/hr, 12.4 MPa/536°C (748,203 lb/hr, 1,800 psig/997°F) Reheat steam - 346,307 kg/hr, 3.1 MPa/536°C (763,477 lb/hr, 452 psig/997°F)	2 (0)

ACCOUNT 8 STEAM TURBINE GENERATOR AND AUXILIARIES

Equipment No.	Description	Type	Design Condition					Opr Qty. (Spares)
			D3A	D3B	D3C	D3D	D3E	
1	Steam Turbine	Commercially available advanced steam turbine	295 MW 12.4 MPa/554°C/554°C (1,800 psig/ 1029°F/1029°F)	291 MW 12.4 MPa/548°C/548°C (1,800 psig/ 1019°F/1019°F)	289 MW 12.4 MPa/544°C/544°C (1,800 psig/ 1011°F/1011°F)	286 MW 12.4 MPa/539°C/539°C (1,800 psig/ 1002°F/1002°F)	284 MW 12.4 MPa/536°C/536°C (1,800 psig/ 997°F/997°F)	1 (0)
2	Steam Turbine Generator	Hydrogen cooled, static excitation	330 MVA @ 0.9 p.f., 24 kV, 60 Hz, 3-phase	320 MVA @ 0.9 p.f., 24 kV, 60 Hz, 3-phase	320 MVA @ 0.9 p.f., 24 kV, 60 Hz, 3-phase	320 MVA @ 0.9 p.f., 24 kV, 60 Hz, 3-phase	320 MVA @ 0.9 p.f., 24 kV, 60 Hz, 3-phase	1 (0)
3	Steam Bypass	One per HRSG	50% steam flow @ design steam conditions	50% steam flow @ design steam conditions	50% steam flow @ design steam conditions	50% steam flow @ design steam conditions	50% steam flow @ design steam conditions	2 (0)
4	Surface Condenser	Single pass, divided waterbox including vacuum pumps	1,783 GJ/hr (1,690 MMBtu/hr), Inlet water temperature 16°C (60°F), Water temperature rise 11°C (20°F)	1,772 GJ/hr (1,680 MMBtu/hr), Inlet water temperature 16°C (60°F), Water temperature rise 11°C (20°F)	1,751 GJ/hr (1,660 MMBtu/hr), Inlet water temperature 16°C (60°F), Water temperature rise 11°C (20°F)	1,730 GJ/hr (1,640 MMBtu/hr), Inlet water temperature 16°C (60°F), Water temperature rise 11°C (20°F)	1,709 GJ/hr (1,620 MMBtu/hr), Inlet water temperature 16°C (60°F), Water temperature rise 11°C (20°F)	1 (0)

ACCOUNT 9 COOLING WATER SYSTEM

Equipment No.	Description	Type	Design Condition					Opr Qty. (Spares)
			D3A	D3B	D3C	D3D	D3E	
1	Circulating Water Pumps	Vertical, wet pit	416,395 lpm @ 30 m (110,000 gpm @ 100 ft)	431,537 lpm @ 30 m (114,000 gpm @ 100 ft)	442,893 lpm @ 30 m (117,000 gpm @ 100 ft)	454,249 lpm @ 30 m (120,000 gpm @ 100 ft)	461,820 lpm @ 30 m (122,000 gpm @ 100 ft)	2 (1)
2	Cooling Tower	Evaporative, mechanical draft, multi-cell	11°C (51.5°F) wet bulb / 16°C (60°F) CWT / 27°C (80°F) HWT / 2,332 GJ/hr (2,210 MMBtu/hr) heat duty	11°C (51.5°F) wet bulb / 16°C (60°F) CWT / 27°C (80°F) HWT / 2,416 GJ/hr (2,290 MMBtu/hr) heat duty	11°C (51.5°F) wet bulb / 16°C (60°F) CWT / 27°C (80°F) HWT / 2,479 GJ/hr (2,350 MMBtu/hr) heat duty	11°C (51.5°F) wet bulb / 16°C (60°F) CWT / 27°C (80°F) HWT / 2,532 GJ/hr (2,400 MMBtu/hr) heat duty	11°C (51.5°F) wet bulb / 16°C (60°F) CWT / 27°C (80°F) HWT / 2,574 GJ/hr (2,440 MMBtu/hr) heat duty	1 (0)

ACCOUNT 10 SLAG RECOVERY AND HANDLING

Equipment No.	Description	Type	Design Condition					Opr Qty. (Spares)
			D3A	D3B	D3C	D3D	D3E	
1	Slag Quench Tank	Water bath	242,266 liters (64,000 gal)	246,052 liters (65,000 gal)	249,837 liters (66,000 gal)	249,837 liters (66,000 gal)	253,623 liters (67,000 gal)	2 (0)
2	Slag Crusher	Roll	13 tonne/hr (14 tph)	13 tonne/hr (14 tph)	13 tonne/hr (14 tph)	14 tonne/hr (15 tph)	14 tonne/hr (15 tph)	2 (0)
3	Slag Depressurizer	Lock Hopper	13 tonne/hr (14 tph)	13 tonne/hr (14 tph)	13 tonne/hr (14 tph)	14 tonne/hr (15 tph)	14 tonne/hr (15 tph)	2 (0)
4	Slag Receiving Tank	Horizontal, weir	143,846 liters (38,000 gal)	147,631 liters (39,000 gal)	151,416 liters (40,000 gal)	151,416 liters (40,000 gal)	151,416 liters (40,000 gal)	2 (0)
5	Black Water Overflow Tank	Shop fabricated	64,352 liters (17,000 gal)	68,137 liters (18,000 gal)	68,137 liters (18,000 gal)	68,137 liters (18,000 gal)	68,137 liters (18,000 gal)	2 (0)
6	Slag Conveyor	Drag chain	13 tonne/hr (14 tph)	13 tonne/hr (14 tph)	13 tonne/hr (14 tph)	14 tonne/hr (15 tph)	14 tonne/hr (15 tph)	2 (0)
7	Slag Separation Screen	Vibrating	13 tonne/hr (14 tph)	13 tonne/hr (14 tph)	13 tonne/hr (14 tph)	14 tonne/hr (15 tph)	14 tonne/hr (15 tph)	2 (0)
8	Coarse Slag Conveyor	Belt/bucket	13 tonne/hr (14 tph)	13 tonne/hr (14 tph)	13 tonne/hr (14 tph)	14 tonne/hr (15 tph)	14 tonne/hr (15 tph)	2 (0)
9	Fine Ash Settling Tank	Vertical, gravity	208,198 liters (55,000 gal)	208,198 liters (55,000 gal)	211,983 liters (56,000 gal)	215,768 liters (57,000 gal)	215,768 liters (57,000 gal)	2 (0)
10	Fine Ash Recycle Pumps	Horizontal centrifugal	38 lpm @ 14 m H_2O (10 gpm @ 46 ft H_2O)	38 lpm @ 14 m H_2O (10 gpm @ 46 ft H_2O)	38 lpm @ 14 m H_2O (10 gpm @ 46 ft H_2O)	38 lpm @ 14 m H_2O (10 gpm @ 46 ft H_2O)	38 lpm @ 14 m H_2O (10 gpm @ 46 ft H_2O)	2 (2)
11	Grey Water Storage Tank	Field erected	64,352 liters (17,000 gal)	68,137 liters (18,000 gal)	68,137 liters (18,000 gal)	68,137 liters (18,000 gal)	68,137 liters (18,000 gal)	2 (0)
12	Grey Water Pumps	Centrifugal	227 lpm @ 564 m H_2O (60 gpm @ 1,850 ft H_2O)	227 lpm @ 564 m H_2O (60 gpm @ 1,850 ft H_2O)	227 lpm @ 564 m H_2O (60 gpm @ 1,850 ft H_2O)	227 lpm @ 564 m H_2O (60 gpm @ 1,850 ft H_2O)	227 lpm @ 564 m H_2O (60 gpm @ 1,850 ft H_2O)	2 (2)
13	Slag Storage Bin	Vertical, field erected	907 tonne (1,000 tons)	907 tonne (1,000 tons)	907 tonne (1,000 tons)	907 tonne (1,000 tons)	998 tonne (1,100 tons)	2 (0)
14	Unloading Equipment	Telescoping chute	109 tonne/hr (120 tph)	109 tonne/hr (120 tph)	109 tonne/hr (120 tph)	109 tonne/hr (120 tph)	109 tonne/hr (120 tph)	1 (0)

ACCOUNT 11 ACCESSORY ELECTRIC PLANT

Equipment No.	Description	Type	Design Condition					Opr Qty. (Spares)
			D3A	D3B	D3C	D3D	D3E	
1	CTG Step-up Transformer	Oil-filled	24 kV/345 kV, 260 MVA, 3-ph, 60 Hz	24 kV/345 kV, 260 MVA, 3-ph, 60 Hz	24 kV/345 kV, 260 MVA, 3-ph, 60 Hz	24 kV/345 kV, 260 MVA, 3-ph, 60 Hz	24 kV/345 kV, 260 MVA, 3-ph, 60 Hz	2 (0)
2	STG Step-up Transformer	Oil-filled	24 kV/345 kV, 330 MVA, 3-ph, 60 Hz	24 kV/345 kV, 320 MVA, 3-ph, 60 Hz	24 kV/345 kV, 320 MVA, 3-ph, 60 Hz	24 kV/345 kV, 320 MVA, 3-ph, 60 Hz	24 kV/345 kV, 320 MVA, 3-ph, 60 Hz	1 (0)
3	High Voltage Auxiliary Transformer	Oil-filled	345 kV/13.8 kV, 63 MVA, 3-ph, 60 Hz	345 kV/13.8 kV, 68 MVA, 3-ph, 60 Hz	345 kV/13.8 kV, 72 MVA, 3-ph, 60 Hz	345 kV/13.8 kV, 76 MVA, 3-ph, 60 Hz	345 kV/13.8 kV, 79 MVA, 3-ph, 60 Hz	2 (0)
4	Medium Voltage Auxiliary Transformer	Oil-filled	24 kV/4.16 kV, 30 MVA, 3-ph, 60 Hz	24 kV/4.16 kV, 34 MVA, 3-ph, 60 Hz	24 kV/4.16 kV, 38 MVA, 3-ph, 60 Hz	24 kV/4.16 kV, 42 MVA, 3-ph, 60 Hz	24 kV/4.16 kV, 45 MVA, 3-ph, 60 Hz	1 (1)
5	Low Voltage Transformer	Dry ventilated	4.16 kV/480 V, 4 MVA, 3-ph, 60 Hz	4.16 kV/480 V, 5 MVA, 3-ph, 60 Hz	4.16 kV/480 V, 6 MVA, 3-ph, 60 Hz	4.16 kV/480 V, 6 MVA, 3-ph, 60 Hz	4.16 kV/480 V, 7 MVA, 3-ph, 60 Hz	1 (1)
6	CTG Isolated Phase Bus Duct and Tap Bus	Aluminum, self-cooled	24 kV, 3-ph, 60 Hz	24 kV, 3-ph, 60 Hz	24 kV, 3-ph, 60 Hz	24 kV, 3-ph, 60 Hz	24 kV, 3-ph, 60 Hz	2 (0)
7	STG Isolated Phase Bus Duct and Tap Bus	Aluminum, self-cooled	24 kV, 3-ph, 60 Hz	24 kV, 3-ph, 60 Hz	24 kV, 3-ph, 60 Hz	24 kV, 3-ph, 60 Hz	24 kV, 3-ph, 60 Hz	1 (0)
8	Medium Voltage Switchgear	Metal clad	4.16 kV, 3-ph, 60 Hz	4.16 kV, 3-ph, 60 Hz	4.16 kV, 3-ph, 60 Hz	4.16 kV, 3-ph, 60 Hz	4.16 kV, 3-ph, 60 Hz	1 (1)
9	Low Voltage Switchgear	Metal enclosed	480 V, 3-ph, 60 Hz	480 V, 3-ph, 60 Hz	480 V, 3-ph, 60 Hz	480 V, 3-ph, 60 Hz	480 V, 3-ph, 60 Hz	1 (1)
10	Emergency Diesel Generator	Sized for emergency shutdown	750 kW, 480 V, 3-ph, 60 Hz	750 kW, 480 V, 3-ph, 60 Hz	750 kW, 480 V, 3-ph, 60 Hz	750 kW, 480 V, 3-ph, 60 Hz	750 kW, 480 V, 3-ph, 60 Hz	1 (0)

ACCOUNT 12 INSTRUMENTATION AND CONTROL

Equipment No.	Description	Type	Design Condition					Opr Qty. (Spares)
			D3A	D3B	D3C	D3D	D3E	
1	DCS - Main Control	Monitor/keyboard; Operator printer (laser color); Engineering printer (laser B&W)	Operator stations/printers and engineering stations/printers	Operator stations/printers and engineering stations/printers	Operator stations/printers and engineering stations/printers	Operator stations/printers and engineering stations/printers	Operator stations/printers and engineering stations/printers	1 (0)
2	DCS - Processor	Microprocessor with redundant input/output	N/A	N/A	N/A	N/A	N/A	1 (0)
3	DCS - Data Highway	Fiber optic	Fully redundant, 25% spare	Fully redundant, 25% spare	Fully redundant, 25% spare	Fully redundant, 25% spare	Fully redundant, 25% spare	1 (0)

This page intentionally left blank

4.3.4 IGCC Design 4 – Two Water Gas Shift Reactors Without Bypass

A process block flow diagram for Case 2 Design 4 (D4) is shown in Exhibit 4-108. D4 represents an IGCC plant with two WGS reactors and no bypass stream, which maximizes total CO_2 capture. This IGCC design uses a S:DG molar ratio of 0.3 at the outlet of the second WGS reactor. To achieve greater than 90 percent CO_2 removal, the two-stage Selexol™ CO_2 removal efficiency is increased by raising the solvent circulation rate, which increases the size and cost of the Selexol™ system. According to UOP, two-stage Selexol™ systems have been designed for up to 97 percent CO_2 recovery and this level of control was deemed the maximum for this study [57]. D4 does not include a COS hydrolysis unit since the entire syngas stream passes through two WGS reactors.

Three levels of total CO_2 removal were modeled for Case 2 D4: 90 percent (D4A), 95 percent (D4B), and 97 percent (D4C). The corresponding stream tables are contained in Exhibit 4-109, Exhibit 4-110, and Exhibit 4-111, respectively.

Overall performance for Case 2 D4 is summarized in Exhibit 4-112 which includes auxiliary power requirements. Note that the coal feed rate remains essentially constant at CO_2 capture levels of 90 percent and higher, but a small decrease (~0.2 percent) is observed. This anomaly can be explained by a significant increase in the quantity of nitrogen sent to the CT for dilution and temperature control. The excess nitrogen increases the total mass flow to the CT, which leads to a CT power output greater than 464 MW. As a result, the Aspen model reduces the coal feed rate slightly to maintain a CT gross power output of 464 MW (based on two turbines) since an advanced F Class turbine is designed for a gross output of 232 MW. However, as expected, the net power output and net plant efficiency decrease as the CO_2 capture level increases.

Material and energy balance information, environmental performance and a major equipment list are summarized in Sections 4.3.4.1 and 4.3.4.2.

Exhibit 4-108 Case 2 D4 Process Block Flow Diagram, IGCC with Two WGS Reactors

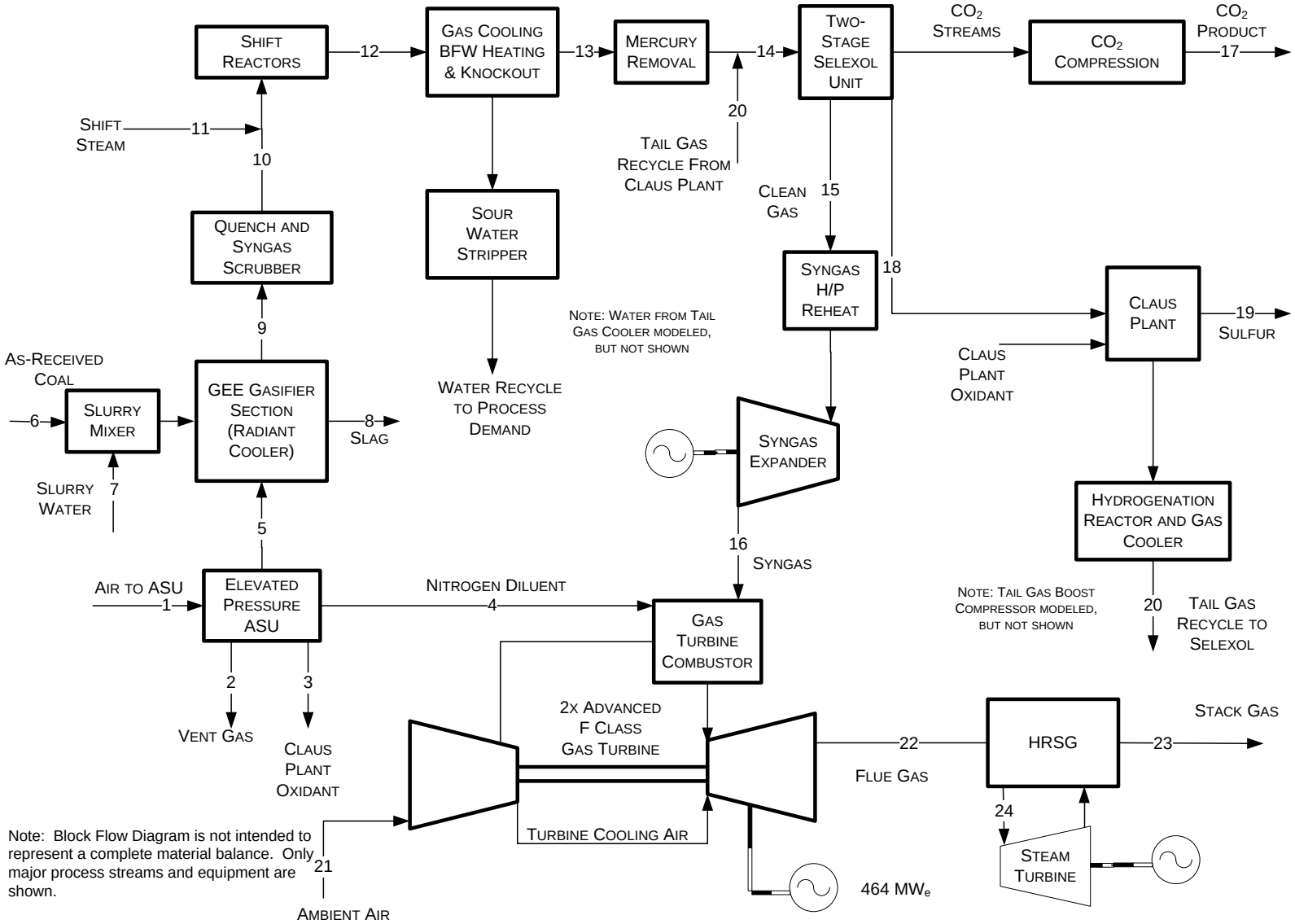

Exhibit 4-109 Case 2 D4A Stream Table, 90% CO_2 Removal

	1	2	3	4	5	6	7	8	9	10	11	12
V-L Mole Fraction												
Ar	0.0092	0.0165	0.0318	0.0023	0.0318	0.0000	0.0000	0.0000	0.0086	0.0068	0.0000	0.0054
CH_4	0.0000	0.0000	0.0000	0.0000	0.0000	0.0000	0.0000	0.0000	0.0011	0.0009	0.0000	0.0007
CO	0.0000	0.0000	0.0000	0.0000	0.0000	0.0000	0.0000	0.0000	0.3576	0.2823	0.0000	0.0060
CO_2	0.0003	0.0054	0.0000	0.0000	0.0000	0.0000	0.0000	0.0000	0.1380	0.1089	0.0000	0.3082
COS	0.0000	0.0000	0.0000	0.0000	0.0000	0.0000	0.0000	0.0000	0.0002	0.0001	0.0000	0.0000
H_2	0.0000	0.0000	0.0000	0.0000	0.0000	0.0000	0.0000	0.0000	0.3406	0.2689	0.0000	0.4366
H_2O	0.0099	0.1356	0.0000	0.0003	0.0000	0.0000	0.9995	0.0000	0.1369	0.3190	1.0000	0.2325
HCl	0.0000	0.0000	0.0000	0.0000	0.0000	0.0000	0.0000	0.0000	0.0008	0.0002	0.0000	0.0001
H_2S	0.0000	0.0000	0.0000	0.0000	0.0000	0.0000	0.0000	0.0000	0.0073	0.0057	0.0000	0.0047
N_2	0.7732	0.7074	0.0178	0.9920	0.0178	0.0000	0.0000	0.0000	0.0070	0.0055	0.0000	0.0044
NH_3	0.0000	0.0000	0.0000	0.0000	0.0000	0.0000	0.0005	0.0000	0.0019	0.0016	0.0000	0.0013
O_2	0.2074	0.1350	0.9504	0.0054	0.9504	0.0000	0.0000	0.0000	0.0000	0.0000	0.0000	0.0000
SO_2	0.0000	0.0000	0.0000	0.0000	0.0000	0.0000	0.0000	0.0000	0.0000	0.0000	0.0000	0.0000
Total	1.0000	1.0000	1.0000	1.0000	1.0000	0.0000	1.0000	0.0000	1.0000	1.0000	1.0000	1.0000
V-L Flowrate (kg_{mol}/hr)	27,374	1,659	98	20,052	5,526	0	5,038	0	23,123	29,287	7,192	36,479
V-L Flowrate (kg/hr)	789,924	45,576	3,158	562,651	177,833	0	90,750	0	465,257	576,023	129,569	705,592
Solids Flowrate (kg/hr)	0	0	0	0	0	220,911	0	24,238	0	0	0	0
Temperature (°C)	15	18	32	93	32	15	142	1,316	677	206	288	240
Pressure (MPa, abs)	0.10	0.11	0.86	2.65	0.86	0.10	5.79	5.62	5.55	5.52	5.52	5.41
Enthalpy (kJ/kg)[A]	30.23	35.63	26.67	92.50	26.67	---	537.77	---	1,424.65	1,065.78	2,918.18	942.21
Density (kg/m^3)	1.2	1.5	11.0	24.4	11.0	---	872.0	---	14.0	27.2	25.6	24.8
V-L Molecular Weight	28.857	27.479	32.181	28.060	32.181	---	18.015	---	20.121	19.669	18.015	19.343
V-L Flowrate (lb_{mol}/hr)	60,349	3,657	216	44,207	12,183	0	11,106	0	50,977	64,566	15,856	80,422
V-L Flowrate (lb/hr)	1,741,483	100,477	6,963	1,240,434	392,056	0	200,070	0	1,025,716	1,269,913	285,651	1,555,564
Solids Flowrate (lb/hr)	0	0	0	0	0	487,026	0	53,435	0	0	0	0
Temperature (°F)	59	65	90	199	90	59	287	2,400	1,250	403	550	463
Pressure (psia)	14.7	16.4	125.0	384.0	125.0	14.7	840.0	815.0	805.0	800.0	800.0	785.0
Enthalpy (Btu/lb)[A]	13.0	15.3	11.5	39.8	11.5	---	231.2	---	612.5	458.2	1,254.6	405.1
Density (lb/ft^3)	0.076	0.091	0.687	1.521	0.687	---	54.440	---	0.871	1.699	1.597	1.550

A - Reference conditions are 32.02 F & 0.089 PSIA

Exhibit 4-109 Case 2 D4A Stream Table, 90% CO2 Removal (continued)

	13	14	15	16	17	18	19	20	21	22	23	24
V-L Mole Fraction												
Ar	0.0071	0.0071	0.0115	0.0115	0.0002	0.0018	0.0000	0.0106	0.0092	0.0091	0.0091	0.0000
CH_4	0.0009	0.0009	0.0015	0.0015	0.0000	0.0004	0.0000	0.0000	0.0000	0.0000	0.0000	0.0000
CO	0.0078	0.0077	0.0124	0.0124	0.0002	0.0022	0.0000	0.0060	0.0000	0.0000	0.0000	0.0000
CO_2	0.4019	0.4056	0.0502	0.0502	0.9948	0.5215	0.0000	0.6744	0.0003	0.0083	0.0083	0.0000
COS	0.0000	0.0000	0.0000	0.0000	0.0000	0.0002	0.0000	0.0000	0.0000	0.0000	0.0000	0.0000
H_2	0.5692	0.5648	0.9139	0.9139	0.0048	0.1028	0.0000	0.2474	0.0000	0.0000	0.0000	0.0000
H_2O	0.0012	0.0013	0.0001	0.0001	0.0000	0.0226	0.0000	0.0017	0.0099	0.1222	0.1222	1.0000
HCl	0.0000	0.0000	0.0000	0.0000	0.0000	0.0000	0.0000	0.0000	0.0000	0.0000	0.0000	0.0000
H_2S	0.0061	0.0061	0.0000	0.0000	0.0000	0.3477	0.0000	0.0050	0.0000	0.0000	0.0000	0.0000
N_2	0.0058	0.0065	0.0105	0.0105	0.0000	0.0008	0.0000	0.0549	0.7732	0.7541	0.7541	0.0000
NH_3	0.0000	0.0000	0.0000	0.0000	0.0000	0.0000	0.0000	0.0000	0.0000	0.0000	0.0000	0.0000
O_2	0.0000	0.0000	0.0000	0.0000	0.0000	0.0000	0.0000	0.0000	0.2074	0.1064	0.1064	0.0000
SO_2	0.0000	0.0000	0.0000	0.0000	0.0000	0.0000	0.0000	0.0000	0.0000	0.0000	0.0000	0.0000
Total	1.0000	1.0000	1.0000	1.0000	1.0000	1.0000	0.0000	1.0000	1.0000	1.0000	1.0000	1.0000
V-L Flowrate (kg_{mol}/hr)	27,979	28,364	17,419	17,419	10,425	497	0	385	110,253	139,656	139,656	34,499
V-L Flowrate (kg/hr)	552,408	564,934	90,173	90,173	456,670	17,684	0	12,527	3,181,557	3,834,382	3,834,382	621,516
Solids Flowrate (kg/hr)	0	0	0	0	0	0	5,524	0	0	0	0	0
Temperature (°C)	35	35	35	198	51	48	180	38	15	562	132	534
Pressure (MPa, abs)	5.14	5.1	4.999	3.172	15.270	0.163	0.119	5.512	0.101	0.105	0.105	12.512
Enthalpy (kJ/kg)[A]	37.11	36.4	195.466	1,134.797	-162.309	74.861	---	4.442	30.227	834.702	343.768	3,432.882
Density (kg/m^3)	40.7	40.9	9.9	4.1	641.8	2.2	5,275.4	79.1	1.2	0.4	0.9	36.7
V-L Molecular Weight	19.744	20	5.177	5.177	43.805	35.589	---	32.508	28.857	27.456	27.456	18.015
V-L Flowrate (lb_{mol}/hr)	61,683	62,532	38,403	38,403	22,984	1,095	0	850	243,066	307,890	307,890	76,058
V-L Flowrate (lb/hr)	1,217,850	1,245,467	198,798	198,798	1,006,784	38,986	0	27,617	7,014,133	8,453,366	8,453,366	1,370,208
Solids Flowrate (lb/hr)	0	0	0	0	0	0	12,178	0	0	0	0	0
Temperature (°F)	95	95	95	388	124	119	356	100	59	1,044	270	994
Pressure (psia)	745.0	740.0	725.0	460.0	2,214.7	23.7	17.3	799.5	14.7	15.2	15.2	1,814.7
Enthalpy (Btu/lb)[A]	16.0	15.6	84.0	487.9	-69.8	32.2	---	1.9	13.0	358.9	147.8	1,475.9
Density (lb/ft^3)	2.544	3	0.618	0.259	40.069	0.137	329.335	4.938	0.076	0.026	0.053	2.293

A - Reference conditions are 32.02 F & 0.089 PSIA

Exhibit 4-110 Case 2 D4B Stream Table, 95% CO_2 Capture

	1	2	3	4	5	6	7	8	9	10	11	12
V-L Mole Fraction												
Ar	0.0092	0.0264	0.0318	0.0023	0.0318	0.0000	0.0000	0.0000	0.0086	0.0068	0.0000	0.0054
CH_4	0.0000	0.0000	0.0000	0.0000	0.0000	0.0000	0.0000	0.0000	0.0011	0.0009	0.0000	0.0007
CO	0.0000	0.0000	0.0000	0.0000	0.0000	0.0000	0.0000	0.0000	0.3576	0.2818	0.0000	0.0060
CO_2	0.0003	0.0092	0.0000	0.0000	0.0000	0.0000	0.0000	0.0000	0.1380	0.1087	0.0000	0.3082
COS	0.0000	0.0000	0.0000	0.0000	0.0000	0.0000	0.0000	0.0000	0.0002	0.0001	0.0000	0.0000
H_2	0.0000	0.0000	0.0000	0.0000	0.0000	0.0000	0.0000	0.0000	0.3406	0.2684	0.0000	0.4366
H_2O	0.0099	0.2316	0.0000	0.0003	0.0000	0.0000	0.9995	0.0000	0.1369	0.3203	1.0000	0.2325
HCl	0.0000	0.0000	0.0000	0.0000	0.0000	0.0000	0.0000	0.0000	0.0008	0.0002	0.0000	0.0001
H_2S	0.0000	0.0000	0.0000	0.0000	0.0000	0.0000	0.0000	0.0000	0.0073	0.0057	0.0000	0.0047
N_2	0.7732	0.5064	0.0178	0.9919	0.0178	0.0000	0.0000	0.0000	0.0070	0.0055	0.0000	0.0044
NH_3	0.0000	0.0000	0.0000	0.0000	0.0000	0.0000	0.0005	0.0000	0.0019	0.0016	0.0000	0.0013
O_2	0.2074	0.2264	0.9504	0.0054	0.9504	0.0000	0.0000	0.0000	0.0000	0.0000	0.0000	0.0000
SO_2	0.0000	0.0000	0.0000	0.0000	0.0000	0.0000	0.0000	0.0000	0.0000	0.0000	0.0000	0.0000
Total	1.0000	1.0000	1.0000	1.0000	1.0000	0.0000	1.0000	0.0000	1.0000	1.0000	1.0000	1.0000
V-L Flowrate (kg_{mol}/hr)	27,345	969	102	20,718	5,516	0	5,029	0	23,082	29,288	7,127	36,415
V-L Flowrate (kg/hr)	789,090	26,226	3,280	581,359	177,521	0	90,591	0	464,438	575,969	128,386	704,355
Solids Flowrate (kg/hr)	0	0	0	0	0	220,522	0	24,195	0	0	0	0
Temperature (°C)	15	21	32	93	32	15	142	1,316	677	206	288	240
Pressure (MPa, abs)	0.10	0.11	0.86	2.65	0.86	0.10	5.79	5.62	5.55	5.52	5.52	5.41
Enthalpy (kJ/kg)[A]	30.23	37.59	26.67	92.51	26.67	---	537.77	---	1,424.65	1,069.11	2,918.18	942.19
Density (kg/m^3)	1.2	1.6	11.0	24.4	11.0	---	872.0	---	14.0	27.2	25.6	24.8
V-L Molecular Weight	28.857	27.062	32.181	28.060	32.181	---	18.015	---	20.121	19.666	18.015	19.343
V-L Flowrate (lb_{mol}/hr)	60,285	2,137	225	45,676	12,161	0	11,086	0	50,888	64,569	15,711	80,281
V-L Flowrate (lb/hr)	1,739,646	57,819	7,231	1,281,677	391,366	0	199,718	0	1,023,911	1,269,794	283,043	1,552,837
Solids Flowrate (lb/hr)	0	0	0	0	0	486,169	0	53,341	0	0	0	0
Temperature (°F)	59	70	90	199	90	59	287	2,400	1,250	403	550	463
Pressure (psia)	14.7	16.4	125.0	384.0	125.0	14.7	840.0	815.0	805.0	800.0	800.0	785.0
Enthalpy (Btu/lb)[A]	13.0	16.2	11.5	39.8	11.5	---	231.2	---	612.5	459.6	1,254.6	405.1
Density (lb/ft^3)	0.076	0.100	0.687	1.521	0.687	---	54.440	---	0.871	1.698	1.597	1.550

A - Reference conditions are 32.02 F & 0.089 PSIA

Exhibit 4-110 Case 2 D4B Stream Table, 95% CO2 Capture (continued)

	13	14	15	16	17	18	19	20	21	22	23	24
V-L Mole Fraction												
Ar	0.0071	0.0070	0.0119	0.0119	0.0002	0.0008	0.0000	0.0043	0.0092	0.0091	0.0091	0.0000
CH_4	0.0009	0.0009	0.0015	0.0015	0.0000	0.0002	0.0000	0.0000	0.0000	0.0000	0.0000	0.0000
CO	0.0078	0.0077	0.0131	0.0131	0.0002	0.0010	0.0000	0.0065	0.0000	0.0000	0.0000	0.0000
CO_2	0.4019	0.4180	0.0194	0.0194	0.9950	0.7832	0.0000	0.8771	0.0003	0.0043	0.0043	0.0000
COS	0.0000	0.0000	0.0000	0.0000	0.0000	0.0001	0.0000	0.0000	0.0000	0.0000	0.0000	0.0000
H_2	0.5692	0.5527	0.9432	0.9432	0.0045	0.0462	0.0000	0.0851	0.0000	0.0000	0.0000	0.0000
H_2O	0.0012	0.0013	0.0001	0.0001	0.0000	0.0105	0.0000	0.0019	0.0099	0.1218	0.1218	1.0000
HCl	0.0000	0.0000	0.0000	0.0000	0.0000	0.0000	0.0000	0.0000	0.0000	0.0000	0.0000	0.0000
H_2S	0.0061	0.0060	0.0000	0.0000	0.0000	0.1576	0.0000	0.0035	0.0000	0.0000	0.0000	0.0000
N_2	0.0058	0.0063	0.0108	0.0108	0.0000	0.0003	0.0000	0.0216	0.7732	0.7583	0.7583	0.0000
NH_3	0.0000	0.0000	0.0000	0.0000	0.0000	0.0000	0.0000	0.0000	0.0000	0.0000	0.0000	0.0000
O_2	0.0000	0.0000	0.0000	0.0000	0.0000	0.0000	0.0000	0.0000	0.2074	0.1065	0.1065	0.0000
SO_2	0.0000	0.0000	0.0000	0.0000	0.0000	0.0000	0.0000	0.0000	0.0000	0.0000	0.0000	0.0000
Total	1.0000	1.0000	1.0000	1.0000	1.0000	1.0000	0.0000	1.0000	1.0000	1.0000	1.0000	1.0000
V-L Flowrate (kg_{mol}/hr)	27,930	28,911	16,835	16,835	10,949	1,104	0	982	110,253	139,757	139,757	34,339
V-L Flowrate (kg/hr)	551,437	590,590	66,062	66,062	479,736	44,371	0	39,153	3,181,557	3,828,979	3,828,979	618,619
Solids Flowrate (kg/hr)	0	0	0	0	0	0	5,514	0	0	0	0	0
Temperature (°C)	35	34	34	197	51	48	178	38	15	561	132	533
Pressure (MPa, abs)	5.14	5.1	4.999	3.172	15.270	0.163	0.119	5.512	0.101	0.105	0.105	12.512
Enthalpy (kJ/kg)[A]	37.11	33.6	256.725	1,476.079	-162.700	53.966	---	-15.243	30.227	832.909	343.672	3,429.212
Density (kg/m^3)	40.7	42.1	7.5	3.1	643.2	2.5	5,279.2	110.1	1.2	0.4	0.9	36.8
V-L Molecular Weight	19.744	20	3.924	3.924	43.815	40.204	---	39.887	28.857	27.397	27.397	18.015
V-L Flowrate (lb_{mol}/hr)	61,574	63,738	37,115	37,115	24,139	2,433	0	2,164	243,066	308,111	308,111	75,704
V-L Flowrate (lb/hr)	1,215,711	1,302,028	145,641	145,641	1,057,638	97,821	0	86,317	7,014,133	8,441,453	8,441,453	1,363,822
Solids Flowrate (lb/hr)	0	0	0	0	0	0	12,156	0	0	0	0	0
Temperature (°F)	95	94	94	387	124	119	353	100	59	1,041	270	991
Pressure (psia)	745.0	740.0	725.0	460.0	2,214.7	23.7	17.3	799.5	14.7	15.2	15.2	1,814.7
Enthalpy (Btu/lb)[A]	16.0	14.5	110.4	634.6	-69.9	23.2	---	-6.6	13.0	358.1	147.8	1,474.3
Density (lb/ft^3)	2.544	3	0.468	0.197	40.153	0.154	329.568	6.873	0.076	0.026	0.053	2.299

A - Reference conditions are 32.02 F & 0.089 PSIA

Exhibit 4-111 Case 2 D4C Stream Table, 97% CO_2 Capture

	1	2	3	4	5	6	7	8	9	10	11	12
V-L Mole Fraction												
Ar	0.0092	0.0274	0.0318	0.0023	0.0318	0.0000	0.0000	0.0000	0.0086	0.0068	0.0000	0.0054
CH_4	0.0000	0.0000	0.0000	0.0000	0.0000	0.0000	0.0000	0.0000	0.0011	0.0009	0.0000	0.0007
CO	0.0000	0.0000	0.0000	0.0000	0.0000	0.0000	0.0000	0.0000	0.3576	0.2818	0.0000	0.0060
CO_2	0.0003	0.0096	0.0000	0.0000	0.0000	0.0000	0.0000	0.0000	0.1380	0.1087	0.0000	0.3082
COS	0.0000	0.0000	0.0000	0.0000	0.0000	0.0000	0.0000	0.0000	0.0002	0.0001	0.0000	0.0000
H_2	0.0000	0.0000	0.0000	0.0000	0.0000	0.0000	0.0000	0.0000	0.3406	0.2684	0.0000	0.4366
H_2O	0.0099	0.2415	0.0000	0.0003	0.0000	0.0000	0.9995	0.0000	0.1369	0.3201	1.0000	0.2325
HCl	0.0000	0.0000	0.0000	0.0000	0.0000	0.0000	0.0000	0.0000	0.0008	0.0002	0.0000	0.0001
H_2S	0.0000	0.0000	0.0000	0.0000	0.0000	0.0000	0.0000	0.0000	0.0073	0.0057	0.0000	0.0047
N_2	0.7732	0.4856	0.0178	0.9919	0.0178	0.0000	0.0000	0.0000	0.0070	0.0055	0.0000	0.0044
NH_3	0.0000	0.0000	0.0000	0.0000	0.0000	0.0000	0.0005	0.0000	0.0019	0.0016	0.0000	0.0013
O_2	0.2074	0.2358	0.9504	0.0054	0.9504	0.0000	0.0000	0.0000	0.0000	0.0000	0.0000	0.0000
SO_2	0.0000	0.0000	0.0000	0.0000	0.0000	0.0000	0.0000	0.0000	0.0000	0.0000	0.0000	0.0000
Total	1.0000	1.0000	1.0000	1.0000	1.0000	0.0000	1.0000	0.0000	1.0000	1.0000	1.0000	1.0000
V-L Flowrate (kg_{mol}/hr)	27,337	929	104	20,752	5,513	0	5,025	0	23,067	29,264	7,127	36,391
V-L Flowrate (kg/hr)	788,869	25,102	3,344	582,313	177,406	0	90,532	0	464,140	575,510	128,391	703,901
Solids Flowrate (kg/hr)	0	0	0	0	0	220,380	0	24,179	0	0	0	0
Temperature (°C)	15	21	32	93	32	15	142	1,316	677	206	288	240
Pressure (MPa, abs)	0.10	0.11	0.86	2.65	0.86	0.10	5.79	5.62	5.55	5.52	5.52	5.41
Enthalpy (kJ/kg)[A]	30.23	37.80	26.67	92.51	26.67	---	537.77	---	1,424.65	1,068.81	2,918.18	942.20
Density (kg/m^3)	1.2	1.6	11.0	24.4	11.0	---	872.0	---	14.0	27.2	25.6	24.8
V-L Molecular Weight	28.857	27.019	32.181	28.060	32.181	---	18.015	---	20.121	19.666	18.015	19.343
V-L Flowrate (lb_{mol}/hr)	60,268	2,048	229	45,751	12,154	0	11,079	0	50,855	64,517	15,712	80,229
V-L Flowrate (lb/hr)	1,739,159	55,341	7,372	1,283,780	391,114	0	199,590	0	1,023,253	1,268,783	283,054	1,551,837
Solids Flowrate (lb/hr)	0	0	0	0	0	485,856	0	53,307	0	0	0	0
Temperature (°F)	59	70	90	199	90	59	287	2,400	1,250	403	550	463
Pressure (psia)	14.7	16.4	125.0	384.0	125.0	14.7	840.0	815.0	805.0	800.0	800.0	785.0
Enthalpy (Btu/lb)[A]	13.0	16.2	11.5	39.8	11.5	---	231.2	---	612.5	459.5	1,254.6	405.1
Density (lb/ft^3)	0.076	0.101	0.687	1.521	0.687	---	54.440	---	0.871	1.699	1.597	1.550

A - Reference conditions are 32.02 F & 0.089 PSIA

Exhibit 4-111 Case 2 D4C Stream Table, 97% CO2 Capture (continued)

	13	14	15	16	17	18	19	20	21	22	23	24
V-L Mole Fraction												
Ar	0.0071	0.0069	0.0120	0.0120	0.0002	0.0007	0.0000	0.0035	0.0092	0.0091	0.0091	0.0000
CH_4	0.0009	0.0009	0.0015	0.0015	0.0000	0.0002	0.0000	0.0000	0.0000	0.0000	0.0000	0.0000
CO	0.0078	0.0077	0.0133	0.0133	0.0002	0.0008	0.0000	0.0062	0.0000	0.0000	0.0000	0.0000
CO_2	0.4019	0.4231	0.0059	0.0059	0.9951	0.8233	0.0000	0.9044	0.0003	0.0027	0.0027	0.0000
COS	0.0000	0.0000	0.0000	0.0000	0.0000	0.0001	0.0000	0.0000	0.0000	0.0000	0.0000	0.0000
H_2	0.5692	0.5478	0.9561	0.9561	0.0044	0.0376	0.0000	0.0638	0.0000	0.0000	0.0000	0.0000
H_2O	0.0012	0.0013	0.0001	0.0001	0.0000	0.0087	0.0000	0.0019	0.0099	0.1217	0.1217	1.0000
HCl	0.0000	0.0000	0.0000	0.0000	0.0000	0.0000	0.0000	0.0000	0.0000	0.0000	0.0000	0.0000
H_2S	0.0061	0.0060	0.0000	0.0000	0.0000	0.1285	0.0000	0.0030	0.0000	0.0000	0.0000	0.0000
N_2	0.0058	0.0063	0.0110	0.0110	0.0000	0.0003	0.0000	0.0173	0.7732	0.7600	0.7600	0.0000
NH_3	0.0000	0.0000	0.0000	0.0000	0.0000	0.0000	0.0000	0.0000	0.0000	0.0000	0.0000	0.0000
O_2	0.0000	0.0000	0.0000	0.0000	0.0000	0.0000	0.0000	0.0000	0.2074	0.1065	0.1065	0.0000
SO_2	0.0000	0.0000	0.0000	0.0000	0.0000	0.0000	0.0000	0.0000	0.0000	0.0000	0.0000	0.0000
Total	1.0000	1.0000	1.0000	1.0000	1.0000	1.0000	0.0000	1.0000	1.0000	1.0000	1.0000	1.0000
V-L Flowrate (kg_{mol}/hr)	27,912	29,141	16,593	16,593	11,168	1,356	0	1,229	110,253	139,792	139,792	34,282
V-L Flowrate (kg/hr)	551,082	601,304	56,035	56,035	489,389	55,454	0	50,222	3,181,557	3,826,524	3,826,524	617,598
Solids Flowrate (kg/hr)	0	0	0	0	0	0	5,510	0	0	0	0	0
Temperature (°C)	35	34	34	197	51	48	178	38	15	560	132	532
Pressure (MPa, abs)	5.14	5.1	4.999	3.172	15.270	0.163	0.119	5.512	0.101	0.105	0.105	12.512
Enthalpy (kJ/kg)[A]	37.11	32.5	297.541	1,704.475	-162.852	51.196	---	-18.172	30.227	832.246	343.704	3,427.800
Density (kg/m^3)	40.7	42.7	6.5	2.7	643.7	2.5	5,280.0	115.5	1.2	0.4	0.9	36.9
V-L Molecular Weight	19.744	21	3.377	3.377	43.819	40.909	---	40.864	28.857	27.373	27.373	18.015
V-L Flowrate (lb_{mol}/hr)	61,535	64,244	36,581	36,581	24,622	2,988	0	2,710	243,066	308,188	308,188	75,579
V-L Flowrate (lb/hr)	1,214,928	1,325,649	123,536	123,536	1,078,918	122,254	0	110,721	7,014,133	8,436,041	8,436,041	1,361,570
Solids Flowrate (lb/hr)	0	0	0	0	0	0	12,148	0	0	0	0	0
Temperature (°F)	95	93	93	386	124	119	352	100	59	1,040	270	990
Pressure (psia)	745.0	740.0	725.0	460.0	2,214.7	23.7	17.3	799.5	14.7	15.2	15.2	1,814.7
Enthalpy (Btu/lb)[A]	16.0	14.0	127.9	732.8	-70.0	22.0	---	-7.8	13.0	357.8	147.8	1,473.7
Density (lb/ft^3)	2.544	3	0.403	0.169	40.186	0.157	329.622	7.208	0.076	0.026	0.053	2.301

A - Reference conditions are 32.02 F & 0.089 PSIA

Exhibit 4-112 Case 2 D4 Performance Modeling Results

POWER SUMMARY (Gross Power at Generator Terminals, kWe)	D4A (90%)	D4B (95%)	D4C (97%)
Gas Turbine Power	464,000	464,000	464,000
Sweet Gas Expander Power	6,300	6,000	6,000
Steam Turbine Power	263,700	256,600	253,600
Total	**734,000**	**726,600**	**723,600**
AUXILIARY LOAD SUMMARY, kWe			
Coal Handling	469	468	468
Coal Milling	2,272	2,268	2,267
Sour Water Recycle Slurry Pump	190	190	189
Slag Handling	1,164	1,161	1,161
Air Separation Unit Auxiliaries	1,000	1,000	1,000
Air Separation Unit Main Air Compressor	67,362	67,291	67,272
Oxygen Compressor	10,642	10,624	10,617
Nitrogen Compressors	35,645	36,975	37,084
CO_2 Compressor	31,161	32,723	33,376
Boiler Feedwater Pumps	4,178	4,167	4,163
Condensate Pump	279	266	261
Quench Water Pump	538	537	536
Circulating Water Pump	4,621	4,551	4,521
Ground Water Pumps	527	519	517
Cooling Tower Fans	2,390	2,352	2,337
Scrubber Pumps	226	221	221
Acid Gas Removal	19,230	21,273	22,125
Gas Turbine Auxiliaries	1,000	1,000	1,000
Steam Turbine Auxiliaries	100	100	100
Claus Plant/TGTU Auxiliaries	250	250	250
Claus Plant TG Recycle Compressor	1,760	4,400	5,493
Miscellaneous Balance of Plant [1]	3,000	3,000	3,000
Transformer Losses	2,752	2,754	2,751
TOTAL AUXILIARIES, kWe	**190,756**	**198,090**	**200,709**
NET POWER, kWe	**543,244**	**528,510**	**522,891**
Net Plant Efficiency, % (HHV)	32.6%	31.8%	31.5%
Net Plant Heat Rate, kJ/kWh (Btu/kWh)	11,035 (10,459)	11,322 (10,731)	11,437 (10,840)
Condenser Duty, GJ/hr (10^6 Btu/hr)	1,519 (1,440)	1,435 (1,360)	1,403 (1,330)
CONSUMABLES			
As-Received Coal Feed, kg/hr (lb/hr)	220,911 (487,026)	220,522 (486,169)	220,380 (485,856)
Thermal Input, kW_{th} [2]	1,665,125	1,662,195	1,661,125
Raw Water Withdrawal, m^3/min (gpm)	22.0 (5,817)	21.7 (5,739)	21.6 (5,707)
Raw Water Consumption, m^3/min (gpm)	17.9 (4,741)	17.7 (4,679)	17.6 (4,654)

Notes: 1. Includes plant control systems, lighting, HVAC, and miscellaneous low voltage loads
2. HHV of As Received Illinois No. 6 coal is 27,135 kJ/kg (11,666 Btu/lb)

4.3.4.1 Environmental Performance for Case 2 D4

The environmental targets for emissions of Hg, NOx, SO_2, and particulate matter were presented in Section 2.4. A summary of the plant air emissions for Case 2 D4A, D4B, and D4C is presented in Exhibit 4-113.

For Case 2 D4, SO_2 emissions are controlled by sulfur capture across the two-stage Selexol™ unit. The clean syngas exiting the AGR unit has a sulfur concentration of about 10 ppmv, resulting in a concentration in the flue gas of less than 2 ppmv. The H_2S-rich regeneration gas produced in Case 2 D4 is fed to a Claus plant, producing elemental sulfur. The Claus plant tail gas is hydrogenated to convert all sulfur species to H_2S and then recycled back to the Selexol™ unit, thereby eliminating the need for a tail gas treatment unit.

NOx emissions are limited by nitrogen dilution of the syngas to 15 ppmvd (as NO_2 @ 15 percent O_2). Ammonia in the syngas is removed with process condensate prior to the low-temperature AGR process, and ultimately incinerated in the Claus plant burner. This also assists in lowering NOx levels.

Particulate discharge to the atmosphere is limited to extremely low values by the use of the syngas quench in addition to the syngas scrubber and the gas washing effect of the AGR absorber. The particulate emissions represent filterable particulate only.

Ninety-five percent of the mercury is captured from the syngas by an activated carbon bed.

For Case 2 D4, varying levels of the CO_2 [90 percent (D4A), 95 percent (D4B), and 97 percent (D4C)] in the syngas are captured in the two-stage Selexol™ unit and compressed for sequestration. The carbon balance for Case 2 D4 is shown in Exhibit 4-114. The carbon input to the plant consists of carbon in the air and coal. Carbon in the air is not neglected here since the Aspen model accounts for air components throughout. Carbon leaves the plant as unburned carbon in the slag, as dissolved CO_2 in the wastewater blowdown stream, and as CO_2 in the stack gas, ASU vent gas, and the captured CO_2 product. Carbon in the wastewater blowdown stream is calculated by difference to close the material balance. The carbon capture efficiency is defined as the pounds of carbon in the CO_2 product stream relative to the amount of carbon in the coal, less carbon contained in the slag, represented by the following fraction:

(Carbon in CO_2 Product)/[(Carbon in the Coal)-(Carbon in Slag)] or
274,684/(310,453-6,209)*100=90.3% (D4A)
288,563/(309,907-6,198)*100=95.0% (D4B)
294,371/(309,708-6,194)*100=97.0% (D4C)

Exhibit 4-115 shows the sulfur balance for Case 2 D2. Sulfur input comes solely from the sulfur in the coal. Sulfur output includes the pounds of sulfur recovered in the Claus plant, dissolved SO_2 in the wastewater blowdown stream, and sulfur emitted in the stack gas. Sulfur in the slag is considered to be negligible, and the sulfur content of the blowdown stream is calculated by difference to close the material balance. The total sulfur capture is represented by the following fraction:

(Sulfur byproduct/Sulfur in the coal) or
(12,178/12,207)*100 = 99.8% (D4A)
(12,156/12,185)*100 = 99.8% (D4B)
(12,148/12,178)*100 = 99.8% (D4C)

The overall water balances for Case 2 D4A, D4B, and D4C are shown in Exhibit 4-116, Exhibit 4-117, and Exhibit 4-118, respectively. Raw water is obtained from groundwater (50 percent) and from municipal sources (50 percent). Water demand represents the total amount of water required for a particular process. Some water is recovered within the process and that water is reused as internal recycle. Raw water withdrawal is the difference between water demand and internal recycle. Process water discharged from the power plant is also accounted for in this study. Raw water consumption represents raw water withdrawal less process water discharge.

Heat and Mass Balance Diagrams

Heat and mass balance diagrams are shown for the following subsystems in Exhibit 4-119 through Exhibit 4-127.

- Gasifier and ASU
- Syngas Cleanup
- Power Block

An overall plant energy balance for Case D4A, D4B, and D4C is provided in tabular form in Exhibit 4-128, Exhibit 4-129, and Exhibit 4-130, respectively. The power out is the combined combustion turbine, steam turbine and expander power after generator losses. In addition, energy balance Sankey diagrams are provided for D4A, D4B, and D4C in Exhibit 4-131, Exhibit 4-132, and Exhibit 4-133, respectively.

Exhibit 4-113 Case 2 D4 Estimated Air Emission Rates

	kg/GJ ($lb/10^6$ Btu)			Tonne/year (ton/year) 85% capacity factor			kg/MWh_{net} (lb/MWh_{net})		
	D4A	D4B	D4C	D4A	D4B	D4C	D4A	D4B	D4C
SO_2	0.001 (0.002)	0.001 (0.002)	0.001 (0.002)	39 (43)	39 (43)	39 (43)	0.008 (0.020)	0.008 (0.020)	0.008 (0.020)
NO_X	0.021 (0.049)	0.021 (0.049)	0.021 (0.049)	878 (967)	878 (968)	878 (968)	0.171 (0.376)	0.172 (0.380)	0.173 (0.382)
PM	0.003 (0.0071)	0.003 (0.0071)	0.003 (0.0071)	128 (141)	128 (141)	128 (141)	0.025 (0.055)	0.025 (0.055)	0.025 (0.056)
Hg	$0.246x10^{-6}$ ($0.571x10^{-6}$)	$0.246x10^{-6}$ ($0.571x10^{-6}$)	$0.246x10^{-6}$ ($0.571x10^{-6}$)	0.010 (0.011)	0.010 (0.011)	0.010 (0.011)	$2.01x10^{-6}$ ($4.42x10^{-6}$)	$2.02x10^{-6}$ ($4.46x10^{-6}$)	$2.03x10^{-6}$ ($4.48x10^{-6}$)
CO_2	8.5 (19.7)	4.5 (10.4)	2.8 (6.5)	355,405 (391,767)	187,497 (206,680)	117,588 (129,619)	69 (152)	37 (81)	23 (51)
CO_2 net							93 (206)	51 (112)	32 (71)

Exhibit 4-114 Case 2 D4 Carbon Balance

Carbon In, kg/hr (lb/hr)			
	D4A	**D4B**	**D4C**
Coal	140,819 (310,453)	140,571 (309,907)	140,481 (309,708)
Air (CO_2)	540 (1,191)	540 (1,190)	540 (1,190)
Total	**141,359 (311,644)**	**141,111 (311,097)**	**141,021 (310,898)**
Carbon Out, kg/hr (lb/hr)			
Slag	2,816 (6,209)	2,811 (6,198)	2,810 (6,194)
Stack Gas	13,841 (30,514)	7,302 (16,098)	4,579 (10,096)
ASU Vent	107 (237)	107 (237)	107 (237)
CO_2 Product	124,595 (274,684)	130,890 (288,563)	133,525 (294,371)
Convergence Tolerance	0 (0)	1 (1)	0 (0)
Total	**141,359 (311,644)**	**141,111 (311,097)**	**141,021 (310,898)**

Exhibit 4-115 Case 2 D4 Sulfur Balance

Sulfur In, kg/hr (lb/hr)			
	D4A	**D4B**	**D4C**
Coal	5,537 (12,207)	5,527 (12,185)	5,524 (12,178)
Total	**5,537 (12,207)**	**5,527 (12,185)**	**5,524 (12,178)**
Sulfur Out, kg/hr (lb/hr)			
Elemental Sulfur	5,524 (12,178)	5,514 (12,156)	5,510 (12,148)
Stack Gas	3 (6)	3 (6)	3 (6)
CO_2 Product	10 (23)	11 (23)	11 (24)
Convergence Tolerance	0 (0)	-1 (0)	0 (0)
Total	**5,537 (12,207)**	**5,527 (12,185)**	**5,524 (12,178)**

Exhibit 4-116 Case 2 D4A (90%) Water Balance

Water Use	Water Demand, m^3/min (gpm)	Internal Recycle, m^3/min (gpm)	Raw Water Withdrawal, m^3/min (gpm)	Process Water Discharge, m^3/min (gpm)	Raw Water Consumption, m^3/min (gpm)
Slag Handling	0.53 (139)	0.53 (139)	0.0 (0)	0.0 (0)	0.0 (0)
Quench/Wash	2.9 (757)	0.72 (191)	2.1 (566)	0.0 (0)	2.1 (566)
Humidifier	0.0 (0)	0.0 (0)	0.0 (0)	0.0 (0)	0.0 (0)
SWS Blowdown	0.0 (0)	0.0 (0)	0.0 (0)	0.03 (7)	-0.03 (-7)
Condenser Makeup	**2.4 (627)**	**0.0 (0)**	**2.4 (627)**	**0.0 (0)**	**2.4 (627)**
Gasifier Steam	0.0 (0)	0.0 (0)	0.0 (0)		
Shift Steam	2.2 (571)	0.0 (0)	2.2 (571)		
CT Steam Dilution	0.0 (0)	0.0 (0)	0.0 (0)		
BFW Makeup	0.21 (56)	0.0 (0)	0.21 (56)		
Cooling Tower	**18.0 (4,753)**	**0.49 (129)**	**17.5 (4,625)**	**4.0 (1,069)**	**13.5 (3,556)**
BFW Blowdown	0.0 (0)	0.21 (56)	-0.21 (-56)		
SWS Blowdown	0.0 (0)	0.28 (73)	-0.28 (-73)		
SWS Excess Water	0.0 (0)	0.0 (0)	0.0 (0)		
Humidifier Tower Blowdown	0.0 (0)	0.0 (0)	0.0 (0)		
Total	**25.3 (6,676)**	**3.25 (858)**	**22.0 (5,817)**	**4.1 (1,076)**	**17.9 (4,741)**
Total, gal/MWh_{net}	**737**	**95**	**643**	**119**	**524**

Exhibit 4-117 Case 2 D4B (95%) Water Balance

Water Use	Water Demand, m^3/min (gpm)	Internal Recycle, m^3/min (gpm)	Raw Water Withdrawal, m^3/min (gpm)	Process Water Discharge, m^3/min (gpm)	Raw Water Consumption, m^3/min (gpm)
Slag Handling	0.52 (139)	0.52 (139)	0.0 (0)	0.0 (0)	0.0 (0)
Quench/Wash	2.9 (755)	0.71 (189)	2.1 (567)	0.0 (0)	2.1 (567)
Humidifier	0.0 (0)	0.0 (0)	0.0 (0)	0.0 (0)	0.0 (0)
SWS Blowdown	0.0 (0)	0.0 (0)	0.0 (0)	0.03 (7)	-0.03 (-7)
Condenser Makeup	**2.4 (622)**	**0.0 (0)**	**2.4 (622)**	**0.0 (0)**	**2.4 (622)**
Gasifier Steam	0.0 (0)	0.0 (0)	0.0 (0)		
Shift Steam	2.1 (566)	0.0 (0)	2.1 (566)		
CT Steam Dilution	0.0 (0)	0.0 (0)	0.0 (0)		
BFW Makeup	0.21 (56)	0.0 (0)	0.21 (56)		
Cooling Tower	**17.7 (4,679)**	**0.49 (128)**	**17.2 (4,551)**	**4.0 (1,052)**	**13.2 (3,498)**
BFW Blowdown	0.0 (0)	0.21 (56)	-0.21 (-56)		
SWS Blowdown	0.0 (0)	0.28 (73)	-0.28 (-73)		
SWS Excess Water	0.0 (0)	0.0 (0)	0.0 (0)		
Humidifier Tower Blowdown	0.0 (0)	0.0 (0)	0.0 (0)		
Total	**25.0 (6,594)**	**3.24 (855)**	**21.7 (5,739)**	**4.0 (1,060)**	**17.7 (4,679)**
Total, gal/MWh_{net}	**749**	**97**	**652**	**120**	**531**

Exhibit 4-118 Case 2 D4C (97%) Water Balance

Water Use	Water Demand, m^3/min (gpm)	Internal Recycle, m^3/min (gpm)	Raw Water Withdrawal, m^3/min (gpm)	Process Water Discharge, m^3/min (gpm)	Raw Water Consumption, m^3/min (gpm)
Slag Handling	0.52 (138)	0.52 (138)	0.0 (0)	0.0 (0)	0.0 (0)
Quench/Wash	2.9 (755)	0.72 (189)	2.1 (566)	0.0 (0)	2.1 (566)
Humidifier	0.0 (0)	0.0 (0)	0.0 (0)	0.0 (0)	0.0 (0)
SWS Blowdown	0.0 (0)	0.0 (0)	0.0 (0)	0.03 (7)	-0.03 (-7)
Condenser Makeup	**2.4 (622)**	**0.0 (0)**	**2.4 (622)**	**0.0 (0)**	**2.4 (622)**
Gasifier Steam	0.0 (0)	0.0 (0)	0.0 (0)		
Shift Steam	2.1 (566)	0.0 (0)	2.1 (566)		
CT Steam Dilution	0.0 (0)	0.0 (0)	0.0 (0)		
BFW Makeup	0.21 (56)	0.0 (0)	0.21 (56)		
Cooling Tower	**17.6 (4,648)**	**0.49 (128)**	**17.1 (4,519)**	**4.0 (1,045)**	**13.2 (3,474)**
BFW Blowdown	0.0 (0)	0.21 (56)	-0.21 (-56)		
SWS Blowdown	0.0 (0)	0.28 (73)	-0.28 (-73)		
SWS Excess Water	0.0 (0)	0.0 (0)	0.0 (0)		
Humidifier Tower Blowdown	0.0 (0)	0.0 (0)	0.0 (0)		
Total	**24.8 (6,562)**	**3.24 (855)**	**21.6 (5,707)**	**4.0 (1,052)**	**17.6 (4,654)**
Total, gal/MWh_{net}	**753**	**98**	**655**	**121**	**534**

Exhibit 4-119 Case 2 D4A (90%) Heat and Mass Balance, GEE Gasifier and ASU

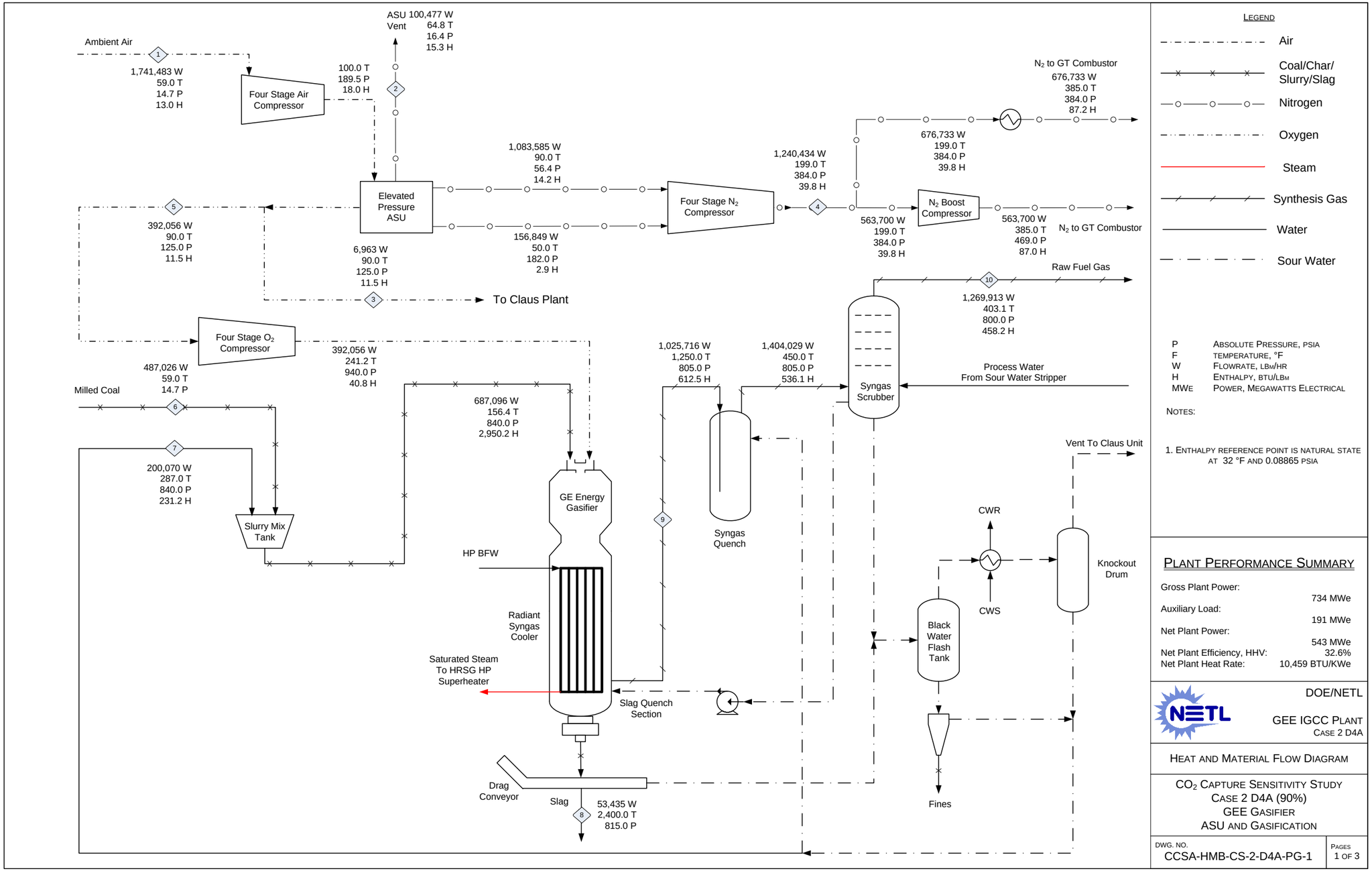

Exhibit 4-120 Case 2 D4A (90%) Heat and Mass Balance, Syngas Cleanup

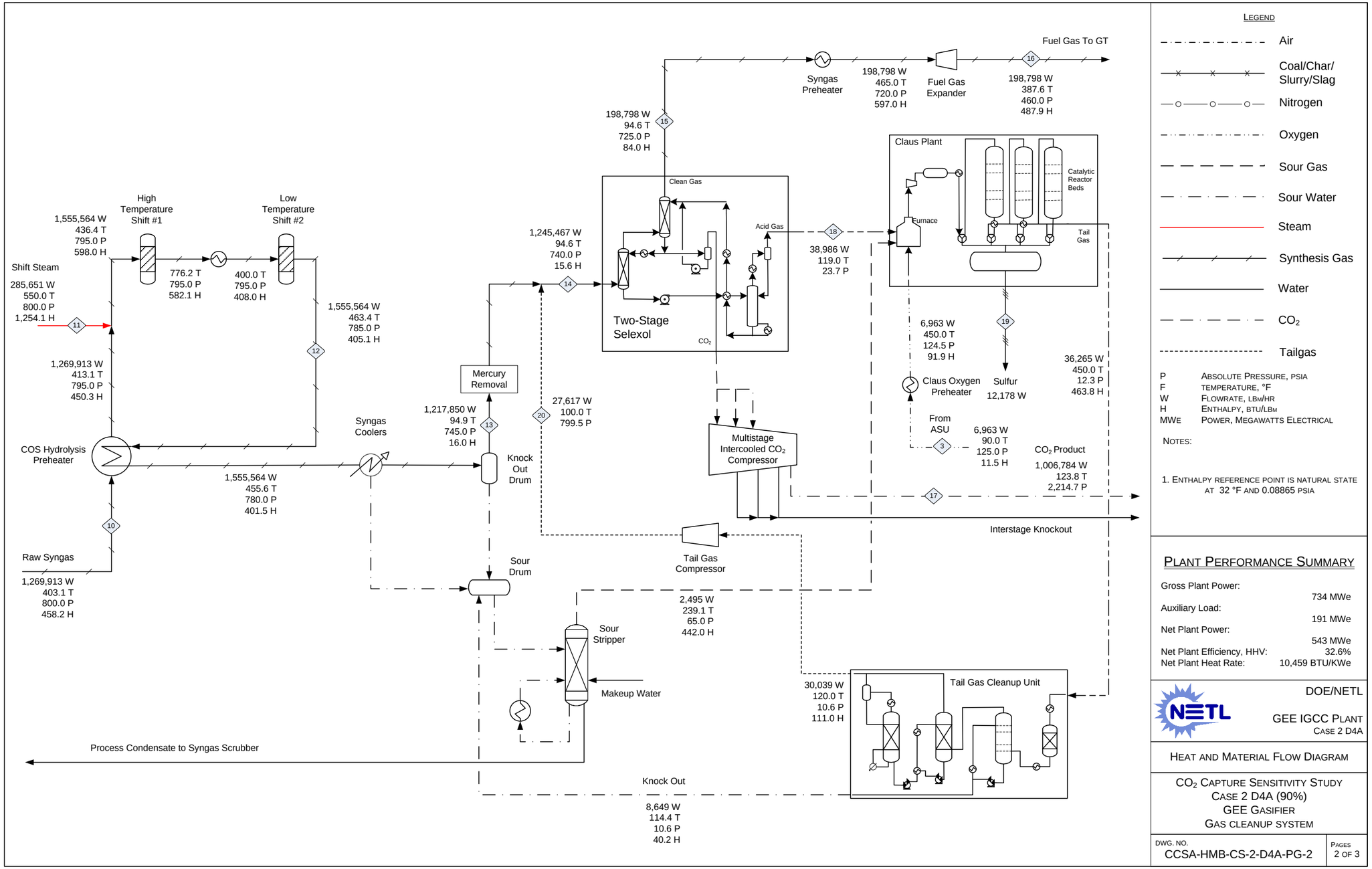

Exhibit 4-121 Case 2 D4A (90%) Heat and Mass Balance, Power Block

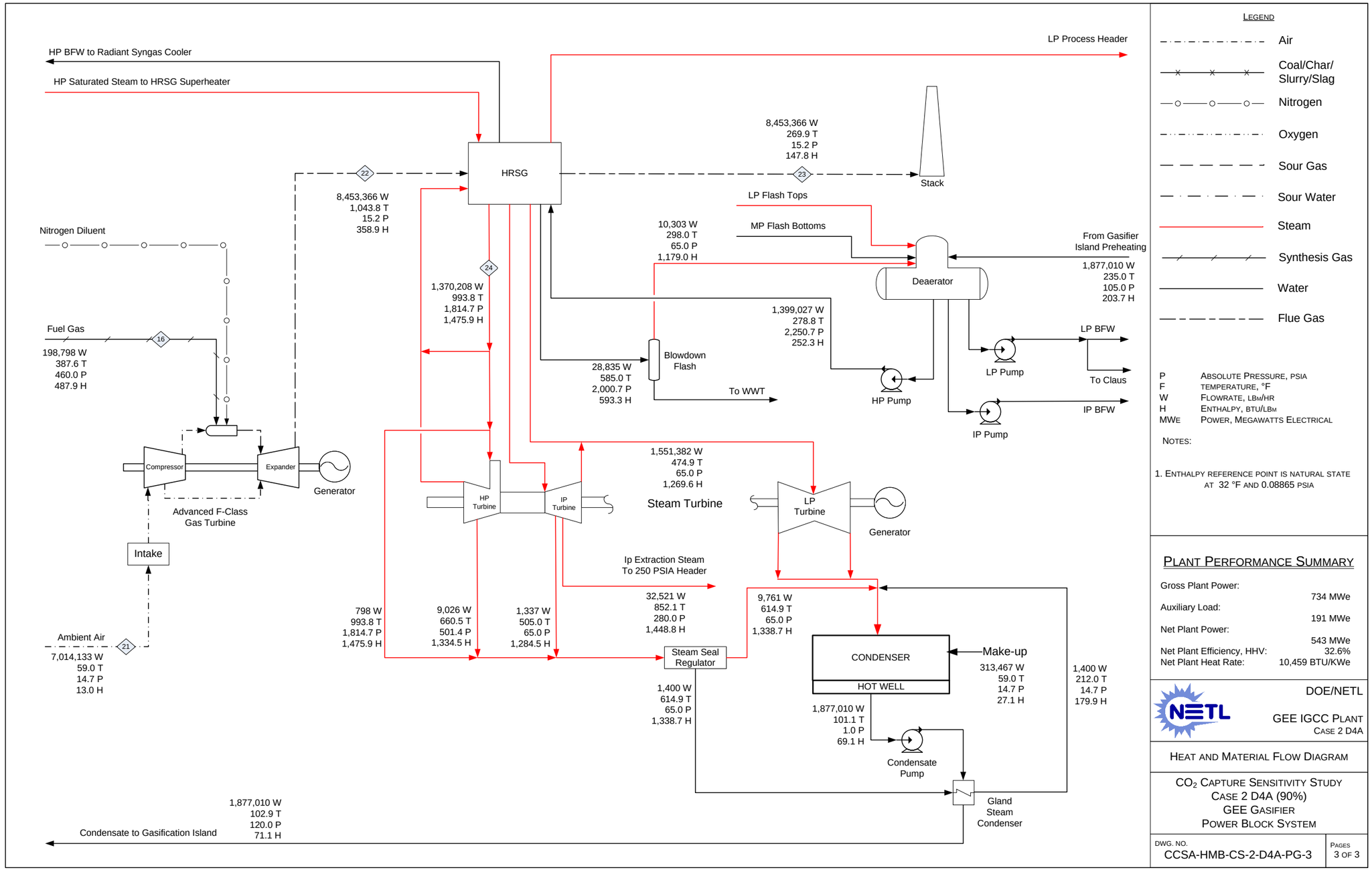

Exhibit 4-122 Case 2 D4B (95%) Heat and Mass Balance, GEE Gasifier and ASU

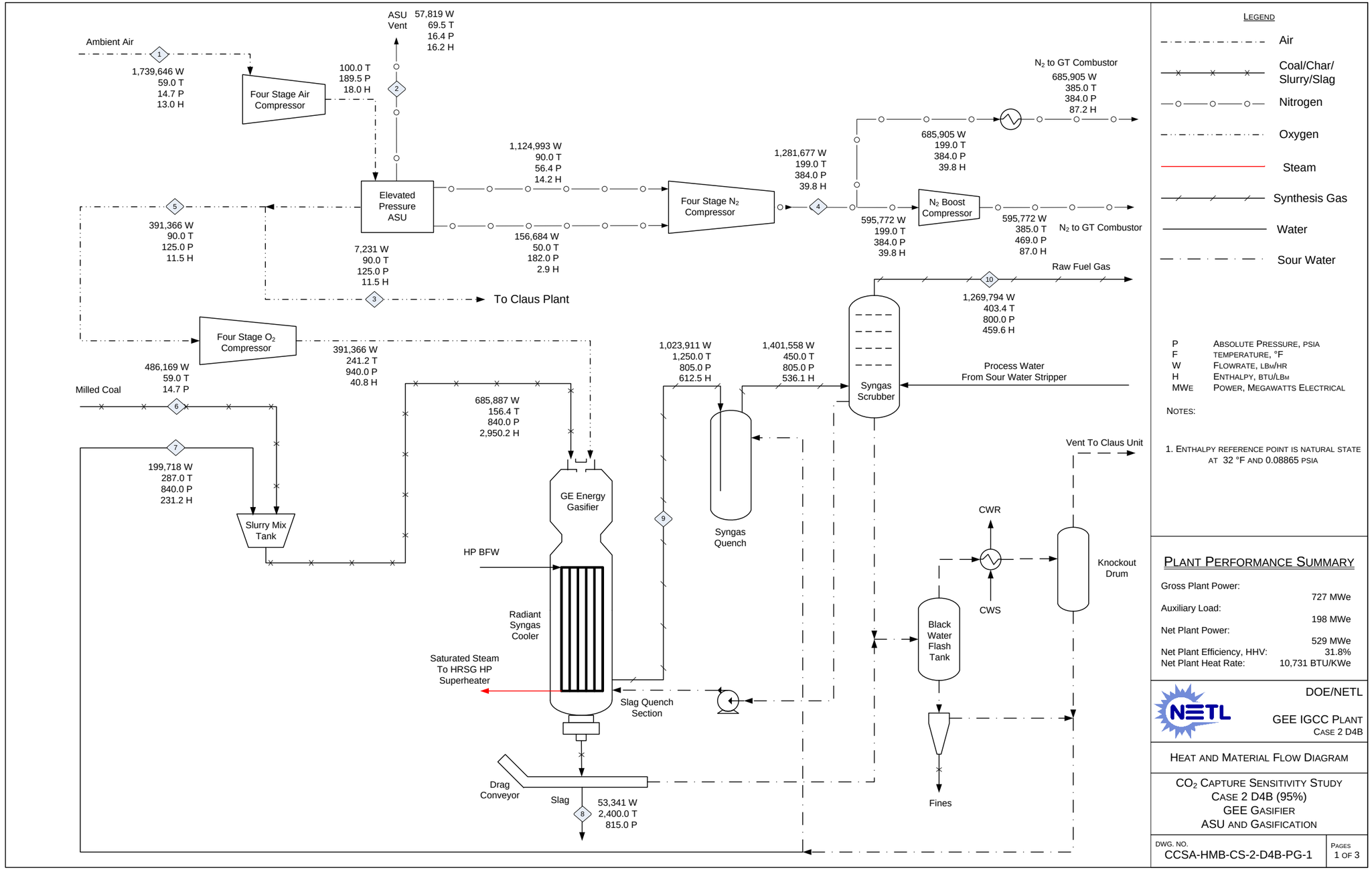

Exhibit 4-123 Case 2 D4B (95%) Heat and Mass Balance, Syngas Cleanup

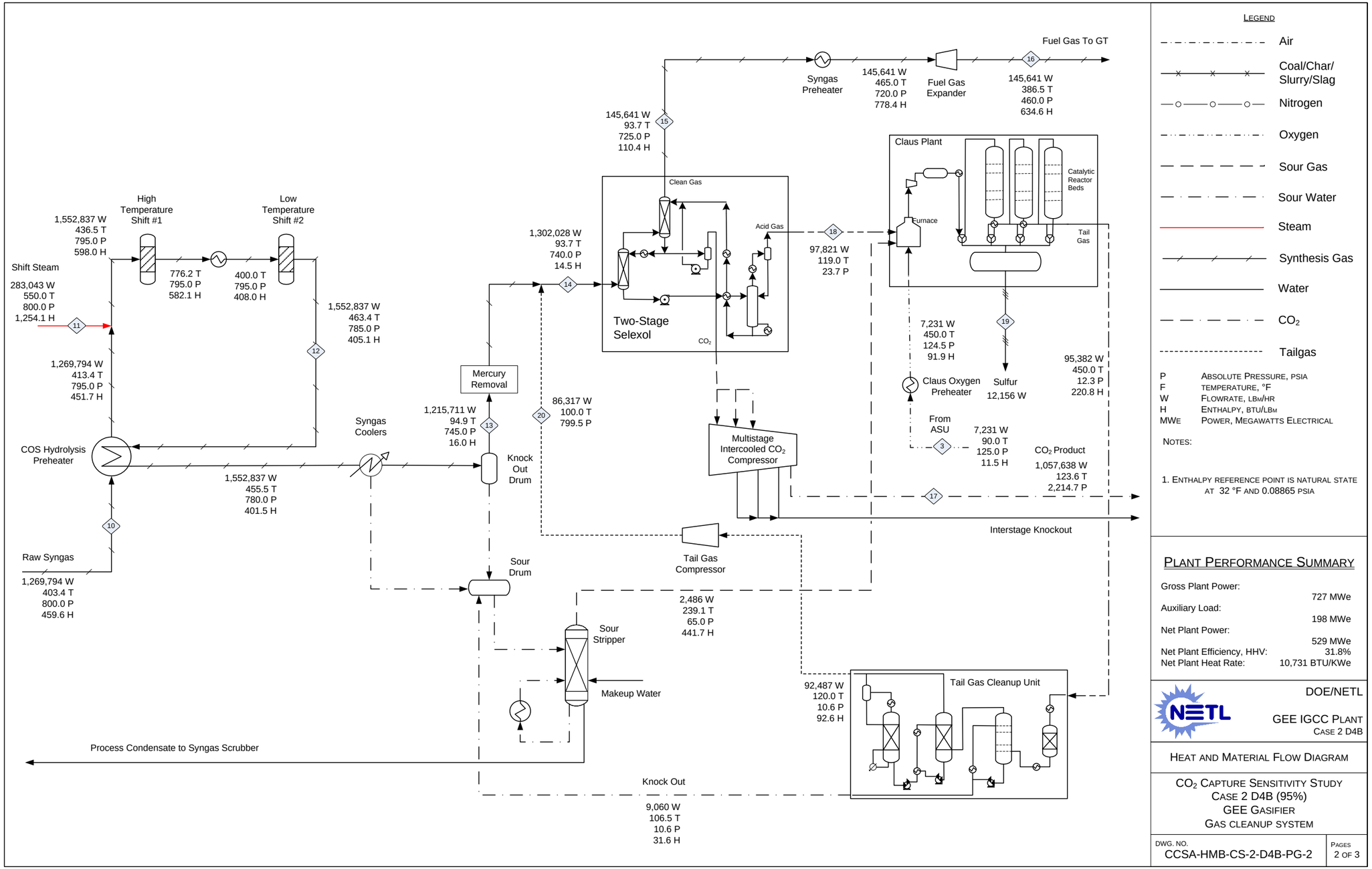

Legend

- Air
- Coal/Char/ Slurry/Slag
- Nitrogen
- Oxygen
- Sour Gas
- Sour Water
- Steam
- Synthesis Gas
- Water
- CO_2
- Tailgas

P	Absolute Pressure, psia
F	temperature, °F
W	Flowrate, lbm/hr
H	Enthalpy, btu/lbm
MWe	Power, Megawatts Electrical

Notes:

1. Enthalpy reference point is natural state at 32 °F and 0.08865 psia

Plant Performance Summary

Gross Plant Power:	727 MWe
Auxiliary Load:	198 MWe
Net Plant Power:	529 MWe
Net Plant Efficiency, HHV:	31.8%
Net Plant Heat Rate:	10,731 BTU/KWe

DOE/NETL

GEE IGCC Plant
Case 2 D4B

Heat and Material Flow Diagram

CO_2 Capture Sensitivity Study
Case 2 D4B (95%)
GEE Gasifier
Gas Cleanup System

DWG. NO. CCSA-HMB-CS-2-D4B-PG-2

Pages 2 of 3

Exhibit 4-124 Case 2 D4B (95%) Heat and Mass Balance, Power Block

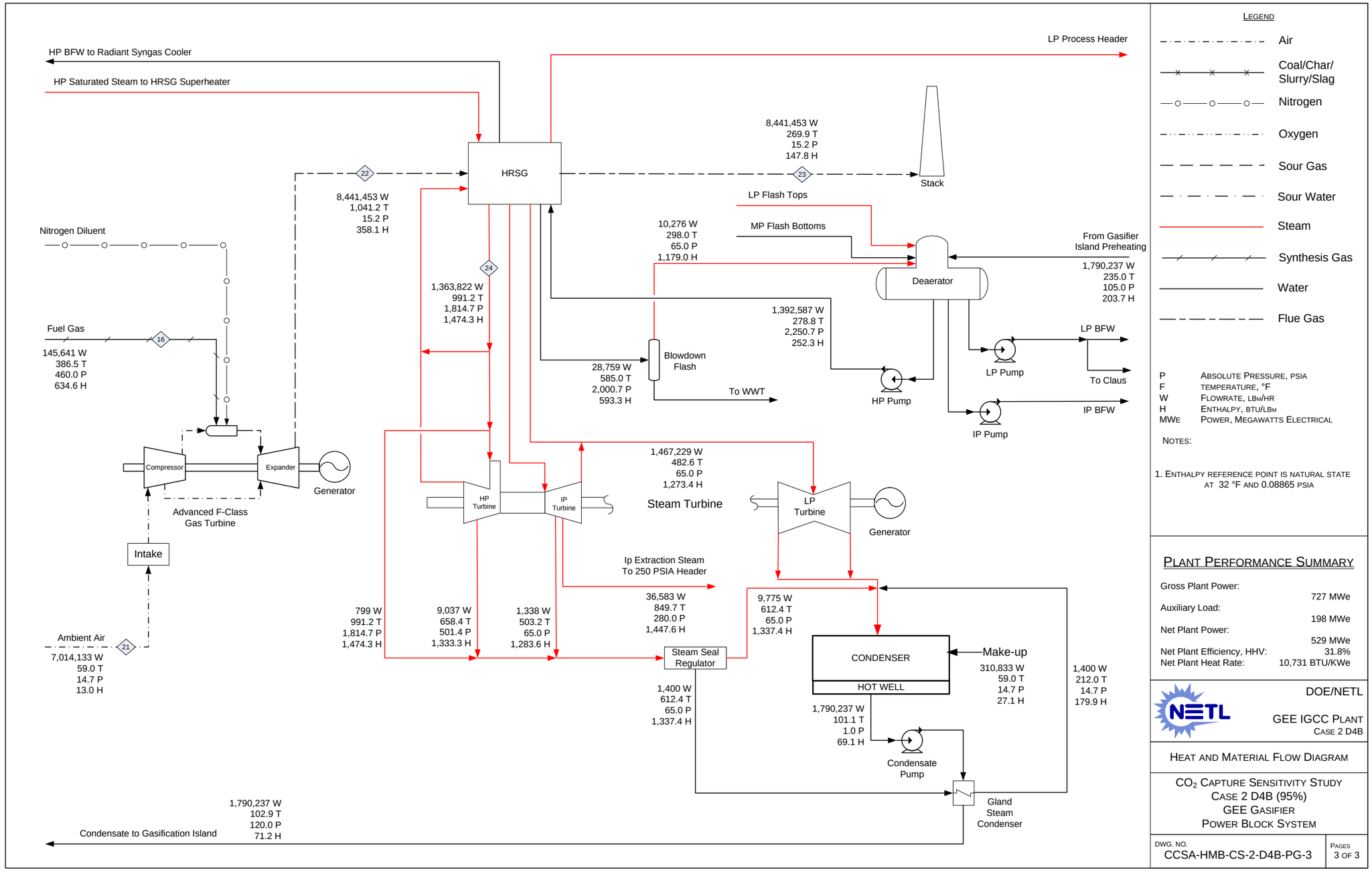

Exhibit 4-125 Case 2 D4C (97%) Heat and Mass Balance, GEE Gasifier and ASU

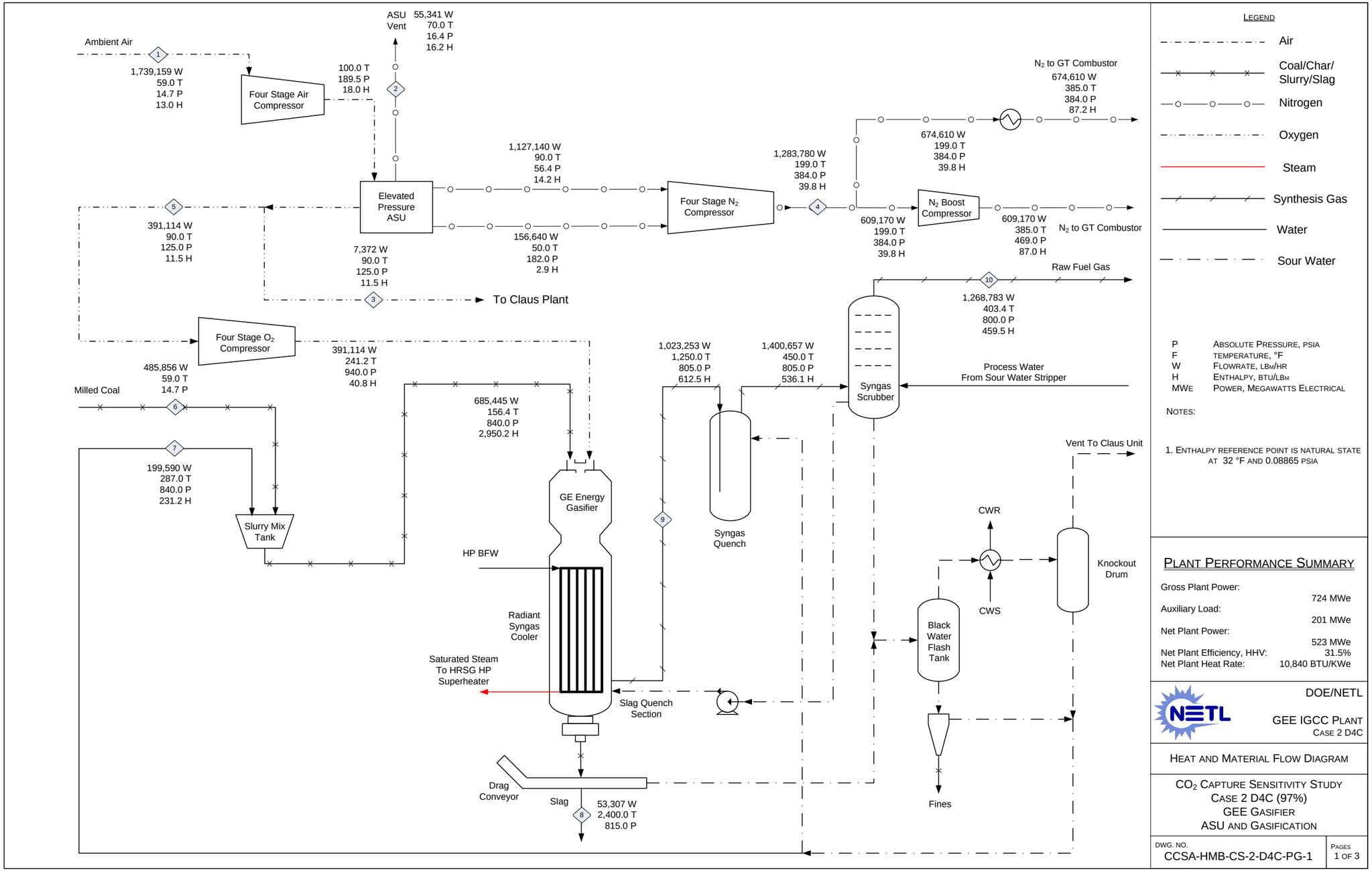

Exhibit 4-126 Case 2 D4C (97%) Heat and Mass Balance, Syngas Cleanup

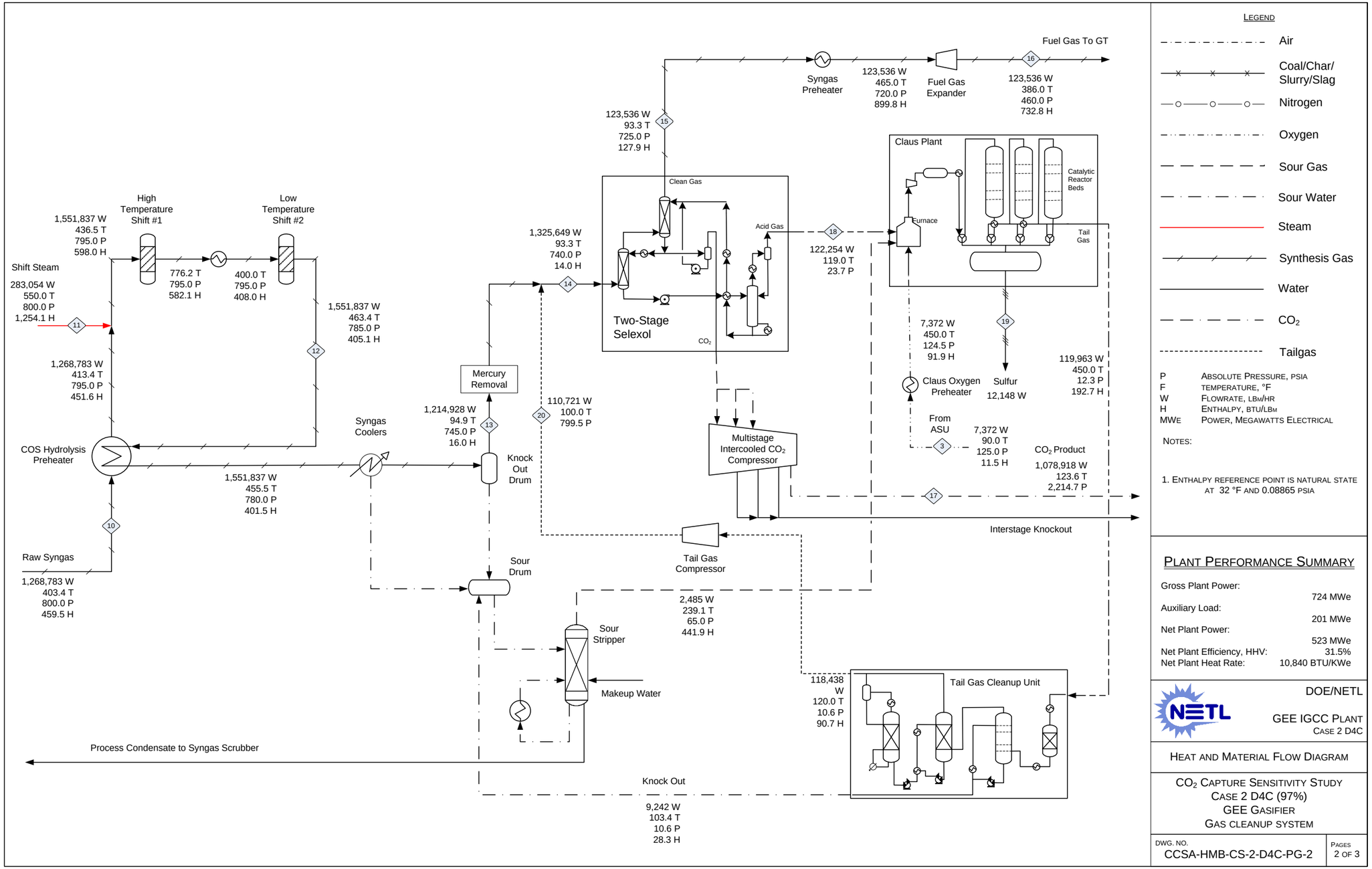

Exhibit 4-127 Case 2 D4C (97%) Heat and Mass Balance, Power Block

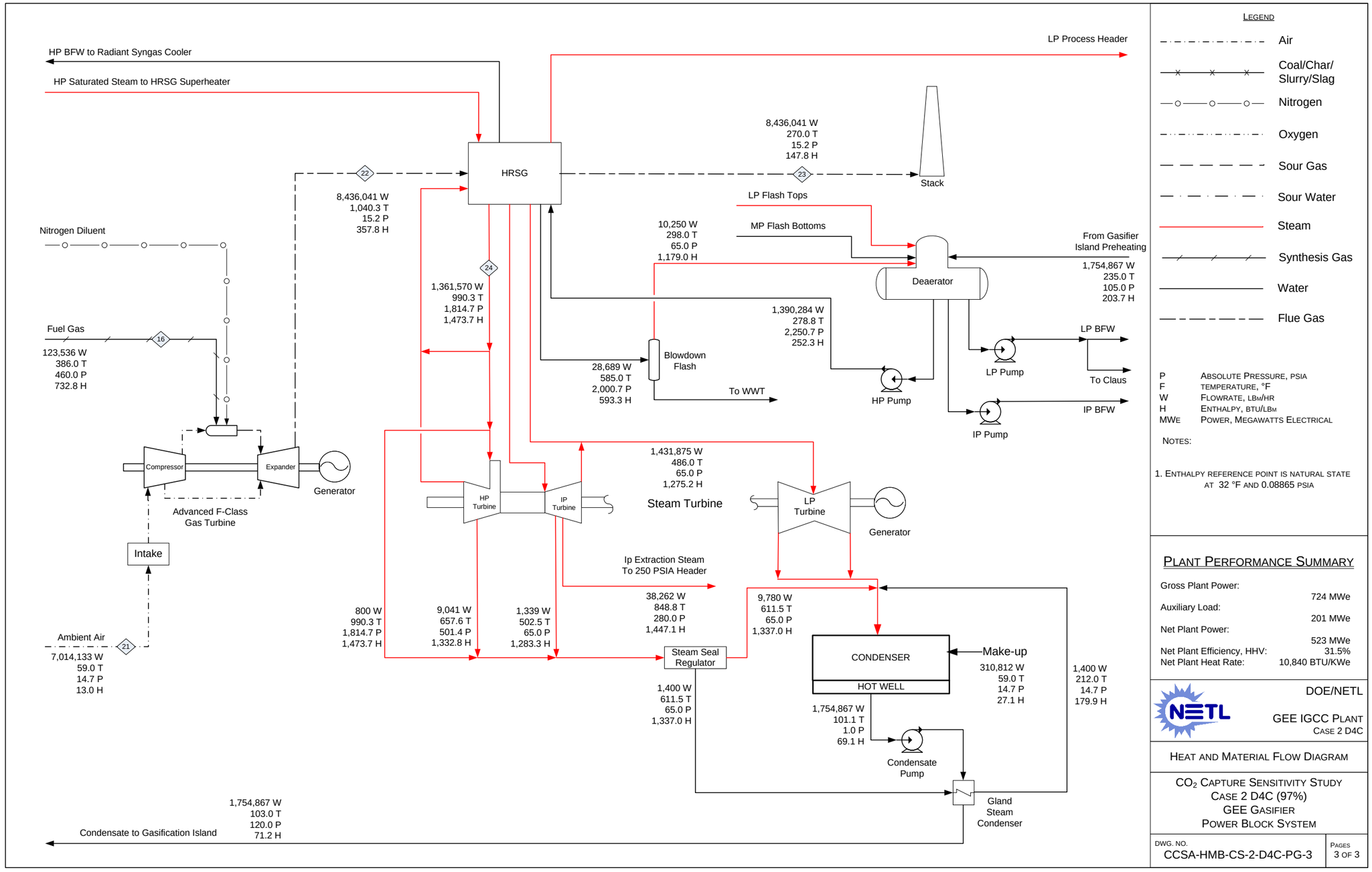

This page intentionally left blank

Exhibit 4-128 Case 2 D4A (90%) Energy Balance

	HHV	Sensible + Latent	Power	Total
Heat In GJ/hr (MMBtu/hr)				
Coal	5,994 (5,682)	5.0 (4.7)	0 (0)	5,999 (5,686)
ASU Air	0 (0)	23.9 (22.6)	0 (0)	24 (23)
GT Air	0 (0)	96.2 (91.2)	0 (0)	96 (91)
Water	0 (0)	82.8 (78.5)	0 (0)	83 (78)
Totals	**5,994 (5,682)**	**207.9 (197.0)**	**0 (0)**	**6,202 (5,879)**
Heat Out GJ/hr (MMBtu/hr)				
ASU Vent	0 (0)	1.6 (1.5)	0 (0)	2 (2)
Slag	92 (88)	37.8 (35.9)	0 (0)	130 (123)
Sulfur	51 (49)	0.6 (0.6)	0 (0)	52 (49)
CO_2	0 (0)	-74.1 (-70.3)	0 (0)	-74 (-70)
Gasifier Heat Loss	0 (0)	44.6 (42.3)	0 (0)	45 (42)
Combustion Turbine Heat Loss	0 (0)	63 (60)	0 (0)	63 (60)
HRSG Flue Gas	0 (0)	1,318 (1,249)	0 (0)	1,318 (1,249)
Cooling Tower*	0 (0)	2,177 (2,063)	0 (0)	2,177 (2,063)
Process Losses**	0 (0)	534 (506)	0 (0)	534 (506)
Net Power	0 (0)	0.0 (0.0)	1,956 (1,854)	1,956 (1,854)
Totals	**144 (136)**	**4,103 (3,889)**	**1,956 (1,854)**	**6,202 (5,879)**

Note: Italicized numbers are estimated
Reference conditions are 0 °C (32.02 °F) & 0.6 kPa (0.089 psia)
* Includes Condenser, Cooling Tower Blowdown, and the following Non-Condenser Cooling Tower Loads: ASU compressor intercoolers, CO_2 compressor intercoolers, sour water stripper condenser, syngas cooler (low level heat rejection), and extraction air cooler.
** Calculated by difference to close the energy balance.

Exhibit 4-129 Case 2 D4B (95%) Energy Balance

	HHV	Sensible + Latent	Power	Total
Heat In GJ/hr (MMBtu/hr)				
Coal	5,984 (5,672)	5.0 (4.7)	0 (0)	5,989 (5,676)
ASU Air	0 (0)	23.9 (22.6)	0 (0)	24 (23)
GT Air	0 (0)	96.2 (91.2)	0 (0)	96 (91)
Water	0 (0)	81.7 (77.4)	0 (0)	82 (77)
Totals	**5,984 (5,672)**	**206.7 (195.9)**	**0 (0)**	**6,191 (5,868)**
Heat Out GJ/hr (MMBtu/hr)				
ASU Vent	0 (0)	1.0 (0.9)	0 (0)	1 (1)
Slag	92 (87)	37.8 (35.8)	0 (0)	130 (123)
Sulfur	51 (48)	0.6 (0.6)	0 (0)	52 (49)
CO_2	0 (0)	-78.1 (-74.0)	0 (0)	-78 (-74)
Gasifier Heat Loss	0 (0)	44.5 (42.2)	0 (0)	45 (42)
Combustion Turbine Heat Loss	0 (0)	63 (60)	0 (0)	63 (60)
HRSG Flue Gas	0 (0)	1,316 (1,247)	0 (0)	1,316 (1,247)
Cooling Tower*	0 (0)	2,121 (2,010)	0 (0)	2,121 (2,010)
Process Losses**	0 (0)	639 (605)	0 (0)	639 (605)
Net Power	0 (0)	0.0 (0.0)	1,903 (1,803)	1,903 (1,803)
Totals	**143 (136)**	**4,145 (3,928)**	**1,903 (1,803)**	**6,191 (5,868)**

Note: Italicized numbers are estimated
Reference conditions are 0 °C (32.02 °F) & 0.6 kPa (0.089 psia)
* Includes Condenser, Cooling Tower Blowdown, and the following Non-Condenser Cooling Tower Loads: ASU compressor intercoolers, CO_2 compressor intercoolers, sour water stripper condenser, syngas cooler (low level heat rejection), and extraction air cooler.
** Calculated by difference to close the energy balance.

Exhibit 4-130 Case 2 D4C (97%) Energy Balance

	HHV	Sensible + Latent	Power	Total
Heat In GJ/hr (MMBtu/hr)				
Coal	5,980 (5,668)	5.0 (4.7)	0 (0)	5,985 (5,673)
ASU Air	0 (0)	23.8 (22.6)	0 (0)	24 (23)
GT Air	0 (0)	96.2 (91.2)	0 (0)	96 (91)
Water	0 (0)	81.2 (77.0)	0 (0)	81 (77)
Totals	**5,980 (5,668)**	**206.2 (195.5)**	**0 (0)**	**6,186 (5,863)**
Heat Out GJ/hr (MMBtu/hr)				
ASU Vent	0 (0)	0.9 (0.9)	0 (0)	1 (1)
Slag	92 (87)	37.8 (35.8)	0 (0)	130 (123)
Sulfur	51 (48)	0.6 (0.6)	0 (0)	52 (49)
CO_2	0 (0)	-79.7 (-75.5)	0 (0)	-80 (-76)
Gasifier Heat Loss	0 (0)	44.5 (42.2)	0 (0)	45 (42)
Combustion Turbine Heat Loss	0 (0)	63 (60)	0 (0)	63 (60)
HRSG Flue Gas	0 (0)	1,315 (1,247)	0 (0)	1,315 (1,247)
Cooling Tower*	0 (0)	2,097 (1,988)	0 (0)	2,097 (1,988)
Process Losses**	0 (0)	681 (645)	0 (0)	681 (645)
Net Power	0 (0)	0.0 (0.0)	1,882 (1,784)	1,882 (1,784)
Totals	**143 (136)**	**4,161 (3,944)**	**1,882 (1,784)**	**6,186 (5,863)**

Note: Italicized numbers are estimated
Reference conditions are 0 °C (32.02 °F) & 0.6 kPa (0.089 psia)
* Includes Condenser, Cooling Tower Blowdown, and the following Non-Condenser Cooling Tower Loads: ASU compressor intercoolers, CO_2 compressor intercoolers, sour water stripper condenser, syngas cooler (low level heat rejection), and extraction air cooler.
** Calculated by difference to close the energy balance.

Exhibit 4-131 Case 2 D4A Energy Balance Sankey Diagram

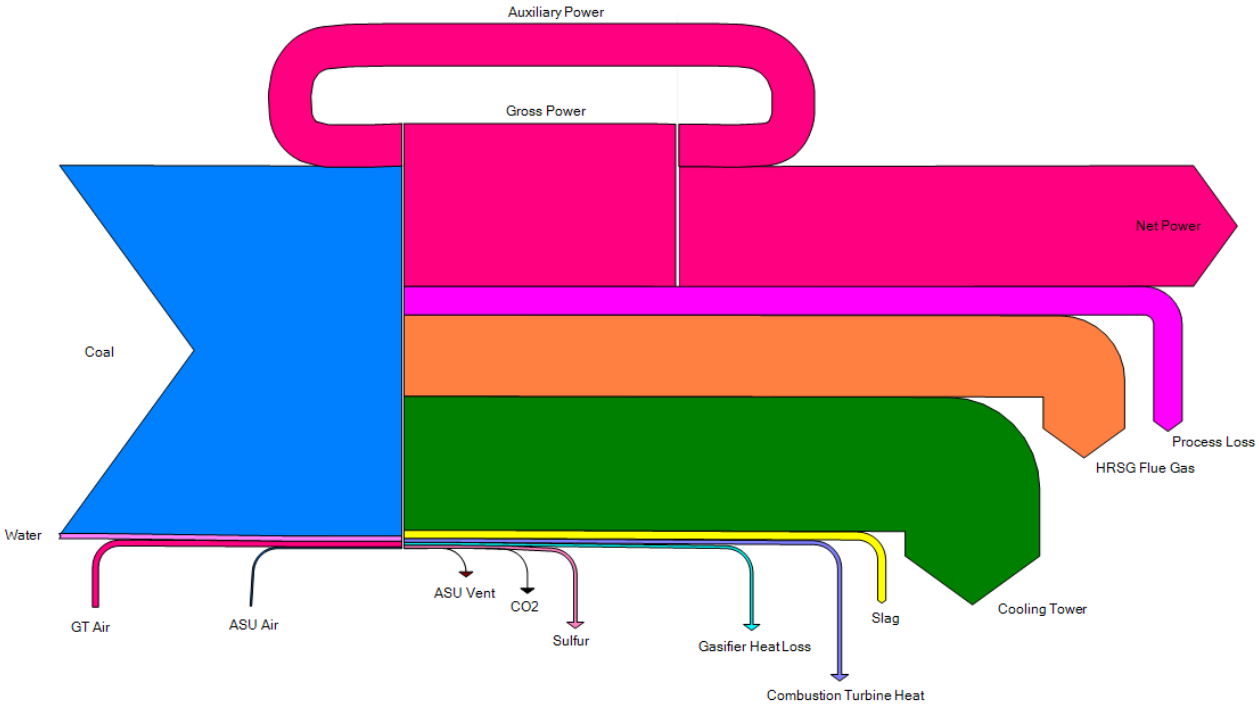

Exhibit 4-132 Case 2 D4B Energy Balance Sankey Diagram

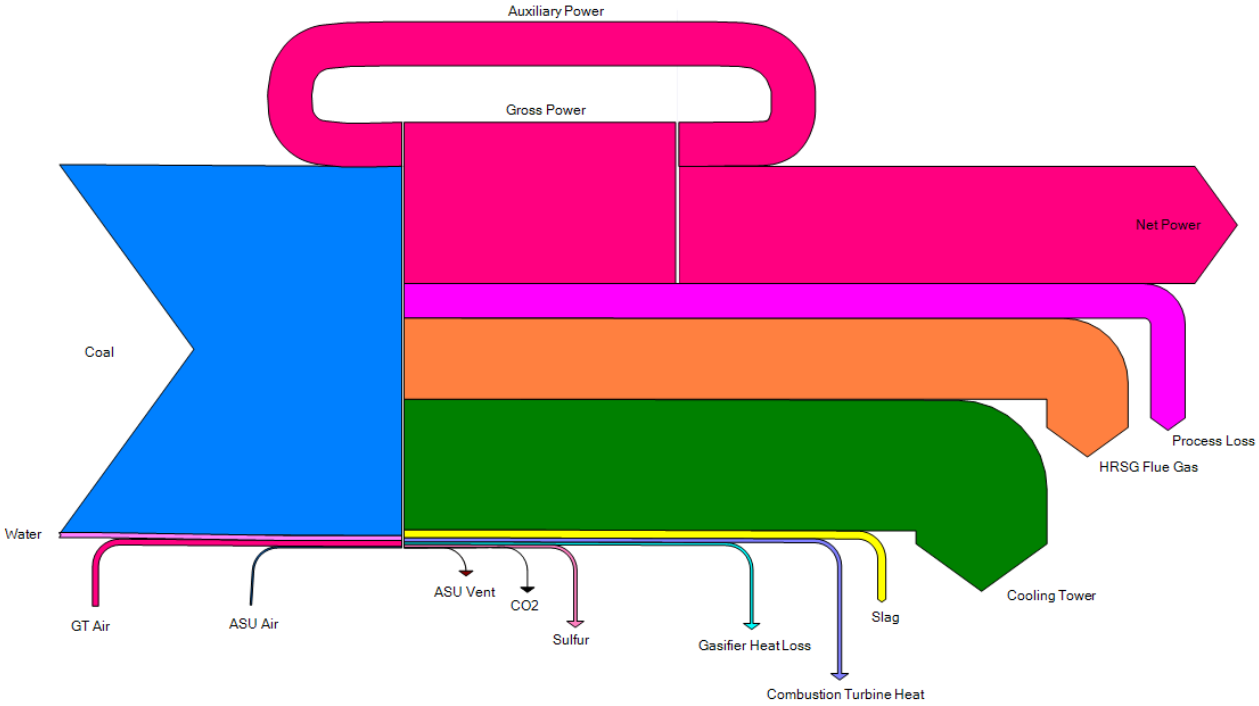

Exhibit 4-133 Case 2 D4C Energy Balance Sankey Diagram

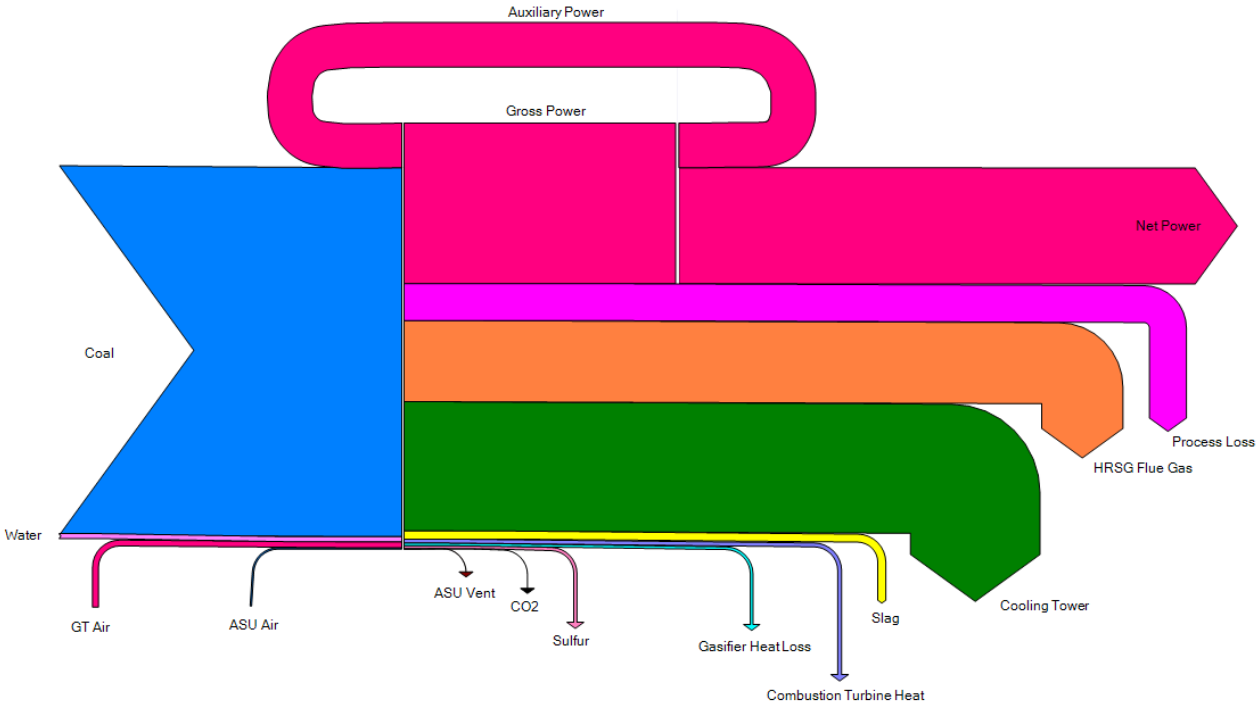

This page intentionally left blank

4.3.4.2 Major Equipment List for Case 2 D4

Major equipment items for Case 2 D4 (two WGS reactors without bypass) are shown in the following tables. The accounts used in the equipment list correspond to the account numbers used in the cost estimates. In general, the design conditions include a 10 percent contingency for flows and heat duties and a 21 percent contingency for heads on pumps and fans.

ACCOUNT 1 COAL HANDLING

Equipment No.	Description	Type	Design Conditions			Opr Qty. (Spares)
			D4A	D4B	D4C	
1	Bottom Trestle Dumper and Receiving Hoppers	N/A	181 tonne (200 ton)	181 tonne (200 ton)	181 tonne (200 ton)	2 (0)
2	Feeder	Belt	572 tonne/hr (630 tph)	572 tonne/hr (630 tph)	572 tonne/hr (630 tph)	2 (0)
3	Conveyor No. 1	Belt	1,134 tonne/hr (1,250 tph)	1,134 tonne/hr (1,250 tph)	1,134 tonne/hr (1,250 tph)	1 (0)
4	Transfer Tower No. 1	Enclosed	N/A	N/A	N/A	1 (0)
5	Conveyor No. 2	Belt	1,134 tonne/hr (1,250 tph)	1,134 tonne/hr (1,250 tph)	1,134 tonne/hr (1,250 tph)	1 (0)
6	As-Received Coal Sampling System	Two-stage	N/A	N/A	N/A	1 (0)
7	Stacker/Reclaimer	Traveling, linear	1,134 tonne/hr (1,250 tph)	1,134 tonne/hr (1,250 tph)	1,134 tonne/hr (1,250 tph)	1 (0)
8	Reclaim Hopper	N/A	45 tonne (50 ton)	45 tonne (50 ton)	45 tonne (50 ton)	2 (1)
9	Feeder	Vibratory	181 tonne/hr (200 tph)	181 tonne/hr (200 tph)	181 tonne/hr (200 tph)	2 (1)
10	Conveyor No. 3	Belt w/ tripper	363 tonne/hr (400 tph)	363 tonne/hr (400 tph)	363 tonne/hr (400 tph)	1 (0)
11	Crusher Tower	N/A	N/A	N/A	N/A	1 (0)
12	Coal Surge Bin w/ Vent Filter	Dual outlet	181 tonne (200 ton)	181 tonne (200 ton)	181 tonne (200 ton)	2 (0)
13	Crusher	Impactor reduction	8 cm x 0 - 3 cm x 0 (3" x 0 - 1-1/4" x 0)	8 cm x 0 - 3 cm x 0 (3" x 0 - 1-1/4" x 0)	8 cm x 0 - 3 cm x 0 (3" x 0 - 1-1/4" x 0)	2 (0)
14	As-Fired Coal Sampling System	Swing hammer	N/A	N/A	N/A	1 (1)
15	Conveyor No. 4	Belt w/tripper	363 tonne/hr (400 tph)	363 tonne/hr (400 tph)	363 tonne/hr (400 tph)	1 (0)
16	Transfer Tower No. 2	Enclosed	N/A	N/A	N/A	1 (0)
17	Conveyor No. 5	Belt w/ tripper	363 tonne/hr (400 tph)	363 tonne/hr (400 tph)	363 tonne/hr (400 tph)	1 (0)
18	Coal Silo w/ Vent Filter and Slide Gates	Field erected	816 tonne (900 ton)	816 tonne (900 ton)	816 tonne (900 ton)	3 (0)

ACCOUNT 2 COAL PREPARATION AND FEED

Equipment No.	Description	Type	Design Condition			Opr Qty. (Spares)
			D4A	D4B	D4C	
1	Feeder	Vibratory	82 tonne/h (90 tph)	82 tonne/h (90 tph)	82 tonne/h (90 tph)	3 (0)
2	Conveyor No. 6	Belt w/tripper	245 tonne/h (270 tph)	245 tonne/h (270 tph)	245 tonne/h (270 tph)	1 (0)
3	Rod Mill Feed Hopper	Dual Outlet	490 tonne (540 ton)	481 tonne (530 ton)	481 tonne (530 ton)	1 (0)
4	Weigh Feeder	Belt	118 tonne/h (130 tph)	118 tonne/h (130 tph)	118 tonne/h (130 tph)	2 (0)
5	Rod Mill	Rotary	118 tonne/h (130 tph)	118 tonne/h (130 tph)	118 tonne/h (130 tph)	2 (0)
6	Slurry Water Storage Tank with Agitator	Field erected	299,921 liters (79,230 gal)	299,391 liters (79,090 gal)	299,201 liters (79,040 gal)	2 (0)
7	Slurry Water Pumps	Centrifugal	833 lpm (220 gpm)	833 lpm (220 gpm)	833 lpm (220 gpm)	2 (1)
8	Trommel Screen	Coarse	172 tonne/h (190 tph)	172 tonne/h (190 tph)	172 tonne/h (190 tph)	2 (0)

Equipment No.	Description	Type	Design Condition			Opr Qty. (Spares)
			D4A	D4B	D4C	
9	Rod Mill Discharge Tank with Agitator	Field erected	392,323 liters (103,640 gal)	391,642 liters (103,460 gal)	391,377 liters (103,390 gal)	2 (0)
10	Rod Mill Product Pumps	Centrifugal	3,407 lpm (900 gpm)	3,407 lpm (900 gpm)	3,407 lpm (900 gpm)	2 (2)
11	Slurry Storage Tank with Agitator	Field erected	1,176,894 liters (310,900 gal)	1,175,001 liters (310,400 gal)	1,174,244 liters (310,200 gal)	2 (0)
12	Slurry Recycle Pumps	Centrifugal	6,435 lpm (1,700 gpm)	6,435 lpm (1,700 gpm)	6,435 lpm (1,700 gpm)	2 (2)
13	Slurry Product Pumps	Positive displacement	3,407 lpm (900 gpm)	3,407 lpm (900 gpm)	3,407 lpm (900 gpm)	2 (2)

ACCOUNT 3 FEEDWATER AND MISCELLANEOUS SYSTEMS AND EQUIPMENT

Equipment No.	Description	Type	Design Condition			Opr Qty. (Spares)
			D4A	D4B	D4C	
1	Demineralized Water Storage Tank	Vertical, cylindrical, outdoor	1,093,984 liters (289,000 gal)	1,093,984 liters (289,000 gal)	1,093,984 liters (289,000 gal)	2 (0)
2	Condensate Pumps	Vertical canned	7,874 lpm @ 91 m H_2O (2,080 gpm @ 300 ft H_2O)	7,495 lpm @ 91 m H_2O (1,980 gpm @ 300 ft H_2O)	7,344 lpm @ 91 m H_2O (1,940 gpm @ 300 ft H_2O)	2 (1)
3	Deaerator (integral w/ HRSG)	Horizontal spray type	546,579 kg/hr (1,205,000 lb/hr)	549,754 kg/hr (1,212,000 lb/hr)	551,568 kg/hr (1,216,000 lb/hr)	2 (0)
4	Intermediate Pressure Feedwater Pump	Horizontal centrifugal, single stage	8,025 lpm @ 27 m H_2O (2,120 gpm @ 90 ft H_2O)	8,063 lpm @ 27 m H_2O (2,130 gpm @ 90 ft H_2O)	8,063 lpm @ 27 m H_2O (2,130 gpm @ 90 ft H_2O)	2 (1)
5	High Pressure Feedwater Pump No. 1	Barrel type, multi-stage, centrifugal	HP water: 6,057 lpm @ 1,859 m H_2O (1,600 gpm @ 6,100 ft H_2O)	HP water: 6,019 lpm @ 1,859 m H_2O (1,590 gpm @ 6,100 ft H_2O)	HP water: 6,019 lpm @ 1,859 m H_2O (1,590 gpm @ 6,100 ft H_2O)	2 (1)
6	High Pressure Feedwater Pump No. 2	Barrel type, multi-stage, centrifugal	IP water: 1,703 lpm @ 223 m H_2O (450 gpm @ 730 ft H_2O)	IP water: 1,741 lpm @ 223 m H_2O (460 gpm @ 730 ft H_2O)	IP water: 1,703 lpm @ 223 m H_2O (450 gpm @ 730 ft H_2O)	2 (1)
7	Auxiliary Boiler	Shop fabricated, water tube	18,144 kg/hr, 2.8 MPa, 343°C (40,000 lb/hr, 400 psig, 650°F)	18,144 kg/hr, 2.8 MPa, 343°C (40,000 lb/hr, 400 psig, 650°F)	18,144 kg/hr, 2.8 MPa, 343°C (40,000 lb/hr, 400 psig, 650°F)	1 (0)
8	Service Air Compressors	Flooded Screw	28 m^3/min @ 0.7 MPa (1,000 scfm @ 100 psig)	28 m^3/min @ 0.7 MPa (1,000 scfm @ 100 psig)	28 m^3/min @ 0.7 MPa (1,000 scfm @ 100 psig)	2 (1)
9	Instrument Air Dryers	Duplex, regenerative	28 m^3/min (1,000 scfm)	28 m^3/min (1,000 scfm)	28 m^3/min (1,000 scfm)	2 (1)
10	Closed Cylce Cooling Heat Exchangers	Plate and frame	362 GJ/hr (343.5076381 MMBtu/hr) each	375 GJ/hr (355.39736925 MMBtu/hr) each	380 GJ/hr (360.46720325 MMBtu/hr) each	2 (0)
11	Closed Cycle Cooling Water Pumps	Horizontal centrifugal	130,218 lpm @ 21 m H_2O (34,400 gpm @ 70 ft H_2O)	134,382 lpm @ 21 m H_2O (35,500 gpm @ 70 ft H_2O)	136,275 lpm @ 21 m H_2O (36,000 gpm @ 70 ft H_2O)	2 (1)
12	Engine-Driven Fire Pump	Vertical turbine, diesel engine	3,785 lpm @ 107 m H_2O (1,000 gpm @ 350 ft H_2O)	3,785 lpm @ 107 m H_2O (1,000 gpm @ 350 ft H_2O)	3,785 lpm @ 107 m H_2O (1,000 gpm @ 350 ft H_2O)	1 (1)
13	Fire Service Booster Pump	Two-stage horizontal centrifugal	2,650 lpm @ 76 m H_2O (700 gpm @ 250 ft H_2O)	2,650 lpm @ 76 m H_2O (700 gpm @ 250 ft H_2O)	2,650 lpm @ 76 m H_2O (700 gpm @ 250 ft H_2O)	1 (1)
14	Raw Water Pumps	Stainless steel, single suction	5,716 lpm @ 18 m H_2O (1,510 gpm @ 60 ft H_2O)	5,640 lpm @ 18 m H_2O (1,490 gpm @ 60 ft H_2O)	5,602 lpm @ 18 m H_2O (1,480 gpm @ 60 ft H_2O)	2 (1)
15	Ground Water Pumps	Stainless steel, single suction	2,839 lpm @ 268 m H_2O (750 gpm @ 880 ft H_2O)	2,801 lpm @ 268 m H_2O (740 gpm @ 880 ft H_2O)	2,801 lpm @ 268 m H_2O (740 gpm @ 880 ft H_2O)	3 (1)
16	Filtered Water Pumps	Stainless steel, single suction	3,369 lpm @ 49 m H_2O (890 gpm @ 160 ft H_2O)	3,331 lpm @ 49 m H_2O (880 gpm @ 160 ft H_2O)	3,331 lpm @ 49 m H_2O (880 gpm @ 160 ft H_2O)	2 (1)
17	Filtered Water Tank	Vertical, cylindrical	1,608,800 liter (425,000 gal)	1,605,015 liter (424,000 gal)	1,601,229 liter (423,000 gal)	2 (0)
18	Makeup Water Demineralizer	Anion, cation, and mixed bed	1,476 lpm (390 gpm)	1,476 lpm (390 gpm)	1,476 lpm (390 gpm)	2 (0)
19	Liquid Waste Treatment System		10 years, 24-hour storm	10 years, 24-hour storm	10 years, 24-hour storm	1 (0)

ACCOUNT 4 GASIFIER, ASU AND ACCESSORIES INCLUDING LOW TEMPERATURE HEAT RECOVERY

Equipment No.	Description	Type	Design Condition			Opr Qty. (Spares)
			D4A	D4B	D4C	
1	Gasifier	Pressurized slurry-feed, entrained bed	2,903 tonne/day, 5.6 MPa (3,200 tpd, 814.96 psia)	2,903 tonne/day, 5.6 MPa (3,200 tpd, 814.96 psia)	2,903 tonne/day, 5.6 MPa (3,200 tpd, 814.96 psia)	2 (0)
2	Synthesis Gas Cooler	Vertical downflow radiant heat exchanger with outlet quench chamber	255,826 kg/hr (564,000 lb/hr)	255,373 kg/hr (563,000 lb/hr)	255,373 kg/hr (563,000 lb/hr)	2 (0)
3	Synthesis Gas Cyclone	High efficiency	350,173 kg/hr (772,000 lb/hr) Design efficiency 90%	349,720 kg/hr (771,000 lb/hr) Design efficiency 90%	349,720 kg/hr (771,000 lb/hr) Design efficiency 90%	2 (0)
4	Candle Filter	Pressurized filter with pulse-jet cleaning	metallic filters	metallic filters	metallic filters	2 (0)
5	Syngas Scrubber Including Sour Water Stripper	Vertical upflow	350,173 kg/hr (772,000 lb/hr)	349,720 kg/hr (771,000 lb/hr)	349,720 kg/hr (771,000 lb/hr)	2 (0)
6	Raw Gas Coolers	Shell and tube with condensate drain	388,275 kg/hr (856,000 lb/hr)	387,368 kg/hr (854,000 lb/hr)	387,368 kg/hr (854,000 lb/hr)	8 (0)
7	Raw Gas Knockout Drum	Vertical with mist eliminator	304,360 kg/hr, 35°C, 5.2 MPa (671,000 lb/hr, 95°F, 750 psia)	303,907 kg/hr, 35°C, 5.2 MPa (670,000 lb/hr, 95°F, 750 psia)	303,453 kg/hr, 35°C, 5.2 MPa (669,000 lb/hr, 95°F, 750 psia)	2 (0)
8	Flare Stack	Self-supporting, carbon steel, stainless steel top, pilot ignition	350,173 kg/hr (772,000 lb/hr) syngas	349,720 kg/hr (771,000 lb/hr) syngas	349,720 kg/hr (771,000 lb/hr) syngas	2 (0)
9	ASU Main Air Compressor	Centrifugal, multi-stage	5,947 m^3/min @ 1.3 MPa (210,000 scfm @ 190 psia)	5,947 m^3/min @ 1.3 MPa (210,000 scfm @ 190 psia)	5,947 m^3/min @ 1.3 MPa (210,000 scfm @ 190 psia)	2 (0)
10	Cold Box	Vendor design	2,359 tonne/day (2,600 tpd) of 95% purity oxygen	2,359 tonne/day (2,600 tpd) of 95% purity oxygen	2,359 tonne/day (2,600 tpd) of 95% purity oxygen	2 (0)
11	Oxygen Compressor	Centrifugal, multi-stage	1,189 m^3/min (42,000 scfm) Suction - 0.9 MPa (130 psia) Discharge - 6.5 MPa (940 psia)	1,189 m^3/min (42,000 scfm) Suction - 0.9 MPa (130 psia) Discharge - 6.5 MPa (940 psia)	1,189 m^3/min (42,000 scfm) Suction - 0.9 MPa (130 psia) Discharge - 6.5 MPa (940 psia)	2 (0)
12	Primary Nitrogen Compressor	Centrifugal, multi-stage	3,794 m^3/min (134,000 scfm) Suction - 0.4 MPa (60 psia) Discharge - 2.7 MPa (390 psia)	3,936 m^3/min (139,000 scfm) Suction - 0.4 MPa (60 psia) Discharge - 2.7 MPa (390 psia)	3,964 m^3/min (140,000 scfm) Suction - 0.4 MPa (60 psia) Discharge - 2.7 MPa (390 psia)	2 (0)
13	Secondary Nitrogen Compressor	Centrifugal, single-stage	538 m^3/min (19,000 scfm) Suction - 1.2 MPa (180 psia) Discharge - 2.7 MPa (390 psia)	538 m^3/min (19,000 scfm) Suction - 1.2 MPa (180 psia) Discharge - 2.7 MPa (390 psia)	538 m^3/min (19,000 scfm) Suction - 1.2 MPa (180 psia) Discharge - 2.7 MPa (390 psia)	2 (0)
14	Syngas Dilution Nitrogen Boost Compressor	Centrifugal, single-stage	1,982 m^3/min (70,000 scfm) Suction - 2.6 MPa (380 psia) Discharge - 3.2 MPa (470 psia)	2,095 m^3/min (74,000 scfm) Suction - 2.6 MPa (380 psia) Discharge - 3.2 MPa (470 psia)	2,152 m^3/min (76,000 scfm) Suction - 2.6 MPa (380 psia) Discharge - 3.2 MPa (470 psia)	2 (0)

ACCOUNT 5A SYNGAS CLEANUP

Equipment No.	Description	Type	Design Condition			Opr Qty. (Spares)
			D4A	D4B	D4C	
1	Mercury Adsorber	Sulfated carbon bed	303,907 kg/hr (670,000 lb/hr) 35°C (95°F) 5.1 MPa (745 psia)	303,453 kg/hr (669,000 lb/hr) 35°C (95°F) 5.1 MPa (745 psia)	303,000 kg/hr (668,000 lb/hr) 35°C (95°F) 5.1 MPa (745 psia)	2 (0)
2	Sulfur Plant	Claus type	146 tonne/day (161 tpd)	146 tonne/day (160 tpd)	146 tonne/day (160 tpd)	1 (0)
3	Water Gas Shift Reactors	Fixed bed, catalytic	388,275 kg/hr (856,000 lb/hr) 227°C (440°F) 5.4 MPa (790 psia)	387,368 kg/hr (854,000 lb/hr) 227°C (440°F) 5.4 MPa (790 psia)	387,368 kg/hr (854,000 lb/hr) 227°C (440°F) 5.4 MPa (790 psia)	4 (0)

Equipment No.	Description	Type	Design Condition			Opr Qty. (Spares)
			D4A	D4B	D4C	
4	Shift Reactor Heat Recovery Exchangers	Shell and Tube	Exchanger 1: 157 GJ/hr (149 MMBtu/hr) Exchanger 2: 3 GJ/hr (3 MMBtu/hr)	Exchanger 1: 157 GJ/hr (149 MMBtu/hr) Exchanger 2: 3 GJ/hr (3 MMBtu/hr)	Exchanger 1: 157 GJ/hr (149 MMBtu/hr) Exchanger 2: 3 GJ/hr (3 MMBtu/hr)	4 (0)
5	Acid Gas Removal Plant	Two-stage Selexol	310,711 kg/hr (685,000 lb/hr) 35°C (95°F) 5.1 MPa (740 psia)	324,772 kg/hr (716,000 lb/hr) 34°C (94°F) 5.1 MPa (740 psia)	330,669 kg/hr (729,000 lb/hr) 34°C (93°F) 5.1 MPa (740 psia)	2 (0)
6	Hydrogenation Reactor	Fixed bed, catalytic	18,095 kg/hr (39,892 lb/hr) 232°C (450°F) 0.1 MPa (12.3 psia)	47,591 kg/hr (104,920 lb/hr) 232°C (450°F) 0.1 MPa (12.3 psia)	59,856 kg/hr (131,960 lb/hr) 232°C (450°F) 0.1 MPa (12.3 psia)	1 (0)
7	Tail Gas Recycle Compressor	Centrifugal	13,779 kg/hr (30,378 lb/hr)	43,068 kg/hr (94,949 lb/hr)	55,244 kg/hr (121,793 lb/hr)	1 (0)

ACCOUNT 5B CO_2 COMPRESSION

Equipment No.	Description	Type	Design Condition			Opr Qty. (Spares)
			D4A	D4B	D4C	
1	CO_2 Compressor	Integrally geared, multi-stage centrifugal	1,133 m^3/min @ 15.3 MPa (40,000 scfm @ 2,215 psia)	1,189 m^3/min @ 15.3 MPa (42,000 scfm @ 2,215 psia)	1,212 m^3/min @ 15.3 MPa (42,800 scfm @ 2,215 psia)	4 (0)

ACCOUNT 6 COMBUSTION TURBINE AND AUXILIARIES

Equipment No.	Description	Type	Design Condition			Opr Qty. (Spares)
			D4A	D4B	D4C	
1	Gas Turbine	Advanced F class	230 MW	230 MW	230 MW	2 (0)
2	Gas Turbine Generator	TEWAC	260 MVA @ 0.9 p.f., 24 kV, 60 Hz, 3-phase	260 MVA @ 0.9 p.f., 24 kV, 60 Hz, 3-phase	260 MVA @ 0.9 p.f., 24 kV, 60 Hz, 3-phase	2 (0)
3	Syngas Expansion Turbine/Generator	Turbo Expander	49,578 kg/h (109,300 lb/h) 5.0 MPa (720 psia) Inlet 3.2 MPa (460 psia) Outlet	36,333 kg/h (80,100 lb/h) 5.0 MPa (720 psia) Inlet 3.2 MPa (460 psia) Outlet	30,799 kg/h (67,900 lb/h) 5.0 MPa (720 psia) Inlet 3.2 MPa (460 psia) Outlet	2 (0)

ACCOUNT 7 HRSG, DUCTING, AND STACK

Equipment No.	Description	Type	Design Condition			Opr Qty. (Spares)
			D4A	D4B	D4C	
1	Stack	CS plate, type 409SS liner	76 m (250 ft) high x 8.5 m (28 ft) diameter	76 m (250 ft) high x 8.5 m (28 ft) diameter	76 m (250 ft) high x 8.5 m (28 ft) diameter	1 (0)
2	Heat Recovery Steam Generator	Drum, multi-pressure with economizer section and integral deaerator	Main steam - 341,834 kg/hr, 12.4 MPa/534°C (753,614 lb/hr, 1,800 psig/994°F) Reheat steam - 336,639 kg/hr, 3.1 MPa/534°C (742,162 lb/hr, 452 psig/994°F)	Main steam - 340,240 kg/hr, 12.4 MPa/533°C (750,102 lb/hr, 1,800 psig/991°F) Reheat steam - 335,536 kg/hr, 3.1 MPa/533°C (739,731 lb/hr, 452 psig/991°F)	Main steam - 339,679 kg/hr, 12.4 MPa/532°C (748,864 lb/hr, 1,800 psig/990°F) Reheat steam - 334,930 kg/hr, 3.1 MPa/532°C (738,395 lb/hr, 452 psig/990°F)	2 (0)

ACCOUNT 8 STEAM TURBINE GENERATOR AND AUXILIARIES

Equipment No.	Description	Type	Design Condition			Opr Qty. (Spares)
			D4A	D4B	D4C	
1	Steam Turbine	Commercially available advanced steam turbine	278 MW 12.4 MPa/534°C/534°C (1,800 psig/ 994°F/994°F)	270 MW 12.4 MPa/533°C/533°C (1,800 psig/ 991°F/991°F)	267 MW 12.4 MPa/532°C/532°C (1,800 psig/ 990°F/990°F)	1 (0)
2	Steam Turbine Generator	Hydrogen cooled, static excitation	310 MVA @ 0.9 p.f., 24 kV, 60 Hz, 3-phase	300 MVA @ 0.9 p.f., 24 kV, 60 Hz, 3-phase	300 MVA @ 0.9 p.f., 24 kV, 60 Hz, 3-phase	1 (0)
3	Steam Bypass	One per HRSG	50% steam flow @ design steam conditions	50% steam flow @ design steam conditions	50% steam flow @ design steam conditions	2 (0)
4	Surface Condenser	Single pass, divided waterbox including vacuum pumps	1,667 GJ/hr (1,580 MMBtu/hr), Inlet water temperature 16°C (60°F), Water temperature rise 11°C (20°F)	1,583 GJ/hr (1,500 MMBtu/hr), Inlet water temperature 16°C (60°F), Water temperature rise 11°C (20°F)	1,540 GJ/hr (1,460 MMBtu/hr), Inlet water temperature 16°C (60°F), Water temperature rise 11°C (20°F)	1 (0)

ACCOUNT 9 COOLING WATER SYSTEM

Equipment No.	Description	Type	Design Condition			Opr Qty. (Spares)
			D4A	D4B	D4C	
1	Circulating Water Pumps	Vertical, wet pit	461,820 lpm @ 30 m (122,000 gpm @ 100 ft)	458,035 lpm @ 30 m (121,000 gpm @ 100 ft)	454,249 lpm @ 30 m (120,000 gpm @ 100 ft)	2 (1)
2	Cooling Tower	Evaporative, mechanical draft, multi-cell	11°C (51.5°F) wet bulb / 16°C (60°F) CWT / 27°C (80°F) HWT / 2,585 GJ/hr (2,450 MMBtu/hr) heat duty	11°C (51.5°F) wet bulb / 16°C (60°F) CWT / 27°C (80°F) HWT / 2,543 GJ/hr (2,410 MMBtu/hr) heat duty	11°C (51.5°F) wet bulb / 16°C (60°F) CWT / 27°C (80°F) HWT / 2,532 GJ/hr (2,400 MMBtu/hr) heat duty	1 (0)

ACCOUNT 10 SLAG RECOVERY AND HANDLING

Equipment No.	Description	Type	Design Condition			Opr Qty. (Spares)
			D4A	D4B	D4C	
1	Slag Quench Tank	Water bath	253,623 liters (67,000 gal)	253,623 liters (67,000 gal)	253,623 liters (67,000 gal)	2 (0)
2	Slag Crusher	Roll	14 tonne/hr (15 tph)	14 tonne/hr (15 tph)	14 tonne/hr (15 tph)	2 (0)
3	Slag Depressurizer	Lock Hopper	14 tonne/hr (15 tph)	14 tonne/hr (15 tph)	14 tonne/hr (15 tph)	2 (0)
4	Slag Receiving Tank	Horizontal, weir	151,416 liters (40,000 gal)	151,416 liters (40,000 gal)	151,416 liters (40,000 gal)	2 (0)
5	Black Water Overflow Tank	Shop fabricated	68,137 liters (18,000 gal)	68,137 liters (18,000 gal)	68,137 liters (18,000 gal)	2 (0)
6	Slag Conveyor	Drag chain	14 tonne/hr (15 tph)	14 tonne/hr (15 tph)	14 tonne/hr (15 tph)	2 (0)
7	Slag Separation Screen	Vibrating	14 tonne/hr (15 tph)	14 tonne/hr (15 tph)	14 tonne/hr (15 tph)	2 (0)
8	Coarse Slag Conveyor	Belt/bucket	14 tonne/hr (15 tph)	14 tonne/hr (15 tph)	14 tonne/hr (15 tph)	2 (0)
9	Fine Ash Settling Tank	Vertical, gravity	215,768 liters (57,000 gal)	215,768 liters (57,000 gal)	215,768 liters (57,000 gal)	2 (0)
10	Fine Ash Recycle Pumps	Horizontal centrifugal	38 lpm @ 14 m H_2O (10 gpm @ 46 ft H_2O)	38 lpm @ 14 m H_2O (10 gpm @ 46 ft H_2O)	38 lpm @ 14 m H_2O (10 gpm @ 46 ft H_2O)	2 (2)
11	Grey Water Storage Tank	Field erected	68,137 liters (18,000 gal)	68,137 liters (18,000 gal)	68,137 liters (18,000 gal)	2 (0)
12	Grey Water Pumps	Centrifugal	227 lpm @ 564 m H_2O (60 gpm @ 1,850 ft H_2O)	227 lpm @ 564 m H_2O (60 gpm @ 1,850 ft H_2O)	227 lpm @ 564 m H_2O (60 gpm @ 1,850 ft H_2O)	2 (2)

Equipment No.	Description	Type	Design Condition			Opr Qty. (Spares)
			D4A	D4B	D4C	
13	Slag Storage Bin	Vertical, field erected	998 tonne (1,100 tons)	998 tonne (1,100 tons)	998 tonne (1,100 tons)	2 (0)
14	Unloading Equipment	Telescoping chute	109 tonne/hr (120 tph)	109 tonne/hr (120 tph)	109 tonne/hr (120 tph)	1 (0)

ACCOUNT 11 ACCESSORY ELECTRIC PLANT

Equipment No.	Description	Type	Design Condition			Opr Qty. (Spares)
			D4A	D4B	D4C	
1	CTG Step-up Transformer	Oil-filled	24 kV/345 kV, 260 MVA, 3-ph, 60 Hz	24 kV/345 kV, 260 MVA, 3-ph, 60 Hz	24 kV/345 kV, 260 MVA, 3-ph, 60 Hz	2 (0)
2	STG Step-up Transformer	Oil-filled	24 kV/345 kV, 310 MVA, 3-ph, 60 Hz	24 kV/345 kV, 300 MVA, 3-ph, 60 Hz	24 kV/345 kV, 300 MVA, 3-ph, 60 Hz	1 (0)
3	High Voltage Auxiliary Transformer	Oil-filled	345 kV/13.8 kV, 80 MVA, 3-ph, 60 Hz	345 kV/13.8 kV, 82 MVA, 3-ph, 60 Hz	345 kV/13.8 kV, 82 MVA, 3-ph, 60 Hz	2 (0)
4	Medium Voltage Auxiliary Transformer	Oil-filled	24 kV/4.16 kV, 48 MVA, 3-ph, 60 Hz	24 kV/4.16 kV, 53 MVA, 3-ph, 60 Hz	24 kV/4.16 kV, 55 MVA, 3-ph, 60 Hz	1 (1)
5	Low Voltage Transformer	Dry ventilated	4.16 kV/480 V, 7 MVA, 3-ph, 60 Hz	4.16 kV/480 V, 8 MVA, 3-ph, 60 Hz	4.16 kV/480 V, 8 MVA, 3-ph, 60 Hz	1 (1)
6	CTG Isolated Phase Bus Duct and Tap Bus	Aluminum, self-cooled	24 kV, 3-ph, 60 Hz	24 kV, 3-ph, 60 Hz	24 kV, 3-ph, 60 Hz	2 (0)
7	STG Isolated Phase Bus Duct and Tap Bus	Aluminum, self-cooled	24 kV, 3-ph, 60 Hz	24 kV, 3-ph, 60 Hz	24 kV, 3-ph, 60 Hz	1 (0)
8	Medium Voltage Switchgear	Metal clad	4.16 kV, 3-ph, 60 Hz	4.16 kV, 3-ph, 60 Hz	4.16 kV, 3-ph, 60 Hz	1 (1)
9	Low Voltage Switchgear	Metal enclosed	480 V, 3-ph, 60 Hz	480 V, 3-ph, 60 Hz	480 V, 3-ph, 60 Hz	1 (1)
10	Emergency Diesel Generator	Sized for emergency shutdown	750 kW, 480 V, 3-ph, 60 Hz	750 kW, 480 V, 3-ph, 60 Hz	750 kW, 480 V, 3-ph, 60 Hz	1 (0)

ACCOUNT 12 INSTRUMENTATION AND CONTROL

Equipment No.	Description	Type	Design Condition			Opr Qty. (Spares)
			D4A	D4B	D4C	
1	DCS - Main Control	Monitor/keyboard; Operator printer (laser color); Engineering printer (laser B&W)	Operator stations/printers and engineering stations/printers	Operator stations/printers and engineering stations/printers	Operator stations/printers and engineering stations/printers	1 (0)
2	DCS - Processor	Microprocessor with redundant input/output	N/A	N/A	N/A	1 (0)
3	DCS - Data Highway	Fiber optic	Fully redundant, 25% spare	Fully redundant, 25% spare	Fully redundant, 25% spare	1 (0)

4.3.5 Economic Analysis for the GEE IGCC Cases

The capital and operating costs for Case 2 Designs 1-4 are presented in Section 4.3.6. A cost and performance summary table (Exhibit 4-162) for the GEE IGCC cases is shown in Section 4.3.7.

4.3.6 Capital and Operating Cost Results

The capital and operating costs for Case 2 Designs 1-4 are shown in Exhibit 4-134 through Exhibit 4-161. The capital costs for each case include the total plant cost (TPC), the owner's costs, the total overnight cost (TOC), and the total as-spent capital (TASC) cost. The capital and operating cost estimating methodology is explained in Section 2.7.

Exhibit 4-134 Case 2 D1A (0%) Capital Costs

Department:	NETL Office of Systems Analysis and Planning			**Cost Base:**	1-Jun-07
Project:	CO2 Capture Sensitivity Analysis			**Prepared:**	14-Jun-10
Case:	Case 2 D1A - GEE IGCC w/o WGS (0% CO2 Capture)				**x $1, 000**
Plant Size:	622.05 MW, net	Capital Charge Factor 0.1773	Capacity Factor 0.8		

Acct No.	Item/Description	Equipment Cost	Material Cost	Labor Direct	Labor Indirect	Bare Erected	Eng'g CM H.O. & %	Eng'g CM H.O. & Total	Process Cont. %	Process Cont. Total	Project Cont. %	Project Cont. Total	TOTAL PLANT COST $	TOTAL PLANT COST $/kW
1	COAL HANDLING SYSTEM													
1.1	Coal Receive & Unload	$3,653	$0	$1,785	0	5,439	9.0%	$487	0%	0	20.0%	$1,185	7,111	11
1.2	Coal Stackout & Reclaim	$4,721	$0	$1,144	0	5,865	8.8%	$514	0%	0	20.0%	$1,276	7,655	12
1.3	Coal Conveyors & Yd Crus	$4,389	$0	$1,132	0	5,522	8.8%	$485	0%	0	20.0%	$1,201	7,207	12
1.4	Other Coal Handling	$1,148	$0	$262	0	1,410	8.8%	$123	0%	0	20.0%	$307	1,840	3
1.5	Sorbent Receive & Unload	$0	$0	$0	0	0	0.0%	$0	0%	0	0.0%	$0	0	0
1.6	Sorbent Stackout & Reclaim	$0	$0	$0	0	0	0.0%	$0	0%	0	0.0%	$0	0	0
1.7	Sorbent Conveyors	$0	$0	$0	0	0	0.0%	$0	0%	0	0.0%	$0	0	0
1.8	Other Sorbent Handling	$0	$0	$0	0	0	0.0%	$0	0%	0	0.0%	$0	0	0
1.9	Coal & Sorbent Hnd.Foundations	$0	$2,585	$6,464	0	9,049	9.6%	$867	0%	0	20.0%	$1,983	11,900	19
	SUBTOTAL 1.	**$13,912**	**$2,585**	**$10,788**	**$0**	**$27,285**		**$2,477**		**$0**		**$5,952**	**$35,714**	**$57**
2	COAL PREP & FEED SYSTEMS													
2.1	Coal Crushing & Drying	w/ 2.3	$0	w/ 2.3	0	0	0.0%	$0	0%	0	0.0%	$0	0	0
2.2	Prepared Coal Storage & Feed	$1,558	$373	$244	0	2,175	8.6%	$186	0%	0	20.0%	$472	2,833	5
2.3	Slurry Prep & Feed	$21,299	$0	$9,398	0	30,697	9.1%	$2,789	5%	$1,535	20.0%	$7,004	42,025	68
2.4	Misc. Coal Prep & Feed	$857	$623	$1,869	0	3,349	9.2%	$308	0%	0	20.0%	$731	4,388	7
2.5	Sorbent Prep Equipment	$0	$0	$0	0	0	0.0%	$0	0%	0	0.0%	$0	0	0
2.6	Sorbent Storage & Feed	$0	$0	$0	0	0	0.0%	$0	0%	0	0.0%	$0	0	0
2.7	Sorbent Injection System	$0	$0	$0	0	0	0.0%	$0	0%	0	0.0%	$0	0	0
2.8	Booster Air Supply System	$0	$0	$0	0	0	0.0%	$0	0%	0	0.0%	$0	0	0
2.9	Coal & Sorbent Feed Foundation	$0	$3,330	$2,734	0	6,063	9.3%	$562	0%	0	20.0%	$1,325	7,950	13
	SUBTOTAL 2.	**$23,713**	**$4,326**	**$14,245**	**$0**	**$42,284**		**$3,844**		**$1,535**		**$9,533**	**$57,195**	**$92**
3	FEEDWATER & MISC. BOP SYSTEMS													
3.1	Feedwater System	$2,896	$4,974	$2,626	0	10,496	9.3%	$972	0%	0	20.0%	2,294	13,762	22
3.2	Water Makeup & Pretreating	$620	$65	$347	0	1,031	9.5%	$98	0%	0	30.0%	339	1,469	2
3.3	Other Feedwater Subsystems	$1,585	$536	$482	0	2,602	9.0%	$234	0%	0	20.0%	567	3,403	5
3.4	Service Water Systems	$355	$731	$2,536	0	3,621	9.8%	$353	0%	0	30.0%	1,192	5,167	8
3.5	Other Boiler Plant Systems	$1,904	$738	$1,829	0	4,471	9.5%	$424	0%	0	20.0%	979	5,874	9
3.6	FO Supply Sys & Nat Gas	$315	$596	$556	0	1,467	9.6%	$141	0%	0	20.0%	322	1,930	3
3.7	Waste Treatment Equipment	$867	$0	$529	0	1,395	9.7%	$136	0%	0	30.0%	459	1,991	3
3.8	Misc. Power Plant Equipment	$1,080	$145	$554	0	1,779	9.7%	$172	0%	0	30.0%	585	2,536	4
	SUBTOTAL 3.	**$9,622**	**$7,783**	**$9,458**	**$0**	**$26,863**		**$2,531**		**$0**		**$6,737**	**$36,131**	**$58**
4	GASIFIER & ACCESSORIES													
4.1	Syngas Cooler Gasifier System	$111,116	$0	$60,871	0	171,987	9.2%	$15,755	13.9%	$23,878	15.3%	$32,445	244,065	392
4.2	Syngas Cooler (w/ Gasifier - $)	w/4.1	$0	w/4.1	0	0	0.0%	$0	0%	0	0.0%	$0	0	0
4.3	ASU/Oxidant Compression	$160,703	$0	w/equip.	0	160,703	9.7%	$15,577	0%	0	10.0%	$17,628	193,908	312
4.4	Scrubber & Low Temperature Cooling	$5,873	$4,781	$4,975	0	15,629	9.6%	$1,501	0%	0	20.0%	$3,426	20,556	33
4.5	Black Water & Sour Gas Section	w/4.1	$0	w/4.1	0	0	0.0%	$0	0%	0	0.0%	$0	0	0
4.6	Other Gasification Equipment	$1,791	$0	$1,681	0	3,472	12.0%	$417	0%	0	24.4%	$948	4,837	8
4.7	Major Component Rigging	w/4.1&4.2	$0	w/4.1&4.2	0	0	0.0%	$0	0%	0	0.0%	$0	0	0
4.8	Gasification Foundations	$0	$6,486	$5,414	0	11,900	9.3%	$1,103	0%	0	25.0%	$3,251	16,253	26
	SUBTOTAL 4.	**$279,483**	**$11,266**	**$72,942**	**$0**	**$363,691**		**$34,352**		**$23,878**		**$57,697**	**$479,618**	**$771**

Exhibit 4-134 Case 2 D1A (0%) Capital Costs (continued)

		Department:	NETL Office of Systems Analysis and Planning									**Cost Base:**	1-Jun-07	
		Project:	CO2 Capture Sensitivity Analysis									**Prepared:**	14-Jun-10	
		Case:	Case 2 D1A - GEE IGCC w/o WGS (0% CO2 Capture)										**x $1, 000**	
		Plant Size:	622.05	MW, net			Capital Charge Factor	0.1773	Capacity Factor	0.8				
			Equipment	**Material**	**Labor**		**Bare**	**Eng'g CM H.O. &**		**Process Cont.**		**Project Cont.**	**TOTAL PLANT COST**	
Acct No.		**Item/Description**	**Cost**	**Cost**	**Direct**	**Indirect**	**Erected**	**%**	**Total**	**%**	**Total**	**%**	**Total**	**$**	**$/kW**
5A		GAS CLEANUP & PIPING							*						
	5A.1	Single Stage Selexol	$41,961	$0	$35,605	0	77,565	9.7%	$7,501	0%	0	20.0%	17,013	102,080	164
	5A.2	Elemental Sulfur Plant	$10,055	$2,004	$12,972	0	25,031	9.7%	$2,431	0%	0	20.0%	5,493	32,955	53
	5A.3	Mercury Removal	$1,057	$0	$804	0	1,862	9.7%	$180	5%	93	20.0%	427	2,561	4
	5A.4	COS Hydrolysis	$3,575	$0	$4,668	0	8,243	9.7%	$801	0%	0	20.0%	1,809	10,853	17
	5A.5	Particulate Removal	$0	$0	$0	0	0	0.0%	$0	0%	0	20.0%	0	0	0
	5A.6	Blowback Gas Systems	$1,310	$0	$248	0	1,558	12.2%	$190	0%	0	20.0%	350	2,098	3
	5A.7	Fuel Gas Piping	$0	$688	$482	0	1,170	9.3%	$108	0%	0	20.0%	256	1,534	2
	5A.9	HGCU Foundations	$0	$1,108	$714	0	1,822	9.2%	$167	0%	0	30.0%	597	2,586	4
	5.9	Open	0	0	0	0	0	0.0%	0	0%	0	20.0%	0	0	0
		SUBTOTAL 5A.	**$57,957**	**$3,800**	**$55,494**	**$0**	**$117,251**		**$11,380**		**$93**		**$25,944**	**$154,668**	**$249**
5B		CO2 REMOVAL & COMPRESSION													
	5B.1	CO2 Removal System	0	0	0	0	0	10%	0	0%	0	0.0%	0	0	0
	5B.2	CO2 Compression & Drying	0	0	0	0	0	10%	0	0%	0	20.0%	0	0	0
	5B.3	CO2 Pipeline											0	0	0
	5B.4	CO2 Storage											0	0	0
	5B.5	CO2 Monitoring											0	0	0
		SUBTOTAL 5B.	**$0**	**$0**	**$0**	**$0**	**$0**		**$0**		**$0**		**$0**	**$0**	**$0**
6		COMBUSTION TURBINE/ACCESSORIES													
	6.1	Combustion Turbine Generator	$85,752	$0	$6,269	0	92,021	9.5%	$8,724	5%	4,601	10.0%	10,535	115,881	186
	6.2	Syngas Expander	$5,928	$0	$819	0	6,747	9.5%	$641	0%	0	15.0%	1,108	8,496	14
	6.3	Compressed Air Piping	$0	$0	$0	0	0	0.0%	$0	0%	0	0.0%	0	0	0
	6.4	Combustion Turbine Foundations	$0	$887	$982	0	1,868	9.4%	$175	0%	0	30.0%	613	2,656	4
		SUBTOTAL 6.	**$91,679**	**$887**	**$8,070**	**$0**	**$100,636**		**$9,540**		**$4,601**		**$12,256**	**$127,033**	**$204**
7		HRSG, DUCTING & STACK													
	7.1	Heat Recovery Steam Generator	$35,357	$0	$5,027	0	40,384	9.5%	$3,840	0%	0	10.0%	4,422	48,646	78
	7.2	Open	$0	$0	$0	0	0	0.0%	$0	0%	0	0.0%	0	0	0
	7.3	Ductwork	$0	$1,706	$1,217	0	2,923	8.8%	$256	0%	0	20.0%	636	3,816	6
	7.4	Stack	$3,329	$0	$1,250	0	4,579	9.6%	$439	0%	0	10.0%	502	5,519	9
	7.5	HRSG,Duct & Stack Foundations	$0	$667	$640	0	1,307	9.3%	$122	0%	0	30.0%	429	1,858	3
		SUBTOTAL 7.	**$38,685**	**$2,373**	**$8,136**	**$0**	**$49,194**		**$4,657**		**$0**		**$5,989**	**$59,839**	**$96**
8		STEAM TURBINE GENERATOR													
	8.1	Steam TG & Accessories	$29,111	$0	$4,994	0	34,104	9.6%	$3,272	0%	0	10.0%	3,738	41,114	66
	8.2	Turbine Plant Auxiliaries	$202	$0	$463	0	665	9.8%	$65	0%	0	10.0%	73	803	1
	8.3	Condenser & Auxiliaries	$5,053	$0	$1,484	0	6,537	9.6%	$625	0%	0	10.0%	716	7,878	13
	8.4	Steam Piping	$5,117	$0	$3,600	0	8,717	8.6%	$749	0%	0	25.0%	2,367	11,833	19
	8.5	TG Foundations	$0	$1,001	$1,693	0	2,694	9.5%	$255	0%	0	30.0%	885	3,835	6
		SUBTOTAL 8.	**$39,483**	**$1,001**	**$12,233**	**$0**	**$52,718**		**$4,967**		**$0**		**$7,778**	**$65,462**	**$105**
9		COOLING WATER SYSTEM													
	9.1	Cooling Towers	$6,699	$0	$1,219	0	7,918	9.5%	$754	0%	0	15.0%	1,301	9,973	16
	9.2	Circulating Water Pumps	$1,737	$0	$122	0	1,859	8.4%	$157	0%	0	15.0%	302	2,318	4
	9.3	Circ. Water System Auxiliaries	$147	$0	$21	0	168	9.5%	$16	0%	0	15.0%	28	211	0
	9.4	Circ. Water Piping	$0	$6,124	$1,588	0	7,712	9.0%	$697	0%	0	20.0%	1,682	10,090	16
	9.5	Make-up Water System	$343	$0	$490	0	833	9.6%	$80	0%	0	20.0%	183	1,096	2
	9.6	Component Cooling Water System	$723	$865	$615	0	2,203	9.4%	$206	0%	0	20.0%	482	2,891	5
	9.9	Circ. Water System Foundations	$0	$2,248	$3,822	0	6,071	9.5%	$576	0%	0	30.0%	1,994	8,640	14
		SUBTOTAL 9.	**$9,649**	**$9,237**	**$7,877**	**$0**	**$26,763**		**$2,486**		**$0**		**$5,971**	**$35,220**	**$57**

Exhibit 4-134 Case 2 D1A (0%) Capital Costs (continued)

Department:	NETL Office of Systems Analysis and Planning			**Cost Base:**	1-Jun-07
Project:	CO2 Capture Sensitivity Analysis			**Prepared:**	14-Jun-10
Case:	Case 2 D1A - GEE IGCC w/o WGS (0% CO2 Capture)				**x $1, 000**
Plant Size:	622.05 MW, net	Capital Charge Factor 0.1773	Capacity Factor 0.8		

Acct No.	Item/Description	Equipment Cost	Material Cost	Labor Direct	Labor Indirect	Bare Erected	Eng'g CM H.O. & %	Eng'g CM H.O. & Total	Process Cont. %	Process Cont. Total	Project Cont. %	Project Cont. Total	TOTAL PLANT COST $	TOTAL PLANT COST $/kW
10	ASH/SPENT SORBENT HANDLING SYS													
10.1	Slag Dewatering & Cooling	$11,822	$6,519	$13,243	0	31,584	9.7%	$3,048	0%	0	10.0%	3,463	38,095	61
10.2	Gasifier Ash Depressurization	w/10.1	w/10.1	w/10.1	0	0	0.0%	$0	0%	0	0.0%	0	0	0
10.3	Cleanup Ash Depressurization	w/10.1	w/10.1	w/10.1	0	0	0.0%	$0	0%	0	0.0%	0	0	0
10.4	High Temperature Ash Piping	$0	$0	$0	0	0	0.0%	$0	0%	0	0.0%	0	0	0
10.5	Other Ash Recovery Equipment	$0	$0	$0	0	0	0.0%	$0	0%	0	0.0%	0	0	0
10.6	Ash Storage Silos	$575	$0	$626	0	1,201	9.7%	$116	0%	0	15.0%	198	1,515	2
10.7	Ash Transport & Feed Equipment	$771	$0	$186	0	957	9.3%	$89	0%	0	15.0%	157	1,204	2
10.8	Misc. Ash Handling Equipment	$1,191	$1,460	$436	0	3,087	9.5%	$294	0%	0	15.0%	507	3,888	6
10.9	Ash/Spent Sorbent Foundation	$0	$51	$64	0	115	9.4%	$11	0%	0	30.0%	38	163	0
	SUBTOTAL 10.	**$14,359**	**$8,029**	**$14,555**	**$0**	**$36,943**		**$3,559**		**$0**		**$4,363**	**$44,864**	**$72**
11	ACCESSORY ELECTRIC PLANT													
11.1	Generator Equipment	$958	$0	$947	0	1,905	9.5%	$182	0%	0	10.0%	209	2,296	4
11.2	Station Service Equipment	$3,920	$0	$353	0	4,273	9.2%	$394	0%	0	10.0%	467	5,134	8
11.3	Switchgear & Motor Control	$7,247	$0	$1,318	0	8,565	9.3%	$794	0%	0	15.0%	1,404	10,763	17
11.4	Conduit & Cable Tray	$0	$3,366	$11,106	0	14,472	9.7%	$1,400	0%	0	25.0%	3,968	19,840	32
11.5	Wire & Cable	$0	$6,432	$4,226	0	10,658	7.3%	$774	0%	0	25.0%	2,858	14,291	23
11.6	Protective Equipment	$0	$686	$2,496	0	3,182	9.8%	$311	0%	0	15.0%	524	4,017	6
11.7	Standby Equipment	$236	$0	$230	0	466	9.5%	$44	0%	0	15.0%	77	587	1
11.8	Main Power Transformers	$15,862	$0	$146	0	16,008	7.6%	$1,211	0%	0	15.0%	2,583	19,801	32
11.9	Electrical Foundations	$0	$158	$416	0	574	9.6%	$55	0%	0	30.0%	189	818	1
	SUBTOTAL 11.	**$28,222**	**$10,643**	**$21,238**	**$0**	**$60,103**		**$5,165**		**$0**		**$12,277**	**$77,546**	**$125**
12	INSTRUMENTATION & CONTROL													
12.1	IGCC Control Equipment	w/4.1	$0	w/4.1	0	0	0.0%	$0	0%	0	0.0%	0	0	0
12.2	Combustion Turbine Control	w/6.1	$0	w/6.1	0	0	0.0%	$0	0%	0	0.0%	0	0	0
12.3	Steam Turbine Control	w/8.1	$0	w/8.1	0	0	0.0%	$0	0%	0	0.0%	0	0	0
12.4	Other Major Component Control	$1,012	$0	$676	0	1,687	9.5%	$160	5%	84	15.0%	290	2,221	4
12.5	Signal Processing Equipment	w/12.7	$0	w/12.7	0	0	0.0%	$0	0%	0	0.0%	0	0	0
12.6	Control Boards, Panels & Racks	$233	$0	$149	0	382	9.5%	$36	5%	19	20.0%	87	524	1
12.7	Computer Accessories	$5,397	$0	$173	0	5,570	9.2%	$511	5%	278	10.0%	636	6,995	11
12.8	Instrument Wiring & Tubing	$0	$1,885	$3,854	0	5,739	8.5%	$487	5%	287	25.0%	1,628	8,141	13
12.9	Other I & C Equipment	$3,608	$0	$1,752	0	5,359	9.4%	$504	5%	268	15.0%	920	7,051	11
	SUBTOTAL 12.	**$10,249**	**$1,885**	**$6,603**	**$0**	**$18,737**		**$1,698**		**$937**		**$3,561**	**$24,933**	**$40**
13	IMPROVEMENTS TO SITE													
13.1	Site Preparation	$0	$105	$2,246	0	2,351	9.9%	$233	0%	0	30.0%	775	3,360	5
13.2	Site Improvements	$0	$1,869	$2,483	0	4,352	9.9%	$429	0%	0	30.0%	1,435	6,216	10
13.3	Site Facilities	$3,349	$0	$3,534	0	6,883	9.9%	$679	0%	0	30.0%	2,268	9,830	16
	SUBTOTAL 13.	**$3,349**	**$1,974**	**$8,263**	**$0**	**$13,586**		**$1,341**		**$0**		**$4,478**	**$19,405**	**$31**

Exhibit 4-134 Case 2 D1A (0%) Capital Costs (continued)

Department:	NETL Office of Systems Analysis and Planning			**Cost Base:**	1-Jun-07
Project:	CO2 Capture Sensitivity Analysis			**Prepared:**	27-May-11
Case:	Case 2 D1A - GEE IGCC w/o WGS (0% CO2 Capture)				**x $1, 000**
Plant Size:	622.05 MW, net	Capital Charge Factor 0.1773	Capacity Factor 0.8		

Acct No.	Item/Description	Equipment Cost	Material Cost	Labor Direct	Labor Indirect	Bare Erected	Eng'g CM H.O. & %	Eng'g CM H.O. & Total	Process Cont. %	Process Cont. Total	Project Cont. %	Project Cont. Total	TOTAL PLANT COST $	TOTAL PLANT COST $/kW
14	BUILDINGS & STRUCTURES													
14.1	Combustion Turbine Area	$0	$265	$150	0	414	8.8%	$36	0%	0	20.0%	90	541	1
14.2	Steam Turbine Building	$0	$2,446	$3,484	0	5,930	9.2%	$546	0%	0	15.0%	971	7,447	12
14.3	Administration Building	$0	$845	$613	0	1,459	8.9%	$130	0%	0	15.0%	238	1,827	3
14.4	Circulation Water Pumphouse	$0	$167	$88	0	255	8.8%	$22	0%	0	15.0%	42	319	1
14.5	Water Treatment Buildings	$0	$518	$506	0	1,024	9.0%	$93	0%	0	15.0%	167	1,284	2
14.6	Machine Shop	$0	$433	$296	0	729	8.9%	$65	0%	0	15.0%	119	912	1
14.7	Warehouse	$0	$699	$451	0	1,149	8.9%	$102	0%	0	15.0%	188	1,439	2
14.8	Other Buildings & Structures	$0	$418	$326	0	744	8.9%	$66	0%	0	20.0%	162	973	2
14.9	Waste Treating Building & Str.	$0	$935	$1,787	0	2,723	9.3%	$254	0%	0	20.0%	595	3,572	6
	SUBTOTAL 14.	**$0**	**$6,725**	**$7,701**	**$0**	**$14,427**		**$1,314**		**$0**		**$2,573**	**$18,313**	**$29**
	Total Cost	**$620,363**	**$72,516**	**$257,603**	**$0**	**$950,481**		**$89,310**		**$31,044**		**$165,109**	**$1,235,944**	**$1,987**

Owner's Costs			
Preproduction Costs			
6 Months All Labor		$12,214	$20
1 Month Maintenance Materials		$2,742	$4
1 Month Non-fuel Consumables		$269	$0
1 Month Waste Disposal		$304	$0
25% of 1 Months Fuel Cost at 100% CF		$1,627	$3
2% of TPC		$24,719	$40
Total		$41,874	$67
Inventory Capital			
60 day supply of fuel and consumables at 100% CF		$13,552	$22
0.5% of TPC (spare parts)		$6,180	$10
Total		$19,732	$32
Initial Cost for Catalyst and Chemicals		$4,892	$8
Land		$900	$1
Other Owner's Costs		$185,392	$298
Financing Costs		$33,370	$54
Total Overnight Costs (TOC)		**$1,522,105**	**$2,446.9**
TASC Multiplier	(IOU, high risk, 35 year)	1.140	
Total As-Spent Cost (TASC)		**$1,735,200**	**$2,790**

Exhibit 4-135 Case 2 D1A Initial and Annual O&M Expenses

INITIAL & ANNUAL O&M EXPENSES			
Case:	Case 2 D1A - GEE IGCC w/o WGS (0% CO2 Capture)		
Plant Size (MWe):	622.05	**Heat Rate (Btu/kWh):**	8,756
Primary/Secondary Fuel:	Illinois #6 Bituminous Coal	**Fuel Cost ($/MM Btu):**	1.80
Design/Construction	5 years	**Book Life (yrs):**	30
TPC (Plant Cost) Year:	Jun-07	**TPI Year:**	2015
Capacity Factor (%):	80	**CO_2 Captured (TPD):**	0

OPERATING & MAINTENANCE LABOR

Operating Labor

Operating Labor Rate (base):	$34.65	$/hour
Operating Labor Burden:	30.00	% of base
Labor Overhead Charge:	25.00	% of labor

Operating Labor Requirements per Shift:	units/mod.	Total Plant
Skilled Operator	2.0	2.0
Operator	9.0	9.0
Foreman	1.0	1.0
Lab Tech's etc.	3.0	3.0
TOTAL Operating Jobs	15.0	15.0

	Annual Costs $	Annual Costs $/kW-net
Annual Operating Labor Cost (calc'd)	$5,918,913	$9.515
Maintenance Labor Cost (calc'd)	$13,622,877	$21.900
Administrative & Support Labor (calc'd)	$4,885,447	$7.854
Property Taxes and Insurance	$24,718,883	$39.738
TOTAL FIXED OPERATING COSTS	**$49,146,120**	**$79.007**

VARIABLE OPERATING COSTS

	$	$/kWh-net
Maintenance Material Costs (calc'd)	**$26,322,759**	**0.00604**

Consumables	Consumption Initial	Consumption /Day	Unit Cost	Initial Cost	$	$/kWh-net
Water (/1000 gallons)	0	3,409	1.08	$0	$1,076,793	0.00025
Chemicals						
MU & WT Chem. (lbs)	0	20,311	0.17	$0	$1,026,436	0.00024
Carbon (Mercury Removal) (lb)	54,833	75	1.05	$57,584	$23,034	0.00001
COS Catalyst (m3)	422	0.29	2,397.36	$1,011,578	$202,316	0.00005
Water Gas Shift Catalyst (ft3)	0	0	498.83	$0	$0	0.00000
Selexol Solution (gal)	285,358	45	13.40	$3,823,295	$175,961	0.00004
SCR Catalyst (m3)	0	0	0.00	$0	$0	0.00000
Ammonia (19% NH3) (ton)	0	0	0.00	$0	$0	0.00000
Claus Catalyst (ft3)	w/equip.	1.94	131.27	$0	$74,422	0.00002
Subtotal Chemicals				**$4,892,457**	**$1,502,168**	**0.00034**
Other						
Supplemental Fuel (MMBtu)	0	0	0.00	$0	$0	0.00000
Gases, N2 etc. (/100scf)	0	0.00	0.00	$0	$0	0.00000
L.P. Steam (/1000 pounds)	0	0	0.00	$0	$0	0.00000
Subtotal Other				**$0**	**$0**	**0.00000**
Waste Disposal						
Spent Mercury Sorbent (lb)	0	75	0.42	$0	$9,148	0.00000
Flyash (ton)	0	0	0.00	$0	$0	0.00000
Slag (ton)	0	615	16.23	$0	$2,912,403	0.00067
Subtotal Solid Waste Disposal				**$0**	**$2,921,551**	**0.00067**
By-products & Emissions						
Sulfur (tons)	0	140	0.00	$0	$0	0.00000
Subtotal By-Products				**$0**	**$0**	**0.00000**
TOTAL VARIABLE OPERATING COSTS					**$31,823,271**	**0.00730**
Coal FUEL (tons)	**0**	**5,603**	**38.19**	**$0**	**$62,471,741**	**0.01433**

Exhibit 4-136 Case 2 D1B (25%) Capital Costs

Department:	NETL Office of Systems Analysis and Planning			**Cost Base:**	Jun 2007
Project:	CO2 Capture Sensitivity Systems Analysis			**Prepared:**	14-Jun-10
Case:	Case 2 D1B - GEE IGCC w/o WGS (25% CO2 Capture)				**x $1, 000**
Plant Size:	607.19 MW, net	Capital Charge Factor 0.1773	Capacity Factor 0.8		

Acct No.	Item/Description	Equipment Cost	Material Cost	Labor Direct	Labor Indirect	Bare Erected	Eng'g CM H.O. & %	Eng'g CM H.O. & Total	Process Cont. %	Process Cont. Total	Project Cont. %	Project Cont. Total	TOTAL PLANT COST $	TOTAL PLANT COST $/kW
1	COAL HANDLING SYSTEM													
1.1	Coal Receive & Unload	$3,633	$0	$1,775	$0	$5,408	9.0%	$484	0%	$0	20.0%	$1,179	$7,072	$12
1.2	Coal Stackout & Reclaim	$4,695	$0	$1,138	$0	$5,833	8.8%	$511	0%	$0	20.0%	$1,269	$7,613	$13
1.3	Coal Conveyors & Yd Crus	$4,365	$0	$1,126	$0	$5,491	8.8%	$482	0%	$0	20.0%	$1,195	$7,168	$12
1.4	Other Coal Handling	$1,142	$0	$261	$0	$1,403	8.8%	$123	0%	$0	20.0%	$305	$1,830	$3
1.5	Sorbent Receive & Unload	$0	$0	$0	$0	$0	0.0%	$0	0%	$0	0.0%	$0	$0	$0
1.6	Sorbent Stackout & Reclaim	$0	$0	$0	$0	$0	0.0%	$0	0%	$0	0.0%	$0	$0	$0
1.7	Sorbent Conveyors	$0	$0	$0	$0	$0	0.0%	$0	0%	$0	0.0%	$0	$0	$0
1.8	Other Sorbent Handling	$0	$0	$0	$0	$0	0.0%	$0	0%	$0	0.0%	$0	$0	$0
1.9	Coal & Sorbent Hnd.Foundations	$0	$2,571	$6,428	$0	$8,999	9.6%	$863	0%	$0	20.0%	$1,972	$11,834	$19
	SUBTOTAL 1.	**$13,835**	**$2,571**	**$10,729**	**$0**	**$27,134**		**$2,463**		**$0**		**$5,919**	**$35,516**	**$58**
2	COAL PREP & FEED SYSTEMS													
2.1	Coal Crushing & Drying	w/2.3	$0	w2.3	$0	$0	0.0%	0	0%	0	0.0%	$0	$0	$0
2.2	Prepared Coal Storage & Feed	$1,549	$371	$243	$0	$2,162	8.6%	185	0%	0	20.0%	$469	$2,816	$5
2.3	Slurry Prep & Feed	$21,171	$0	$9,346	$0	$30,517	9.1%	2,773	5%	1,526	20.0%	$6,963	$41,778	$69
2.4	Misc. Coal Prep & Feed	$852	$620	$1,858	$0	$3,329	9.2%	306	0%	0	20.0%	$727	$4,362	$7
2.5	Sorbent Prep Equipment	$0	$0	$0	$0	$0	0.0%	0	0%	0	15.0%	$0	$0	$0
2.6	Sorbent Storage & Feed	$0	$0	$0	$0	$0	0.0%	0	0%	0	15.0%	$0	$0	$0
2.7	Sorbent Injection System	$0	$0	$0	$0	$0	0.0%	0	0%	0	0.0%	$0	$0	$0
2.8	Booster Air Supply System	$0	$0	$0	$0	$0	0.0%	0	0%	0	0.0%	$0	$0	$0
2.9	Coal & Sorbent Feed Foundation	$0	$3,310	$2,717	$0	$6,027	9.3%	558	0%	0	20.0%	$1,317	$7,903	$13
	SUBTOTAL 2.	**$23,571**	**$4,300**	**$14,165**	**$0**	**$42,035**		**$3,822**		**$1,526**		**$9,477**	**$56,860**	**$94**
3	FEEDWATER & MISC. BOP SYSTEMS													
3.1	Feedwater System	2,865	4,919	2,597	0	10,381	9.3%	962	0%	0	20.0%	$2,269	$13,611	$22
3.2	Water Makeup & Pretreating	616	64	344	0	1,024	9.5%	98	0%	0	30.0%	$337	$1,459	$2
3.3	Other Feedwater Subsystems	1,567	530	477	0	2,574	9.0%	231	0%	0	20.0%	$561	$3,366	$6
3.4	Service Water Systems	352	726	2,519	0	3,597	9.8%	351	0%	0	30.0%	$1,184	$5,132	$8
3.5	Other Boiler Plant Systems	1,891	733	1,816	0	4,441	9.5%	421	0%	0	20.0%	$972	$5,834	$10
3.6	FO Supply Sys & Nat Gas	$311	$588	$549	$0	1,448	9.6%	139	0%	0	20.0%	$318	$1,905	$3
3.7	Waste Treatment Equipment	861	0	525	0	1,386	9.7%	135	0%	0	30.0%	$456	$1,977	$3
3.8	Misc. Power Plant Equipment	$1,107	$148	$569	$0	1,824	9.7%	176	0%	0	30.0%	$600	$2,600	$4
	SUBTOTAL 3.	**$9,571**	**$7,709**	**$9,395**	**$0**	**$26,675**		**$2,513**		**$0**		**$6,697**	**$35,885**	**$59**
4	GASIFIER & ACCESSORIES													
4.1	Syngas Cooler Gasifier System	$109,860	$0	$60,195	$0	$170,055	9.2%	$15,578	13.9%	$23,600	15.3%	$32,083	$241,316	$397
4.2	Syngas Cooler (w/ Gasifier - $)	w/4.1	$0	w/ 4.1	$0	$0	0.0%	$0	0%	$0	0.0%	$0	$0	$0
4.3	ASU/Oxidant Compression	$186,270	$0	w/equip.	$0	$186,270	9.7%	$18,055	0%	$0	10.0%	$20,433	$224,758	$370
4.4	Scrubber & Low Temperature Cooling	5,837	$4,751	$4,944	$0	$15,532	9.6%	$1,491	0%	$0	20.0%	$3,405	$20,428	$34
4.5	Black Water & Sour Gas Section	w/4.1	$0	w/4.1	$0	$0	0.0%	$0	0%	$0	0.0%	$0	$0	$0
4.6	Soot Recovery & SARU	$1,780	$845	$1,671	$0	$4,296	9.6%	$414	0%	$0	20.0%	$942	$5,652	$9
4.7	Major Component Rigging	w/4.1	$0	w/4.1	$0	$0	0.0%	$0	0%	$0	0.0%	$0	$0	$0
4.8	Gasification Foundations	$0	$6,258	$5,224	$0	$11,481	9.3%	$1,064	0%	$0	25.0%	$3,136	$15,682	$26
	SUBTOTAL 4.	**$303,747**	**$11,853**	**$72,034**	**$0**	**$387,634**		**$36,603**		**$23,600**		**$59,998**	**$507,835**	**$836**

Exhibit 4-136 Case 2 D1B (25%) Capital Costs (continued)

Department:	NETL Office of Systems Analysis and Planning			**Cost Base:**	Jun 2007
Project:	CO2 Capture Sensitivity Systems Analysis			**Prepared:**	14-Jun-10
Case:	Case 2 D1B - GEE IGCC w/o WGS (25% CO2 Capture)				**x $1, 000**
Plant Size:	607.19 MW, net	Capital Charge Factor 0.1773	Capacity Factor 0.8		

Acct No.	Item/Description	Equipment Cost	Material Cost	Labor Direct	Labor Indirect	Bare Erected	Eng'g CM H.O. & %	Eng'g CM H.O. & Total	Process Cont. %	Process Cont. Total	Project Cont. %	Project Cont. Total	TOTAL PLANT COST $	TOTAL PLANT COST $/kW
5A	GAS CLEANUP & PIPING							*						
5A.1	Double Stage Selexol	$53,610	$0	$45,490	$0	$99,100	9.7%	$9,584	20%	$19,820	20.0%	$25,701	$154,205	$254
5A.2	Elemental Sulfur Plant	$9,987	$1,990	$12,884	$0	$24,861	9.7%	$2,415	0%	$0	20.0%	$5,455	$32,732	$54
5A.3	Mercury Removal	$1,063	$0	$809	$0	$1,872	9.7%	$181	5%	$94	20.0%	$429	$2,576	$4
5A.4	COS Hydrolysis	$3,549	$0	$4,635	$0	$8,184	9.7%	$796	0%	$0	20.0%	$1,796	$10,776	$18
5A.5	Particulate Removal	$0	$0	$0	$0	$0	0.0%	$0	0%	$0	10.0%	$0	$0	$0
5A.6	Blowback Gas Systems	$1,302	$0	$247	$0	$1,549	12.2%	$189	0%	$0	20.0%	$348	$2,085	$3
5A.7	Fuel Gas Piping	$0	$599	$419	$0	$1,018	9.3%	$94	0%	$0	20.0%	$222	$1,335	$2
5A.9	HGCU Foundations	$0	$617	$398	$0	$1,015	9.2%	$93	0%	$0	30.0%	$332	$1,440	$2
5.9	Open	$0	$0	$0	$0	$0	0.0%	$0	0%	$0	0.0%	$0	$0	$0
	SUBTOTAL 5A.	**$69,511**	**$3,206**	**$64,882**	**$0**	**$137,599**		**$13,352**		**$19,914**		**$34,284**	**$205,149**	**$338**
5B	CO2 REMOVAL & COMPRESSION													
5B.1	CO2 Removal System	$0	$0	$0	$0	$0	9.6%	$0	0%	$0	20.0%	$0	$0	$0
5B.2	CO2 Compression & Drying	$5,766	$0	$3,534	$0	$9,300	9.6%	$896	0%	$0	20.0%	$2,039	$12,235	$20
5B.3	CO2 Pipeline											0	0	0
5B.4	CO2 Storage											0	0	0
5B.5	CO2 Monitoring											0	0	0
	SUBTOTAL 5B.	**$5,766**	**$0**	**$3,534**	**$0**	**$9,300**		**$896**		**$0**		**$2,039**	**$12,235**	**$20**
6	COMBUSTION TURBINE/ACCESSORIES													
6.1	Combustion Turbine Generator	$92,026	$0	$6,583	$0	$98,609	9.5%	9,348	10%	9,861	10.0%	11,782	129,600	213
6.2	Syngas Expander	$5,550	$0	$767	$0	$6,316	9.5%	600	0%	0	15.0%	1,038	7,954	13
6.3	Compressed Air Piping	$0	$0	$0	$0	$0	0.0%	0	0%	0	0.0%	0	0	0
6.4	Combustion Turbine Foundations	$0	$887	$982	$0	$1,868	9.4%	175	0%	0	30.0%	613	2,656	4
	SUBTOTAL 6.	**$97,576**	**$887**	**$8,331**	**$0**	**$106,794**		**$10,123**		**$9,861**		**$13,432**	**$140,210**	**$231**
7	HRSG, DUCTING & STACK													
7.1	Heat Recovery Steam Generator	$34,760	$0	$4,942	$0	$39,702	9.5%	$3,775	0%	$0	10.0%	$4,348	$47,825	$79
7.2	Open	$0	$0	$0	$0	$0	0.0%	$0	0%	$0	0.0%	$0	$0	$0
7.3	Ductwork	$0	$1,711	$1,221	$0	$2,932	8.8%	$257	0%	$0	20.0%	$638	$3,827	$6
7.4	Stack	$3,338	$0	$1,254	$0	$4,592	9.6%	$440	0%	$0	10.0%	$503	$5,535	$9
7.9	HRSG, Duct & Stack Foundations	$0	$669	$642	$0	$1,311	9.3%	$122	0%	$0	30.0%	$430	$1,863	$3
	SUBTOTAL 7.	**$38,098**	**$2,380**	**$8,060**	**$0**	**$48,537**		**$4,594**		**$0**		**$5,919**	**$59,050**	**$97**
8	STEAM TURBINE GENERATOR													
8.1	Steam TG & Accessories	$29,446	$0	$5,034	$0	$34,480	9.6%	$3,308	0%	$0	10.0%	$3,779	$41,567	$68
8.2	Turbine Plant Auxiliaries	$204	$0	$468	$0	$672	9.8%	$66	0%	$0	10.0%	$74	$811	$1
8.3	Condenser & Auxiliaries	$5,250	$0	$1,541	$0	$6,792	9.6%	$649	0%	$0	10.0%	$744	$8,185	$13
8.4	Steam Piping	$5,058	$0	$3,558	$0	$8,616	8.6%	$740	0%	$0	25.0%	$2,339	$11,696	$19
8.9	TG Foundations	$0	$1,012	$1,711	$0	$2,723	9.5%	$258	0%	$0	30.0%	$894	$3,876	$6
	SUBTOTAL 8.	**$39,958**	**$1,012**	**$12,313**	**$0**	**$53,283**		**$5,022**		**$0**		**$7,830**	**$66,135**	**$109**
9	COOLING WATER SYSTEM													
9.1	Cooling Towers	$6,657	$0	$1,211	$0	$7,868	9.5%	$749	0%	$0	15.0%	$1,293	$9,910	$16
9.2	Circulating Water Pumps	$1,722	$0	$124	$0	$1,847	8.4%	$156	0%	$0	15.0%	$300	$2,303	$4
9.3	Circ. Water System Auxiliaries	$146	$0	$21	$0	$167	9.5%	$16	0%	$0	15.0%	$27	$210	$0
9.4	Circ. Water Piping	$0	$6,091	$1,579	$0	$7,670	9.0%	$693	0%	$0	20.0%	$1,673	$10,036	$17
9.5	Make-up Water System	$341	$0	$488	$0	$829	9.6%	$80	0%	$0	20.0%	$182	$1,090	$2
9.6	Component Cooling Water System	$719	$860	$612	$0	$2,191	9.4%	$205	0%	$0	20.0%	$479	$2,875	$5
9.9	Circ. Water System Foundations	$0	$2,236	$3,801	$0	$6,036	9.5%	$572	0%	$0	30.0%	$1,983	$8,591	$14
	SUBTOTAL 9.	**$9,586**	**$9,186**	**$7,836**	**$0**	**$26,608**		**$2,471**		**$0**		**$5,937**	**$35,015**	**$58**

Exhibit 4-136 Case 2 D1B (25%) Capital Costs (continued)

		Department:	NETL Office of Systems Analysis and Planning									**Cost Base:**	Jun 2007	
		Project:	CO2 Capture Sensitivity Systems Analysis									**Prepared:**	14-Jun-10	
		Case:	Case 2 D1B - GEE IGCC w/o WGS (25% CO2 Capture)										**x $1, 000**	
		Plant Size:	607.19	MW, net		Capital Charge Factor	0.1773		Capacity Factor	0.8				
			Equipment	**Material**	**Labor**		**Bare**	**Eng'g CM H.O. &**		**Process Cont.**		**Project Cont.**	**TOTAL PLANT COST**	
Acct No.		**Item/Description**	**Cost**	**Cost**	**Direct**	**Indirect**	**Erected**	**%**	**Total**	**%**	**Total**	**%**	**Total**	**$**	**$/kW**
10		ASH/SPENT SORBENT HANDLING SYS													
	10.1	Slag Dewatering & Cooling	$11,758	$6,483	$13,171	$0	$31,412	9.7%	$3,032	0%	$0	10.0%	$3,444	$37,888	$62
	10.2	Gasifier Ash Depressurization	w/10.1	w/10.1	w/10.1	$0	$0	0.0%	$0	0%	$0	0.0%	$0	$0	$0
	10.3	Cleanup Ash Depressurization	w/10.1	w/10.1	w/10.1	$0	$0	0.0%	$0	0%	$0	0.0%	$0	$0	$0
	10.4	High Temperature Ash Piping	$0	$0	$0	$0	$0	0.0%	$0	0%	$0	0.0%	$0	$0	$0
	10.5	Other Ash Recovery Equipment	$0	$0	$0	$0	$0	0.0%	$0	0%	$0	0.0%	$0	$0	$0
	10.6	Ash Storage Silos	$572	$0	$622	$0	$1,194	9.7%	$116	0%	$0	15.0%	$197	$1,507	$2
	10.7	Ash Transport & Feed Equipment	$767	$0	$185	$0	$952	9.3%	$89	0%	$0	15.0%	$156	$1,197	$2
	10.8	Misc. Ash Handling Equipment	$1,185	$1,452	$434	$0	$3,071	9.5%	$292	0%	$0	15.0%	$504	$3,867	$6
	10.9	Ash/Spent Sorbent Foundation	$0	$51	$64	$0	$114	9.4%	$11	0%	$0	30.0%	$37	$162	$0
		SUBTOTAL 10.	**$14,282**	**$7,986**	**$14,476**	**$0**	**$36,744**		**$3,539**		**$0**		**$4,339**	**$44,622**	**$73**
11		ACCESSORY ELECTRIC PLANT													
	11.1	Generator Equipment	$961	$0	$951	$0	$1,912	9.5%	$183	0%	$0	10.0%	$209	$2,303	$4
	11.2	Station Service Equipment	$4,150	$0	$374	$0	$4,524	9.2%	$417	0%	$0	10.0%	$494	$5,435	$9
	11.3	Switchgear & Motor Control	$7,672	$0	$1,395	$0	$9,067	9.3%	$841	0%	$0	15.0%	$1,486	$11,394	$19
	11.4	Conduit & Cable Tray	$0	$3,564	$11,756	$0	$15,320	9.7%	$1,482	0%	$0	25.0%	$4,200	$21,002	$35
	11.5	Wire & Cable	$0	$6,809	$4,474	$0	$11,283	7.3%	$820	0%	$0	25.0%	$3,026	$15,128	$25
	11.6	Protective Equipment	$0	$686	$2,496	$0	$3,182	9.8%	$311	0%	$0	15.0%	$524	$4,016	$7
	11.7	Standby Equipment	$236	$0	$231	$0	$467	9.5%	$45	0%	$0	15.0%	$77	$588	$1
	11.8	Main Power Transformers	$17,787	$0	$146	$0	$17,934	7.6%	$1,356	0%	$0	15.0%	$2,894	$22,184	$37
	11.9	Electrical Foundations	$0	$159	$417	$0	$577	9.6%	$55	0%	$0	30.0%	$190	$821	$1
		SUBTOTAL 11.	**$30,806**	**$11,218**	**$22,240**	**$0**	**$64,264**		**$5,509**		**$0**		**$13,099**	**$82,872**	**$136**
12		INSTRUMENTATION & CONTROL													
	12.1	IGCC Control Equipment	w/4.1	$0	w/4.1	$0	$0	0.0%	$0	0%	$0	0.0%	$0	$0	$0
	12.2	Combustion Turbine Control	w/6.1	$0	w/6.1	$0	$0	0.0%	$0	0%	$0	0.0%	$0	$0	$0
	12.3	Steam Turbine Control	w/8.1	$0	w/8.1	$0	$0	0.0%	$0	0%	$0	0.0%	$0	$0	$0
	12.4	Other Major Component Control	$1,045	$0	$698	$0	$1,743	9.5%	$165	5%	$87	15.0%	$299	$2,294	$4
	12.5	Signal Processing Equipment	w/12.7	$0	w/12.7	$0	$0	0.0%	$0	0%	$0	0.0%	$0	$0	$0
	12.6	Control Boards,Panels & Racks	$240	$0	$154	$0	$394	9.5%	$37	5%	$20	20.0%	$90	$541	$1
	12.7	Computer & Accessories	$5,574	$0	$178	$0	$5,752	9.2%	$528	5%	$288	10.0%	$657	$7,224	$12
	12.8	Instrument Wiring & Tubing	$0	$1,947	$3,980	$0	$5,928	8.5%	$503	5%	$296	25.0%	$1,682	$8,408	$14
	12.9	Other I & C Equipment	$3,726	$0	$1,809	$0	$5,535	9.4%	$521	5%	$277	15.0%	$950	$7,282	$12
		SUBTOTAL 12.	**$10,584**	**$1,947**	**$6,820**	**$0**	**$19,351**		**$1,754**		**$968**		**$3,678**	**$25,750**	**$42**
13		IMPROVEMENTS TO SITE													
	13.1	Site Preparation	0	108	2,297	0	2,405	9.9%	239	0%	0	30.0%	793	3,436	6
	13.2	Site Improvements	0	1,912	2,540	0	4,452	9.9%	439	0%	0	30.0%	1,467	6,358	10
	13.3	Site Facilities	3,426	0	3,615	0	7,040	9.9%	694	0%	0	30.0%	2,320	10,054	17
		SUBTOTAL 13.	**$3,426**	**$2,019**	**$8,452**	**$0**	**$13,897**		**$1,372**		**$0**		**$4,581**	**$19,849**	**$33**

Exhibit 4-136 Case 2 D1B (25%) Capital Costs (continued)

Department:	NETL Office of Systems Analysis and Planning			**Cost Base:**	Jun 2007
Project:	CO2 Capture Sensitivity Systems Analysis			**Prepared:**	27-May-11
Case:	Case 2 D1B - GEE IGCC w/o WGS (25% CO2 Capture)				**x $1, 000**
Plant Size:	607.19 MW, net	Capital Charge Factor	0.1773	Capacity Factor	0.8

Acct No.	Item/Description	Equipment Cost	Material Cost	Labor Direct	Labor Indirect	Bare Erected	Eng'g CM H.O. & %	Eng'g CM H.O. & Total	Process Cont. %	Process Cont. Total	Project Cont. %	Project Cont. Total	TOTAL PLANT COST $	TOTAL PLANT COST $/kW
14	BUILDINGS & STRUCTURES													
14.1	Combustion Turbine Area	$0	$263	$149	$0	$412	8.8%	$36	0%	$0	20.0%	$90	$539	$1
14.2	Steam Turbine Building	$0	$2,361	$3,363	$0	$5,724	9.2%	$527	0%	$0	15.0%	$938	$7,188	$12
14.3	Administration Building	$0	$875	$634	$0	$1,509	8.9%	$134	0%	$0	15.0%	$246	$1,890	$3
14.4	Circulation Water Pumphouse	$0	$156	$82	$0	$238	8.8%	$21	0%	$0	15.0%	$39	$298	$0
14.5	Water Treatment Buildings	$0	$520	$508	$0	$1,028	9.0%	$93	0%	$0	15.0%	$168	$1,289	$2
14.6	Machine Shop	$0	$448	$306	$0	$754	8.9%	$67	0%	$0	15.0%	$123	$944	$2
14.7	Warehouse	$0	$723	$467	$0	$1,189	8.9%	$105	0%	$0	15.0%	$194	$1,489	$2
14.8	Other Buildings & Structures	$0	$433	$337	$0	$770	8.9%	$69	0%	$0	20.0%	$168	$1,006	$2
14.9	Waste Treating Building & Str.	$0	$961	$1,837	$0	$2,799	9.3%	$261	0%	$0	20.0%	$612	$3,672	$6
	SUBTOTAL 14.	**$0**	**$6,739**	**$7,684**	**$0**	**$14,423**		**$1,313**		**$0**		**$2,578**	**$18,314**	**$30**
	Total Cost	**$670,315**	**$73,013**	**$270,950**	**$0**	**$1,014,278**		**$95,346**		**$55,868**		**$179,806**	**$1,345,298**	**$2,216**

Owner's Costs			
Preproduction Costs			
6 Months All Labor		$12,712	$21
1 Month Maintenance Materials		$2,754	$5
1 Month Non-fuel Consumables		$273	$0
1 Month Waste Disposal		$302	$0
25% of 1 Months Fuel Cost at 100% CF		$1,612	$3
2% of TPC		$26,906	$44
Total		$44,559	$73
Inventory Capital			
60 day supply of fuel and consumables at 100% CF		$13,445	$22
0.5% of TPC (spare parts)		$6,726	$11
Total		$20,171	$33
Initial Cost for Catalyst and Chemicals		$4,931	$8
Land		$900	$1
Other Owner's Costs		$201,795	$332
Financing Costs		$36,323	$60
Total Overnight Costs (TOC)		**$1,653,977**	**$2,724.0**
TASC Multiplier	(IOU, high risk, 35 year)	1.140	
Total As-Spent Cost (TASC)		**$1,885,534**	**$3,105**

Exhibit 4-137 Case 2 D1B Initial and Annual O&M Expenses

INITIAL & ANNUAL O&M EXPENSES			
Case:	Case 2 D1B - GEE IGCC w/o WGS (25% CO2 Capture)		
Plant Size (MWe):	607.19	**Heat Rate (Btu/kWh):**	8,891
Primary/Secondary Fuel:	Illinois #6 Bituminous Coal	**Fuel Cost ($/MM Btu):**	1.64
Design/Construction	5 years	**Book Life (yrs):**	30
TPC (Plant Cost) Year:	Jun 2007	**TPI Year:**	2015
Capacity Factor (%):	80	**CO_2 Captured (TPD):**	3,094

OPERATING & MAINTENANCE LABOR

Operating Labor

Operating Labor Rate (base):	$34.65	$/hour
Operating Labor Burden:	30.00	% of base
Labor Overhead Charge:	25.00	% of labor

Operating Labor Requirements per Shift:	units/mod.	Total Plant
Skilled Operator	2.0	2.0
Operator	10.0	10.0
Foreman	1.0	1.0
Lab Tech's etc.	3.0	3.0
TOTAL Operating Jobs	16.0	16.0

	Annual Costs $	Annual Costs $/kW-net
Annual Operating Labor Cost (calc'd)	$6,313,507	$10.398
Maintenance Labor Cost (calc'd)	$14,025,931	$23.100
Administrative & Support Labor (calc'd)	$5,084,860	$8.374
Property Taxes & Insurance	$26,905,955	$44.312
TOTAL FIXED OPERATING COSTS	**$52,330,253**	**$86.184**

VARIABLE OPERATING COSTS

	$	$/kWh-net
Maintenance Material Costs (calc'd)	**$26,440,810**	**0.00621**

Consumables	Consumption Initial	Consumption /Day	Unit Cost	Initial Cost	$	$/kWh-net
Water (/1000 gallons)	0	3,378	1.08	$0	$1,067,015	0.00025
Chemicals						
MU & WT Chem. (lbs)	0	20,127	0.17	$0	$1,017,114	0.00024
Carbon (Mercury Removal) (lb)	55,194	95	1.05	$57,963	$29,132	0.00001
COS Catalyst (m3)	418	0.29	2,397.36	$1,001,137	$200,227	0.00005
Water Gas Shift Catalyst (ft3)	0	0.00	498.83	$0	$0	0.00000
Selexol Solution (gal)	289,013	59	13.40	$3,872,261	$230,395	0.00005
SCR Catalyst (m3)	0	0	0.00	$0	$0	0.00000
Ammonia (19% NH3) (ton)	0	0	0.00	$0	$0	0.00000
Claus Catalyst (ft3)	0	1.92	131.27	$0	$73,424	0.00002
Subtotal Chemicals				**$4,931,362**	**$1,550,292**	**0.00036**
Other						
Supplemental Fuel (MMBtu)	0	0	0.00	$0	$0	0.00000
Gases, N2 etc. (/100scf)	0	0	0.00	$0	$0	0.00000
L.P. Steam (/1000 pounds)	0	0	0.00	$0	$0	0.00000
Subtotal Other				**$0**	**$0**	**0.00000**
Waste Disposal						
Spent Mercury Sorbent (lb)	0	95	0.42	$0	$11,651	0.00000
Flyash (ton)	0	0	0.00	$0	$0	0.00000
Slag (ton)	0	609	16.23	$0	$2,886,534	0.00068
Subtotal Solid Waste Disposal				**$0**	**$2,898,185**	**$0**
By-products & Emissions						
Sulfur (tons)	0	139	0.00	$0	$0	0.00000
Subtotal By-Products				**$0**	**$0**	**$0**
TOTAL VARIABLE OPERATING COSTS					**$31,956,302**	**0.00751**
Coal FUEL (tons)	**0**	**5,553**	**38.19**	**$0**	**$61,916,574**	**0.01455**

Exhibit 4-138 Case 2 D2A (25%) Capital Costs

Department:	NETL Office of Systems Analysis and Planning	**Cost Base:**	Jun 2007
Project:	CO2 Capture Sensitivity Systems Analysis	**Prepared:**	14-Jun-10
Case:	Case 2 D2A - GEE IGCC w/ one WGS bypass (25% CO2 Capture)		**x $1, 000**
Plant Size:	607.03 MW, net Capital Charge Factor 0.1773	Capacity Factor	0.8

Acct No.	Item/Description	Equipment Cost	Material Cost	Labor Direct	Labor Indirect	Bare Erected	Eng'g CM H.O. & %	Eng'g CM H.O. & Total	Process Cont. %	Process Cont. Total	Project Cont. %	Project Cont. Total	TOTAL PLANT COST $	TOTAL PLANT COST $/kW
1	COAL HANDLING SYSTEM													
1.1	Coal Receive & Unload	$3,634	$0	$1,776	$0	$5,409	9.0%	$485	0%	$0	20.0%	$1,179	$7,073	$12
1.2	Coal Stackout & Reclaim	$4,695	$0	$1,138	$0	$5,834	8.8%	$511	0%	$0	20.0%	$1,269	$7,614	$13
1.3	Coal Conveyors & Yd Crus	$4,365	$0	$1,126	$0	$5,492	8.8%	$482	0%	$0	20.0%	$1,195	$7,169	$12
1.4	Other Coal Handling	$1,142	$0	$261	$0	$1,403	8.8%	$123	0%	$0	20.0%	$305	$1,831	$3
1.5	Sorbent Receive & Unload	$0	$0	$0	$0	$0	0.0%	$0	0%	$0	0.0%	$0	$0	$0
1.6	Sorbent Stackout & Reclaim	$0	$0	$0	$0	$0	0.0%	$0	0%	$0	0.0%	$0	$0	$0
1.7	Sorbent Conveyors	$0	$0	$0	$0	$0	0.0%	$0	0%	$0	0.0%	$0	$0	$0
1.8	Other Sorbent Handling	$0	$0	$0	$0	$0	0.0%	$0	0%	$0	0.0%	$0	$0	$0
1.9	Coal & Sorbent Hnd.Foundations	$0	$2,571	$6,429	$0	$9,001	9.6%	$863	0%	$0	20.0%	$1,973	$11,836	$19
	SUBTOTAL 1.	**$13,837**	**$2,571**	**$10,730**	**$0**	**$27,138**		**$2,463**		**$0**		**$5,920**	**$35,522**	**$59**
2	COAL PREP & FEED SYSTEMS													
2.1	Coal Crushing & Drying	w/2.3	$0	w2.3	$0	$0	0.0%	0	0%	0	0.0%	$0	$0	$0
2.2	Prepared Coal Storage & Feed	$1,549	$371	$243	$0	$2,162	8.6%	185	0%	0	20.0%	$469	$2,817	$5
2.3	Slurry Prep & Feed	$21,174	$0	$9,348	$0	$30,522	9.1%	2,773	5%	1,526	20.0%	$6,964	$41,785	$69
2.4	Misc. Coal Prep & Feed	$852	$620	$1,858	$0	$3,330	9.2%	306	0%	0	20.0%	$727	$4,363	$7
2.5	Sorbent Prep Equipment	$0	$0	$0	$0	$0	0.0%	0	0%	0	15.0%	$0	$0	$0
2.6	Sorbent Storage & Feed	$0	$0	$0	$0	$0	0.0%	0	0%	0	15.0%	$0	$0	$0
2.7	Sorbent Injection System	$0	$0	$0	$0	$0	0.0%	0	0%	0	0.0%	$0	$0	$0
2.8	Booster Air Supply System	$0	$0	$0	$0	$0	0.0%	0	0%	0	0.0%	$0	$0	$0
2.9	Coal & Sorbent Feed Foundation	$0	$3,310	$2,718	$0	$6,028	9.3%	558	0%	0	20.0%	$1,317	$7,904	$13
	SUBTOTAL 2.	**$23,574**	**$4,301**	**$14,167**	**$0**	**$42,042**		**$3,822**		**$1,526**		**$9,478**	**$56,868**	**$94**
3	FEEDWATER & MISC. BOP SYSTEMS													
3.1	Feedwater System	2,865	4,920	2,597	0	10,381	9.3%	962	0%	0	20.0%	$2,269	$13,612	$22
3.2	Water Makeup & Pretreating	616	64	345	0	1,025	9.5%	98	0%	0	30.0%	$337	$1,460	$2
3.3	Other Feedwater Subsystems	1,567	530	477	0	2,574	9.0%	231	0%	0	20.0%	$561	$3,366	$6
3.4	Service Water Systems	353	726	2,521	0	3,600	9.8%	351	0%	0	30.0%	$1,185	$5,136	$8
3.5	Other Boiler Plant Systems	1,893	733	1,818	0	4,444	9.5%	422	0%	0	20.0%	$973	$5,839	$10
3.6	FO Supply Sys & Nat Gas	$311	$588	$549	$0	1,448	9.6%	140	0%	0	20.0%	$318	$1,905	$3
3.7	Waste Treatment Equipment	862	0	526	0	1,387	9.7%	135	0%	0	30.0%	$457	$1,979	$3
3.8	Misc. Power Plant Equipment	$1,107	$148	$569	$0	1,824	9.7%	176	0%	0	30.0%	$600	$2,600	$4
	SUBTOTAL 3.	**$9,574**	**$7,710**	**$9,399**	**$0**	**$26,684**		**$2,514**		**$0**		**$6,699**	**$35,897**	**$59**
4	GASIFIER & ACCESSORIES													
4.1	Syngas Cooler Gasifier System	$109,878	$0	$60,205	$0	$170,083	9.2%	$15,581	13.9%	$23,604	15.3%	$32,088	$241,356	$398
4.2	Syngas Cooler (w/ Gasifier - $)	w/4.1	$0	w/ 4.1	$0	$0	0.0%	$0	0%	$0	0.0%	$0	$0	$0
4.3	ASU/Oxidant Compression	$186,300	$0	w/equip.	$0	$186,300	9.7%	$18,058	0%	$0	10.0%	$20,436	$224,794	$370
4.4	Scrubber & Low Temperature Cooling	5,838	$4,751	$4,945	$0	$15,534	9.6%	$1,492	0%	$0	20.0%	$3,405	$20,431	$34
4.5	Black Water & Sour Gas Section	w/4.1	$0	w/4.1	$0	$0	0.0%	$0	0%	$0	0.0%	$0	$0	$0
4.6	Soot Recovery & SARU	$1,780	$845	$1,671	$0	$4,296	9.6%	$414	0%	$0	20.0%	$942	$5,652	$9
4.7	Major Component Rigging	w/4.1	$0	w/4.1	$0	$0	0.0%	$0	0%	$0	0.0%	$0	$0	$0
4.8	Gasification Foundations	$0	$6,259	$5,225	$0	$11,483	9.3%	$1,064	0%	$0	25.0%	$3,137	$15,684	$26
	SUBTOTAL 4.	**$303,796**	**$11,855**	**$72,046**	**$0**	**$387,697**		**$36,609**		**$23,604**		**$60,008**	**$507,918**	**$837**

Exhibit 4-138 Case 2 D2A (25%) Capital Costs (continued)

		Department:	NETL Office of Systems Analysis and Planning										**Cost Base:**	Jun 2007
		Project:	CO2 Capture Sensitivity Systems Analysis										**Prepared:**	14-Jun-10
		Case:	Case 2 D2A - GEE IGCC w/ one WGS bypass (25% CO2 Capture)											**x $1, 000**
		Plant Size:	607.03	MW, net			Capital Charge Factor	0.1773	Capacity Factor	0.8				
			Equipment	**Material**	**Labor**		**Bare**	**Eng'g CM H.O. &**		**Process Cont.**		**Project Cont.**		**TOTAL PLANT COST**	
Acct No.	**Item/Description**		**Cost**	**Cost**	**Direct**	**Indirect**	**Erected**	**%**	**Total**	**%**	**Total**	**%**	**Total**	**$**	**$/kW**
5A	GAS CLEANUP & PIPING								*						
5A.1	Double Stage Selexol		$53,677	$0	$45,546	$0	$99,223	9.7%	$9,596	20%	$19,845	20.0%	$25,733	$154,396	$254
5A.2	Elemental Sulfur Plant		$9,988	$1,991	$12,886	$0	$24,864	9.7%	$2,415	0%	$0	20.0%	$5,456	$32,735	$54
5A.3	Mercury Removal		$1,064	$0	$810	$0	$1,874	9.7%	$181	5%	$94	20.0%	$430	$2,579	$4
5A.4	Shift Reactors		$156	$0	$63	$0	$219	9.6%	$21	0%	$0	20.0%	$48	$288	$0
5A.5	COS Hydrolysis		$3,554	$0	$4,642	$0	$8,196	9.7%	$797	0%	$0	20.0%	$1,799	$10,791	$18
5A.6	Particulate Removal		$0	$0	$0	$0	$0	0.0%	$0	0%	$0	10.0%	$0	$0	$0
5A.7	Blowback Gas Systems		$1,302	$0	$247	$0	$1,549	12.2%	$189	0%	$0	20.0%	$348	$2,085	$3
5A.8	Fuel Gas Piping		$0	$599	$419	$0	$1,018	9.3%	$94	0%	$0	20.0%	$223	$1,335	$2
5A.9	HGCU Foundations		$0	$617	$398	$0	$1,015	9.2%	$93	0%	$0	30.0%	$332	$1,440	$2
5A.10	Open		$0	$0	$0	$0	$0	0.0%	$0	0%	$0	0.0%	$0	$0	$0
	SUBTOTAL 5A.		**$69,741**	**$3,206**	**$65,010**	**$0**	**$137,958**		**$13,387**		**$19,938**		**$34,367**	**$205,650**	**$339**
5B	CO2 REMOVAL & COMPRESSION														
5B.1	CO2 Removal System		$0	$0	$0	$0	$0	9.6%	$0	0%	$0	20.0%	$0	$0	$0
5B.2	CO2 Compression & Drying		$5,818	$0	$3,566	$0	$9,384	9.6%	$904	0%	$0	20.0%	$2,058	$12,346	$20
5B.3	CO2 Pipeline												0	0	0
5B.4	CO2 Storage												0	0	0
5B.5	CO2 Monitoring												0	0	0
	SUBTOTAL 5B.		**$5,818**	**$0**	**$3,566**	**$0**	**$9,384**		**$904**		**$0**		**$2,058**	**$12,346**	**$20**
6	COMBUSTION TURBINE/ACCESSORIES														
6.1	Combustion Turbine Generator		$92,026	$0	$6,583	$0	$98,609	9.5%	9,348	10%	9,861	10.0%	11,782	129,600	213
6.2	Syngas Expander		$5,550	$0	$767	$0	$6,316	9.5%	600	0%	0	15.0%	1,038	7,954	13
6.3	Compressed Air Piping		$0	$0	$0	$0	$0	0.0%	0	0%	0	0.0%	0	0	0
6.4	Combustion Turbine Foundations		$0	$887	$982	$0	$1,868	9.4%	175	0%	0	30.0%	613	2,656	4
	SUBTOTAL 6.		**$97,576**	**$887**	**$8,331**	**$0**	**$106,794**		**$10,123**		**$9,861**		**$13,432**	**$140,210**	**$231**
7	HRSG, DUCTING & STACK														
7.1	Heat Recovery Steam Generator		$34,760	$0	$4,942	$0	$39,702	9.5%	$3,775	0%	$0	10.0%	$4,348	$47,825	$79
7.2	Open		$0	$0	$0	$0	$0	0.0%	$0	0%	$0	0.0%	$0	$0	$0
7.3	Ductwork		$0	$1,711	$1,221	$0	$2,932	8.8%	$257	0%	$0	20.0%	$638	$3,827	$6
7.4	Stack		$3,338	$0	$1,254	$0	$4,592	9.6%	$440	0%	$0	10.0%	$503	$5,535	$9
7.9	HRSG, Duct & Stack Foundations		$0	$669	$642	$0	$1,311	9.3%	$122	0%	$0	30.0%	$430	$1,863	$3
	SUBTOTAL 7.		**$38,098**	**$2,380**	**$8,060**	**$0**	**$48,538**		**$4,594**		**$0**		**$5,919**	**$59,050**	**$97**
8	STEAM TURBINE GENERATOR														
8.1	Steam TG & Accessories		$29,446	$0	$5,034	$0	$34,480	9.6%	$3,308	0%	$0	10.0%	$3,779	$41,567	$68
8.2	Turbine Plant Auxiliaries		$204	$0	$468	$0	$672	9.8%	$66	0%	$0	10.0%	$74	$811	$1
8.3	Condenser & Auxiliaries		$5,250	$0	$1,541	$0	$6,792	9.6%	$649	0%	$0	10.0%	$744	$8,185	$13
8.4	Steam Piping		$5,058	$0	$3,558	$0	$8,617	8.6%	$740	0%	$0	25.0%	$2,339	$11,696	$19
8.9	TG Foundations		$0	$1,012	$1,711	$0	$2,723	9.5%	$258	0%	$0	30.0%	$894	$3,876	$6
	SUBTOTAL 8.		**$39,958**	**$1,012**	**$12,313**	**$0**	**$53,283**		**$5,022**		**$0**		**$7,830**	**$66,135**	**$109**
9	COOLING WATER SYSTEM														
9.1	Cooling Towers		$6,657	$0	$1,211	$0	$7,868	9.5%	$749	0%	$0	15.0%	$1,293	$9,910	$16
9.2	Circulating Water Pumps		$1,722	$0	$124	$0	$1,847	8.4%	$156	0%	$0	15.0%	$300	$2,303	$4
9.3	Circ. Water System Auxiliaries		$146	$0	$21	$0	$167	9.5%	$16	0%	$0	15.0%	$27	$210	$0
9.4	Circ. Water Piping		$0	$6,091	$1,579	$0	$7,670	9.0%	$693	0%	$0	20.0%	$1,673	$10,036	$17
9.5	Make-up Water System		$341	$0	$488	$0	$829	9.6%	$80	0%	$0	20.0%	$182	$1,091	$2
9.6	Component Cooling Water System		$719	$860	$612	$0	$2,191	9.4%	$205	0%	$0	20.0%	$479	$2,875	$5
9.9	Circ. Water System Foundations		$0	$2,236	$3,801	$0	$6,036	9.5%	$572	0%	$0	30.0%	$1,983	$8,591	$14
	SUBTOTAL 9.		**$9,586**	**$9,186**	**$7,836**	**$0**	**$26,608**		**$2,471**		**$0**		**$5,937**	**$35,016**	**$58**

Exhibit 4-138 Case 2 D2A (25%) Capital Costs (continued)

		Department:	NETL Office of Systems Analysis and Planning									**Cost Base:**	Jun 2007	
		Project:	CO2 Capture Sensitivity Systems Analysis									**Prepared:**	14-Jun-10	
		Case:	Case 2 D2A - GEE IGCC w/ one WGS bypass (25% CO2 Capture)										**x $1, 000**	
		Plant Size:	607.03	MW, net		Capital Charge Factor	0.1773		Capacity Factor	0.8				
			Equipment	**Material**	**Labor**		**Bare**	**Eng'g CM H.O. &**		**Process Cont.**		**Project Cont.**		**TOTAL PLANT COST**	
Acct No.	**Item/Description**		**Cost**	**Cost**	**Direct**	**Indirect**	**Erected**	**%**	**Total**	**%**	**Total**	**%**	**Total**	**$**	**$/kW**
10	ASH/SPENT SORBENT HANDLING SYS														
10.1	Slag Dewatering & Cooling		$11,759	$6,484	$13,173	$0	$31,417	9.7%	$3,032	0%	$0	10.0%	$3,445	$37,894	$62
10.2	Gasifier Ash Depressurization		w/10.1	w/10.1	w/10.1	$0	$0	0.0%	$0	0%	$0	0.0%	$0	$0	$0
10.3	Cleanup Ash Depressurization		w/10.1	w/10.1	w/10.1	$0	$0	0.0%	$0	0%	$0	0.0%	$0	$0	$0
10.4	High Temperature Ash Piping		$0	$0	$0	$0	$0	0.0%	$0	0%	$0	0.0%	$0	$0	$0
10.5	Other Ash Recovery Equipment		$0	$0	$0	$0	$0	0.0%	$0	0%	$0	0.0%	$0	$0	$0
10.6	Ash Storage Silos		$572	$0	$623	$0	$1,195	9.7%	$116	0%	$0	15.0%	$197	$1,507	$2
10.7	Ash Transport & Feed Equipment		$767	$0	$185	$0	$952	9.3%	$89	0%	$0	15.0%	$156	$1,198	$2
10.8	Misc. Ash Handling Equipment		$1,185	$1,452	$434	$0	$3,071	9.5%	$292	0%	$0	15.0%	$505	$3,868	$6
10.9	Ash/Spent Sorbent Foundation		$0	$51	$64	$0	$114	9.4%	$11	0%	$0	30.0%	$37	$162	$0
	SUBTOTAL 10.		**$14,284**	**$7,987**	**$14,478**	**$0**	**$36,749**		**$3,540**		**$0**		**$4,340**	**$44,629**	**$74**
11	ACCESSORY ELECTRIC PLANT														
11.1	Generator Equipment		$961	$0	$951	$0	$1,912	9.5%	$183	0%	$0	10.0%	$209	$2,303	$4
11.2	Station Service Equipment		$4,152	$0	$374	$0	$4,526	9.2%	$417	0%	$0	10.0%	$494	$5,437	$9
11.3	Switchgear & Motor Control		$7,675	$0	$1,396	$0	$9,071	9.3%	$841	0%	$0	15.0%	$1,487	$11,400	$19
11.4	Conduit & Cable Tray		$0	$3,565	$11,762	$0	$15,328	9.7%	$1,483	0%	$0	25.0%	$4,203	$21,013	$35
11.5	Wire & Cable		$0	$6,812	$4,476	$0	$11,289	7.3%	$820	0%	$0	25.0%	$3,027	$15,136	$25
11.6	Protective Equipment		$0	$686	$2,496	$0	$3,182	9.8%	$311	0%	$0	15.0%	$524	$4,016	$7
11.7	Standby Equipment		$236	$0	$231	$0	$467	9.5%	$45	0%	$0	15.0%	$77	$588	$1
11.8	Main Power Transformers		$17,787	$0	$146	$0	$17,934	7.6%	$1,356	0%	$0	15.0%	$2,894	$22,184	$37
11.9	Electrical Foundations		$0	$159	$417	$0	$577	9.6%	$55	0%	$0	30.0%	$190	$821	$1
	SUBTOTAL 11.		**$30,812**	**$11,223**	**$22,249**	**$0**	**$64,284**		**$5,510**		**$0**		**$13,104**	**$82,899**	**$137**
12	INSTRUMENTATION & CONTROL														
12.1	IGCC Control Equipment		w/4.1	$0	w/4.1	$0	$0	0.0%	$0	0%	$0	0.0%	$0	$0	$0
12.2	Combustion Turbine Control		w/6.1	$0	w/6.1	$0	$0	0.0%	$0	0%	$0	0.0%	$0	$0	$0
12.3	Steam Turbine Control		w/8.1	$0	w/8.1	$0	$0	0.0%	$0	0%	$0	0.0%	$0	$0	$0
12.4	Other Major Component Control		$1,045	$0	$698	$0	$1,743	9.5%	$165	5%	$87	15.0%	$299	$2,294	$4
12.5	Signal Processing Equipment		w/12.7	$0	w/12.7	$0	$0	0.0%	$0	0%	$0	0.0%	$0	$0	$0
12.6	Control Boards,Panels & Racks		$240	$0	$154	$0	$394	9.5%	$37	5%	$20	20.0%	$90	$541	$1
12.7	Computer & Accessories		$5,575	$0	$178	$0	$5,754	9.2%	$528	5%	$288	10.0%	$657	$7,227	$12
12.8	Instrument Wiring & Tubing		$0	$1,948	$3,982	$0	$5,929	8.5%	$503	5%	$296	25.0%	$1,682	$8,411	$14
12.9	Other I & C Equipment		$3,727	$0	$1,810	$0	$5,537	9.4%	$521	5%	$277	15.0%	$950	$7,285	$12
	SUBTOTAL 12.		**$10,588**	**$1,948**	**$6,822**	**$0**	**$19,357**		**$1,754**		**$968**		**$3,679**	**$25,758**	**$42**
13	IMPROVEMENTS TO SITE														
13.1	Site Preparation		0	108	2,297	0	2,405	9.9%	239	0%	0	30.0%	793	3,437	6
13.2	Site Improvements		0	1,912	2,541	0	4,452	9.9%	439	0%	0	30.0%	1,467	6,359	10
13.3	Site Facilities		3,426	0	3,615	0	7,041	9.9%	694	0%	0	30.0%	2,320	10,055	17
	SUBTOTAL 13.		**$3,426**	**$2,019**	**$8,453**	**$0**	**$13,898**		**$1,372**		**$0**		**$4,581**	**$19,851**	**$33**

Exhibit 4-138 Case 2 D2A (25%) Capital Costs (continued)

Department:	NETL Office of Systems Analysis and Planning			**Cost Base:**	Jun 2007
Project:	CO2 Capture Sensitivity Systems Analysis			**Prepared:**	27-May-11
Case:	Case 2 D2A - GEE IGCC w/ one WGS bypass (25% CO2 Capture)				**x $1, 000**
Plant Size:	607.03 MW, net	Capital Charge Factor 0.1773	Capacity Factor 0.8		

Acct No.	Item/Description	Equipment Cost	Material Cost	Labor Direct	Labor Indirect	Bare Erected	Eng'g CM H.O. & %	Eng'g CM H.O. & Total	Process Cont. %	Process Cont. Total	Project Cont. %	Project Cont. Total	TOTAL PLANT COST $	TOTAL PLANT COST $/kW
14	BUILDINGS & STRUCTURES													
14.1	Combustion Turbine Area	$0	$263	$149	$0	$412	8.8%	$36	0%	$0	20.0%	$90	$539	$1
14.2	Steam Turbine Building	$0	$2,361	$3,363	$0	$5,724	9.2%	$527	0%	$0	15.0%	$938	$7,188	$12
14.3	Administration Building	$0	$875	$634	$0	$1,509	8.9%	$134	0%	$0	15.0%	$247	$1,890	$3
14.4	Circulation Water Pumphouse	$0	$156	$82	$0	$238	8.8%	$21	0%	$0	15.0%	$39	$298	$0
14.5	Water Treatment Buildings	$0	$521	$508	$0	$1,029	9.0%	$93	0%	$0	15.0%	$168	$1,290	$2
14.6	Machine Shop	$0	$448	$306	$0	$754	8.9%	$67	0%	$0	15.0%	$123	$944	$2
14.7	Warehouse	$0	$723	$467	$0	$1,189	8.9%	$105	0%	$0	15.0%	$194	$1,489	$2
14.8	Other Buildings & Structures	$0	$433	$337	$0	$770	8.9%	$69	0%	$0	20.0%	$168	$1,006	$2
14.9	Waste Treating Building & Str.	$0	$962	$1,838	$0	$2,799	9.3%	$261	0%	$0	20.0%	$612	$3,672	$6
	SUBTOTAL 14.	**$0**	**$6,740**	**$7,685**	**$0**	**$14,425**		**$1,313**		**$0**		**$2,578**	**$18,316**	**$30**
	Total Cost	**$670,668**	**$73,026**	**$271,145**	**$0**	**$1,014,840**		**$95,399**		**$55,897**		**$179,930**	**$1,346,066**	**$2,217**

Owner's Costs			
Preproduction Costs			
6 Months All Labor		$12,717	$21
1 Month Maintenance Materials		$2,756	$5
1 Month Non-fuel Consumables		$273	$0
1 Month Waste Disposal		$302	$0
25% of 1 Months Fuel Cost at 100% CF		$1,613	$3
2% of TPC		$26,921	$44
Total		$44,582	$73
Inventory Capital			
60 day supply of fuel and consumables at 100% CF		$13,449	$22
0.5% of TPC (spare parts)		$6,730	$11
Total		$20,179	$33
Initial Cost for Catalyst and Chemicals		$4,945	$8
Land		$900	$1
Other Owner's Costs		$201,910	$333
Financing Costs		$36,344	$60
Total Overnight Costs (TOC)		**$1,654,925**	**$2,726.3**
TASC Multiplier	(IOU, high risk, 35 year)	1.140	
Total As-Spent Cost (TASC)		**$1,886,615**	**$3,108**

Exhibit 4-139 Case 2 D2A Initial and Annual O&M Expenses

INITIAL & ANNUAL O&M EXPENSES			
Case:	Case 2 D2A - GEE IGCC w/ one WGS bypass (25% CO2 Capture)		
Plant Size (MWe):	607.03	**Heat Rate (Btu/kWh):**	8,895
Primary/Secondary Fuel:	Illinois #6 Bituminous Coal	**Fuel Cost ($/MM Btu):**	1.64
Design/Construction	5 years	**Book Life (yrs):**	30
TPC (Plant Cost) Year:	Jun 2007	**TPI Year:**	2015
Capacity Factor (%):	80	**CO_2 Captured (TPD):**	3,129

OPERATING & MAINTENANCE LABOR

Operating Labor

Operating Labor Rate (base):	$34.65	$/hour
Operating Labor Burden:	30.00	% of base
Labor Overhead Charge:	25.00	% of labor

Operating Labor Requirements per Shift:	units/mod.	Total Plant
Skilled Operator	2.0	2.0
Operator	10.0	10.0
Foreman	1.0	1.0
Lab Tech's etc.	3.0	3.0
TOTAL Operating Jobs	16.0	16.0

	Annual Costs $	Annual Costs $/kW-net
Annual Operating Labor Cost (calc'd)	$6,313,507	$10.401
Maintenance Labor Cost (calc'd)	$14,033,692	$23.119
Administrative & Support Labor (calc'd)	$5,086,800	$8.380
Property Taxes & Insurance	$26,921,314	$44.350
TOTAL FIXED OPERATING COSTS	**$52,355,313**	**$86.249**

VARIABLE OPERATING COSTS

	$	$/kWh-net
Maintenance Material Costs (calc'd)	**$26,455,440**	**0.00622**

Consumables	Consumption Initial	Consumption /Day	Unit Cost	Initial Cost	$	$/kWh-net
Water (/1000 gallons)	0	3,382	1.08	$0	$1,068,152	0.00025
Chemicals						
MU & WT Chem. (lbs)	0	20,148	0.17	$0	$1,018,198	0.00024
Carbon (Mercury Removal) (lb)	55,299	95	1.05	$58,073	$29,132	0.00001
COS Catalyst (m3)	419	0.29	2,397.36	$1,003,295	$200,659	0.00005
Water Gas Shift Catalyst (ft3)	23	0.02	498.83	$11,473	$2,295	0.00000
Selexol Solution (gal)	289,013	59	13.40	$3,872,261	$230,395	0.00005
SCR Catalyst (m3)	0	0	0.00	$0	$0	0.00000
Ammonia (19% NH3) (ton)	0	0	0.00	$0	$0	0.00000
Claus Catalyst (ft3)	0	1.92	131.27	$0	$73,436	0.00002
Subtotal Chemicals				**$4,945,103**	**$1,554,114**	**0.00037**
Other						
Supplemental Fuel (MMBtu)	0	0	0.00	$0	$0	0.00000
Gases, N2 etc. (/100scf)	0	0	0.00	$0	$0	0.00000
L.P. Steam (/1000 pounds)	0	0	0.00	$0	$0	0.00000
Subtotal Other				**$0**	**$0**	**0.00000**
Waste Disposal						
Spent Mercury Sorbent (lb)	0	95	0.42	$0	$11,651	0.00000
Flyash (ton)	0	0	0.00	$0	$0	0.00000
Slag (ton)	0	609	16.23	$0	$2,887,216	0.00068
Subtotal Solid Waste Disposal				**$0**	**$2,898,867**	**$0**
By-products & Emissions						
Sulfur (tons)	0	139	0.00	$0	$0	0.00000
Subtotal By-Products				**$0**	**$0**	**$0**
TOTAL VARIABLE OPERATING COSTS					**$31,976,573**	**0.00752**
Coal FUEL (tons)	**0**	**5,554**	**38.19**	**$0**	**$61,931,158**	**0.01456**

Exhibit 4-140 Case 2 D2B (45%) Capital Costs

Department:	NETL Office of Systems Analysis and Planning			**Cost Base:**	Jun 2007
Project:	CO2 Capture Sensitivity Systems Analysis			**Prepared:**	14-Jun-10
Case:	Case 2 D2B - GEE IGCC w/ one WGS bypass (45% CO2 Capture)				**x $1, 000**
Plant Size:	590.80 MW, net	Capital Charge Factor 0.1773	Capacity Factor 0.8		

		Equipment	Material	Labor		Bare	Eng'g CM H.O. &		Process Cont.		Project Cont.		TOTAL PLANT COST	
Acct No.	**Item/Description**	**Cost**	**Cost**	**Direct**	**Indirect**	**Erected**	**%**	**Total**	**%**	**Total**	**%**	**Total**	**$**	**$/kW**
1	COAL HANDLING SYSTEM													
1.1	Coal Receive & Unload	$3,669	$0	$1,793	$0	$5,462	9.0%	$489	0%	$0	20.0%	$1,190	$7,141	$12
1.2	Coal Stackout & Reclaim	$4,741	$0	$1,149	$0	$5,890	8.8%	$516	0%	$0	20.0%	$1,281	$7,688	$13
1.3	Coal Conveyors & Yd Crus	$4,408	$0	$1,137	$0	$5,545	8.8%	$487	0%	$0	20.0%	$1,206	$7,238	$12
1.4	Other Coal Handling	$1,153	$0	$263	$0	$1,416	8.8%	$124	0%	$0	20.0%	$308	$1,848	$3
1.5	Sorbent Receive & Unload	$0	$0	$0	$0	$0	0.0%	$0	0%	$0	0.0%	$0	$0	$0
1.6	Sorbent Stackout & Reclaim	$0	$0	$0	$0	$0	0.0%	$0	0%	$0	0.0%	$0	$0	$0
1.7	Sorbent Conveyors	$0	$0	$0	$0	$0	0.0%	$0	0%	$0	0.0%	$0	$0	$0
1.8	Other Sorbent Handling	$0	$0	$0	$0	$0	0.0%	$0	0%	$0	0.0%	$0	$0	$0
1.9	Coal & Sorbent Hnd.Foundations	$0	$2,596	$6,492	$0	$9,088	9.6%	$871	0%	$0	20.0%	$1,992	$11,951	$20
	SUBTOTAL 1.	**$13,971**	**$2,596**	**$10,834**	**$0**	**$27,401**		**$2,487**		**$0**		**$5,978**	**$35,866**	**$61**
2	COAL PREP & FEED SYSTEMS													
2.1	Coal Crushing & Drying	w/2.3	$0	w2.3	$0	$0	0.0%	0	0%	0	0.0%	$0	$0	$0
2.2	Prepared Coal Storage & Feed	$1,565	$374	$245	$0	$2,185	8.6%	187	0%	0	20.0%	$474	$2,846	$5
2.3	Slurry Prep & Feed	$21,396	$0	$9,444	$0	$30,840	9.1%	2,802	5%	1,542	20.0%	$7,037	$42,221	$71
2.4	Misc. Coal Prep & Feed	$860	$626	$1,877	$0	$3,364	9.2%	309	0%	0	20.0%	$735	$4,408	$7
2.5	Sorbent Prep Equipment	$0	$0	$0	$0	$0	0.0%	0	0%	0	15.0%	$0	$0	$0
2.6	Sorbent Storage & Feed	$0	$0	$0	$0	$0	0.0%	0	0%	0	15.0%	$0	$0	$0
2.7	Sorbent Injection System	$0	$0	$0	$0	$0	0.0%	0	0%	0	0.0%	$0	$0	$0
2.8	Booster Air Supply System	$0	$0	$0	$0	$0	0.0%	0	0%	0	0.0%	$0	$0	$0
2.9	Coal & Sorbent Feed Foundation	$0	$3,345	$2,746	$0	$6,091	9.3%	564	0%	0	20.0%	$1,331	$7,986	$14
	SUBTOTAL 2.	**$23,821**	**$4,345**	**$14,313**	**$0**	**$42,479**		**$3,862**		**$1,542**		**$9,577**	**$57,460**	**$97**
3	FEEDWATER & MISC. BOP SYSTEMS													
3.1	Feedwater System	2,859	4,909	2,592	0	10,360	9.3%	960	0%	0	20.0%	$2,264	$13,583	$23
3.2	Water Makeup & Pretreating	648	68	362	0	1,078	9.5%	103	0%	0	30.0%	$354	$1,534	$3
3.3	Other Feedwater Subsystems	1,564	529	476	0	2,568	9.0%	231	0%	0	20.0%	$560	$3,359	$6
3.4	Service Water Systems	371	763	2,649	0	3,783	9.8%	369	0%	0	30.0%	$1,246	$5,398	$9
3.5	Other Boiler Plant Systems	1,989	771	1,910	0	4,671	9.5%	443	0%	0	20.0%	$1,023	$6,137	$10
3.6	FO Supply Sys & Nat Gas	$313	$591	$551	$0	1,454	9.6%	140	0%	0	20.0%	$319	$1,913	$3
3.7	Waste Treatment Equipment	906	0	552	0	1,458	9.7%	142	0%	0	30.0%	$480	$2,080	$4
3.8	Misc. Power Plant Equipment	$1,112	$149	$571	$0	1,831	9.7%	177	0%	0	30.0%	$602	$2,610	$4
	SUBTOTAL 3.	**$9,761**	**$7,779**	**$9,663**	**$0**	**$27,203**		**$2,564**		**$0**		**$6,847**	**$36,614**	**$62**
4	GASIFIER & ACCESSORIES													
4.1	Syngas Cooler Gasifier System	$111,081	$0	$60,864	$0	$171,945	9.2%	$15,752	13.9%	$23,862	15.3%	$32,439	$243,998	$413
4.2	Syngas Cooler (w/ Gasifier - $)	w/4.1	$0	w/ 4.1	$0	$0	0.0%	$0	0%	$0	0.0%	$0	$0	$0
4.3	ASU/Oxidant Compression	$188,356	$0	w/equip.	$0	$188,356	9.7%	$18,257	0%	$0	10.0%	$20,661	$227,274	$385
4.4	Scrubber & Low Temperature Cooling	5,901	$4,803	$4,999	$0	$15,704	9.6%	$1,508	0%	$0	20.0%	$3,442	$20,655	$35
4.5	Black Water & Sour Gas Section	w/4.1	$0	w/4.1	$0	$0	0.0%	$0	0%	$0	0.0%	$0	$0	$0
4.6	Soot Recovery & SARU	$1,800	$855	$1,689	$0	$4,343	9.6%	$419	0%	$0	20.0%	$952	$5,714	$10
4.7	Major Component Rigging	w/4.1	$0	w/4.1	$0	$0	0.0%	$0	0%	$0	0.0%	$0	$0	$0
4.8	Gasification Foundations	$0	$6,327	$5,282	$0	$11,609	9.3%	$1,076	0%	$0	25.0%	$3,171	$15,856	$27
	SUBTOTAL 4.	**$307,138**	**$11,985**	**$72,835**	**$0**	**$391,958**		**$37,011**		**$23,862**		**$60,667**	**$513,498**	**$869**

Exhibit 4-140 Case 2 D2B (45%) Capital Costs (continued)

Department:	NETL Office of Systems Analysis and Planning			**Cost Base:**	Jun 2007
Project:	CO2 Capture Sensitivity Systems Analysis			**Prepared:**	14-Jun-10
Case:	Case 2 D2B - GEE IGCC w/ one WGS bypass (45% CO2 Capture)				**x $1, 000**
Plant Size:	590.80 MW, net	Capital Charge Factor 0.1773	Capacity Factor 0.8		

Acct No.	Item/Description	Equipment Cost	Material Cost	Labor Direct	Labor Indirect	Bare Erected	Eng'g CM H.O. & %	Eng'g CM H.O. & Total	Process Cont. %	Process Cont. Total	Project Cont. %	Project Cont. Total	TOTAL PLANT COST $	TOTAL PLANT COST $/kW
5A	GAS CLEANUP & PIPING							*						
5A.1	Double Stage Selexol	$60,122	$0	$51,015	$0	$111,138	9.7%	$10,748	20%	$22,228	20.0%	$28,823	$172,936	$293
5A.2	Elemental Sulfur Plant	$10,093	$2,011	$13,021	$0	$25,125	9.7%	$2,441	0%	$0	20.0%	$5,513	$33,079	$56
5A.3	Mercury Removal	$1,161	$0	$884	$0	$2,045	9.7%	$197	5%	$102	20.0%	$469	$2,814	$5
5A.4	Shift Reactors	$2,918	$0	$1,175	$0	$4,092	9.6%	$392	0%	$0	20.0%	$897	$5,382	$9
5A.5	COS Hydrolysis	$3,705	$0	$4,839	$0	$8,544	9.7%	$831	0%	$0	20.0%	$1,875	$11,250	$19
5A.6	Particulate Removal	$0	$0	$0	$0	$0	0.0%	$0	0%	$0	10.0%	$0	$0	$0
5A.7	Blowback Gas Systems	$1,316	$0	$249	$0	$1,566	12.2%	$191	0%	$0	20.0%	$351	$2,108	$4
5A.8	Fuel Gas Piping	$0	$611	$428	$0	$1,039	9.3%	$96	0%	$0	20.0%	$227	$1,362	$2
5A.9	HGCU Foundations	$0	$625	$403	$0	$1,027	9.2%	$94	0%	$0	30.0%	$337	$1,458	$2
5A.10	Open	$0	$0	$0	$0	$0	0.0%	$0	0%	$0	0.0%	$0	$0	$0
	SUBTOTAL 5A.	**$79,316**	**$3,247**	**$72,013**	**$0**	**$154,576**		**$14,991**		**$22,330**		**$38,492**	**$230,389**	**$390**
5B	CO2 REMOVAL & COMPRESSION													
5B.1	CO2 Removal System	$0	$0	$0	$0	$0	9.6%	$0	0%	$0	20.0%	$0	$0	$0
5B.2	CO2 Compression & Drying	$9,620	$0	$5,897	$0	$15,517	9.6%	$1,495	0%	$0	20.0%	$3,402	$20,414	$35
5B.3	CO2 Pipeline											0	0	0
5B.4	CO2 Storage											0	0	0
5B.5	CO2 Monitoring											0	0	0
	SUBTOTAL 5B.	**$9,620**	**$0**	**$5,897**	**$0**	**$15,517**		**$1,495**		**$0**		**$3,402**	**$20,414**	**$35**
6	COMBUSTION TURBINE/ACCESSORIES													
6.1	Combustion Turbine Generator	$92,026	$0	$6,583	$0	$98,609	9.5%	9,348	10%	9,861	10.0%	11,782	129,600	219
6.2	Syngas Expander	$5,550	$0	$767	$0	$6,316	9.5%	600	0%	0	15.0%	1,038	7,954	13
6.3	Compressed Air Piping	$0	$0	$0	$0	$0	0.0%	0	0%	0	0.0%	0	0	0
6.4	Combustion Turbine Foundations	$0	$887	$982	$0	$1,868	9.4%	175	0%	0	30.0%	613	2,656	4
	SUBTOTAL 6.	**$97,576**	**$887**	**$8,331**	**$0**	**$106,794**		**$10,123**		**$9,861**		**$13,432**	**$140,210**	**$237**
7	HRSG, DUCTING & STACK													
7.1	Heat Recovery Steam Generator	$34,421	$0	$4,894	$0	$39,315	9.5%	$3,738	0%	$0	10.0%	$4,305	$47,359	$80
7.2	Open	$0	$0	$0	$0	$0	0.0%	$0	0%	$0	0.0%	$0	$0	$0
7.3	Ductwork	$0	$1,717	$1,225	$0	$2,942	8.8%	$258	0%	$0	20.0%	$640	$3,840	$7
7.4	Stack	$3,350	$0	$1,258	$0	$4,609	9.6%	$442	0%	$0	10.0%	$505	$5,555	$9
7.9	HRSG, Duct & Stack Foundations	$0	$671	$645	$0	$1,316	9.3%	$122	0%	$0	30.0%	$431	$1,870	$3
	SUBTOTAL 7.	**$37,771**	**$2,388**	**$8,022**	**$0**	**$48,182**		**$4,560**		**$0**		**$5,882**	**$58,624**	**$99**
8	STEAM TURBINE GENERATOR													
8.1	Steam TG & Accessories	$29,158	$0	$4,985	$0	$34,143	9.6%	$3,276	0%	$0	10.0%	$3,742	$41,161	$70
8.2	Turbine Plant Auxiliaries	$202	$0	$463	$0	$665	9.8%	$65	0%	$0	10.0%	$73	$804	$1
8.3	Condenser & Auxiliaries	$5,226	$0	$1,534	$0	$6,761	9.6%	$646	0%	$0	10.0%	$741	$8,148	$14
8.4	Steam Piping	$5,048	$0	$3,551	$0	$8,598	8.6%	$739	0%	$0	25.0%	$2,334	$11,671	$20
8.9	TG Foundations	$0	$1,002	$1,695	$0	$2,697	9.5%	$256	0%	$0	30.0%	$886	$3,838	$6
	SUBTOTAL 8.	**$39,634**	**$1,002**	**$12,228**	**$0**	**$52,864**		**$4,982**		**$0**		**$7,776**	**$65,622**	**$111**
9	COOLING WATER SYSTEM													
9.1	Cooling Towers	$6,825	$0	$1,242	$0	$8,067	9.5%	$768	0%	$0	15.0%	$1,325	$10,160	$17
9.2	Circulating Water Pumps	$1,767	$0	$128	$0	$1,895	8.4%	$160	0%	$0	15.0%	$308	$2,363	$4
9.3	Circ. Water System Auxiliaries	$149	$0	$21	$0	$170	9.5%	$16	0%	$0	15.0%	$28	$215	$0
9.4	Circ. Water Piping	$0	$6,223	$1,613	$0	$7,836	9.0%	$708	0%	$0	20.0%	$1,709	$10,253	$17
9.5	Make-up Water System	$356	$0	$509	$0	$865	9.6%	$83	0%	$0	20.0%	$190	$1,138	$2
9.6	Component Cooling Water System	$735	$879	$625	$0	$2,238	9.4%	$210	0%	$0	20.0%	$490	$2,938	$5
9.9	Circ. Water System Foundations	$0	$2,284	$3,883	$0	$6,167	9.5%	$585	0%	$0	30.0%	$2,026	$8,777	$15
	SUBTOTAL 9.	**$9,832**	**$9,385**	**$8,021**	**$0**	**$27,238**		**$2,530**		**$0**		**$6,075**	**$35,843**	**$61**

Exhibit 4-140 Case 2 D2B (45%) Capital Costs (continued)

Department:	NETL Office of Systems Analysis and Planning			**Cost Base:**	Jun 2007
Project:	CO2 Capture Sensitivity Systems Analysis			**Prepared:**	14-Jun-10
Case:	Case 2 D2B - GEE IGCC w/ one WGS bypass (45% CO2 Capture)				**x $1, 000**
Plant Size:	590.80 MW, net	Capital Charge Factor 0.1773	Capacity Factor 0.8		

Acct No.	Item/Description	Equipment Cost	Material Cost	Labor Direct	Labor Indirect	Bare Erected	Eng'g CM H.O. & %	Eng'g CM H.O. & Total	Process Cont. %	Process Cont. Total	Project Cont. %	Project Cont. Total	TOTAL PLANT COST $	TOTAL PLANT COST $/kW
10	ASH/SPENT SORBENT HANDLING SYS													
10.1	Slag Dewatering & Cooling	$11,873	$6,547	$13,301	$0	$31,721	9.7%	$3,062	0%	$0	10.0%	$3,478	$38,261	$65
10.2	Gasifier Ash Depressurization	w/10.1	w/10.1	w/10.1	$0	$0	0.0%	$0	0%	$0	0.0%	$0	$0	$0
10.3	Cleanup Ash Depressurization	w/10.1	w/10.1	w/10.1	$0	$0	0.0%	$0	0%	$0	0.0%	$0	$0	$0
10.4	High Temperature Ash Piping	$0	$0	$0	$0	$0	0.0%	$0	0%	$0	0.0%	$0	$0	$0
10.5	Other Ash Recovery Equipment	$0	$0	$0	$0	$0	0.0%	$0	0%	$0	0.0%	$0	$0	$0
10.6	Ash Storage Silos	$577	$0	$628	$0	$1,205	9.7%	$117	0%	$0	15.0%	$198	$1,520	$3
10.7	Ash Transport & Feed Equipment	$774	$0	$187	$0	$961	9.3%	$90	0%	$0	15.0%	$158	$1,208	$2
10.8	Misc. Ash Handling Equipment	$1,195	$1,465	$438	$0	$3,098	9.5%	$295	0%	$0	15.0%	$509	$3,902	$7
10.9	Ash/Spent Sorbent Foundation	$0	$51	$64	$0	$115	9.4%	$11	0%	$0	30.0%	$38	$164	$0
	SUBTOTAL 10.	**$14,420**	**$8,063**	**$14,617**	**$0**	**$37,100**		**$3,574**		**$0**		**$4,381**	**$45,055**	**$76**
11	ACCESSORY ELECTRIC PLANT													
11.1	Generator Equipment	$958	$0	$948	$0	$1,906	9.5%	$182	0%	$0	10.0%	$209	$2,296	$4
11.2	Station Service Equipment	$4,307	$0	$388	$0	$4,695	9.2%	$433	0%	$0	10.0%	$513	$5,641	$10
11.3	Switchgear & Motor Control	$7,963	$0	$1,448	$0	$9,411	9.3%	$873	0%	$0	15.0%	$1,543	$11,826	$20
11.4	Conduit & Cable Tray	$0	$3,699	$12,203	$0	$15,902	9.7%	$1,538	0%	$0	25.0%	$4,360	$21,800	$37
11.5	Wire & Cable	$0	$7,068	$4,644	$0	$11,711	7.3%	$851	0%	$0	25.0%	$3,141	$15,703	$27
11.6	Protective Equipment	$0	$686	$2,496	$0	$3,182	9.8%	$311	0%	$0	15.0%	$524	$4,016	$7
11.7	Standby Equipment	$236	$0	$230	$0	$466	9.5%	$44	0%	$0	15.0%	$77	$587	$1
11.8	Main Power Transformers	$17,725	$0	$146	$0	$17,870	7.6%	$1,352	0%	$0	15.0%	$2,883	$22,105	$37
11.9	Electrical Foundations	$0	$159	$416	$0	$574	9.6%	$55	0%	$0	30.0%	$189	$818	$1
	SUBTOTAL 11.	**$31,188**	**$11,611**	**$22,918**	**$0**	**$65,718**		**$5,638**		**$0**		**$13,437**	**$84,793**	**$144**
12	INSTRUMENTATION & CONTROL													
12.1	IGCC Control Equipment	w/4.1	$0	w/4.1	$0	$0	0.0%	$0	0%	$0	0.0%	$0	$0	$0
12.2	Combustion Turbine Control	w/6.1	$0	w/6.1	$0	$0	0.0%	$0	0%	$0	0.0%	$0	$0	$0
12.3	Steam Turbine Control	w/8.1	$0	w/8.1	$0	$0	0.0%	$0	0%	$0	0.0%	$0	$0	$0
12.4	Other Major Component Control	$1,069	$0	$713	$0	$1,782	9.5%	$169	5%	$89	15.0%	$306	$2,346	$4
12.5	Signal Processing Equipment	w/12.7	$0	w/12.7	$0	$0	0.0%	$0	0%	$0	0.0%	$0	$0	$0
12.6	Control Boards,Panels & Racks	$246	$0	$157	$0	$403	9.5%	$38	5%	$20	20.0%	$92	$554	$1
12.7	Computer & Accessories	$5,700	$0	$182	$0	$5,882	9.2%	$540	5%	$294	10.0%	$672	$7,388	$13
12.8	Instrument Wiring & Tubing	$0	$1,991	$4,071	$0	$6,062	8.5%	$514	5%	$303	25.0%	$1,720	$8,599	$15
12.9	Other I & C Equipment	$3,810	$0	$1,850	$0	$5,660	9.4%	$533	5%	$283	15.0%	$971	$7,447	$13
	SUBTOTAL 12.	**$10,824**	**$1,991**	**$6,974**	**$0**	**$19,790**		**$1,793**		**$989**		**$3,761**	**$26,334**	**$45**
13	IMPROVEMENTS TO SITE													
13.1	Site Preparation	0	108	2,311	0	2,420	9.9%	240	0%	0	30.0%	798	3,458	6
13.2	Site Improvements	0	1,923	2,556	0	4,479	9.9%	442	0%	0	30.0%	1,476	6,398	11
13.3	Site Facilities	3,447	0	3,637	0	7,084	9.9%	698	0%	0	30.0%	2,335	10,117	17
	SUBTOTAL 13.	**$3,447**	**$2,032**	**$8,504**	**$0**	**$13,983**		**$1,380**		**$0**		**$4,609**	**$19,972**	**$34**

Exhibit 4-140 Case 2 D2B (45%) Capital Costs (continued)

Department:	NETL Office of Systems Analysis and Planning			**Cost Base:**	Jun 2007
Project:	CO2 Capture Sensitivity Systems Analysis			**Prepared:**	27-May-11
Case:	Case 2 D2B - GEE IGCC w/ one WGS bypass (45% CO2 Capture)				**x $1, 000**
Plant Size:	590.80 MW, net	Capital Charge Factor	0.1773	Capacity Factor	0.8

Acct No.	Item/Description	Equipment Cost	Material Cost	Labor Direct	Labor Indirect	Bare Erected	Eng'g CM H.O. & %	Eng'g CM H.O. & Total	Process Cont. %	Process Cont. Total	Project Cont. %	Project Cont. Total	TOTAL PLANT COST $	TOTAL PLANT COST $/kW
14	BUILDINGS & STRUCTURES													
14.1	Combustion Turbine Area	$0	$264	$149	$0	$413	8.8%	$36	0%	$0	20.0%	$90	$539	$1
14.2	Steam Turbine Building	$0	$2,367	$3,371	$0	$5,738	9.2%	$528	0%	$0	15.0%	$940	$7,206	$12
14.3	Administration Building	$0	$877	$636	$0	$1,514	8.9%	$135	0%	$0	15.0%	$247	$1,896	$3
14.4	Circulation Water Pumphouse	$0	$159	$84	$0	$243	8.8%	$21	0%	$0	15.0%	$40	$304	$1
14.5	Water Treatment Buildings	$0	$545	$532	$0	$1,077	9.0%	$97	0%	$0	15.0%	$176	$1,351	$2
14.6	Machine Shop	$0	$449	$307	$0	$756	8.9%	$67	0%	$0	15.0%	$124	$947	$2
14.7	Warehouse	$0	$725	$468	$0	$1,193	8.9%	$106	0%	$0	15.0%	$195	$1,493	$3
14.8	Other Buildings & Structures	$0	$434	$338	$0	$772	8.9%	$69	0%	$0	20.0%	$168	$1,010	$2
14.9	Waste Treating Building & Str.	$0	$966	$1,847	$0	$2,813	9.3%	$262	0%	$0	20.0%	$615	$3,690	$6
	SUBTOTAL 14.	**$0**	**$6,786**	**$7,733**	**$0**	**$14,520**		**$1,322**		**$0**		**$2,595**	**$18,436**	**$31**
	Total Cost	**$688,318**	**$74,099**	**$282,905**	**$0**	**$1,045,321**		**$98,313**		**$58,584**		**$186,909**	**$1,389,128**	**$2,351**

Owner's Costs			
Preproduction Costs			
6 Months All Labor		$12,980	$22
1 Month Maintenance Materials		$2,839	$5
1 Month Non-fuel Consumables		$311	$1
1 Month Waste Disposal		$307	$1
25% of 1 Months Fuel Cost at 100% CF		$1,638	$3
2% of TPC		$27,783	$47
Total		$45,857	$78
Inventory Capital			
60 day supply of fuel and consumables at 100% CF		$13,726	$23
0.5% of TPC (spare parts)		$6,946	$12
Total		$20,672	$35
Initial Cost for Catalyst and Chemicals		$5,808	$10
Land		$900	$2
Other Owner's Costs		$208,369	$353
Financing Costs		$37,506	$63
Total Overnight Costs (TOC)		**$1,708,241**	**$2,891**
TASC Multiplier	(IOU, high risk, 35 year)	1.140	
Total As-Spent Cost (TASC)		**$1,947,394**	**$3,296**

Exhibit 4-141 Case 2 D2B Initial and Annual O&M Expenses

INITIAL & ANNUAL O&M EXPENSES			
Case:	Case 2 D2B - GEE IGCC w/ one WGS bypass (45% CO2 Capture)		
Plant Size (MWe):	590.80	**Heat Rate (Btu/kWh):**	9,283
Primary/Secondary Fuel:	Illinois #6 Bituminous Coal	**Fuel Cost ($/MM Btu):**	1.64
Design/Construction	5 years	**Book Life (yrs):**	30
TPC (Plant Cost) Year:	Jun 2007	**TPI Year:**	2015
Capacity Factor (%):	80	**CO_2 Captured (TPD):**	5,736

OPERATING & MAINTENANCE LABOR

Operating Labor

Operating Labor Rate (base):	$34.65	$/hour
Operating Labor Burden:	30.00	% of base
Labor Overhead Charge:	25.00	% of labor

Operating Labor Requirements per Shift:	units/mod.	Total Plant
Skilled Operator	2.0	2.0
Operator	10.0	10.0
Foreman	1.0	1.0
Lab Tech's etc.	3.0	3.0
TOTAL Operating Jobs	16.0	16.0

	Annual Costs $	Annual Costs $/kW-net
Annual Operating Labor Cost (calc'd)	$6,313,507	$10.686
Maintenance Labor Cost (calc'd)	$14,455,208	$24.467
Administrative & Support Labor (calc'd)	$5,192,179	$8.788
Property Taxes & Insurance	$27,782,556	$47.025
TOTAL FIXED OPERATING COSTS	**$53,743,450**	**$90.967**

VARIABLE OPERATING COSTS

	$	$/kWh-net
Maintenance Material Costs (calc'd)	**$27,250,055**	**0.00658**

Consumables	Consumption Initial	Consumption /Day	Unit Cost	Initial Cost	$	$/kWh-net
Water (/1000 gallons)	0	3,627	1.08	$0	$1,145,699	0.00028
Chemicals						
MU & WT Chem. (lbs)	0	21,611	0.17	$0	$1,092,119	0.00026
Carbon (Mercury Removal) (lb)	62,618	107	1.05	$65,760	$32,812	0.00001
COS Catalyst (m3)	444	0.30	2,397.36	$1,064,667	$212,933	0.00005
Water Gas Shift Catalyst (ft3)	1,535	1.05	498.83	$765,706	$153,141	0.00004
Selexol Solution (gal)	291,937	70	13.40	$3,911,435	$273,860	0.00007
SCR Catalyst (m3)	0	0	0.00	$0	$0	0.00000
Ammonia (19% NH3) (ton)	0	0	0.00	$0	$0	0.00000
Claus Catalyst (ft3)	0	1.95	131.27	$0	$74,590	0.00002
Subtotal Chemicals				**$5,807,568**	**$1,839,455**	**0.00044**
Other						
Supplemental Fuel (MMBtu)	0	0	0.00	$0	$0	0.00000
Gases, N2 etc. (/100scf)	0	0	0.00	$0	$0	0.00000
L.P. Steam (/1000 pounds)	0	0	0.00	$0	$0	0.00000
Subtotal Other				**$0**	**$0**	**0.00000**
Waste Disposal						
Spent Mercury Sorbent (lb)	0	107	0.42	$0	$13,122	0.00000
Flyash (ton)	0	0	0.00	$0	$0	0.00000
Slag (ton)	0	619	16.23	$0	$2,932,471	0.00071
Subtotal Solid Waste Disposal				**$0**	**$2,945,593**	**$0**
By-products & Emissions						
Sulfur (tons)	0	141	0.00	$0	$0	0.00000
Subtotal By-Products				**$0**	**$0**	**$0**
TOTAL VARIABLE OPERATING COSTS					**$33,180,803**	**0.00801**
Coal FUEL (tons)	**0**	**5,641**	**38.19**	**$0**	**$62,902,016**	**0.01519**

Exhibit 4-142 Case 2 D2C (60%) Capital Costs

Department:	NETL Office of Systems Analysis and Planning			**Cost Base:**	Jun 2007
Project:	CO2 Capture Sensitivity Systems Analysis			**Prepared:**	14-Jun-10
Case:	Case 2 D2C - GEE IGCC w/ one WGS bypass (60% CO2 Capture)				**x $1, 000**
Plant Size:	578.38 MW, net	Capital Charge Factor 0.1773	Capacity Factor 0.8		

Acct No.	Item/Description	Equipment Cost	Material Cost	Labor Direct	Labor Indirect	Bare Erected	Eng'g CM H.O. & %	Eng'g CM H.O. & Total	Process Cont. %	Process Cont. Total	Project Cont. %	Project Cont. Total	TOTAL PLANT COST $	TOTAL PLANT COST $/kW
1	COAL HANDLING SYSTEM													
1.1	Coal Receive & Unload	$3,698	$0	$1,807	$0	$5,505	9.0%	$493	0%	$0	20.0%	$1,200	$7,198	$12
1.2	Coal Stackout & Reclaim	$4,778	$0	$1,158	$0	$5,937	8.8%	$520	0%	$0	20.0%	$1,291	$7,749	$13
1.3	Coal Conveyors & Yd Crus	$4,443	$0	$1,146	$0	$5,589	8.8%	$491	0%	$0	20.0%	$1,216	$7,295	$13
1.4	Other Coal Handling	$1,162	$0	$265	$0	$1,428	8.8%	$125	0%	$0	20.0%	$310	$1,863	$3
1.5	Sorbent Receive & Unload	$0	$0	$0	$0	$0	0.0%	$0	0%	$0	0.0%	$0	$0	$0
1.6	Sorbent Stackout & Reclaim	$0	$0	$0	$0	$0	0.0%	$0	0%	$0	0.0%	$0	$0	$0
1.7	Sorbent Conveyors	$0	$0	$0	$0	$0	0.0%	$0	0%	$0	0.0%	$0	$0	$0
1.8	Other Sorbent Handling	$0	$0	$0	$0	$0	0.0%	$0	0%	$0	0.0%	$0	$0	$0
1.9	Coal & Sorbent Hnd.Foundations	$0	$2,617	$6,543	$0	$9,160	9.6%	$878	0%	$0	20.0%	$2,008	$12,045	$21
	SUBTOTAL 1.	**$14,081**	**$2,617**	**$10,920**	**$0**	**$27,618**		**$2,507**		**$0**		**$6,025**	**$36,150**	**$63**
2	COAL PREP & FEED SYSTEMS													
2.1	Coal Crushing & Drying	w/2.3	$0	w2.3	$0	$0	0.0%	0	0%	0	0.0%	$0	$0	$0
2.2	Prepared Coal Storage & Feed	$1,578	$378	$247	$0	$2,203	8.6%	188	0%	0	20.0%	$478	$2,870	$5
2.3	Slurry Prep & Feed	$21,579	$0	$9,524	$0	$31,103	9.1%	2,826	5%	1,555	20.0%	$7,097	$42,580	$74
2.4	Misc. Coal Prep & Feed	$868	$631	$1,893	$0	$3,392	9.2%	312	0%	0	20.0%	$741	$4,445	$8
2.5	Sorbent Prep Equipment	$0	$0	$0	$0	$0	0.0%	0	0%	0	15.0%	$0	$0	$0
2.6	Sorbent Storage & Feed	$0	$0	$0	$0	$0	0.0%	0	0%	0	15.0%	$0	$0	$0
2.7	Sorbent Injection System	$0	$0	$0	$0	$0	0.0%	0	0%	0	0.0%	$0	$0	$0
2.8	Booster Air Supply System	$0	$0	$0	$0	$0	0.0%	0	0%	0	0.0%	$0	$0	$0
2.9	Coal & Sorbent Feed Foundation	$0	$3,373	$2,769	$0	$6,142	9.3%	569	0%	0	20.0%	$1,342	$8,053	$14
	SUBTOTAL 2.	**$24,025**	**$4,382**	**$14,433**	**$0**	**$42,840**		**$3,895**		**$1,555**		**$9,658**	**$57,948**	**$100**
3	FEEDWATER & MISC. BOP SYSTEMS													
3.1	Feedwater System	2,839	4,875	2,573	0	10,287	9.3%	953	0%	0	20.0%	$2,248	$13,488	$23
3.2	Water Makeup & Pretreating	672	70	375	0	1,117	9.5%	106	0%	0	30.0%	$367	$1,590	$3
3.3	Other Feedwater Subsystems	1,553	525	472	0	2,550	9.0%	229	0%	0	20.0%	$556	$3,336	$6
3.4	Service Water Systems	384	791	2,746	0	3,922	9.8%	383	0%	0	30.0%	$1,291	$5,596	$10
3.5	Other Boiler Plant Systems	2,062	799	1,980	0	4,842	9.5%	459	0%	0	20.0%	$1,060	$6,361	$11
3.6	FO Supply Sys & Nat Gas	$314	$592	$553	$0	1,459	9.6%	140	0%	0	20.0%	$320	$1,919	$3
3.7	Waste Treatment Equipment	939	0	573	0	1,511	9.7%	147	0%	0	30.0%	$498	$2,156	$4
3.8	Misc. Power Plant Equipment	$1,115	$149	$573	$0	1,837	9.7%	177	0%	0	30.0%	$604	$2,619	$5
	SUBTOTAL 3.	**$9,878**	**$7,802**	**$9,846**	**$0**	**$27,526**		**$2,596**		**$0**		**$6,944**	**$37,066**	**$64**
4	GASIFIER & ACCESSORIES													
4.1	Syngas Cooler Gasifier System	$112,074	$0	$61,408	$0	$173,483	9.2%	$15,892	13.9%	$24,076	15.3%	$32,729	$246,180	$426
4.2	Syngas Cooler (w/ Gasifier - $)	w/4.1	$0	w/ 4.1	$0	$0	0.0%	$0	0%	$0	0.0%	$0	$0	$0
4.3	ASU/Oxidant Compression	$190,054	$0	w/equip.	$0	$190,054	9.7%	$18,422	0%	$0	10.0%	$20,848	$229,323	$396
4.4	Scrubber & Low Temperature Cooling	5,954	$4,846	$5,044	$0	$15,845	9.6%	$1,521	0%	$0	20.0%	$3,473	$20,839	$36
4.5	Black Water & Sour Gas Section	w/4.1	$0	w/4.1	$0	$0	0.0%	$0	0%	$0	0.0%	$0	$0	$0
4.6	Soot Recovery & SARU	$1,816	$862	$1,704	$0	$4,382	9.6%	$422	0%	$0	20.0%	$961	$5,765	$10
4.7	Major Component Rigging	w/4.1	$0	w/4.1	$0	$0	0.0%	$0	0%	$0	0.0%	$0	$0	$0
4.8	Gasification Foundations	$0	$6,384	$5,329	$0	$11,713	9.3%	$1,085	0%	$0	25.0%	$3,200	$15,998	$28
	SUBTOTAL 4.	**$309,898**	**$12,092**	**$73,486**	**$0**	**$395,476**		**$37,343**		**$24,076**		**$61,211**	**$518,106**	**$896**

Exhibit 4-142 Case 2 D2C (60%) Capital Costs (continued)

Department:	NETL Office of Systems Analysis and Planning			**Cost Base:**	Jun 2007
Project:	CO2 Capture Sensitivity Systems Analysis			**Prepared:**	14-Jun-10
Case:	Case 2 D2C - GEE IGCC w/ one WGS bypass (60% CO2 Capture)				**x $1, 000**
Plant Size:	578.38 MW, net	Capital Charge Factor 0.1773	Capacity Factor 0.8		

Acct No.	Item/Description	Equipment Cost	Material Cost	Labor Direct	Labor Indirect	Bare Erected	Eng'g CM H.O. & %	Eng'g CM H.O. & Total	Process Cont. %	Process Cont. Total	Project Cont. %	Project Cont. Total	TOTAL PLANT COST $	TOTAL PLANT COST $/kW
5A	GAS CLEANUP & PIPING							*						
5A.1	Double Stage Selexol	$64,485	$0	$54,717	$0	$119,201	9.7%	$11,528	20%	$23,840	20.0%	$30,914	$185,484	$321
5A.2	Elemental Sulfur Plant	$10,179	$2,029	$13,133	$0	$25,341	9.7%	$2,462	0%	$0	20.0%	$5,561	$33,363	$58
5A.3	Mercury Removal	$1,238	$0	$942	$0	$2,180	9.7%	$210	5%	$109	20.0%	$500	$2,999	$5
5A.4	Shift Reactors	$4,409	$0	$1,775	$0	$6,184	9.6%	$593	0%	$0	20.0%	$1,355	$8,132	$14
5A.5	COS Hydrolysis	$3,830	$0	$5,001	$0	$8,831	9.7%	$859	0%	$0	20.0%	$1,938	$11,627	$20
5A.6	Particulate Removal	$0	$0	$0	$0	$0	0.0%	$0	0%	$0	10.0%	$0	$0	$0
5A.7	Blowback Gas Systems	$1,328	$0	$252	$0	$1,580	12.2%	$193	0%	$0	20.0%	$355	$2,127	$4
5A.8	Fuel Gas Piping	$0	$621	$435	$0	$1,056	9.3%	$98	0%	$0	20.0%	$231	$1,385	$2
5A.9	HGCU Foundations	$0	$631	$407	$0	$1,038	9.2%	$95	0%	$0	30.0%	$340	$1,473	$3
5A.10	Open	$0	$0	$0	$0	$0	0.0%	$0	0%	$0	0.0%	$0	$0	$0
	SUBTOTAL 5A.	**$85,469**	**$3,281**	**$76,661**	**$0**	**$165,411**		**$16,038**		**$23,949**		**$41,193**	**$246,590**	**$426**
5B	CO2 REMOVAL & COMPRESSION													
5B.1	CO2 Removal System	$0	$0	$0	$0	$0	9.6%	$0	0%	$0	20.0%	$0	$0	$0
5B.2	CO2 Compression & Drying	$12,539	$0	$7,686	$0	$20,226	9.6%	$1,948	0%	$0	20.0%	$4,435	$26,609	$46
5B.3	CO2 Pipeline											0	0	0
5B.4	CO2 Storage											0	0	0
5B.5	CO2 Monitoring											0	0	0
	SUBTOTAL 5B.	**$12,539**	**$0**	**$7,686**	**$0**	**$20,226**		**$1,948**		**$0**		**$4,435**	**$26,609**	**$46**
6	COMBUSTION TURBINE/ACCESSORIES													
6.1	Combustion Turbine Generator	$92,026	$0	$6,583	$0	$98,609	9.5%	9,348	10%	9,861	10.0%	11,782	129,600	224
6.2	Syngas Expander	$5,550	$0	$767	$0	$6,316	9.5%	600	0%	0	15.0%	1,038	7,954	14
6.3	Compressed Air Piping	$0	$0	$0	$0	$0	0.0%	0	0%	0	0.0%	0	0	0
6.4	Combustion Turbine Foundations	$0	$887	$982	$0	$1,868	9.4%	175	0%	0	30.0%	613	2,656	5
	SUBTOTAL 6.	**$97,576**	**$887**	**$8,331**	**$0**	**$106,794**		**$10,123**		**$9,861**		**$13,432**	**$140,210**	**$242**
7	HRSG, DUCTING & STACK													
7.1	Heat Recovery Steam Generator	$34,159	$0	$4,857	$0	$39,016	9.5%	$3,710	0%	$0	10.0%	$4,273	$46,999	$81
7.2	Open	$0	$0	$0	$0	$0	0.0%	$0	0%	$0	0.0%	$0	$0	$0
7.3	Ductwork	$0	$1,722	$1,228	$0	$2,950	8.8%	$259	0%	$0	20.0%	$642	$3,850	$7
7.4	Stack	$3,359	$0	$1,262	$0	$4,620	9.6%	$443	0%	$0	10.0%	$506	$5,569	$10
7.9	HRSG, Duct & Stack Foundations	$0	$673	$646	$0	$1,319	9.3%	$123	0%	$0	30.0%	$433	$1,875	$3
	SUBTOTAL 7.	**$37,518**	**$2,394**	**$7,993**	**$0**	**$47,906**		**$4,534**		**$0**		**$5,853**	**$58,293**	**$101**
8	STEAM TURBINE GENERATOR													
8.1	Steam TG & Accessories	$29,018	$0	$4,961	$0	$33,978	9.6%	$3,260	0%	$0	10.0%	$3,724	$40,963	$71
8.2	Turbine Plant Auxiliaries	$201	$0	$461	$0	$662	9.8%	$65	0%	$0	10.0%	$73	$800	$1
8.3	Condenser & Auxiliaries	$5,178	$0	$1,520	$0	$6,699	9.6%	$640	0%	$0	10.0%	$734	$8,073	$14
8.4	Steam Piping	$5,012	$0	$3,526	$0	$8,537	8.6%	$733	0%	$0	25.0%	$2,318	$11,589	$20
8.9	TG Foundations	$0	$998	$1,686	$0	$2,684	9.5%	$254	0%	$0	30.0%	$882	$3,820	$7
	SUBTOTAL 8.	**$39,409**	**$998**	**$12,154**	**$0**	**$52,561**		**$4,953**		**$0**		**$7,730**	**$65,244**	**$113**
9	COOLING WATER SYSTEM													
9.1	Cooling Towers	$6,929	$0	$1,260	$0	$8,189	9.5%	$780	0%	$0	15.0%	$1,345	$10,315	$18
9.2	Circulating Water Pumps	$1,800	$0	$130	$0	$1,931	8.4%	$163	0%	$0	15.0%	$314	$2,408	$4
9.3	Circ. Water System Auxiliaries	$151	$0	$22	$0	$173	9.5%	$16	0%	$0	15.0%	$28	$218	$0
9.4	Circ. Water Piping	$0	$6,320	$1,639	$0	$7,959	9.0%	$719	0%	$0	20.0%	$1,736	$10,414	$18
9.5	Make-up Water System	$367	$0	$525	$0	$892	9.6%	$86	0%	$0	20.0%	$195	$1,173	$2
9.6	Component Cooling Water System	$746	$892	$635	$0	$2,273	9.4%	$213	0%	$0	20.0%	$497	$2,984	$5
9.9	Circ. Water System Foundations	$0	$2,320	$3,944	$0	$6,264	9.5%	$594	0%	$0	30.0%	$2,057	$8,915	$15
	SUBTOTAL 9.	**$9,994**	**$9,533**	**$8,154**	**$0**	**$27,681**		**$2,571**		**$0**		**$6,174**	**$36,426**	**$63**

Exhibit 4-142 Case 2 D2C (60%) Capital Costs (continued)

Department:	NETL Office of Systems Analysis and Planning			**Cost Base:**	Jun 2007
Project:	CO2 Capture Sensitivity Systems Analysis			**Prepared:**	14-Jun-10
Case:	Case 2 D2C - GEE IGCC w/ one WGS bypass (60% CO2 Capture)				**x $1, 000**
Plant Size:	578.38 MW, net	Capital Charge Factor 0.1773	Capacity Factor 0.8		

Acct No.	Item/Description	Equipment Cost	Material Cost	Labor Direct	Labor Indirect	Bare Erected	Eng'g CM H.O. & %	Eng'g CM H.O. & Total	Process Cont. %	Process Cont. Total	Project Cont. %	Project Cont. Total	TOTAL PLANT COST $	TOTAL PLANT COST $/kW
10	ASH/SPENT SORBENT HANDLING SYS													
10.1	Slag Dewatering & Cooling	$11,967	$6,599	$13,406	$0	$31,972	9.7%	$3,086	0%	$0	10.0%	$3,506	$38,564	$67
10.2	Gasifier Ash Depressurization	w/10.1	w/10.1	w/10.1	$0	$0	0.0%	$0	0%	$0	0.0%	$0	$0	$0
10.3	Cleanup Ash Depressurization	w/10.1	w/10.1	w/10.1	$0	$0	0.0%	$0	0%	$0	0.0%	$0	$0	$0
10.4	High Temperature Ash Piping	$0	$0	$0	$0	$0	0.0%	$0	0%	$0	0.0%	$0	$0	$0
10.5	Other Ash Recovery Equipment	$0	$0	$0	$0	$0	0.0%	$0	0%	$0	0.0%	$0	$0	$0
10.6	Ash Storage Silos	$581	$0	$632	$0	$1,214	9.7%	$118	0%	$0	15.0%	$200	$1,531	$3
10.7	Ash Transport & Feed Equipment	$780	$0	$188	$0	$968	9.3%	$90	0%	$0	15.0%	$159	$1,217	$2
10.8	Misc. Ash Handling Equipment	$1,204	$1,475	$441	$0	$3,120	9.5%	$297	0%	$0	15.0%	$513	$3,930	$7
10.9	Ash/Spent Sorbent Foundation	$0	$51	$65	$0	$116	9.4%	$11	0%	$0	30.0%	$38	$165	$0
	SUBTOTAL 10.	**$14,532**	**$8,126**	**$14,732**	**$0**	**$37,390**		**$3,602**		**$0**		**$4,415**	**$45,406**	**$79**
11	ACCESSORY ELECTRIC PLANT													
11.1	Generator Equipment	$957	$0	$946	$0	$1,903	9.5%	$182	0%	$0	10.0%	$208	$2,293	$4
11.2	Station Service Equipment	$4,433	$0	$399	$0	$4,832	9.2%	$445	0%	$0	10.0%	$528	$5,805	$10
11.3	Switchgear & Motor Control	$8,195	$0	$1,490	$0	$9,685	9.3%	$898	0%	$0	15.0%	$1,588	$12,171	$21
11.4	Conduit & Cable Tray	$0	$3,807	$12,559	$0	$16,365	9.7%	$1,583	0%	$0	25.0%	$4,487	$22,435	$39
11.5	Wire & Cable	$0	$7,274	$4,779	$0	$12,053	7.3%	$876	0%	$0	25.0%	$3,232	$16,160	$28
11.6	Protective Equipment	$0	$686	$2,496	$0	$3,182	9.8%	$311	0%	$0	15.0%	$524	$4,016	$7
11.7	Standby Equipment	$235	$0	$230	$0	$465	9.5%	$44	0%	$0	15.0%	$76	$586	$1
11.8	Main Power Transformers	$17,694	$0	$146	$0	$17,840	7.6%	$1,349	0%	$0	15.0%	$2,878	$22,067	$38
11.9	Electrical Foundations	$0	$158	$415	$0	$573	9.6%	$55	0%	$0	30.0%	$188	$817	$1
	SUBTOTAL 11.	**$31,514**	**$11,925**	**$23,460**	**$0**	**$66,899**		**$5,743**		**$0**		**$13,710**	**$86,352**	**$149**
12	INSTRUMENTATION & CONTROL													
12.1	IGCC Control Equipment	w/4.1	$0	w/4.1	$0	$0	0.0%	$0	0%	$0	0.0%	$0	$0	$0
12.2	Combustion Turbine Control	w/6.1	$0	w/6.1	$0	$0	0.0%	$0	0%	$0	0.0%	$0	$0	$0
12.3	Steam Turbine Control	w/8.1	$0	w/8.1	$0	$0	0.0%	$0	0%	$0	0.0%	$0	$0	$0
12.4	Other Major Component Control	$1,087	$0	$726	$0	$1,813	9.5%	$172	5%	$91	15.0%	$311	$2,387	$4
12.5	Signal Processing Equipment	w/12.7	$0	w/12.7	$0	$0	0.0%	$0	0%	$0	0.0%	$0	$0	$0
12.6	Control Boards,Panels & Racks	$250	$0	$160	$0	$410	9.5%	$39	5%	$21	20.0%	$94	$563	$1
12.7	Computer & Accessories	$5,799	$0	$186	$0	$5,985	9.2%	$549	5%	$299	10.0%	$683	$7,517	$13
12.8	Instrument Wiring & Tubing	$0	$2,026	$4,142	$0	$6,167	8.5%	$523	5%	$308	25.0%	$1,750	$8,749	$15
12.9	Other I & C Equipment	$3,877	$0	$1,882	$0	$5,759	9.4%	$542	5%	$288	15.0%	$988	$7,577	$13
	SUBTOTAL 12.	**$11,013**	**$2,026**	**$7,096**	**$0**	**$20,135**		**$1,825**		**$1,007**		**$3,827**	**$26,793**	**$46**
13	IMPROVEMENTS TO SITE													
13.1	Site Preparation	0	109	2,321	0	2,430	9.9%	241	0%	0	30.0%	801	3,472	6
13.2	Site Improvements	0	1,932	2,567	0	4,498	9.9%	444	0%	0	30.0%	1,483	6,425	11
13.3	Site Facilities	3,461	0	3,652	0	7,114	9.9%	701	0%	0	30.0%	2,344	10,159	18
	SUBTOTAL 13.	**$3,461**	**$2,040**	**$8,540**	**$0**	**$14,042**		**$1,386**		**$0**		**$4,628**	**$20,056**	**$35**

Exhibit 4-142 Case 2 D2C (60%) Capital Costs (continued)

Department:	NETL Office of Systems Analysis and Planning			**Cost Base:**	Jun 2007
Project:	CO2 Capture Sensitivity Systems Analysis			**Prepared:**	27-May-11
Case:	Case 2 D2C - GEE IGCC w/ one WGS bypass (60% CO2 Capture)				**x $1, 000**
Plant Size:	578.38 MW, net	Capital Charge Factor 0.1773	Capacity Factor 0.8		

Acct No.	Item/Description	Equipment Cost	Material Cost	Labor Direct	Labor Indirect	Bare Erected	Eng'g CM H.O. & %	Eng'g CM H.O. & Total	Process Cont. %	Process Cont. Total	Project Cont. %	Project Cont. Total	TOTAL PLANT COST $	TOTAL PLANT COST $/kW
14	BUILDINGS & STRUCTURES													
14.1	Combustion Turbine Area	$0	$264	$149	$0	$414	8.8%	$36	0%	$0	20.0%	$90	$540	$1
14.2	Steam Turbine Building	$0	$2,371	$3,377	$0	$5,748	9.2%	$529	0%	$0	15.0%	$941	$7,218	$12
14.3	Administration Building	$0	$879	$638	$0	$1,517	8.9%	$135	0%	$0	15.0%	$248	$1,900	$3
14.4	Circulation Water Pumphouse	$0	$161	$86	$0	$247	8.8%	$22	0%	$0	15.0%	$40	$309	$1
14.5	Water Treatment Buildings	$0	$564	$550	$0	$1,114	9.0%	$101	0%	$0	15.0%	$182	$1,397	$2
14.6	Machine Shop	$0	$450	$308	$0	$758	8.9%	$67	0%	$0	15.0%	$124	$949	$2
14.7	Warehouse	$0	$726	$469	$0	$1,195	8.9%	$106	0%	$0	15.0%	$195	$1,496	$3
14.8	Other Buildings & Structures	$0	$435	$339	$0	$774	8.9%	$69	0%	$0	20.0%	$169	$1,012	$2
14.9	Waste Treating Building & Str.	$0	$970	$1,853	$0	$2,823	9.3%	$263	0%	$0	20.0%	$617	$3,703	$6
	SUBTOTAL 14.	**$0**	**$6,820**	**$7,769**	**$0**	**$14,589**		**$1,328**		**$0**		**$2,607**	**$18,524**	**$32**
	Total Cost	**$700,906**	**$74,923**	**$291,263**	**$0**	**$1,067,091**		**$100,392**		**$60,448**		**$191,841**	**$1,419,771**	**$2,455**

Owner's Costs			
Preproduction Costs			
6 Months All Labor		$13,169	$23
1 Month Maintenance Materials		$2,898	$5
1 Month Non-fuel Consumables		$341	$1
1 Month Waste Disposal		$311	$1
25% of 1 Months Fuel Cost at 100% CF		$1,659	$3
2% of TPC		$28,395	$49
Total		$46,772	$81
Inventory Capital			
60 day supply of fuel and consumables at 100% CF		$13,954	$24
0.5% of TPC (spare parts)		$7,099	$12
Total		$21,053	$36
Initial Cost for Catalyst and Chemicals		$6,510	$11
Land		$900	$2
Other Owner's Costs		$212,966	$368
Financing Costs		$38,334	$66
Total Overnight Costs (TOC)		**$1,746,306**	**$3,019**
TASC Multiplier	(IOU, high risk, 35 year)	1.140	
Total As-Spent Cost (TASC)		**$1,990,789**	**$3,442**

Exhibit 4-143 Case 2 D2C Initial and Annual O&M Expenses

INITIAL & ANNUAL O&M EXPENSES			
Case:	Case 2 D2C - GEE IGCC w/ one WGS bypass (60% CO2 Capture)		
Plant Size (MWe):	578.38	**Heat Rate (Btu/kWh):**	9,604
Primary/Secondary Fuel:	Illinois #6 Bituminous Coal	**Fuel Cost ($/MM Btu):**	1.64
Design/Construction	5 years	**Book Life (yrs):**	30
TPC (Plant Cost) Year:	Jun 2007	**TPI Year:**	2015
Capacity Factor (%):	80	**CO_2 Captured (TPD):**	7,820

OPERATING & MAINTENANCE LABOR

Operating Labor

Operating Labor Rate (base):	$34.65	$/hour
Operating Labor Burden:	30.00	% of base
Labor Overhead Charge:	25.00	% of labor

Operating Labor Requirements per Shift:	units/mod.	Total Plant
Skilled Operator	2.0	2.0
Operator	10.0	10.0
Foreman	1.0	1.0
Lab Tech's etc.	3.0	3.0
TOTAL Operating Jobs	16.0	16.0

	Annual Costs $	Annual Costs $/kW-net
Annual Operating Labor Cost (calc'd)	$6,313,507	$10.916
Maintenance Labor Cost (calc'd)	$14,756,256	$25.513
Administrative & Support Labor (calc'd)	$5,267,441	$9.107
Property Taxes & Insurance	$28,395,426	$49.095
TOTAL FIXED OPERATING COSTS	**$54,732,630**	**$94.631**

VARIABLE OPERATING COSTS

	$	$/kWh-net
Maintenance Material Costs (calc'd)	**$27,817,573**	**0.00686**

Consumables	Consumption Initial	Consumption /Day	Unit Cost	Initial Cost	$	$/kWh-net
Water (/1000 gallons)	0	3,816	1.08	$0	$1,205,281	0.00030
Chemicals						
MU & WT Chem. (lbs)	0	22,735	0.17	$0	$1,148,914	0.00028
Carbon (Mercury Removal) (lb)	68,570	117	1.05	$72,010	$35,878	0.00001
COS Catalyst (m3)	466	0.32	2,397.36	$1,115,971	$223,194	0.00006
Water Gas Shift Catalyst (ft3)	2,769	1.90	498.83	$1,381,263	$276,253	0.00007
Selexol Solution (gal)	294,129	78	13.40	$3,940,815	$306,332	0.00008
SCR Catalyst (m3)	0	0	0.00	$0	$0	0.00000
Ammonia (19% NH3) (ton)	0	0	0.00	$0	$0	0.00000
Claus Catalyst (ft3)	0	1.97	131.27	$0	$75,548	0.00002
Subtotal Chemicals				**$6,510,059**	**$2,066,119**	**0.00051**
Other						
Supplemental Fuel (MMBtu)	0	0	0.00	$0	$0	0.00000
Gases, N2 etc. (/100scf)	0	0	0.00	$0	$0	0.00000
L.P. Steam (/1000 pounds)	0	0	0.00	$0	$0	0.00000
Subtotal Other				**$0**	**$0**	**0.00000**
Waste Disposal						
Spent Mercury Sorbent (lb)	0	117	0.42	$0	$14,349	0.00000
Flyash (ton)	0	0	0.00	$0	$0	0.00000
Slag (ton)	0	627	16.23	$0	$2,969,994	0.00073
Subtotal Solid Waste Disposal				**$0**	**$2,984,343**	**$0**
By-products & Emissions						
Sulfur (tons)	0	143	0.00	$0	$0	0.00000
Subtotal By-Products				**$0**	**$0**	**$0**
TOTAL VARIABLE OPERATING COSTS					**$34,073,315**	**0.00841**
Coal FUEL (tons)	**0**	**5,714**	**38.19**	**$0**	**$63,706,962**	**0.01572**

Exhibit 4-144 Case 2 D2D (75%) Capital Costs

Department:	NETL Office of Systems Analysis and Planning	**Cost Base:**	Jun 2007
Project:	CO2 Capture Sensitivity Systems Analysis	**Prepared:**	14-Jun-10
Case:	Case 2 D2D - GEE IGCC w/ one WGS bypass (75% CO2 Capture)		**x $1, 000**
Plant Size:	563.92 MW, net Capital Charge Factor 0.1773 Capacity Factor 0.8		

Acct No.	Item/Description	Equipment Cost	Material Cost	Labor Direct	Labor Indirect	Bare Erected	Eng'g CM H.O. & %	Eng'g CM H.O. & Total	Process Cont. %	Process Cont. Total	Project Cont. %	Project Cont. Total	TOTAL PLANT COST $	TOTAL PLANT COST $/kW
1	COAL HANDLING SYSTEM													
1.1	Coal Receive & Unload	$3,723	$0	$1,819	$0	$5,542	9.0%	$496	0%	$0	20.0%	$1,208	$7,246	$13
1.2	Coal Stackout & Reclaim	$4,811	$0	$1,166	$0	$5,977	8.8%	$524	0%	$0	20.0%	$1,300	$7,801	$14
1.3	Coal Conveyors & Yd Crus	$4,473	$0	$1,154	$0	$5,627	8.8%	$494	0%	$0	20.0%	$1,224	$7,345	$13
1.4	Other Coal Handling	$1,170	$0	$267	$0	$1,437	8.8%	$126	0%	$0	20.0%	$313	$1,876	$3
1.5	Sorbent Receive & Unload	$0	$0	$0	$0	$0	0.0%	$0	0%	$0	0.0%	$0	$0	$0
1.6	Sorbent Stackout & Reclaim	$0	$0	$0	$0	$0	0.0%	$0	0%	$0	0.0%	$0	$0	$0
1.7	Sorbent Conveyors	$0	$0	$0	$0	$0	0.0%	$0	0%	$0	0.0%	$0	$0	$0
1.8	Other Sorbent Handling	$0	$0	$0	$0	$0	0.0%	$0	0%	$0	0.0%	$0	$0	$0
1.9	Coal & Sorbent Hnd.Foundations	$0	$2,634	$6,587	$0	$9,222	9.6%	$884	0%	$0	20.0%	$2,021	$12,127	$22
	SUBTOTAL 1.	**$14,177**	**$2,634**	**$10,994**	**$0**	**$27,805**		**$2,524**		**$0**		**$6,066**	**$36,395**	**$65**
2	COAL PREP & FEED SYSTEMS													
2.1	Coal Crushing & Drying	w/2.3	$0	w2.3	$0	$0	0.0%	0	0%	0	0.0%	$0	$0	$0
2.2	Prepared Coal Storage & Feed	$1,589	$380	$249	$0	$2,219	8.6%	190	0%	0	20.0%	$482	$2,890	$5
2.3	Slurry Prep & Feed	$21,737	$0	$9,592	$0	$31,330	9.1%	2,846	5%	1,566	20.0%	$7,149	$42,891	$76
2.4	Misc. Coal Prep & Feed	$874	$636	$1,907	$0	$3,417	9.2%	314	0%	0	20.0%	$746	$4,477	$8
2.5	Sorbent Prep Equipment	$0	$0	$0	$0	$0	0.0%	0	0%	0	15.0%	$0	$0	$0
2.6	Sorbent Storage & Feed	$0	$0	$0	$0	$0	0.0%	0	0%	0	15.0%	$0	$0	$0
2.7	Sorbent Injection System	$0	$0	$0	$0	$0	0.0%	0	0%	0	0.0%	$0	$0	$0
2.8	Booster Air Supply System	$0	$0	$0	$0	$0	0.0%	0	0%	0	0.0%	$0	$0	$0
2.9	Coal & Sorbent Feed Foundation	$0	$3,397	$2,789	$0	$6,186	9.3%	573	0%	0	20.0%	$1,352	$8,111	$14
	SUBTOTAL 2.	**$24,200**	**$4,414**	**$14,538**	**$0**	**$43,152**		**$3,923**		**$1,566**		**$9,728**	**$58,370**	**$104**
3	FEEDWATER & MISC. BOP SYSTEMS													
3.1	Feedwater System	2,818	4,839	2,555	0	10,212	9.3%	946	0%	0	20.0%	$2,232	$13,389	$24
3.2	Water Makeup & Pretreating	692	72	387	0	1,151	9.5%	110	0%	0	30.0%	$378	$1,639	$3
3.3	Other Feedwater Subsystems	1,542	521	469	0	2,532	9.0%	228	0%	0	20.0%	$552	$3,311	$6
3.4	Service Water Systems	396	816	2,831	0	4,042	9.8%	394	0%	0	30.0%	$1,331	$5,768	$10
3.5	Other Boiler Plant Systems	2,125	824	2,041	0	4,990	9.5%	473	0%	0	20.0%	$1,093	$6,556	$12
3.6	FO Supply Sys & Nat Gas	$315	$594	$554	$0	1,463	9.6%	141	0%	0	20.0%	$321	$1,924	$3
3.7	Waste Treatment Equipment	968	0	590	0	1,558	9.7%	152	0%	0	30.0%	$513	$2,222	$4
3.8	Misc. Power Plant Equipment	$1,118	$150	$574	$0	1,842	9.7%	178	0%	0	30.0%	$606	$2,626	$5
	SUBTOTAL 3.	**$9,974**	**$7,815**	**$10,000**	**$0**	**$27,789**		**$2,621**		**$0**		**$7,025**	**$37,436**	**$66**
4	GASIFIER & ACCESSORIES													
4.1	Syngas Cooler Gasifier System	$112,933	$0	$61,879	$0	$174,812	9.2%	$16,014	13.9%	$24,260	15.3%	$32,980	$248,067	$440
4.2	Syngas Cooler (w/ Gasifier - $)	w/4.1	$0	w/ 4.1	$0	$0	0.0%	$0	0%	$0	0.0%	$0	$0	$0
4.3	ASU/Oxidant Compression	$191,409	$0	w/equip.	$0	$191,409	9.7%	$18,553	0%	$0	10.0%	$20,996	$230,959	$410
4.4	Scrubber & Low Temperature Cooling	6,000	$4,883	$5,083	$0	$15,966	9.6%	$1,533	0%	$0	20.0%	$3,500	$20,999	$37
4.5	Black Water & Sour Gas Section	w/4.1	$0	w/4.1	$0	$0	0.0%	$0	0%	$0	0.0%	$0	$0	$0
4.6	Soot Recovery & SARU	$1,830	$869	$1,717	$0	$4,416	9.6%	$426	0%	$0	20.0%	$968	$5,810	$10
4.7	Major Component Rigging	w/4.1	$0	w/4.1	$0	$0	0.0%	$0	0%	$0	0.0%	$0	$0	$0
4.8	Gasification Foundations	$0	$6,433	$5,370	$0	$11,803	9.3%	$1,094	0%	$0	25.0%	$3,224	$16,120	$29
	SUBTOTAL 4.	**$312,172**	**$12,185**	**$74,049**	**$0**	**$398,406**		**$37,620**		**$24,260**		**$61,669**	**$521,955**	**$926**

Exhibit 4-144 Case 2 D2D (75%) Capital Costs (continued)

Department:	NETL Office of Systems Analysis and Planning			**Cost Base:**	Jun 2007
Project:	CO2 Capture Sensitivity Systems Analysis			**Prepared:**	14-Jun-10
Case:	Case 2 D2D - GEE IGCC w/ one WGS bypass (75% CO2 Capture)				**x $1, 000**
Plant Size:	563.92 MW, net	Capital Charge Factor 0.1773	Capacity Factor 0.8		

Acct No.	Item/Description	Equipment Cost	Material Cost	Labor Direct	Labor Indirect	Bare Erected	Eng'g CM H.O. & %	Eng'g CM H.O. & Total	Process Cont. %	Process Cont. Total	Project Cont. %	Project Cont. Total	TOTAL PLANT COST $	TOTAL PLANT COST $/kW
5A	GAS CLEANUP & PIPING							*						
5A.1	Double Stage Selexol	$69,188	$0	$58,708	$0	$127,896	9.7%	$12,369	20%	$25,579	20.0%	$33,169	$199,013	$353
5A.2	Elemental Sulfur Plant	$10,254	$2,044	$13,230	$0	$25,527	9.7%	$2,480	0%	$0	20.0%	$5,601	$33,608	$60
5A.3	Mercury Removal	$1,307	$0	$994	$0	$2,301	9.7%	$222	5%	$115	20.0%	$528	$3,166	$6
5A.4	Shift Reactors	$5,634	$0	$2,268	$0	$7,902	9.6%	$758	0%	$0	20.0%	$1,732	$10,391	$18
5A.5	COS Hydrolysis	$3,942	$0	$5,148	$0	$9,090	9.7%	$884	0%	$0	20.0%	$1,995	$11,968	$21
5A.6	Particulate Removal	$0	$0	$0	$0	$0	0.0%	$0	0%	$0	10.0%	$0	$0	$0
5A.7	Blowback Gas Systems	$1,338	$0	$254	$0	$1,592	12.2%	$194	0%	$0	20.0%	$357	$2,143	$4
5A.8	Fuel Gas Piping	$0	$628	$440	$0	$1,068	9.3%	$99	0%	$0	20.0%	$233	$1,400	$2
5A.9	HGCU Foundations	$0	$636	$410	$0	$1,047	9.2%	$96	0%	$0	30.0%	$343	$1,486	$3
5A.10	Open	$0	$0	$0	$0	$0	0.0%	$0	0%	$0	0.0%	$0	$0	$0
	SUBTOTAL 5A.	**$91,663**	**$3,308**	**$81,451**	**$0**	**$176,422**		**$17,102**		**$25,694**		**$43,958**	**$263,176**	**$467**
5B	CO2 REMOVAL & COMPRESSION													
5B.1	CO2 Removal System	$0	$0	$0	$0	$0	9.6%	$0	0%	$0	20.0%	$0	$0	$0
5B.2	CO2 Compression & Drying	$15,358	$0	$9,414	$0	$24,773	9.6%	$2,386	0%	$0	20.0%	$5,432	$32,591	$58
5B.3	CO2 Pipeline											0	0	0
5B.4	CO2 Storage											0	0	0
5B.5	CO2 Monitoring											0	0	0
	SUBTOTAL 5B.	**$15,358**	**$0**	**$9,414**	**$0**	**$24,773**		**$2,386**		**$0**		**$5,432**	**$32,591**	**$58**
6	COMBUSTION TURBINE/ACCESSORIES													
6.1	Combustion Turbine Generator	$92,026	$0	$6,583	$0	$98,609	9.5%	9,348	10%	9,861	10.0%	11,782	129,600	230
6.2	Syngas Expander	$5,550	$0	$767	$0	$6,316	9.5%	600	0%	0	15.0%	1,038	7,954	14
6.3	Compressed Air Piping	$0	$0	$0	$0	$0	0.0%	0	0%	0	0.0%	0	0	0
6.4	Combustion Turbine Foundations	$0	$887	$982	$0	$1,868	9.4%	175	0%	0	30.0%	613	2,656	5
	SUBTOTAL 6.	**$97,576**	**$887**	**$8,331**	**$0**	**$106,794**		**$10,123**		**$9,861**		**$13,432**	**$140,210**	**$249**
7	HRSG, DUCTING & STACK													
7.1	Heat Recovery Steam Generator	$33,897	$0	$4,820	$0	$38,717	9.5%	$3,681	0%	$0	10.0%	$4,240	$46,638	$83
7.2	Open	$0	$0	$0	$0	$0	0.0%	$0	0%	$0	0.0%	$0	$0	$0
7.3	Ductwork	$0	$1,726	$1,231	$0	$2,957	8.8%	$259	0%	$0	20.0%	$643	$3,860	$7
7.4	Stack	$3,367	$0	$1,265	$0	$4,632	9.6%	$444	0%	$0	10.0%	$508	$5,584	$10
7.9	HRSG, Duct & Stack Foundations	$0	$675	$648	$0	$1,323	9.3%	$123	0%	$0	30.0%	$434	$1,879	$3
	SUBTOTAL 7.	**$37,264**	**$2,401**	**$7,964**	**$0**	**$47,629**		**$4,507**		**$0**		**$5,824**	**$57,961**	**$103**
8	STEAM TURBINE GENERATOR													
8.1	Steam TG & Accessories	$28,760	$0	$4,917	$0	$33,676	9.6%	$3,231	0%	$0	10.0%	$3,691	$40,598	$72
8.2	Turbine Plant Auxiliaries	$199	$0	$457	$0	$656	9.8%	$64	0%	$0	10.0%	$72	$793	$1
8.3	Condenser & Auxiliaries	$5,106	$0	$1,499	$0	$6,605	9.6%	$631	0%	$0	10.0%	$724	$7,960	$14
8.4	Steam Piping	$4,975	$0	$3,499	$0	$8,474	8.6%	$728	0%	$0	25.0%	$2,300	$11,502	$20
8.9	TG Foundations	$0	$989	$1,672	$0	$2,661	9.5%	$252	0%	$0	30.0%	$874	$3,787	$7
	SUBTOTAL 8.	**$39,040**	**$989**	**$12,044**	**$0**	**$52,073**		**$4,907**		**$0**		**$7,661**	**$64,641**	**$115**
9	COOLING WATER SYSTEM													
9.1	Cooling Towers	$7,032	$0	$1,279	$0	$8,312	9.5%	$791	0%	$0	15.0%	$1,365	$10,469	$19
9.2	Circulating Water Pumps	$1,823	$0	$132	$0	$1,954	8.4%	$165	0%	$0	15.0%	$318	$2,437	$4
9.3	Circ. Water System Auxiliaries	$153	$0	$22	$0	$175	9.5%	$17	0%	$0	15.0%	$29	$220	$0
9.4	Circ. Water Piping	$0	$6,385	$1,655	$0	$8,040	9.0%	$727	0%	$0	20.0%	$1,753	$10,520	$19
9.5	Make-up Water System	$376	$0	$538	$0	$915	9.6%	$88	0%	$0	20.0%	$200	$1,203	$2
9.6	Component Cooling Water System	$754	$902	$641	$0	$2,297	9.4%	$215	0%	$0	20.0%	$502	$3,014	$5
9.9	Circ. Water System Foundations	$0	$2,344	$3,984	$0	$6,328	9.5%	$600	0%	$0	30.0%	$2,078	$9,006	$16
	SUBTOTAL 9.	**$10,138**	**$9,630**	**$8,252**	**$0**	**$28,020**		**$2,603**		**$0**		**$6,247**	**$36,870**	**$65**

Exhibit 4-144 Case 2 D2D (75%) Capital Costs (continued)

Department:	NETL Office of Systems Analysis and Planning			**Cost Base:**	Jun 2007
Project:	CO2 Capture Sensitivity Systems Analysis			**Prepared:**	14-Jun-10
Case:	Case 2 D2D - GEE IGCC w/ one WGS bypass (75% CO2 Capture)				**x $1, 000**
Plant Size:	563.92 MW, net	Capital Charge Factor 0.1773	Capacity Factor 0.8		

Acct No.	Item/Description	Equipment Cost	Material Cost	Labor Direct	Labor Indirect	Bare Erected	Eng'g CM H.O. & %	Eng'g CM H.O. & Total	Process Cont. %	Process Cont. Total	Project Cont. %	Project Cont. Total	TOTAL PLANT COST $	TOTAL PLANT COST $/kW
10	ASH/SPENT SORBENT HANDLING SYS													
10.1	Slag Dewatering & Cooling	$12,049	$6,644	$13,497	$0	$32,189	9.7%	$3,107	0%	$0	10.0%	$3,530	$38,826	$69
10.2	Gasifier Ash Depressurization	w/10.1	w/10.1	w/10.1	$0	$0	0.0%	$0	0%	$0	0.0%	$0	$0	$0
10.3	Cleanup Ash Depressurization	w/10.1	w/10.1	w/10.1	$0	$0	0.0%	$0	0%	$0	0.0%	$0	$0	$0
10.4	High Temperature Ash Piping	$0	$0	$0	$0	$0	0.0%	$0	0%	$0	0.0%	$0	$0	$0
10.5	Other Ash Recovery Equipment	$0	$0	$0	$0	$0	0.0%	$0	0%	$0	0.0%	$0	$0	$0
10.6	Ash Storage Silos	$585	$0	$636	$0	$1,221	9.7%	$118	0%	$0	15.0%	$201	$1,541	$3
10.7	Ash Transport & Feed Equipment	$784	$0	$189	$0	$974	9.3%	$91	0%	$0	15.0%	$160	$1,224	$2
10.8	Misc. Ash Handling Equipment	$1,211	$1,484	$443	$0	$3,139	9.5%	$299	0%	$0	15.0%	$516	$3,954	$7
10.9	Ash/Spent Sorbent Foundation	$0	$52	$65	$0	$117	9.4%	$11	0%	$0	30.0%	$38	$166	$0
	SUBTOTAL 10.	**$14,629**	**$8,180**	**$14,831**	**$0**	**$37,640**		**$3,626**		**$0**		**$4,444**	**$45,710**	**$81**
11	ACCESSORY ELECTRIC PLANT													
11.1	Generator Equipment	$954	$0	$944	$0	$1,898	9.5%	$181	0%	$0	10.0%	$208	$2,287	$4
11.2	Station Service Equipment	$4,560	$0	$411	$0	$4,971	9.2%	$458	0%	$0	10.0%	$543	$5,972	$11
11.3	Switchgear & Motor Control	$8,430	$0	$1,533	$0	$9,963	9.3%	$924	0%	$0	15.0%	$1,633	$12,520	$22
11.4	Conduit & Cable Tray	$0	$3,916	$12,918	$0	$16,834	9.7%	$1,628	0%	$0	25.0%	$4,616	$23,078	$41
11.5	Wire & Cable	$0	$7,482	$4,916	$0	$12,398	7.3%	$901	0%	$0	25.0%	$3,325	$16,623	$29
11.6	Protective Equipment	$0	$686	$2,496	$0	$3,182	9.8%	$311	0%	$0	15.0%	$524	$4,016	$7
11.7	Standby Equipment	$235	$0	$229	$0	$464	9.5%	$44	0%	$0	15.0%	$76	$585	$1
11.8	Main Power Transformers	$17,638	$0	$145	$0	$17,783	7.6%	$1,345	0%	$0	15.0%	$2,869	$21,997	$39
11.9	Electrical Foundations	$0	$158	$414	$0	$571	9.6%	$55	0%	$0	30.0%	$188	$814	$1
	SUBTOTAL 11.	**$31,816**	**$12,241**	**$24,006**	**$0**	**$68,063**		**$5,847**		**$0**		**$13,981**	**$87,892**	**$156**
12	INSTRUMENTATION & CONTROL													
12.1	IGCC Control Equipment	w/4.1	$0	w/4.1	$0	$0	0.0%	$0	0%	$0	0.0%	$0	$0	$0
12.2	Combustion Turbine Control	w/6.1	$0	w/6.1	$0	$0	0.0%	$0	0%	$0	0.0%	$0	$0	$0
12.3	Steam Turbine Control	w/8.1	$0	w/8.1	$0	$0	0.0%	$0	0%	$0	0.0%	$0	$0	$0
12.4	Other Major Component Control	$1,106	$0	$738	$0	$1,844	9.5%	$175	5%	$92	15.0%	$317	$2,428	$4
12.5	Signal Processing Equipment	w/12.7	$0	w/12.7	$0	$0	0.0%	$0	0%	$0	0.0%	$0	$0	$0
12.6	Control Boards,Panels & Racks	$254	$0	$163	$0	$417	9.5%	$39	5%	$21	20.0%	$95	$573	$1
12.7	Computer & Accessories	$5,899	$0	$189	$0	$6,087	9.2%	$559	5%	$304	10.0%	$695	$7,646	$14
12.8	Instrument Wiring & Tubing	$0	$2,061	$4,212	$0	$6,273	8.5%	$532	5%	$314	25.0%	$1,780	$8,898	$16
12.9	Other I & C Equipment	$3,943	$0	$1,915	$0	$5,858	9.4%	$551	5%	$293	15.0%	$1,005	$7,707	$14
	SUBTOTAL 12.	**$11,201**	**$2,061**	**$7,217**	**$0**	**$20,479**		**$1,856**		**$1,024**		**$3,892**	**$27,251**	**$48**
13	IMPROVEMENTS TO SITE													
13.1	Site Preparation	0	109	2,330	0	2,439	9.9%	242	0%	0	30.0%	804	3,486	6
13.2	Site Improvements	0	1,939	2,577	0	4,516	9.9%	445	0%	0	30.0%	1,488	6,450	11
13.3	Site Facilities	3,475	0	3,667	0	7,142	9.9%	704	0%	0	30.0%	2,354	10,199	18
	SUBTOTAL 13.	**$3,475**	**$2,048**	**$8,574**	**$0**	**$14,097**		**$1,391**		**$0**		**$4,647**	**$20,135**	**$36**

Exhibit 4-144 Case 2 D2D (75%) Capital Costs (continued)

Department:	NETL Office of Systems Analysis and Planning			**Cost Base:**	Jun 2007
Project:	CO2 Capture Sensitivity Systems Analysis			**Prepared:**	27-May-11
Case:	Case 2 D2D - GEE IGCC w/ one WGS bypass (75% CO2 Capture)				**x $1, 000**
Plant Size:	563.92 MW, net	Capital Charge Factor 0.1773	Capacity Factor 0.8		

Acct No.	Item/Description	Equipment Cost	Material Cost	Labor Direct	Labor Indirect	Bare Erected	Eng'g CM H.O. & %	Eng'g CM H.O. & Total	Process Cont. %	Process Cont. Total	Project Cont. %	Project Cont. Total	TOTAL PLANT COST $	TOTAL PLANT COST $/kW
14	BUILDINGS & STRUCTURES													
14.1	Combustion Turbine Area	$0	$264	$150	$0	$414	8.8%	$36	0%	$0	20.0%	$90	$540	$1
14.2	Steam Turbine Building	$0	$2,374	$3,382	$0	$5,757	9.2%	$530	0%	$0	15.0%	$943	$7,229	$13
14.3	Administration Building	$0	$881	$639	$0	$1,520	8.9%	$135	0%	$0	15.0%	$248	$1,903	$3
14.4	Circulation Water Pumphouse	$0	$163	$86	$0	$249	8.8%	$22	0%	$0	15.0%	$41	$312	$1
14.5	Water Treatment Buildings	$0	$580	$566	$0	$1,146	9.0%	$104	0%	$0	15.0%	$187	$1,437	$3
14.6	Machine Shop	$0	$451	$309	$0	$759	8.9%	$67	0%	$0	15.0%	$124	$951	$2
14.7	Warehouse	$0	$728	$470	$0	$1,198	8.9%	$106	0%	$0	15.0%	$196	$1,499	$3
14.8	Other Buildings & Structures	$0	$436	$339	$0	$775	8.9%	$69	0%	$0	20.0%	$169	$1,014	$2
14.9	Waste Treating Building & Str.	$0	$973	$1,859	$0	$2,831	9.3%	$264	0%	$0	20.0%	$619	$3,714	$7
	SUBTOTAL 14.	**$0**	**$6,850**	**$7,800**	**$0**	**$14,650**		**$1,334**		**$0**		**$2,617**	**$18,600**	**$33**
	Total Cost	**$712,683**	**$75,643**	**$299,466**	**$0**	**$1,087,792**		**$102,370**		**$62,406**		**$196,623**	**$1,449,191**	**$2,570**

Owner's Costs			
Preproduction Costs			
6 Months All Labor		$13,348	$24
1 Month Maintenance Materials		$2,954	$5
1 Month Non-fuel Consumables		$368	$1
1 Month Waste Disposal		$314	$1
25% of 1 Months Fuel Cost at 100% CF		$1,677	$3
2% of TPC		$28,984	$51
Total		$47,645	$84
Inventory Capital			
60 day supply of fuel and consumables at 100% CF		$14,154	$25
0.5% of TPC (spare parts)		$7,246	$13
Total		$21,400	$38
Initial Cost for Catalyst and Chemicals		$7,172	$13
Land		$900	$2
Other Owner's Costs		$217,379	$385
Financing Costs		$39,128	$69
Total Overnight Costs (TOC)		**$1,782,815**	**$3,161**
TASC Multiplier	(IOU, high risk, 35 year)	1.140	
Total As-Spent Cost (TASC)		**$2,032,409**	**$3,604**

Exhibit 4-145 Case 2 D2D Initial and Annual O&M Expenses

INITIAL & ANNUAL O&M EXPENSES						
Case:	Case 2 D2D - GEE IGCC w/ one WGS bypass (75% CO2 Capture)					
Plant Size (MWe):	563.92			**Heat Rate (Btu/kWh):**		9,958
Primary/Secondary Fuel:	Illinois #6 Bituminous Coal			**Fuel Cost ($/MM Btu):**		1.64
Design/Construction	5 years			**Book Life (yrs):**		30
TPC (Plant Cost) Year:	Jun 2007			**TPI Year:**		2015
Capacity Factor (%):	80			**CO_2 Captured (TPD):**		9,988
OPERATING & MAINTENANCE LABOR						
Operating Labor						
Operating Labor Rate (base):		$34.65	$/hour			
Operating Labor Burden:		30.00	% of base			
Labor Overhead Charge:		25.00	% of labor			
Operating Labor Requirements per Shift:		**units/mod.**		**Total Plant**		
Skilled Operator		2.0		2.0		
Operator		10.0		10.0		
Foreman		1.0		1.0		
Lab Tech's etc.		3.0		3.0		
TOTAL Operating Jobs		16.0		16.0		
					Annual Costs	
					$	**$/kW-net**
Annual Operating Labor Cost (calc'd)					$6,313,507	$11.196
Maintenance Labor Cost (calc'd)					$15,042,519	$26.675
Administrative & Support Labor (calc'd)					$5,339,006	$9.468
Property Taxes & Insurance					$28,983,817	$51.397
TOTAL FIXED OPERATING COSTS					**$55,678,849**	**$98.735**
VARIABLE OPERATING COSTS						
					$	**$/kWh-net**
Maintenance Material Costs (calc'd)					**$28,357,217**	**0.00718**
Consumables	**Consumption Initial**	**/Day**	**Unit Cost**	**Initial Cost**	**$**	**$/kWh-net**
Water (/1000 gallons)	0	3,982	1.08	$0	$1,257,585	0.00032
Chemicals						
MU & WT Chem. (lbs)	0	23,721	0.17	$0	$1,198,773	0.00030
Carbon (Mercury Removal) (lb)	74,096	127	1.05	$77,813	$38,945	0.00001
COS Catalyst (m3)	485	0.33	2,397.36	$1,163,199	$232,640	0.00006
Water Gas Shift Catalyst (ft3)	3,930	2.69	498.83	$1,960,406	$392,081	0.00010
Selexol Solution (gal)	296,322	87	13.40	$3,970,195	$339,078	0.00009
SCR Catalyst (m3)	0	0	0.00	$0	$0	0.00000
Ammonia (19% NH3) (ton)	0	0	0.00	$0	$0	0.00000
Claus Catalyst (ft3)	0	1.99	131.27	$0	$76,378	0.00002
Subtotal Chemicals				**$7,171,613**	**$2,277,894**	**0.00058**
Other						
Supplemental Fuel (MMBtu)	0	0	0.00	$0	$0	0.00000
Gases, N2 etc. (/100scf)	0	0	0.00	$0	$0	0.00000
L.P. Steam (/1000 pounds)	0	0	0.00	$0	$0	0.00000
Subtotal Other				**$0**	**$0**	**0.00000**
Waste Disposal						
Spent Mercury Sorbent (lb)	0	127	0.42	$0	$15,575	0.00000
Flyash (ton)	0	0	0.00	$0	$0	0.00000
Slag (ton)	0	634	16.23	$0	$3,002,571	0.00076
Subtotal Solid Waste Disposal				**$0**	**$3,018,146**	**$0**
By-products & Emissions						
Sulfur (tons)	0	145	0.00	$0	$0	0.00000
Subtotal By-Products				**$0**	**$0**	**$0**
TOTAL VARIABLE OPERATING COSTS					**$34,910,843**	**0.00883**
Coal FUEL (tons)	**0**	**5,776**	**38.19**	**$0**	**$64,405,670**	**0.01630**

Exhibit 4-146 Case 2 D3A (25%) Capital Costs

Department:	NETL Office of Systems Analysis and Planning	**Cost Base:**	Jun 2007
Project:	CO2 Capture Sensitivity Systems Analysis	**Prepared:**	14-Jun-10
Case:	Case 2 D3A - GEE IGCC w/ two WGS bypass (25% CO2 Capture)		**x $1, 000**
Plant Size:	607.02 MW, net	Capital Charge Factor 0.1773	Capacity Factor 0.8

Acct No.	Item/Description	Equipment Cost	Material Cost	Labor Direct	Labor Indirect	Bare Erected	Eng'g CM H.O. & %	Eng'g CM H.O. & Total	Process Cont. %	Process Cont. Total	Project Cont. %	Project Cont. Total	TOTAL PLANT COST $	TOTAL PLANT COST $/kW
1	COAL HANDLING SYSTEM													
1.1	Coal Receive & Unload	$3,633	$0	$1,775	$0	$5,409	9.0%	$484	0%	$0	20.0%	$1,179	$7,072	$12
1.2	Coal Stackout & Reclaim	$4,695	$0	$1,138	$0	$5,833	8.8%	$511	0%	$0	20.0%	$1,269	$7,613	$13
1.3	Coal Conveyors & Yd Crus	$4,365	$0	$1,126	$0	$5,491	8.8%	$482	0%	$0	20.0%	$1,195	$7,168	$12
1.4	Other Coal Handling	$1,142	$0	$261	$0	$1,403	8.8%	$123	0%	$0	20.0%	$305	$1,830	$3
1.5	Sorbent Receive & Unload	$0	$0	$0	$0	$0	0.0%	$0	0%	$0	0.0%	$0	$0	$0
1.6	Sorbent Stackout & Reclaim	$0	$0	$0	$0	$0	0.0%	$0	0%	$0	0.0%	$0	$0	$0
1.7	Sorbent Conveyors	$0	$0	$0	$0	$0	0.0%	$0	0%	$0	0.0%	$0	$0	$0
1.8	Other Sorbent Handling	$0	$0	$0	$0	$0	0.0%	$0	0%	$0	0.0%	$0	$0	$0
1.9	Coal & Sorbent Hnd.Foundations	$0	$2,571	$6,429	$0	$9,000	9.6%	$863	0%	$0	20.0%	$1,972	$11,835	$19
	SUBTOTAL 1.	**$13,835**	**$2,571**	**$10,729**	**$0**	**$27,135**		**$2,463**		**$0**		**$5,920**	**$35,518**	**$59**
2	COAL PREP & FEED SYSTEMS													
2.1	Coal Crushing & Drying	w/2.3	$0	w2.3	$0	$0	0.0%	0	0%	0	0.0%	$0	$0	$0
2.2	Prepared Coal Storage & Feed	$1,549	$371	$243	$0	$2,162	8.6%	185	0%	0	20.0%	$469	$2,816	$5
2.3	Slurry Prep & Feed	$21,172	$0	$9,347	$0	$30,518	9.1%	2,773	5%	1,526	20.0%	$6,963	$41,780	$69
2.4	Misc. Coal Prep & Feed	$852	$620	$1,858	$0	$3,329	9.2%	306	0%	0	20.0%	$727	$4,362	$7
2.5	Sorbent Prep Equipment	$0	$0	$0	$0	$0	0.0%	0	0%	0	15.0%	$0	$0	$0
2.6	Sorbent Storage & Feed	$0	$0	$0	$0	$0	0.0%	0	0%	0	15.0%	$0	$0	$0
2.7	Sorbent Injection System	$0	$0	$0	$0	$0	0.0%	0	0%	0	0.0%	$0	$0	$0
2.8	Booster Air Supply System	$0	$0	$0	$0	$0	0.0%	0	0%	0	0.0%	$0	$0	$0
2.9	Coal & Sorbent Feed Foundation	$0	$3,310	$2,718	$0	$6,028	9.3%	558	0%	0	20.0%	$1,317	$7,903	$13
	SUBTOTAL 2.	**$23,572**	**$4,300**	**$14,165**	**$0**	**$42,037**		**$3,822**		**$1,526**		**$9,477**	**$56,862**	**$94**
3	FEEDWATER & MISC. BOP SYSTEMS													
3.1	Feedwater System	2,864	4,919	2,597	0	10,380	9.3%	962	0%	0	20.0%	$2,268	$13,610	$22
3.2	Water Makeup & Pretreating	616	64	344	0	1,025	9.5%	98	0%	0	30.0%	$337	$1,459	$2
3.3	Other Feedwater Subsystems	1,567	530	477	0	2,573	9.0%	231	0%	0	20.0%	$561	$3,366	$6
3.4	Service Water Systems	353	726	2,520	0	3,599	9.8%	351	0%	0	30.0%	$1,185	$5,135	$8
3.5	Other Boiler Plant Systems	1,892	733	1,817	0	4,443	9.5%	421	0%	0	20.0%	$973	$5,837	$10
3.6	FO Supply Sys & Nat Gas	$311	$588	$549	$0	1,448	9.6%	140	0%	0	20.0%	$318	$1,905	$3
3.7	Waste Treatment Equipment	861	0	525	0	1,387	9.7%	135	0%	0	30.0%	$457	$1,978	$3
3.8	Misc. Power Plant Equipment	$1,107	$148	$569	$0	1,824	9.7%	176	0%	0	30.0%	$600	$2,600	$4
	SUBTOTAL 3.	**$9,573**	**$7,709**	**$9,397**	**$0**	**$26,679**		**$2,514**		**$0**		**$6,698**	**$35,891**	**$59**
4	GASIFIER & ACCESSORIES													
4.1	Syngas Cooler Gasifier System	$109,865	$0	$60,198	$0	$170,063	9.2%	$15,579	13.9%	$23,601	15.3%	$32,084	$241,328	$398
4.2	Syngas Cooler (w/ Gasifier - $)	w/4.1	$0	w/ 4.1	$0	$0	0.0%	$0	0%	$0	0.0%	$0	$0	$0
4.3	ASU/Oxidant Compression	$186,280	$0	w/equip.	$0	$186,280	9.7%	$18,056	0%	$0	10.0%	$20,434	$224,770	$370
4.4	Scrubber & Low Temperature Cooling	5,837	$4,751	$4,945	$0	$15,532	9.6%	$1,491	0%	$0	20.0%	$3,405	$20,429	$34
4.5	Black Water & Sour Gas Section	w/4.1	$0	w/4.1	$0	$0	0.0%	$0	0%	$0	0.0%	$0	$0	$0
4.6	Soot Recovery & SARU	$1,780	$845	$1,671	$0	$4,296	9.6%	$414	0%	$0	20.0%	$942	$5,652	$9
4.7	Major Component Rigging	w/4.1	$0	w/4.1	$0	$0	0.0%	$0	0%	$0	0.0%	$0	$0	$0
4.8	Gasification Foundations	$0	$6,258	$5,224	$0	$11,482	9.3%	$1,064	0%	$0	25.0%	$3,136	$15,682	$26
	SUBTOTAL 4.	**$303,762**	**$11,854**	**$72,037**	**$0**	**$387,653**		**$36,605**		**$23,601**		**$60,001**	**$507,860**	**$837**

Exhibit 4-146 Case 2 D3A (25%) Capital Costs (continued)

		Department:	NETL Office of Systems Analysis and Planning										**Cost Base:**	Jun 2007
		Project:	CO2 Capture Sensitivity Systems Analysis										**Prepared:**	14-Jun-10
		Case:	Case 2 D3A - GEE IGCC w/ two WGS bypass (25% CO2 Capture)											**x $1, 000**
		Plant Size:	607.02	MW, net		Capital Charge Factor	0.1773	Capacity Factor	0.8					
			Equipment	**Material**	**Labor**		**Bare**	**Eng'g CM H.O. &**		**Process Cont.**		**Project Cont.**		**TOTAL PLANT COST**	
Acct No.	**Item/Description**		**Cost**	**Cost**	**Direct**	**Indirect**	**Erected**	**%**	**Total**	**%**	**Total**	**%**	**Total**	**$**	**$/kW**
5A	GAS CLEANUP & PIPING								*						
5A.1	Double Stage Selexol		$53,837	$0	$45,682	$0	$99,519	9.7%	$9,625	20%	$19,904	20.0%	$25,809	$154,856	$255
5A.2	Elemental Sulfur Plant		$9,987	$1,990	$12,884	$0	$24,861	9.7%	$2,415	0%	$0	20.0%	$5,455	$32,732	$54
5A.3	Mercury Removal		$1,064	$0	$809	$0	$1,873	9.7%	$181	5%	$94	20.0%	$430	$2,577	$4
5A.4	Shift Reactors		$145	$0	$58	$0	$203	9.6%	$19	0%	$0	20.0%	$44	$267	$0
5A.5	COS Hydrolysis		$3,543	$0	$4,627	$0	$8,170	9.7%	$794	0%	$0	20.0%	$1,793	$10,758	$18
5A.6	Particulate Removal		$0	$0	$0	$0	$0	0.0%	$0	0%	$0	10.0%	$0	$0	$0
5A.7	Blowback Gas Systems		$1,302	$0	$247	$0	$1,549	12.2%	$189	0%	$0	20.0%	$348	$2,085	$3
5A.8	Fuel Gas Piping		$0	$598	$419	$0	$1,018	9.3%	$94	0%	$0	20.0%	$222	$1,334	$2
5A.9	HGCU Foundations		$0	$617	$398	$0	$1,015	9.2%	$93	0%	$0	30.0%	$332	$1,440	$2
5A.10	Open		$0	$0	$0	$0	$0	0.0%	$0	0%	$0	0.0%	$0	$0	$0
		SUBTOTAL 5A.	**$69,877**	**$3,206**	**$65,125**	**$0**	**$138,207**		**$13,411**		**$19,997**		**$34,434**	**$206,049**	**$339**
5B	CO2 REMOVAL & COMPRESSION														
5B.1	CO2 Removal System		$0	$0	$0	$0	$0	9.6%	$0	0%	$0	20.0%	$0	$0	$0
5B.2	CO2 Compression & Drying		$5,815	$0	$3,564	$0	$9,379	9.6%	$903	0%	$0	20.0%	$2,057	$12,339	$20
5B.3	CO2 Pipeline												0	0	0
5B.4	CO2 Storage												0	0	0
5B.5	CO2 Monitoring												0	0	0
		SUBTOTAL 5B.	**$5,815**	**$0**	**$3,564**	**$0**	**$9,379**		**$903**		**$0**		**$2,057**	**$12,339**	**$20**
6	COMBUSTION TURBINE/ACCESSORIES														
6.1	Combustion Turbine Generator		$92,026	$0	$6,583	$0	$98,609	9.5%	9,348	10%	9,861	10.0%	11,782	129,600	214
6.2	Syngas Expander		$5,550	$0	$767	$0	$6,316	9.5%	600	0%	0	15.0%	1,038	7,954	13
6.3	Compressed Air Piping		$0	$0	$0	$0	$0	0.0%	0	0%	0	0.0%	0	0	0
6.4	Combustion Turbine Foundations		$0	$887	$982	$0	$1,868	9.4%	175	0%	0	30.0%	613	2,656	4
		SUBTOTAL 6.	**$97,576**	**$887**	**$8,331**	**$0**	**$106,794**		**$10,123**		**$9,861**		**$13,432**	**$140,210**	**$231**
7	HRSG, DUCTING & STACK														
7.1	Heat Recovery Steam Generator		$34,760	$0	$4,942	$0	$39,702	9.5%	$3,775	0%	$0	10.0%	$4,348	$47,825	$79
7.2	Open		$0	$0	$0	$0	$0	0.0%	$0	0%	$0	0.0%	$0	$0	$0
7.3	Ductwork		$0	$1,711	$1,221	$0	$2,932	8.8%	$257	0%	$0	20.0%	$638	$3,827	$6
7.4	Stack		$3,338	$0	$1,254	$0	$4,592	9.6%	$440	0%	$0	10.0%	$503	$5,535	$9
7.9	HRSG, Duct & Stack Foundations		$0	$669	$642	$0	$1,311	9.3%	$122	0%	$0	30.0%	$430	$1,863	$3
		SUBTOTAL 7.	**$38,098**	**$2,380**	**$8,060**	**$0**	**$48,538**		**$4,594**		**$0**		**$5,919**	**$59,050**	**$97**
8	STEAM TURBINE GENERATOR														
8.1	Steam TG & Accessories		$29,446	$0	$5,034	$0	$34,480	9.6%	$3,308	0%	$0	10.0%	$3,779	$41,567	$68
8.2	Turbine Plant Auxiliaries		$204	$0	$468	$0	$672	9.8%	$66	0%	$0	10.0%	$74	$811	$1
8.3	Condenser & Auxiliaries		$5,250	$0	$1,541	$0	$6,792	9.6%	$649	0%	$0	10.0%	$744	$8,185	$13
8.4	Steam Piping		$5,058	$0	$3,558	$0	$8,616	8.6%	$740	0%	$0	25.0%	$2,339	$11,695	$19
8.9	TG Foundations		$0	$1,012	$1,711	$0	$2,723	9.5%	$258	0%	$0	30.0%	$894	$3,876	$6
		SUBTOTAL 8.	**$39,958**	**$1,012**	**$12,312**	**$0**	**$53,282**		**$5,022**		**$0**		**$7,830**	**$66,134**	**$109**
9	COOLING WATER SYSTEM														
9.1	Cooling Towers		$6,657	$0	$1,211	$0	$7,868	9.5%	$749	0%	$0	15.0%	$1,293	$9,910	$16
9.2	Circulating Water Pumps		$1,722	$0	$124	$0	$1,847	8.4%	$156	0%	$0	15.0%	$300	$2,303	$4
9.3	Circ. Water System Auxiliaries		$146	$0	$21	$0	$167	9.5%	$16	0%	$0	15.0%	$27	$210	$0
9.4	Circ. Water Piping		$0	$6,091	$1,579	$0	$7,670	9.0%	$693	0%	$0	20.0%	$1,673	$10,036	$17
9.5	Make-up Water System		$341	$0	$488	$0	$829	9.6%	$80	0%	$0	20.0%	$182	$1,090	$2
9.6	Component Cooling Water System		$719	$860	$612	$0	$2,191	9.4%	$205	0%	$0	20.0%	$479	$2,875	$5
9.9	Circ. Water System Foundations		$0	$2,236	$3,801	$0	$6,036	9.5%	$572	0%	$0	30.0%	$1,983	$8,591	$14
		SUBTOTAL 9.	**$9,586**	**$9,186**	**$7,836**	**$0**	**$26,608**		**$2,471**		**$0**		**$5,937**	**$35,016**	**$58**

Exhibit 4-146 Case 2 D3A (25%) Capital Costs (continued)

Department:	NETL Office of Systems Analysis and Planning			**Cost Base:**	Jun 2007
Project:	CO2 Capture Sensitivity Systems Analysis			**Prepared:**	14-Jun-10
Case:	Case 2 D3A - GEE IGCC w/ two WGS bypass (25% CO2 Capture)				**x $1, 000**
Plant Size:	607.02 MW, net	Capital Charge Factor 0.1773	Capacity Factor 0.8		

Acct No.	Item/Description	Equipment Cost	Material Cost	Labor Direct	Labor Indirect	Bare Erected	Eng'g CM H.O. & %	Eng'g CM H.O. & Total	Process Cont. %	Process Cont. Total	Project Cont. %	Project Cont. Total	TOTAL PLANT COST $	TOTAL PLANT COST $/kW
10	ASH/SPENT SORBENT HANDLING SYS													
10.1	Slag Dewatering & Cooling	$11,758	$6,484	$13,171	$0	$31,413	9.7%	$3,032	0%	$0	10.0%	$3,445	$37,890	$62
10.2	Gasifier Ash Depressurization	w/10.1	w/10.1	w/10.1	$0	$0	0.0%	$0	0%	$0	0.0%	$0	$0	$0
10.3	Cleanup Ash Depressurization	w/10.1	w/10.1	w/10.1	$0	$0	0.0%	$0	0%	$0	0.0%	$0	$0	$0
10.4	High Temperature Ash Piping	$0	$0	$0	$0	$0	0.0%	$0	0%	$0	0.0%	$0	$0	$0
10.5	Other Ash Recovery Equipment	$0	$0	$0	$0	$0	0.0%	$0	0%	$0	0.0%	$0	$0	$0
10.6	Ash Storage Silos	$572	$0	$622	$0	$1,195	9.7%	$116	0%	$0	15.0%	$197	$1,507	$2
10.7	Ash Transport & Feed Equipment	$767	$0	$185	$0	$952	9.3%	$89	0%	$0	15.0%	$156	$1,197	$2
10.8	Misc. Ash Handling Equipment	$1,185	$1,452	$434	$0	$3,071	9.5%	$292	0%	$0	15.0%	$504	$3,867	$6
10.9	Ash/Spent Sorbent Foundation	$0	$51	$64	$0	$114	9.4%	$11	0%	$0	30.0%	$37	$162	$0
	SUBTOTAL 10.	**$14,282**	**$7,986**	**$14,476**	**$0**	**$36,745**		**$3,540**		**$0**		**$4,339**	**$44,624**	**$74**
11	ACCESSORY ELECTRIC PLANT													
11.1	Generator Equipment	$961	$0	$951	$0	$1,912	9.5%	$183	0%	$0	10.0%	$209	$2,303	$4
11.2	Station Service Equipment	$4,152	$0	$374	$0	$4,526	9.2%	$417	0%	$0	10.0%	$494	$5,437	$9
11.3	Switchgear & Motor Control	$7,676	$0	$1,396	$0	$9,071	9.3%	$841	0%	$0	15.0%	$1,487	$11,400	$19
11.4	Conduit & Cable Tray	$0	$3,566	$11,763	$0	$15,328	9.7%	$1,483	0%	$0	25.0%	$4,203	$21,013	$35
11.5	Wire & Cable	$0	$6,813	$4,476	$0	$11,289	7.3%	$820	0%	$0	25.0%	$3,027	$15,136	$25
11.6	Protective Equipment	$0	$686	$2,496	$0	$3,182	9.8%	$311	0%	$0	15.0%	$524	$4,016	$7
11.7	Standby Equipment	$236	$0	$231	$0	$467	9.5%	$45	0%	$0	15.0%	$77	$588	$1
11.8	Main Power Transformers	$17,787	$0	$146	$0	$17,934	7.6%	$1,356	0%	$0	15.0%	$2,894	$22,184	$37
11.9	Electrical Foundations	$0	$159	$417	$0	$577	9.6%	$55	0%	$0	30.0%	$190	$821	$1
	SUBTOTAL 11.	**$30,812**	**$11,223**	**$22,250**	**$0**	**$64,285**		**$5,511**		**$0**		**$13,104**	**$82,900**	**$137**
12	INSTRUMENTATION & CONTROL													
12.1	IGCC Control Equipment	w/4.1	$0	w/4.1	$0	$0	0.0%	$0	0%	$0	0.0%	$0	$0	$0
12.2	Combustion Turbine Control	w/6.1	$0	w/6.1	$0	$0	0.0%	$0	0%	$0	0.0%	$0	$0	$0
12.3	Steam Turbine Control	w/8.1	$0	w/8.1	$0	$0	0.0%	$0	0%	$0	0.0%	$0	$0	$0
12.4	Other Major Component Control	$1,045	$0	$698	$0	$1,743	9.5%	$165	5%	$87	15.0%	$299	$2,295	$4
12.5	Signal Processing Equipment	w/12.7	$0	w/12.7	$0	$0	0.0%	$0	0%	$0	0.0%	$0	$0	$0
12.6	Control Boards,Panels & Racks	$240	$0	$154	$0	$394	9.5%	$37	5%	$20	20.0%	$90	$541	$1
12.7	Computer & Accessories	$5,575	$0	$178	$0	$5,754	9.2%	$528	5%	$288	10.0%	$657	$7,227	$12
12.8	Instrument Wiring & Tubing	$0	$1,948	$3,982	$0	$5,929	8.5%	$503	5%	$296	25.0%	$1,682	$8,411	$14
12.9	Other I & C Equipment	$3,727	$0	$1,810	$0	$5,537	9.4%	$521	5%	$277	15.0%	$950	$7,285	$12
	SUBTOTAL 12.	**$10,588**	**$1,948**	**$6,822**	**$0**	**$19,357**		**$1,754**		**$968**		**$3,679**	**$25,758**	**$42**
13	IMPROVEMENTS TO SITE													
13.1	Site Preparation	0	108	2,297	0	2,405	9.9%	239	0%	0	30.0%	793	3,437	6
13.2	Site Improvements	0	1,912	2,541	0	4,453	9.9%	439	0%	0	30.0%	1,468	6,359	10
13.3	Site Facilities	3,426	0	3,615	0	7,041	9.9%	694	0%	0	30.0%	2,321	10,056	17
	SUBTOTAL 13.	**$3,426**	**$2,019**	**$8,453**	**$0**	**$13,899**		**$1,372**		**$0**		**$4,581**	**$19,852**	**$33**

Exhibit 4-146 Case 2 D3A (25%) Capital Costs (continued)

Department:	NETL Office of Systems Analysis and Planning			**Cost Base:**	Jun 2007
Project:	CO2 Capture Sensitivity Systems Analysis			**Prepared:**	27-May-11
Case:	Case 2 D3A - GEE IGCC w/ two WGS bypass (25% CO2 Capture)				**x $1, 000**
Plant Size:	607.02 MW, net	Capital Charge Factor 0.1773	Capacity Factor 0.8		

Acct No.	Item/Description	Equipment Cost	Material Cost	Labor Direct	Labor Indirect	Bare Erected	Eng'g CM H.O. & %	Eng'g CM H.O. & Total	Process Cont. %	Process Cont. Total	Project Cont. %	Project Cont. Total	TOTAL PLANT COST $	TOTAL PLANT COST $/kW
14	BUILDINGS & STRUCTURES													
14.1	Combustion Turbine Area	$0	$263	$149	$0	$412	8.8%	$36	0%	$0	20.0%	$90	$539	$1
14.2	Steam Turbine Building	$0	$2,361	$3,363	$0	$5,724	9.2%	$527	0%	$0	15.0%	$938	$7,189	$12
14.3	Administration Building	$0	$875	$634	$0	$1,509	8.9%	$134	0%	$0	15.0%	$247	$1,890	$3
14.4	Circulation Water Pumphouse	$0	$156	$82	$0	$238	8.8%	$21	0%	$0	15.0%	$39	$298	$0
14.5	Water Treatment Buildings	$0	$521	$508	$0	$1,028	9.0%	$93	0%	$0	15.0%	$168	$1,290	$2
14.6	Machine Shop	$0	$448	$306	$0	$754	8.9%	$67	0%	$0	15.0%	$123	$944	$2
14.7	Warehouse	$0	$723	$467	$0	$1,189	8.9%	$105	0%	$0	15.0%	$194	$1,489	$2
14.8	Other Buildings & Structures	$0	$433	$337	$0	$770	8.9%	$69	0%	$0	20.0%	$168	$1,007	$2
14.9	Waste Treating Building & Str.	$0	$962	$1,838	$0	$2,799	9.3%	$261	0%	$0	20.0%	$612	$3,672	$6
	SUBTOTAL 14.	**$0**	**$6,740**	**$7,685**	**$0**	**$14,425**		**$1,313**		**$0**		**$2,578**	**$18,316**	**$30**
	Total Cost	**$670,759**	**$73,022**	**$271,243**	**$0**	**$1,015,024**		**$95,417**		**$55,953**		**$179,985**	**$1,346,380**	**$2,218**

Owner's Costs			
Preproduction Costs			
6 Months All Labor		$12,719	$21
1 Month Maintenance Materials		$2,756	$5
1 Month Non-fuel Consumables		$273	$0
1 Month Waste Disposal		$302	$0
25% of 1 Months Fuel Cost at 100% CF		$1,613	$3
2% of TPC		$26,928	$44
Total		$44,590	$73
Inventory Capital			
60 day supply of fuel and consumables at 100% CF		$13,446	$22
0.5% of TPC (spare parts)		$6,732	$11
Total		$20,178	$33
Initial Cost for Catalyst and Chemicals		$4,937	$8
Land		$900	$1
Other Owner's Costs		$201,957	$333
Financing Costs		$36,352	$60
Total Overnight Costs (TOC)		**$1,655,294**	**$2,727**
TASC Multiplier	(IOU, high risk, 35 year)	1.140	
Total As-Spent Cost (TASC)		**$1,887,035**	**$3,109**

Exhibit 4-147 Case 2 D3A Initial and Annual O&M Expenses

INITIAL & ANNUAL O&M EXPENSES			
Case:	Case 2 D3A - GEE IGCC w/ two WGS bypass (25% CO2 Capture)		
Plant Size (MWe):	607.02	**Heat Rate (Btu/kWh):**	8,894
Primary/Secondary Fuel:	Illinois #6 Bituminous Coal	**Fuel Cost ($/MM Btu):**	1.64
Design/Construction	5 years	**Book Life (yrs):**	30
TPC (Plant Cost) Year:	Jun 2007	**TPI Year:**	2015
Capacity Factor (%):	80	**CO_2 Captured (TPD):**	3,127

OPERATING & MAINTENANCE LABOR

Operating Labor

Operating Labor Rate (base):	$34.65	$/hour
Operating Labor Burden:	30.00	% of base
Labor Overhead Charge:	25.00	% of labor

Operating Labor Requirements per Shift:	units/mod.	Total Plant
Skilled Operator	2.0	2.0
Operator	10.0	10.0
Foreman	1.0	1.0
Lab Tech's etc.	3.0	3.0
TOTAL Operating Jobs	16.0	16.0

	Annual Costs $	Annual Costs $/kW-net
Annual Operating Labor Cost (calc'd)	$6,313,507	$10.401
Maintenance Labor Cost (calc'd)	$14,036,245	$23.123
Administrative & Support Labor (calc'd)	$5,087,438	$8.381
Property Taxes & Insurance	$26,927,596	$44.360
TOTAL FIXED OPERATING COSTS	**$52,364,786**	**$86.266**

VARIABLE OPERATING COSTS

	$	$/kWh-net
Maintenance Material Costs (calc'd)	**$26,460,253**	**0.00622**

Consumables	Consumption Initial	Consumption /Day	Unit Cost	Initial Cost	$	$/kWh-net
Water (/1000 gallons)	0	3,380	1.08	$0	$1,067,697	0.00025
Chemicals						
MU & WT Chem. (lbs)	0	20,139	0.17	$0	$1,017,765	0.00024
Carbon (Mercury Removal) (lb)	55,244	95	1.05	$58,016	$29,132	0.00001
COS Catalyst (m3)	417	0.29	2,397.36	$998,740	$199,748	0.00005
Water Gas Shift Catalyst (ft3)	16	0.01	498.83	$7,981	$1,596	0.00000
Selexol Solution (gal)	289,013	59	13.40	$3,872,261	$230,395	0.00005
SCR Catalyst (m3)	0	0	0.00	$0	$0	0.00000
Ammonia (19% NH3) (ton)	0	0	0.00	$0	$0	0.00000
Claus Catalyst (ft3)	0	1.92	131.27	$0	$73,424	0.00002
Subtotal Chemicals				**$4,936,998**	**$1,552,059**	**0.00036**
Other						
Supplemental Fuel (MMBtu)	0	0	0.00	$0	$0	0.00000
Gases, N2 etc. (/100scf)	0	0	0.00	$0	$0	0.00000
L.P. Steam (/1000 pounds)	0	0	0.00	$0	$0	0.00000
Subtotal Other				**$0**	**$0**	**0.00000**
Waste Disposal						
Spent Mercury Sorbent (lb)	0	95	0.42	$0	$11,651	0.00000
Flyash (ton)	0	0	0.00	$0	$0	0.00000
Slag (ton)	0	609	16.23	$0	$2,886,704	0.00068
Subtotal Solid Waste Disposal				**$0**	**$2,898,355**	**$0**
By-products & Emissions						
Sulfur (tons)	0	139	0.00	$0	$0	0.00000
Subtotal By-Products				**$0**	**$0**	**$0**
TOTAL VARIABLE OPERATING COSTS					**$31,978,364**	**0.00752**
Coal FUEL (tons)	**0**	**5,553**	**38.19**	**$0**	**$61,920,722**	**0.01456**

Exhibit 4-148 Case 2 D3B (45%) Capital Costs

Department:	NETL Office of Systems Analysis and Planning	**Cost Base:**	Jun 2007
Project:	CO2 Capture Sensitivity Systems Analysis	**Prepared:**	14-Jun-10
Case:	Case 2 D3B - GEE IGCC w/ two WGS bypass (45% CO2 Capture)		**x $1, 000**
Plant Size:	590.05 MW, net	Capital Charge Factor 0.1773	Capacity Factor 0.8

Acct No.	Item/Description	Equipment Cost	Material Cost	Labor Direct	Labor Indirect	Bare Erected	Eng'g CM H.O. & %	Eng'g CM H.O. & Total	Process Cont. %	Process Cont. Total	Project Cont. %	Project Cont. Total	TOTAL PLANT COST $	TOTAL PLANT COST $/kW
1	COAL HANDLING SYSTEM													
1.1	Coal Receive & Unload	$3,667	$0	$1,792	$0	$5,460	9.0%	$489	0%	$0	20.0%	$1,190	$7,139	$12
1.2	Coal Stackout & Reclaim	$4,739	$0	$1,149	$0	$5,888	8.8%	$516	0%	$0	20.0%	$1,281	$7,685	$13
1.3	Coal Conveyors & Yd Crus	$4,406	$0	$1,137	$0	$5,543	8.8%	$487	0%	$0	20.0%	$1,206	$7,236	$12
1.4	Other Coal Handling	$1,153	$0	$263	$0	$1,416	8.8%	$124	0%	$0	20.0%	$308	$1,848	$3
1.5	Sorbent Receive & Unload	$0	$0	$0	$0	$0	0.0%	$0	0%	$0	0.0%	$0	$0	$0
1.6	Sorbent Stackout & Reclaim	$0	$0	$0	$0	$0	0.0%	$0	0%	$0	0.0%	$0	$0	$0
1.7	Sorbent Conveyors	$0	$0	$0	$0	$0	0.0%	$0	0%	$0	0.0%	$0	$0	$0
1.8	Other Sorbent Handling	$0	$0	$0	$0	$0	0.0%	$0	0%	$0	0.0%	$0	$0	$0
1.9	Coal & Sorbent Hnd.Foundations	$0	$2,595	$6,489	$0	$9,084	9.6%	$871	0%	$0	20.0%	$1,991	$11,946	$20
	SUBTOTAL 1.	**$13,966**	**$2,595**	**$10,830**	**$0**	**$27,391**		**$2,486**		**$0**		**$5,975**	**$35,853**	**$61**
2	COAL PREP & FEED SYSTEMS													
2.1	Coal Crushing & Drying	w/2.3	$0	w2.3	$0	$0	0.0%	0	0%	0	0.0%	$0	$0	$0
2.2	Prepared Coal Storage & Feed	$1,564	$374	$245	$0	$2,184	8.6%	187	0%	0	20.0%	$474	$2,845	$5
2.3	Slurry Prep & Feed	$21,388	$0	$9,440	$0	$30,828	9.1%	2,801	5%	1,541	20.0%	$7,034	$42,204	$72
2.4	Misc. Coal Prep & Feed	$860	$626	$1,877	$0	$3,363	9.2%	309	0%	0	20.0%	$734	$4,406	$7
2.5	Sorbent Prep Equipment	$0	$0	$0	$0	$0	0.0%	0	0%	0	15.0%	$0	$0	$0
2.6	Sorbent Storage & Feed	$0	$0	$0	$0	$0	0.0%	0	0%	0	15.0%	$0	$0	$0
2.7	Sorbent Injection System	$0	$0	$0	$0	$0	0.0%	0	0%	0	0.0%	$0	$0	$0
2.8	Booster Air Supply System	$0	$0	$0	$0	$0	0.0%	0	0%	0	0.0%	$0	$0	$0
2.9	Coal & Sorbent Feed Foundation	$0	$3,343	$2,745	$0	$6,088	9.3%	564	0%	0	20.0%	$1,330	$7,983	$14
	SUBTOTAL 2.	**$23,812**	**$4,344**	**$14,307**	**$0**	**$42,463**		**$3,861**		**$1,541**		**$9,573**	**$57,438**	**$97**
3	FEEDWATER & MISC. BOP SYSTEMS													
3.1	Feedwater System	2,864	4,918	2,596	0	10,377	9.3%	961	0%	0	20.0%	$2,268	$13,606	$23
3.2	Water Makeup & Pretreating	648	68	362	0	1,078	9.5%	103	0%	0	30.0%	$354	$1,535	$3
3.3	Other Feedwater Subsystems	1,567	529	476	0	2,573	9.0%	231	0%	0	20.0%	$561	$3,365	$6
3.4	Service Water Systems	371	764	2,650	0	3,785	9.8%	369	0%	0	30.0%	$1,246	$5,400	$9
3.5	Other Boiler Plant Systems	1,990	771	1,911	0	4,672	9.5%	443	0%	0	20.0%	$1,023	$6,138	$10
3.6	FO Supply Sys & Nat Gas	$313	$590	$551	$0	1,454	9.6%	140	0%	0	20.0%	$319	$1,913	$3
3.7	Waste Treatment Equipment	906	0	553	0	1,458	9.7%	142	0%	0	30.0%	$480	$2,080	$4
3.8	Misc. Power Plant Equipment	$1,111	$149	$571	$0	1,831	9.7%	177	0%	0	30.0%	$602	$2,610	$4
	SUBTOTAL 3.	**$9,769**	**$7,789**	**$9,670**	**$0**	**$27,227**		**$2,566**		**$0**		**$6,853**	**$36,647**	**$62**
4	GASIFIER & ACCESSORIES													
4.1	Syngas Cooler Gasifier System	$111,036	$0	$60,840	$0	$171,875	9.2%	$15,745	13.9%	$23,853	15.3%	$32,426	$243,899	$413
4.2	Syngas Cooler (w/ Gasifier - $)	w/4.1	$0	w/ 4.1	$0	$0	0.0%	$0	0%	$0	0.0%	$0	$0	$0
4.3	ASU/Oxidant Compression	$188,280	$0	w/equip.	$0	$188,280	9.7%	$18,250	0%	$0	10.0%	$20,653	$227,183	$385
4.4	Scrubber & Low Temperature Cooling	5,899	$4,801	$4,997	$0	$15,698	9.6%	$1,507	0%	$0	20.0%	$3,441	$20,646	$35
4.5	Black Water & Sour Gas Section	w/4.1	$0	w/4.1	$0	$0	0.0%	$0	0%	$0	0.0%	$0	$0	$0
4.6	Soot Recovery & SARU	$1,799	$854	$1,688	$0	$4,342	9.6%	$418	0%	$0	20.0%	$952	$5,712	$10
4.7	Major Component Rigging	w/4.1	$0	w/4.1	$0	$0	0.0%	$0	0%	$0	0.0%	$0	$0	$0
4.8	Gasification Foundations	$0	$6,325	$5,280	$0	$11,604	9.3%	$1,075	0%	$0	25.0%	$3,170	$15,849	$27
	SUBTOTAL 4.	**$307,014**	**$11,980**	**$72,805**	**$0**	**$391,799**		**$36,996**		**$23,853**		**$60,642**	**$513,290**	**$870**

Exhibit 4-148 Case 2 D3B (45%) Capital Costs (continued)

Department:	NETL Office of Systems Analysis and Planning			**Cost Base:**	Jun 2007
Project:	CO2 Capture Sensitivity Systems Analysis			**Prepared:**	14-Jun-10
Case:	Case 2 D3B - GEE IGCC w/ two WGS bypass (45% CO2 Capture)				**x $1, 000**
Plant Size:	590.05 MW, net	Capital Charge Factor 0.1773	Capacity Factor 0.8		

Acct No.	Item/Description	Equipment Cost	Material Cost	Labor Direct	Labor Indirect	Bare Erected	Eng'g CM H.O. & %	Eng'g CM H.O. & Total	Process Cont. %	Process Cont. Total	Project Cont. %	Project Cont. Total	TOTAL PLANT COST $	TOTAL PLANT COST $/kW
5A	GAS CLEANUP & PIPING							*						
5A.1	Double Stage Selexol	$60,416	$0	$51,265	$0	$111,681	9.7%	$10,801	20%	$22,336	20.0%	$28,964	$173,782	$295
5A.2	Elemental Sulfur Plant	$10,086	$2,010	$13,013	$0	$25,110	9.7%	$2,439	0%	$0	20.0%	$5,510	$33,058	$56
5A.3	Mercury Removal	$1,159	$0	$882	$0	$2,041	9.7%	$197	5%	$102	20.0%	$468	$2,808	$5
5A.4	Shift Reactors	$4,761	$0	$1,917	$0	$6,677	9.6%	$640	0%	$0	20.0%	$1,464	$8,781	$15
5A.5	COS Hydrolysis	$2,778	$0	$3,627	$0	$6,405	9.7%	$623	0%	$0	20.0%	$1,405	$8,433	$14
5A.6	Particulate Removal	$0	$0	$0	$0	$0	0.0%	$0	0%	$0	10.0%	$0	$0	$0
5A.7	Blowback Gas Systems	$1,316	$0	$249	$0	$1,565	12.2%	$191	0%	$0	20.0%	$351	$2,107	$4
5A.8	Fuel Gas Piping	$0	$609	$427	$0	$1,036	9.3%	$96	0%	$0	20.0%	$226	$1,358	$2
5A.9	HGCU Foundations	$0	$624	$402	$0	$1,027	9.2%	$94	0%	$0	30.0%	$336	$1,457	$2
5A.10	Open	$0	$0	$0	$0	$0	0.0%	$0	0%	$0	0.0%	$0	$0	$0
	SUBTOTAL 5A.	**$80,516**	**$3,243**	**$71,782**	**$0**	**$155,541**		**$15,081**		**$22,438**		**$38,724**	**$231,785**	**$393**
5B	CO2 REMOVAL & COMPRESSION													
5B.1	CO2 Removal System	$0	$0	$0	$0	$0	9.6%	$0	0%	$0	20.0%	$0	$0	$0
5B.2	CO2 Compression & Drying	$9,615	$0	$5,894	$0	$15,509	9.6%	$1,494	0%	$0	20.0%	$3,401	$20,403	$35
5B.3	CO2 Pipeline											0	0	0
5B.4	CO2 Storage											0	0	0
5B.5	CO2 Monitoring											0	0	0
	SUBTOTAL 5B.	**$9,615**	**$0**	**$5,894**	**$0**	**$15,509**		**$1,494**		**$0**		**$3,401**	**$20,403**	**$35**
6	COMBUSTION TURBINE/ACCESSORIES													
6.1	Combustion Turbine Generator	$92,026	$0	$6,583	$0	$98,609	9.5%	9,348	10%	9,861	10.0%	11,782	129,600	220
6.2	Syngas Expander	$5,550	$0	$767	$0	$6,316	9.5%	600	0%	0	15.0%	1,038	7,954	13
6.3	Compressed Air Piping	$0	$0	$0	$0	$0	0.0%	0	0%	0	0.0%	0	0	0
6.4	Combustion Turbine Foundations	$0	$887	$982	$0	$1,868	9.4%	175	0%	0	30.0%	613	2,656	5
	SUBTOTAL 6.	**$97,576**	**$887**	**$8,331**	**$0**	**$106,794**		**$10,123**		**$9,861**		**$13,432**	**$140,210**	**$238**
7	HRSG, DUCTING & STACK													
7.1	Heat Recovery Steam Generator	$34,421	$0	$4,894	$0	$39,315	9.5%	$3,738	0%	$0	10.0%	$4,305	$47,359	$80
7.2	Open	$0	$0	$0	$0	$0	0.0%	$0	0%	$0	0.0%	$0	$0	$0
7.3	Ductwork	$0	$1,717	$1,225	$0	$2,943	8.8%	$258	0%	$0	20.0%	$640	$3,841	$7
7.4	Stack	$3,350	$0	$1,259	$0	$4,609	9.6%	$442	0%	$0	10.0%	$505	$5,555	$9
7.9	HRSG, Duct & Stack Foundations	$0	$671	$645	$0	$1,316	9.3%	$123	0%	$0	30.0%	$432	$1,870	$3
	SUBTOTAL 7.	**$37,771**	**$2,389**	**$8,023**	**$0**	**$48,182**		**$4,560**		**$0**		**$5,882**	**$58,625**	**$99**
8	STEAM TURBINE GENERATOR													
8.1	Steam TG & Accessories	$29,111	$0	$4,977	$0	$34,088	9.6%	$3,271	0%	$0	10.0%	$3,736	$41,095	$70
8.2	Turbine Plant Auxiliaries	$202	$0	$463	$0	$664	9.8%	$65	0%	$0	10.0%	$73	$802	$1
8.3	Condenser & Auxiliaries	$5,226	$0	$1,534	$0	$6,761	9.6%	$646	0%	$0	10.0%	$741	$8,148	$14
8.4	Steam Piping	$5,056	$0	$3,557	$0	$8,613	8.6%	$740	0%	$0	25.0%	$2,338	$11,691	$20
8.9	TG Foundations	$0	$1,001	$1,692	$0	$2,693	9.5%	$255	0%	$0	30.0%	$884	$3,832	$6
	SUBTOTAL 8.	**$39,595**	**$1,001**	**$12,222**	**$0**	**$52,819**		**$4,977**		**$0**		**$7,772**	**$65,568**	**$111**
9	COOLING WATER SYSTEM													
9.1	Cooling Towers	$6,825	$0	$1,242	$0	$8,067	9.5%	$768	0%	$0	15.0%	$1,325	$10,160	$17
9.2	Circulating Water Pumps	$1,767	$0	$128	$0	$1,895	8.4%	$160	0%	$0	15.0%	$308	$2,363	$4
9.3	Circ. Water System Auxiliaries	$149	$0	$21	$0	$170	9.5%	$16	0%	$0	15.0%	$28	$215	$0
9.4	Circ. Water Piping	$0	$6,223	$1,613	$0	$7,836	9.0%	$708	0%	$0	20.0%	$1,709	$10,253	$17
9.5	Make-up Water System	$356	$0	$509	$0	$865	9.6%	$83	0%	$0	20.0%	$190	$1,138	$2
9.6	Component Cooling Water System	$735	$879	$625	$0	$2,238	9.4%	$210	0%	$0	20.0%	$490	$2,938	$5
9.9	Circ. Water System Foundations	$0	$2,284	$3,883	$0	$6,167	9.5%	$585	0%	$0	30.0%	$2,026	$8,777	$15
	SUBTOTAL 9.	**$9,832**	**$9,385**	**$8,021**	**$0**	**$27,238**		**$2,530**		**$0**		**$6,075**	**$35,843**	**$61**

Exhibit 4-148 Case 2 D3B (45%) Capital Costs (continued)

Department:	NETL Office of Systems Analysis and Planning			**Cost Base:**	Jun 2007
Project:	CO2 Capture Sensitivity Systems Analysis			**Prepared:**	14-Jun-10
Case:	Case 2 D3B - GEE IGCC w/ two WGS bypass (45% CO2 Capture)				**x $1, 000**
Plant Size:	590.05 MW, net	Capital Charge Factor 0.1773	Capacity Factor 0.8		

Acct No.	Item/Description	Equipment Cost	Material Cost	Labor Direct	Labor Indirect	Bare Erected	Eng'g CM H.O. & %	Eng'g CM H.O. & Total	Process Cont. %	Process Cont. Total	Project Cont. %	Project Cont. Total	TOTAL PLANT COST $	TOTAL PLANT COST $/kW
10	ASH/SPENT SORBENT HANDLING SYS													
10.1	Slag Dewatering & Cooling	$11,869	$6,545	$13,296	$0	$31,710	9.7%	$3,061	0%	$0	10.0%	$3,477	$38,247	$65
10.2	Gasifier Ash Depressurization	w/10.1	w/10.1	w/10.1	$0	$0	0.0%	$0	0%	$0	0.0%	$0	$0	$0
10.3	Cleanup Ash Depressurization	w/10.1	w/10.1	w/10.1	$0	$0	0.0%	$0	0%	$0	0.0%	$0	$0	$0
10.4	High Temperature Ash Piping	$0	$0	$0	$0	$0	0.0%	$0	0%	$0	0.0%	$0	$0	$0
10.5	Other Ash Recovery Equipment	$0	$0	$0	$0	$0	0.0%	$0	0%	$0	0.0%	$0	$0	$0
10.6	Ash Storage Silos	$577	$0	$628	$0	$1,205	9.7%	$117	0%	$0	15.0%	$198	$1,520	$3
10.7	Ash Transport & Feed Equipment	$774	$0	$187	$0	$961	9.3%	$90	0%	$0	15.0%	$158	$1,208	$2
10.8	Misc. Ash Handling Equipment	$1,195	$1,464	$437	$0	$3,097	9.5%	$295	0%	$0	15.0%	$509	$3,900	$7
10.9	Ash/Spent Sorbent Foundation	$0	$51	$64	$0	$115	9.4%	$11	0%	$0	30.0%	$38	$164	$0
	SUBTOTAL 10.	**$14,415**	**$8,060**	**$14,612**	**$0**	**$37,087**		**$3,573**		**$0**		**$4,379**	**$45,039**	**$76**
11	ACCESSORY ELECTRIC PLANT													
11.1	Generator Equipment	$958	$0	$947	$0	$1,905	9.5%	$182	0%	$0	10.0%	$209	$2,295	$4
11.2	Station Service Equipment	$4,308	$0	$388	$0	$4,696	9.2%	$433	0%	$0	10.0%	$513	$5,642	$10
11.3	Switchgear & Motor Control	$7,964	$0	$1,448	$0	$9,412	9.3%	$873	0%	$0	15.0%	$1,543	$11,828	$20
11.4	Conduit & Cable Tray	$0	$3,700	$12,205	$0	$15,904	9.7%	$1,538	0%	$0	25.0%	$4,361	$21,803	$37
11.5	Wire & Cable	$0	$7,069	$4,644	$0	$11,713	7.3%	$851	0%	$0	25.0%	$3,141	$15,705	$27
11.6	Protective Equipment	$0	$686	$2,496	$0	$3,182	9.8%	$311	0%	$0	15.0%	$524	$4,016	$7
11.7	Standby Equipment	$236	$0	$230	$0	$466	9.5%	$44	0%	$0	15.0%	$76	$586	$1
11.8	Main Power Transformers	$17,714	$0	$146	$0	$17,860	7.6%	$1,351	0%	$0	15.0%	$2,882	$22,093	$37
11.9	Electrical Foundations	$0	$158	$416	$0	$574	9.6%	$55	0%	$0	30.0%	$189	$818	$1
	SUBTOTAL 11.	**$31,180**	**$11,613**	**$22,920**	**$0**	**$65,712**		**$5,638**		**$0**		**$13,437**	**$84,787**	**$144**
12	INSTRUMENTATION & CONTROL													
12.1	IGCC Control Equipment	w/4.1	$0	w/4.1	$0	$0	0.0%	$0	0%	$0	0.0%	$0	$0	$0
12.2	Combustion Turbine Control	w/6.1	$0	w/6.1	$0	$0	0.0%	$0	0%	$0	0.0%	$0	$0	$0
12.3	Steam Turbine Control	w/8.1	$0	w/8.1	$0	$0	0.0%	$0	0%	$0	0.0%	$0	$0	$0
12.4	Other Major Component Control	$1,069	$0	$714	$0	$1,782	9.5%	$169	5%	$89	15.0%	$306	$2,346	$4
12.5	Signal Processing Equipment	w/12.7	$0	w/12.7	$0	$0	0.0%	$0	0%	$0	0.0%	$0	$0	$0
12.6	Control Boards,Panels & Racks	$246	$0	$157	$0	$403	9.5%	$38	5%	$20	20.0%	$92	$554	$1
12.7	Computer & Accessories	$5,700	$0	$183	$0	$5,883	9.2%	$540	5%	$294	10.0%	$672	$7,389	$13
12.8	Instrument Wiring & Tubing	$0	$1,991	$4,071	$0	$6,062	8.5%	$514	5%	$303	25.0%	$1,720	$8,600	$15
12.9	Other I & C Equipment	$3,811	$0	$1,850	$0	$5,661	9.4%	$533	5%	$283	15.0%	$971	$7,448	$13
	SUBTOTAL 12.	**$10,825**	**$1,991**	**$6,975**	**$0**	**$19,791**		**$1,794**		**$990**		**$3,761**	**$26,336**	**$45**
13	IMPROVEMENTS TO SITE													
13.1	Site Preparation	0	108	2,312	0	2,420	9.9%	240	0%	0	30.0%	798	3,458	6
13.2	Site Improvements	0	1,924	2,556	0	4,480	9.9%	442	0%	0	30.0%	1,477	6,399	11
13.3	Site Facilities	3,447	0	3,638	0	7,085	9.9%	698	0%	0	30.0%	2,335	10,118	17
	SUBTOTAL 13.	**$3,447**	**$2,032**	**$8,506**	**$0**	**$13,985**		**$1,380**		**$0**		**$4,610**	**$19,975**	**$34**

Exhibit 4-148 Case 2 D3B (45%) Capital Costs (continued)

Department:	NETL Office of Systems Analysis and Planning			**Cost Base:**	Jun 2007
Project:	CO2 Capture Sensitivity Systems Analysis			**Prepared:**	27-May-11
Case:	Case 2 D3B - GEE IGCC w/ two WGS bypass (45% CO2 Capture)				**x $1, 000**
Plant Size:	590.05 MW, net	Capital Charge Factor 0.1773	Capacity Factor 0.8		

Acct No.	Item/Description	Equipment Cost	Material Cost	Labor Direct	Labor Indirect	Bare Erected	Eng'g CM H.O. & %	Eng'g CM H.O. & Total	Process Cont. %	Process Cont. Total	Project Cont. %	Project Cont. Total	TOTAL PLANT COST $	TOTAL PLANT COST $/kW
14	BUILDINGS & STRUCTURES													
14.1	Combustion Turbine Area	$0	$264	$149	$0	$413	8.8%	$36	0%	$0	20.0%	$90	$539	$1
14.2	Steam Turbine Building	$0	$2,367	$3,372	$0	$5,738	9.2%	$528	0%	$0	15.0%	$940	$7,206	$12
14.3	Administration Building	$0	$877	$636	$0	$1,514	8.9%	$135	0%	$0	15.0%	$247	$1,896	$3
14.4	Circulation Water Pumphouse	$0	$159	$84	$0	$243	8.8%	$21	0%	$0	15.0%	$40	$304	$1
14.5	Water Treatment Buildings	$0	$546	$532	$0	$1,078	9.0%	$97	0%	$0	15.0%	$176	$1,351	$2
14.6	Machine Shop	$0	$449	$307	$0	$756	8.9%	$67	0%	$0	15.0%	$124	$947	$2
14.7	Warehouse	$0	$725	$468	$0	$1,193	8.9%	$106	0%	$0	15.0%	$195	$1,493	$3
14.8	Other Buildings & Structures	$0	$434	$338	$0	$772	8.9%	$69	0%	$0	20.0%	$168	$1,010	$2
14.9	Waste Treating Building & Str.	$0	$966	$1,847	$0	$2,813	9.3%	$262	0%	$0	20.0%	$615	$3,690	$6
	SUBTOTAL 14.	**$0**	**$6,787**	**$7,734**	**$0**	**$14,521**		**$1,322**		**$0**		**$2,595**	**$18,437**	**$31**
	Total Cost	**$689,332**	**$74,096**	**$282,632**	**$0**	**$1,046,059**		**$98,381**		**$58,683**		**$187,111**	**$1,390,235**	**$2,356**

Owner's Costs			
Preproduction Costs			
6 Months All Labor		$12,987	$22
1 Month Maintenance Materials		$2,841	$5
1 Month Non-fuel Consumables		$311	$1
1 Month Waste Disposal		$307	$1
25% of 1 Months Fuel Cost at 100% CF		$1,637	$3
2% of TPC		$27,805	$47
Total		$45,887	$78
Inventory Capital			
60 day supply of fuel and consumables at 100% CF		$13,720	$23
0.5% of TPC (spare parts)		$6,951	$12
Total		$20,671	$35
Initial Cost for Catalyst and Chemicals		$5,828	$10
Land		$900	$2
Other Owner's Costs		$208,535	$353
Financing Costs		$37,536	$64
Total Overnight Costs (TOC)		**$1,709,592**	**$2,897**
TASC Multiplier	(IOU, high risk, 35 year)	1.140	
Total As-Spent Cost (TASC)		**$1,948,935**	**$3,303**

Exhibit 4-149 Case 2 D3B Initial and Annual O&M Expenses

INITIAL & ANNUAL O&M EXPENSES			
Case:	Case 2 D3B - GEE IGCC w/ two WGS bypass (45% CO2 Capture)		
Plant Size (MWe):	590.05	**Heat Rate (Btu/kWh):**	9,289
Primary/Secondary Fuel:	Illinois #6 Bituminous Coal	**Fuel Cost ($/MM Btu):**	1.64
Design/Construction	5 years	**Book Life (yrs):**	30
TPC (Plant Cost) Year:	Jun 2007	**TPI Year:**	2015
Capacity Factor (%):	80	**CO_2 Captured (TPD):**	5,732

OPERATING & MAINTENANCE LABOR

Operating Labor

Operating Labor Rate (base):	$34.65	$/hour
Operating Labor Burden:	30.00	% of base
Labor Overhead Charge:	25.00	% of labor

Operating Labor Requirements per Shift:	units/mod.	Total Plant
Skilled Operator	2.0	2.0
Operator	10.0	10.0
Foreman	1.0	1.0
Lab Tech's etc.	3.0	3.0
TOTAL Operating Jobs	16.0	16.0

	Annual Costs $	Annual Costs $/kW-net
Annual Operating Labor Cost (calc'd)	$6,313,507	$10.700
Maintenance Labor Cost (calc'd)	$14,465,416	$24.516
Administrative & Support Labor (calc'd)	$5,194,731	$8.804
Property Taxes & Insurance	$27,804,693	$47.123
TOTAL FIXED OPERATING COSTS	**$53,778,347**	**$91.142**

VARIABLE OPERATING COSTS

	$	$/kWh-net
Maintenance Material Costs (calc'd)	**$27,269,300**	**0.00659**

Consumables	Consumption Initial	Consumption /Day	Unit Cost	Initial Cost	$	$/kWh-net
Water (/1000 gallons)	0	3,629	1.08	$0	$1,146,154	0.00028
Chemicals						
MU & WT Chem. (lbs)	0	21,619	0.17	$0	$1,092,552	0.00026
Carbon (Mercury Removal) (lb)	62,427	107	1.05	$65,559	$32,812	0.00001
COS Catalyst (m3)	294	0.20	2,397.36	$705,303	$141,061	0.00003
Water Gas Shift Catalyst (ft3)	2,296	1.57	498.83	$1,145,316	$229,063	0.00006
Selexol Solution (gal)	291,937	70	13.40	$3,911,435	$273,860	0.00007
SCR Catalyst (m3)	0	0	0.00	$0	$0	0.00000
Ammonia (19% NH3) (ton)	0	0	0.00	$0	$0	0.00000
Claus Catalyst (ft3)	0	1.94	131.27	$0	$74,521	0.00002
Subtotal Chemicals				**$5,827,613**	**$1,843,868**	**0.00045**
Other						
Supplemental Fuel (MMBtu)	0	0	0.00	$0	$0	0.00000
Gases, N2 etc. (/100scf)	0	0	0.00	$0	$0	0.00000
L.P. Steam (/1000 pounds)	0	0	0.00	$0	$0	0.00000
Subtotal Other				**$0**	**$0**	**0.00000**
Waste Disposal						
Spent Mercury Sorbent (lb)	0	107	0.42	$0	$13,122	0.00000
Flyash (ton)	0	0	0.00	$0	$0	0.00000
Slag (ton)	0	619	16.23	$0	$2,930,765	0.00071
Subtotal Solid Waste Disposal				**$0**	**$2,943,888**	**$0**
By-products & Emissions						
Sulfur (tons)	0	141	0.00	$0	$0	0.00000
Subtotal By-Products				**$0**	**$0**	**$0**
TOTAL VARIABLE OPERATING COSTS					**$33,203,210**	**0.00803**
Coal FUEL (tons)	**0**	**5,638**	**38.19**	**$0**	**$62,865,489**	**0.01520**

Exhibit 4-150 Case 2 D3C (60%) Capital Costs

Department:	NETL Office of Systems Analysis and Planning		**Cost Base:**	Jun 2007
Project:	CO2 Capture Sensitivity Systems Analysis		**Prepared:**	14-Jun-10
Case:	Case 2 D3C - GEE IGCC w/ two WGS bypass (60% CO2 Capture)			**x $1, 000**
Plant Size:	577.43 MW, net	Capital Charge Factor 0.1773	Capacity Factor 0.8	

		Equipment	Material	Labor		Bare	Eng'g CM H.O. &		Process Cont.		Project Cont.		TOTAL PLANT COST	
Acct No.	**Item/Description**	**Cost**	**Cost**	**Direct**	**Indirect**	**Erected**	**%**	**Total**	**%**	**Total**	**%**	**Total**	**$**	**$/kW**
1	COAL HANDLING SYSTEM													
1.1	Coal Receive & Unload	$3,697	$0	$1,806	$0	$5,503	9.0%	$493	0%	$0	20.0%	$1,199	$7,195	$12
1.2	Coal Stackout & Reclaim	$4,777	$0	$1,158	$0	$5,935	8.8%	$520	0%	$0	20.0%	$1,291	$7,746	$13
1.3	Coal Conveyors & Yd Crus	$4,441	$0	$1,146	$0	$5,587	8.8%	$490	0%	$0	20.0%	$1,215	$7,293	$13
1.4	Other Coal Handling	$1,162	$0	$265	$0	$1,427	8.8%	$125	0%	$0	20.0%	$310	$1,862	$3
1.5	Sorbent Receive & Unload	$0	$0	$0	$0	$0	0.0%	$0	0%	$0	0.0%	$0	$0	$0
1.6	Sorbent Stackout & Reclaim	$0	$0	$0	$0	$0	0.0%	$0	0%	$0	0.0%	$0	$0	$0
1.7	Sorbent Conveyors	$0	$0	$0	$0	$0	0.0%	$0	0%	$0	0.0%	$0	$0	$0
1.8	Other Sorbent Handling	$0	$0	$0	$0	$0	0.0%	$0	0%	$0	0.0%	$0	$0	$0
1.9	Coal & Sorbent Hnd.Foundations	$0	$2,616	$6,541	$0	$9,157	9.6%	$878	0%	$0	20.0%	$2,007	$12,041	$21
	SUBTOTAL 1.	**$14,076**	**$2,616**	**$10,916**	**$0**	**$27,608**		**$2,506**		**$0**		**$6,023**	**$36,137**	**$63**
2	COAL PREP & FEED SYSTEMS													
2.1	Coal Crushing & Drying	w/2.3	$0	w2.3	$0	$0	0.0%	0	0%	0	0.0%	$0	$0	$0
2.2	Prepared Coal Storage & Feed	$1,577	$377	$247	$0	$2,202	8.6%	188	0%	0	20.0%	$478	$2,869	$5
2.3	Slurry Prep & Feed	$21,571	$0	$9,520	$0	$31,091	9.1%	2,825	5%	1,555	20.0%	$7,094	$42,564	$74
2.4	Misc. Coal Prep & Feed	$867	$631	$1,893	$0	$3,391	9.2%	312	0%	0	20.0%	$741	$4,443	$8
2.5	Sorbent Prep Equipment	$0	$0	$0	$0	$0	0.0%	0	0%	0	15.0%	$0	$0	$0
2.6	Sorbent Storage & Feed	$0	$0	$0	$0	$0	0.0%	0	0%	0	15.0%	$0	$0	$0
2.7	Sorbent Injection System	$0	$0	$0	$0	$0	0.0%	0	0%	0	0.0%	$0	$0	$0
2.8	Booster Air Supply System	$0	$0	$0	$0	$0	0.0%	0	0%	0	0.0%	$0	$0	$0
2.9	Coal & Sorbent Feed Foundation	$0	$3,372	$2,768	$0	$6,140	9.3%	569	0%	0	20.0%	$1,342	$8,050	$14
	SUBTOTAL 2.	**$24,016**	**$4,380**	**$14,428**	**$0**	**$42,824**		**$3,893**		**$1,555**		**$9,654**	**$57,926**	**$100**
3	FEEDWATER & MISC. BOP SYSTEMS													
3.1	Feedwater System	2,848	4,891	2,582	0	10,321	9.3%	956	0%	0	20.0%	$2,255	$13,533	$23
3.2	Water Makeup & Pretreating	672	70	376	0	1,118	9.5%	106	0%	0	30.0%	$367	$1,592	$3
3.3	Other Feedwater Subsystems	1,558	527	474	0	2,559	9.0%	230	0%	0	20.0%	$558	$3,346	$6
3.4	Service Water Systems	385	792	2,749	0	3,926	9.8%	383	0%	0	30.0%	$1,293	$5,601	$10
3.5	Other Boiler Plant Systems	2,064	800	1,982	0	4,846	9.5%	460	0%	0	20.0%	$1,061	$6,367	$11
3.6	FO Supply Sys & Nat Gas	$314	$592	$552	$0	1,458	9.6%	140	0%	0	20.0%	$320	$1,919	$3
3.7	Waste Treatment Equipment	940	0	573	0	1,513	9.7%	147	0%	0	30.0%	$498	$2,158	$4
3.8	Misc. Power Plant Equipment	$1,115	$149	$573	$0	1,837	9.7%	177	0%	0	30.0%	$604	$2,618	$5
	SUBTOTAL 3.	**$9,896**	**$7,821**	**$9,861**	**$0**	**$27,578**		**$2,601**		**$0**		**$6,956**	**$37,135**	**$64**
4	GASIFIER & ACCESSORIES													
4.1	Syngas Cooler Gasifier System	$112,030	$0	$61,384	$0	$173,415	9.2%	$15,886	13.9%	$24,066	15.3%	$32,716	$246,084	$426
4.2	Syngas Cooler (w/ Gasifier - $)	w/4.1	$0	w/ 4.1	$0	$0	0.0%	$0	0%	$0	0.0%	$0	$0	$0
4.3	ASU/Oxidant Compression	$189,980	$0	w/equip.	$0	$189,980	9.7%	$18,415	0%	$0	10.0%	$20,839	$229,234	$397
4.4	Scrubber & Low Temperature Cooling	5,952	$4,844	$5,042	$0	$15,838	9.6%	$1,521	0%	$0	20.0%	$3,472	$20,831	$36
4.5	Black Water & Sour Gas Section	w/4.1	$0	w/4.1	$0	$0	0.0%	$0	0%	$0	0.0%	$0	$0	$0
4.6	Soot Recovery & SARU	$1,815	$862	$1,704	$0	$4,381	9.6%	$422	0%	$0	20.0%	$961	$5,763	$10
4.7	Major Component Rigging	w/4.1	$0	w/4.1	$0	$0	0.0%	$0	0%	$0	0.0%	$0	$0	$0
4.8	Gasification Foundations	$0	$6,381	$5,327	$0	$11,708	9.3%	$1,085	0%	$0	25.0%	$3,198	$15,991	$28
	SUBTOTAL 4.	**$309,777**	**$12,088**	**$73,457**	**$0**	**$395,322**		**$37,329**		**$24,066**		**$61,187**	**$517,904**	**$897**

Exhibit 4-150 Case 2 D3C (60%) Capital Costs (continued)

		Department:	NETL Office of Systems Analysis and Planning										**Cost Base:**	Jun 2007
		Project:	CO2 Capture Sensitivity Systems Analysis										**Prepared:**	14-Jun-10
		Case:	Case 2 D3C - GEE IGCC w/ two WGS bypass (60% CO2 Capture)											**x $1, 000**
		Plant Size:	577.43	MW, net			Capital Charge Factor	0.1773	Capacity Factor	0.8				
			Equipment	**Material**	**Labor**		**Bare**	**Eng'g CM H.O. &**		**Process Cont.**		**Project Cont.**		**TOTAL PLANT COST**	
Acct No.	**Item/Description**		**Cost**	**Cost**	**Direct**	**Indirect**	**Erected**	**%**	**Total**	**%**	**Total**	**%**	**Total**	**$**	**$/kW**
5A	GAS CLEANUP & PIPING								*						
5A.1	Double Stage Selexol		$64,608	$0	$54,821	$0	$119,429	9.7%	$11,550	20%	$23,886	20.0%	$30,973	$185,838	$322
5A.2	Elemental Sulfur Plant		$10,171	$2,027	$13,123	$0	$25,321	9.7%	$2,460	0%	$0	20.0%	$5,556	$33,337	$58
5A.3	Mercury Removal		$1,235	$0	$940	$0	$2,175	9.7%	$210	5%	$109	20.0%	$499	$2,992	$5
5A.4	Shift Reactors		$7,237	$0	$2,913	$0	$10,150	9.6%	$973	0%	$0	20.0%	$2,225	$13,348	$23
5A.5	COS Hydrolysis		$2,070	$0	$2,703	$0	$4,773	9.7%	$464	0%	$0	20.0%	$1,047	$6,284	$11
5A.6	Particulate Removal		$0	$0	$0	$0	$0	0.0%	$0	0%	$0	10.0%	$0	$0	$0
5A.7	Blowback Gas Systems		$1,328	$0	$252	$0	$1,579	12.2%	$193	0%	$0	20.0%	$354	$2,126	$4
5A.8	Fuel Gas Piping		$0	$620	$434	$0	$1,054	9.3%	$98	0%	$0	20.0%	$230	$1,382	$2
5A.9	HGCU Foundations		$0	$630	$406	$0	$1,037	9.2%	$95	0%	$0	30.0%	$340	$1,472	$3
5A.10	Open		$0	$0	$0	$0	$0	0.0%	$0	0%	$0	0.0%	$0	$0	$0
		SUBTOTAL 5A.	**$86,648**	**$3,277**	**$75,592**	**$0**	**$165,518**		**$16,043**		**$23,995**		**$41,224**	**$246,779**	**$427**
5B	CO2 REMOVAL & COMPRESSION														
5B.1	CO2 Removal System		$0	$0	$0	$0	$0	9.6%	$0	0%	$0	20.0%	$0	$0	$0
5B.2	CO2 Compression & Drying		$12,507	$0	$7,666	$0	$20,173	9.6%	$1,943	0%	$0	20.0%	$4,423	$26,540	$46
5B.3	CO2 Pipeline												0	0	0
5B.4	CO2 Storage												0	0	0
5B.5	CO2 Monitoring												0	0	0
		SUBTOTAL 5B.	**$12,507**	**$0**	**$7,666**	**$0**	**$20,173**		**$1,943**		**$0**		**$4,423**	**$26,540**	**$46**
6	COMBUSTION TURBINE/ACCESSORIES														
6.1	Combustion Turbine Generator		$92,026	$0	$6,583	$0	$98,609	9.5%	9,348	10%	9,861	10.0%	11,782	129,600	224
6.2	Syngas Expander		$5,550	$0	$767	$0	$6,316	9.5%	600	0%	0	15.0%	1,038	7,954	14
6.3	Compressed Air Piping		$0	$0	$0	$0	$0	0.0%	0	0%	0	0.0%	0	0	0
6.4	Combustion Turbine Foundations		$0	$887	$982	$0	$1,868	9.4%	175	0%	0	30.0%	613	2,656	5
		SUBTOTAL 6.	**$97,576**	**$887**	**$8,331**	**$0**	**$106,794**		**$10,123**		**$9,861**		**$13,432**	**$140,210**	**$243**
7	HRSG, DUCTING & STACK														
7.1	Heat Recovery Steam Generator		$34,172	$0	$4,859	$0	$39,031	9.5%	$3,711	0%	$0	10.0%	$4,274	$47,017	$81
7.2	Open		$0	$0	$0	$0	$0	0.0%	$0	0%	$0	0.0%	$0	$0	$0
7.3	Ductwork		$0	$1,721	$1,228	$0	$2,949	8.8%	$259	0%	$0	20.0%	$642	$3,850	$7
7.4	Stack		$3,358	$0	$1,262	$0	$4,620	9.6%	$443	0%	$0	10.0%	$506	$5,568	$10
7.9	HRSG, Duct & Stack Foundations		$0	$673	$646	$0	$1,319	9.3%	$123	0%	$0	30.0%	$433	$1,874	$3
		SUBTOTAL 7.	**$37,530**	**$2,394**	**$7,995**	**$0**	**$47,919**		**$4,535**		**$0**		**$5,855**	**$58,309**	**$101**
8	STEAM TURBINE GENERATOR														
8.1	Steam TG & Accessories		$28,939	$0	$4,947	$0	$33,887	9.6%	$3,251	0%	$0	10.0%	$3,714	$40,852	$71
8.2	Turbine Plant Auxiliaries		$201	$0	$460	$0	$661	9.8%	$65	0%	$0	10.0%	$73	$798	$1
8.3	Condenser & Auxiliaries		$5,178	$0	$1,520	$0	$6,699	9.6%	$640	0%	$0	10.0%	$734	$8,073	$14
8.4	Steam Piping		$5,029	$0	$3,537	$0	$8,566	8.6%	$736	0%	$0	25.0%	$2,325	$11,627	$20
8.9	TG Foundations		$0	$995	$1,682	$0	$2,677	9.5%	$254	0%	$0	30.0%	$879	$3,810	$7
		SUBTOTAL 8.	**$39,347**	**$995**	**$12,147**	**$0**	**$52,489**		**$4,946**		**$0**		**$7,725**	**$65,160**	**$113**
9	COOLING WATER SYSTEM														
9.1	Cooling Towers		$6,950	$0	$1,264	$0	$8,214	9.5%	$782	0%	$0	15.0%	$1,349	$10,346	$18
9.2	Circulating Water Pumps		$1,800	$0	$130	$0	$1,931	8.4%	$163	0%	$0	15.0%	$314	$2,408	$4
9.3	Circ. Water System Auxiliaries		$151	$0	$22	$0	$173	9.5%	$16	0%	$0	15.0%	$28	$218	$0
9.4	Circ. Water Piping		$0	$6,320	$1,639	$0	$7,959	9.0%	$719	0%	$0	20.0%	$1,736	$10,414	$18
9.5	Make-up Water System		$367	$0	$525	$0	$892	9.6%	$86	0%	$0	20.0%	$196	$1,174	$2
9.6	Component Cooling Water System		$746	$892	$635	$0	$2,273	9.4%	$213	0%	$0	20.0%	$497	$2,984	$5
9.9	Circ. Water System Foundations		$0	$2,320	$3,944	$0	$6,264	9.5%	$594	0%	$0	30.0%	$2,057	$8,915	$15
		SUBTOTAL 9.	**$10,015**	**$9,533**	**$8,159**	**$0**	**$27,706**		**$2,573**		**$0**		**$6,178**	**$36,458**	**$63**

Exhibit 4-150 Case 2 D3C (60%) Capital Costs (continued)

		Department:	NETL Office of Systems Analysis and Planning									**Cost Base:**	Jun 2007	
		Project:	CO2 Capture Sensitivity Systems Analysis									**Prepared:**	14-Jun-10	
		Case:	Case 2 D3C - GEE IGCC w/ two WGS bypass (60% CO2 Capture)										**x $1, 000**	
		Plant Size:	577.43	MW, net			Capital Charge Factor	0.1773		Capacity Factor	0.8			
			Equipment	**Material**	**Labor**		**Bare**	**Eng'g CM H.O. &**		**Process Cont.**		**Project Cont.**	**TOTAL PLANT COST**	
Acct No.		**Item/Description**	**Cost**	**Cost**	**Direct**	**Indirect**	**Erected**	**%**	**Total**	**%**	**Total**	**%**	**Total**	**$**	**$/kW**
10		ASH/SPENT SORBENT HANDLING SYS													
	10.1	Slag Dewatering & Cooling	$11,963	$6,597	$13,401	$0	$31,961	9.7%	$3,085	0%	$0	10.0%	$3,505	$38,551	$67
	10.2	Gasifier Ash Depressurization	w/10.1	w/10.1	w/10.1	$0	$0	0.0%	$0	0%	$0	0.0%	$0	$0	$0
	10.3	Cleanup Ash Depressurization	w/10.1	w/10.1	w/10.1	$0	$0	0.0%	$0	0%	$0	0.0%	$0	$0	$0
	10.4	High Temperature Ash Piping	$0	$0	$0	$0	$0	0.0%	$0	0%	$0	0.0%	$0	$0	$0
	10.5	Other Ash Recovery Equipment	$0	$0	$0	$0	$0	0.0%	$0	0%	$0	0.0%	$0	$0	$0
	10.6	Ash Storage Silos	$581	$0	$632	$0	$1,213	9.7%	$118	0%	$0	15.0%	$200	$1,531	$3
	10.7	Ash Transport & Feed Equipment	$779	$0	$188	$0	$967	9.3%	$90	0%	$0	15.0%	$159	$1,216	$2
	10.8	Misc. Ash Handling Equipment	$1,204	$1,475	$441	$0	$3,119	9.5%	$297	0%	$0	15.0%	$512	$3,928	$7
	10.9	Ash/Spent Sorbent Foundation	$0	$51	$65	$0	$116	9.4%	$11	0%	$0	30.0%	$38	$165	$0
		SUBTOTAL 10.	**$14,527**	**$8,123**	**$14,727**	**$0**	**$37,377**		**$3,600**		**$0**		**$4,413**	**$45,391**	**$79**
11		ACCESSORY ELECTRIC PLANT													
	11.1	Generator Equipment	$956	$0	$945	$0	$1,901	9.5%	$182	0%	$0	10.0%	$208	$2,291	$4
	11.2	Station Service Equipment	$4,432	$0	$399	$0	$4,832	9.2%	$445	0%	$0	10.0%	$528	$5,805	$10
	11.3	Switchgear & Motor Control	$8,194	$0	$1,490	$0	$9,684	9.3%	$898	0%	$0	15.0%	$1,587	$12,170	$21
	11.4	Conduit & Cable Tray	$0	$3,806	$12,557	$0	$16,363	9.7%	$1,583	0%	$0	25.0%	$4,487	$22,433	$39
	11.5	Wire & Cable	$0	$7,273	$4,779	$0	$12,051	7.3%	$875	0%	$0	25.0%	$3,232	$16,158	$28
	11.6	Protective Equipment	$0	$686	$2,496	$0	$3,182	9.8%	$311	0%	$0	15.0%	$524	$4,016	$7
	11.7	Standby Equipment	$235	$0	$230	$0	$465	9.5%	$44	0%	$0	15.0%	$76	$586	$1
	11.8	Main Power Transformers	$17,677	$0	$145	$0	$17,822	7.6%	$1,348	0%	$0	15.0%	$2,876	$22,046	$38
	11.9	Electrical Foundations	$0	$158	$415	$0	$573	9.6%	$55	0%	$0	30.0%	$188	$816	$1
		SUBTOTAL 11.	**$31,494**	**$11,923**	**$23,456**	**$0**	**$66,874**		**$5,741**		**$0**		**$13,706**	**$86,321**	**$149**
12		INSTRUMENTATION & CONTROL													
	12.1	IGCC Control Equipment	w/4.1	$0	w/4.1	$0	$0	0.0%	$0	0%	$0	0.0%	$0	$0	$0
	12.2	Combustion Turbine Control	w/6.1	$0	w/6.1	$0	$0	0.0%	$0	0%	$0	0.0%	$0	$0	$0
	12.3	Steam Turbine Control	w/8.1	$0	w/8.1	$0	$0	0.0%	$0	0%	$0	0.0%	$0	$0	$0
	12.4	Other Major Component Control	$1,087	$0	$726	$0	$1,813	9.5%	$172	5%	$91	15.0%	$311	$2,386	$4
	12.5	Signal Processing Equipment	w/12.7	$0	w/12.7	$0	$0	0.0%	$0	0%	$0	0.0%	$0	$0	$0
	12.6	Control Boards,Panels & Racks	$250	$0	$160	$0	$410	9.5%	$39	5%	$21	20.0%	$94	$563	$1
	12.7	Computer & Accessories	$5,799	$0	$186	$0	$5,985	9.2%	$549	5%	$299	10.0%	$683	$7,516	$13
	12.8	Instrument Wiring & Tubing	$0	$2,026	$4,141	$0	$6,167	8.5%	$523	5%	$308	25.0%	$1,750	$8,748	$15
	12.9	Other I & C Equipment	$3,876	$0	$1,882	$0	$5,759	9.4%	$542	5%	$288	15.0%	$988	$7,577	$13
		SUBTOTAL 12.	**$11,012**	**$2,026**	**$7,095**	**$0**	**$20,133**		**$1,825**		**$1,007**		**$3,826**	**$26,791**	**$46**
13		IMPROVEMENTS TO SITE													
	13.1	Site Preparation	0	109	2,321	0	2,430	9.9%	241	0%	0	30.0%	801	3,472	6
	13.2	Site Improvements	0	1,931	2,567	0	4,498	9.9%	444	0%	0	30.0%	1,483	6,424	11
	13.3	Site Facilities	3,461	0	3,652	0	7,113	9.9%	701	0%	0	30.0%	2,344	10,159	18
		SUBTOTAL 13.	**$3,461**	**$2,040**	**$8,540**	**$0**	**$14,041**		**$1,386**		**$0**		**$4,628**	**$20,055**	**$35**

Exhibit 4-150 Case 2 D3C (60%) Capital Costs (continued)

Department:	NETL Office of Systems Analysis and Planning			**Cost Base:**	Jun 2007
Project:	CO2 Capture Sensitivity Systems Analysis			**Prepared:**	27-May-11
Case:	Case 2 D3C - GEE IGCC w/ two WGS bypass (60% CO2 Capture)				**x $1, 000**
Plant Size:	577.43 MW, net	Capital Charge Factor	0.1773	Capacity Factor	0.8

Acct No.	Item/Description	Equipment Cost	Material Cost	Labor Direct	Labor Indirect	Bare Erected	Eng'g CM H.O. & %	Eng'g CM H.O. & Total	Process Cont. %	Process Cont. Total	Project Cont. %	Project Cont. Total	TOTAL PLANT COST $	TOTAL PLANT COST $/kW
14	BUILDINGS & STRUCTURES													
14.1	Combustion Turbine Area	$0	$264	$149	$0	$414	8.8%	$36	0%	$0	20.0%	$90	$540	$1
14.2	Steam Turbine Building	$0	$2,371	$3,377	$0	$5,748	9.2%	$529	0%	$0	15.0%	$941	$7,218	$13
14.3	Administration Building	$0	$879	$638	$0	$1,517	8.9%	$135	0%	$0	15.0%	$248	$1,900	$3
14.4	Circulation Water Pumphouse	$0	$161	$86	$0	$247	8.8%	$22	0%	$0	15.0%	$40	$309	$1
14.5	Water Treatment Buildings	$0	$564	$551	$0	$1,115	9.0%	$101	0%	$0	15.0%	$182	$1,398	$2
14.6	Machine Shop	$0	$450	$308	$0	$758	8.9%	$67	0%	$0	15.0%	$124	$949	$2
14.7	Warehouse	$0	$726	$469	$0	$1,195	8.9%	$106	0%	$0	15.0%	$195	$1,496	$3
14.8	Other Buildings & Structures	$0	$435	$339	$0	$774	8.9%	$69	0%	$0	20.0%	$169	$1,012	$2
14.9	Waste Treating Building & Str.	$0	$970	$1,853	$0	$2,823	9.3%	$263	0%	$0	20.0%	$617	$3,704	$6
	SUBTOTAL 14.	**$0**	**$6,821**	**$7,770**	**$0**	**$14,590**		**$1,328**		**$0**		**$2,607**	**$18,525**	**$32**
	Total Cost	**$701,883**	**$74,924**	**$290,140**	**$0**	**$1,066,947**		**$100,373**		**$60,483**		**$191,838**	**$1,419,640**	**$2,459**

Owner's Costs			
Preproduction Costs			
6 Months All Labor		$13,167	$23
1 Month Maintenance Materials		$2,897	$5
1 Month Non-fuel Consumables		$342	$1
1 Month Waste Disposal		$311	$1
25% of 1 Months Fuel Cost at 100% CF		$1,658	$3
2% of TPC		$28,393	$49
Total		$46,768	$81
Inventory Capital			
60 day supply of fuel and consumables at 100% CF		$13,949	$24
0.5% of TPC (spare parts)		$7,098	$12
Total		$21,047	$36
Initial Cost for Catalyst and Chemicals		$6,559	$11
Land		$900	$2
Other Owner's Costs		$212,946	$369
Financing Costs		$38,330	$66
Total Overnight Costs (TOC)		**$1,746,192**	**$3,024**
TASC Multiplier	(IOU, high risk, 35 year)	1.140	
Total As-Spent Cost (TASC)		**$1,990,658**	**$3,447**

Exhibit 4-151 Case 2 D3C Initial and Annual O&M Expenses

INITIAL & ANNUAL O&M EXPENSES			
Case:	Case 2 D3C - GEE IGCC w/ two WGS bypass (60% CO2 Capture)		
Plant Size (MWe):	577.43	**Heat Rate (Btu/kWh):**	9,614
Primary/Secondary Fuel:	Illinois #6 Bituminous Coal	**Fuel Cost ($/MM Btu):**	1.64
Design/Construction	5 years	**Book Life (yrs):**	30
TPC (Plant Cost) Year:	Jun 2007	**TPI Year:**	2015
Capacity Factor (%):	80	**CO_2 Captured (TPD):**	7,796

OPERATING & MAINTENANCE LABOR

Operating Labor

Operating Labor Rate (base):	$34.65	$/hour
Operating Labor Burden:	30.00	% of base
Labor Overhead Charge:	25.00	% of labor

Operating Labor Requirements per Shift:	units/mod.	Total Plant
Skilled Operator	2.0	2.0
Operator	10.0	10.0
Foreman	1.0	1.0
Lab Tech's etc.	3.0	3.0
TOTAL Operating Jobs	16.0	16.0

	Annual Costs $	Annual Costs $/kW-net
Annual Operating Labor Cost (calc'd)	$6,313,507	$10.934
Maintenance Labor Cost (calc'd)	$14,754,262	$25.552
Administrative & Support Labor (calc'd)	$5,266,942	$9.121
Property Taxes & Insurance	$28,392,808	$49.171
TOTAL FIXED OPERATING COSTS	**$54,727,519**	**$94.778**

VARIABLE OPERATING COSTS

	$	$/kWh-net
Maintenance Material Costs (calc'd)	**$27,813,813**	**0.00687**

Consumables	Consumption Initial	Consumption /Day	Unit Cost	Initial Cost	$	$/kWh-net
Water (/1000 gallons)	0	3,821	1.08	$0	$1,206,873	0.00030
Chemicals						
MU & WT Chem. (lbs)	0	22,765	0.17	$0	$1,150,432	0.00028
Carbon (Mercury Removal) (lb)	68,360	117	1.05	$71,790	$35,878	0.00001
COS Catalyst (m3)	193	0.13	2,397.36	$463,410	$92,682	0.00002
Water Gas Shift Catalyst (ft3)	4,176	2.86	498.83	$2,083,118	$416,624	0.00010
Selexol Solution (gal)	294,129	78	13.40	$3,940,815	$306,332	0.00008
SCR Catalyst (m3)	0	0	0.00	$0	$0	0.00000
Ammonia (19% NH3) (ton)	0	0	0.00	$0	$0	0.00000
Claus Catalyst (ft3)	0	1.97	131.27	$0	$75,459	0.00002
Subtotal Chemicals				**$6,559,132**	**$2,077,406**	**0.00051**
Other						
Supplemental Fuel (MMBtu)	0	0	0.00	$0	$0	0.00000
Gases, N2 etc. (/100scf)	0	0	0.00	$0	$0	0.00000
L.P. Steam (/1000 pounds)	0	0	0.00	$0	$0	0.00000
Subtotal Other				**$0**	**$0**	**0.00000**
Waste Disposal						
Spent Mercury Sorbent (lb)	0	117	0.42	$0	$14,349	0.00000
Flyash (ton)	0	0	0.00	$0	$0	0.00000
Slag (ton)	0	627	16.23	$0	$2,968,345	0.00073
Subtotal Solid Waste Disposal				**$0**	**$2,982,694**	**$0**
By-products & Emissions						
Sulfur (tons)	0	143	0.00	$0	$0	0.00000
Subtotal By-Products				**$0**	**$0**	**$0**
TOTAL VARIABLE OPERATING COSTS					**$34,080,786**	**0.00842**
Coal FUEL (tons)	**0**	**5,710**	**38.19**	**$0**	**$63,671,371**	**0.01573**

Exhibit 4-152 Case 2 D3D (75%) Capital Costs

Department:	NETL Office of Systems Analysis and Planning		**Cost Base:**	Jun 2007
Project:	CO2 Capture Sensitivity Systems Analysis		**Prepared:**	14-Jun-10
Case:	Case 2 D3D - GEE IGCC w/ two WGS bypass (75% CO2 Capture)			**x $1, 000**
Plant Size:	563.80 MW, net	Capital Charge Factor 0.1773	Capacity Factor 0.8	

Acct No.	Item/Description	Equipment Cost	Material Cost	Labor Direct	Labor Indirect	Bare Erected	Eng'g CM H.O. & %	Eng'g CM H.O. & Total	Process Cont. %	Process Cont. Total	Project Cont. %	Project Cont. Total	TOTAL PLANT COST $	TOTAL PLANT COST $/kW
1	COAL HANDLING SYSTEM													
1.1	Coal Receive & Unload	$3,725	$0	$1,820	$0	$5,545	9.0%	$497	0%	$0	20.0%	$1,208	$7,250	$13
1.2	Coal Stackout & Reclaim	$4,813	$0	$1,167	$0	$5,980	8.8%	$524	0%	$0	20.0%	$1,301	$7,805	$14
1.3	Coal Conveyors & Yd Crus	$4,475	$0	$1,155	$0	$5,630	8.8%	$494	0%	$0	20.0%	$1,225	$7,349	$13
1.4	Other Coal Handling	$1,171	$0	$267	$0	$1,438	8.8%	$126	0%	$0	20.0%	$313	$1,877	$3
1.5	Sorbent Receive & Unload	$0	$0	$0	$0	$0	0.0%	$0	0%	$0	0.0%	$0	$0	$0
1.6	Sorbent Stackout & Reclaim	$0	$0	$0	$0	$0	0.0%	$0	0%	$0	0.0%	$0	$0	$0
1.7	Sorbent Conveyors	$0	$0	$0	$0	$0	0.0%	$0	0%	$0	0.0%	$0	$0	$0
1.8	Other Sorbent Handling	$0	$0	$0	$0	$0	0.0%	$0	0%	$0	0.0%	$0	$0	$0
1.9	Coal & Sorbent Hnd.Foundations	$0	$2,636	$6,591	$0	$9,227	9.6%	$884	0%	$0	20.0%	$2,022	$12,134	$22
	SUBTOTAL 1.	**$14,184**	**$2,636**	**$11,000**	**$0**	**$27,820**		**$2,525**		**$0**		**$6,069**	**$36,415**	**$65**
2	COAL PREP & FEED SYSTEMS													
2.1	Coal Crushing & Drying	w/2.3	$0	w2.3	$0	$0	0.0%	0	0%	0	0.0%	$0	$0	$0
2.2	Prepared Coal Storage & Feed	$1,590	$381	$249	$0	$2,220	8.6%	190	0%	0	20.0%	$482	$2,892	$5
2.3	Slurry Prep & Feed	$21,750	$0	$9,598	$0	$31,348	9.1%	2,848	5%	1,567	20.0%	$7,153	$42,916	$76
2.4	Misc. Coal Prep & Feed	$874	$636	$1,908	$0	$3,419	9.2%	314	0%	0	20.0%	$747	$4,480	$8
2.5	Sorbent Prep Equipment	$0	$0	$0	$0	$0	0.0%	0	0%	0	15.0%	$0	$0	$0
2.6	Sorbent Storage & Feed	$0	$0	$0	$0	$0	0.0%	0	0%	0	15.0%	$0	$0	$0
2.7	Sorbent Injection System	$0	$0	$0	$0	$0	0.0%	0	0%	0	0.0%	$0	$0	$0
2.8	Booster Air Supply System	$0	$0	$0	$0	$0	0.0%	0	0%	0	0.0%	$0	$0	$0
2.9	Coal & Sorbent Feed Foundation	$0	$3,399	$2,791	$0	$6,190	9.3%	573	0%	0	20.0%	$1,353	$8,116	$14
	SUBTOTAL 2.	**$24,215**	**$4,416**	**$14,546**	**$0**	**$43,177**		**$3,925**		**$1,567**		**$9,734**	**$58,404**	**$104**
3	FEEDWATER & MISC. BOP SYSTEMS													
3.1	Feedwater System	2,832	4,863	2,567	0	10,262	9.3%	951	0%	0	20.0%	$2,243	$13,456	$24
3.2	Water Makeup & Pretreating	696	73	389	0	1,157	9.5%	110	0%	0	30.0%	$380	$1,647	$3
3.3	Other Feedwater Subsystems	1,549	524	471	0	2,544	9.0%	229	0%	0	20.0%	$555	$3,327	$6
3.4	Service Water Systems	398	820	2,845	0	4,062	9.8%	396	0%	0	30.0%	$1,338	$5,796	$10
3.5	Other Boiler Plant Systems	2,136	828	2,051	0	5,015	9.5%	476	0%	0	20.0%	$1,098	$6,589	$12
3.6	FO Supply Sys & Nat Gas	$315	$594	$554	$0	1,463	9.6%	141	0%	0	20.0%	$321	$1,925	$3
3.7	Waste Treatment Equipment	972	0	593	0	1,565	9.7%	152	0%	0	30.0%	$515	$2,233	$4
3.8	Misc. Power Plant Equipment	$1,118	$150	$574	$0	1,842	9.7%	178	0%	0	30.0%	$606	$2,626	$5
	SUBTOTAL 3.	**$10,016**	**$7,851**	**$10,045**	**$0**	**$27,912**		**$2,633**		**$0**		**$7,055**	**$37,600**	**$67**
4	GASIFIER & ACCESSORIES													
4.1	Syngas Cooler Gasifier System	$113,003	$0	$61,917	$0	$174,920	9.2%	$16,024	13.9%	$24,275	15.3%	$33,000	$248,220	$440
4.2	Syngas Cooler (w/ Gasifier - $)	w/4.1	$0	w/ 4.1	$0	$0	0.0%	$0	0%	$0	0.0%	$0	$0	$0
4.3	ASU/Oxidant Compression	$191,589	$0	w/equip.	$0	$191,589	9.7%	$18,571	0%	$0	10.0%	$21,016	$231,175	$410
4.4	Scrubber & Low Temperature Cooling	6,004	$4,886	$5,086	$0	$15,976	9.6%	$1,534	0%	$0	20.0%	$3,502	$21,012	$37
4.5	Black Water & Sour Gas Section	w/4.1	$0	w/4.1	$0	$0	0.0%	$0	0%	$0	0.0%	$0	$0	$0
4.6	Soot Recovery & SARU	$1,831	$869	$1,718	$0	$4,419	9.6%	$426	0%	$0	20.0%	$969	$5,813	$10
4.7	Major Component Rigging	w/4.1	$0	w/4.1	$0	$0	0.0%	$0	0%	$0	0.0%	$0	$0	$0
4.8	Gasification Foundations	$0	$6,437	$5,373	$0	$11,810	9.3%	$1,094	0%	$0	25.0%	$3,226	$16,130	$29
	SUBTOTAL 4.	**$312,426**	**$12,192**	**$74,095**	**$0**	**$398,713**		**$37,649**		**$24,275**		**$61,713**	**$522,350**	**$926**

Exhibit 4-152 Case 2 D3D (75%) Capital Costs (continued)

Department:	NETL Office of Systems Analysis and Planning			**Cost Base:**	Jun 2007
Project:	CO2 Capture Sensitivity Systems Analysis			**Prepared:**	14-Jun-10
Case:	Case 2 D3D - GEE IGCC w/ two WGS bypass (75% CO2 Capture)				**x $1, 000**
Plant Size:	563.80 MW, net	Capital Charge Factor 0.1773	Capacity Factor 0.8		

Acct No.	Item/Description	Equipment Cost	Material Cost	Labor Direct	Labor Indirect	Bare Erected	Eng'g CM H.O. & %	Eng'g CM H.O. & Total	Process Cont. %	Process Cont. Total	Project Cont. %	Project Cont. Total	TOTAL PLANT COST $	TOTAL PLANT COST $/kW
5A	GAS CLEANUP & PIPING							*						
5A.1	Double Stage Selexol	$68,896	$0	$58,460	$0	$127,356	9.7%	$12,317	20%	$25,471	20.0%	$33,029	$198,173	$351
5A.2	Elemental Sulfur Plant	$10,254	$2,044	$13,230	$0	$25,527	9.7%	$2,480	0%	$0	20.0%	$5,601	$33,608	$60
5A.3	Mercury Removal	$1,309	$0	$996	$0	$2,305	9.7%	$223	5%	$115	20.0%	$529	$3,172	$6
5A.4	Shift Reactors	$9,410	$0	$3,788	$0	$13,198	9.6%	$1,265	0%	$0	20.0%	$2,893	$17,356	$31
5A.5	COS Hydrolysis	$1,225	$0	$1,600	$0	$2,825	9.7%	$275	0%	$0	20.0%	$620	$3,720	$7
5A.6	Particulate Removal	$0	$0	$0	$0	$0	0.0%	$0	0%	$0	10.0%	$0	$0	$0
5A.7	Blowback Gas Systems	$1,339	$0	$254	$0	$1,593	12.2%	$194	0%	$0	20.0%	$357	$2,145	$4
5A.8	Fuel Gas Piping	$0	$630	$441	$0	$1,071	9.3%	$99	0%	$0	20.0%	$234	$1,404	$2
5A.9	HGCU Foundations	$0	$636	$410	$0	$1,047	9.2%	$96	0%	$0	30.0%	$343	$1,486	$3
5A.10	Open	$0	$0	$0	$0	$0	0.0%	$0	0%	$0	0.0%	$0	$0	$0
	SUBTOTAL 5A.	**$92,433**	**$3,310**	**$79,179**	**$0**	**$174,922**		**$16,949**		**$25,586**		**$43,606**	**$261,063**	**$463**
5B	CO2 REMOVAL & COMPRESSION													
5B.1	CO2 Removal System	$0	$0	$0	$0	$0	9.6%	$0	0%	$0	20.0%	$0	$0	$0
5B.2	CO2 Compression & Drying	$15,364	$0	$9,418	$0	$24,782	9.6%	$2,387	0%	$0	20.0%	$5,434	$32,603	$58
5B.3	CO2 Pipeline											0	0	0
5B.4	CO2 Storage											0	0	0
5B.5	CO2 Monitoring											0	0	0
	SUBTOTAL 5B.	**$15,364**	**$0**	**$9,418**	**$0**	**$24,782**		**$2,387**		**$0**		**$5,434**	**$32,603**	**$58**
6	COMBUSTION TURBINE/ACCESSORIES													
6.1	Combustion Turbine Generator	$92,026	$0	$6,583	$0	$98,609	9.5%	9,348	10%	9,861	10.0%	11,782	129,600	230
6.2	Syngas Expander	$5,550	$0	$767	$0	$6,316	9.5%	600	0%	0	15.0%	1,038	7,954	14
6.3	Compressed Air Piping	$0	$0	$0	$0	$0	0.0%	0	0%	0	0.0%	0	0	0
6.4	Combustion Turbine Foundations	$0	$887	$982	$0	$1,868	9.4%	175	0%	0	30.0%	613	2,656	5
	SUBTOTAL 6.	**$97,576**	**$887**	**$8,331**	**$0**	**$106,794**		**$10,123**		**$9,861**		**$13,432**	**$140,210**	**$249**
7	HRSG, DUCTING & STACK													
7.1	Heat Recovery Steam Generator	$33,910	$0	$4,822	$0	$38,732	9.5%	$3,683	0%	$0	10.0%	$4,241	$46,656	$83
7.2	Open	$0	$0	$0	$0	$0	0.0%	$0	0%	$0	0.0%	$0	$0	$0
7.3	Ductwork	$0	$1,726	$1,231	$0	$2,957	8.8%	$259	0%	$0	20.0%	$643	$3,860	$7
7.4	Stack	$3,367	$0	$1,265	$0	$4,632	9.6%	$444	0%	$0	10.0%	$508	$5,583	$10
7.9	HRSG, Duct & Stack Foundations	$0	$675	$648	$0	$1,322	9.3%	$123	0%	$0	30.0%	$434	$1,879	$3
	SUBTOTAL 7.	**$37,277**	**$2,401**	**$7,966**	**$0**	**$47,643**		**$4,509**		**$0**		**$5,826**	**$57,978**	**$103**
8	STEAM TURBINE GENERATOR													
8.1	Steam TG & Accessories	$28,728	$0	$4,911	$0	$33,640	9.6%	$3,228	0%	$0	10.0%	$3,687	$40,554	$72
8.2	Turbine Plant Auxiliaries	$199	$0	$457	$0	$656	9.8%	$64	0%	$0	10.0%	$72	$792	$1
8.3	Condenser & Auxiliaries	$5,130	$0	$1,506	$0	$6,636	9.6%	$634	0%	$0	10.0%	$727	$7,998	$14
8.4	Steam Piping	$5,000	$0	$3,517	$0	$8,517	8.6%	$732	0%	$0	25.0%	$2,312	$11,560	$21
8.9	TG Foundations	$0	$988	$1,670	$0	$2,658	9.5%	$252	0%	$0	30.0%	$873	$3,783	$7
	SUBTOTAL 8.	**$39,057**	**$988**	**$12,061**	**$0**	**$52,106**		**$4,910**		**$0**		**$7,671**	**$64,687**	**$115**
9	COOLING WATER SYSTEM													
9.1	Cooling Towers	$7,053	$0	$1,283	$0	$8,336	9.5%	$794	0%	$0	15.0%	$1,369	$10,499	$19
9.2	Circulating Water Pumps	$1,834	$0	$132	$0	$1,966	8.4%	$166	0%	$0	15.0%	$320	$2,452	$4
9.3	Circ. Water System Auxiliaries	$154	$0	$22	$0	$176	9.5%	$17	0%	$0	15.0%	$29	$221	$0
9.4	Circ. Water Piping	$0	$6,417	$1,664	$0	$8,081	9.0%	$730	0%	$0	20.0%	$1,762	$10,573	$19
9.5	Make-up Water System	$378	$0	$540	$0	$919	9.6%	$88	0%	$0	20.0%	$201	$1,208	$2
9.6	Component Cooling Water System	$758	$906	$645	$0	$2,308	9.4%	$216	0%	$0	20.0%	$505	$3,029	$5
9.9	Circ. Water System Foundations	$0	$2,356	$4,004	$0	$6,360	9.5%	$603	0%	$0	30.0%	$2,089	$9,052	$16
	SUBTOTAL 9.	**$10,176**	**$9,679**	**$8,291**	**$0**	**$28,145**		**$2,614**		**$0**		**$6,275**	**$37,035**	**$66**

Exhibit 4-152 Case 2 D3D (75%) Capital Costs (continued)

		Department:	NETL Office of Systems Analysis and Planning									**Cost Base:**	Jun 2007	
		Project:	CO2 Capture Sensitivity Systems Analysis									**Prepared:**	14-Jun-10	
		Case:	Case 2 D3D - GEE IGCC w/ two WGS bypass (75% CO2 Capture)										**x $1, 000**	
		Plant Size:	563.80	MW, net			Capital Charge Factor	0.1773		Capacity Factor	0.8			
			Equipment	**Material**	**Labor**		**Bare**	**Eng'g CM H.O. &**		**Process Cont.**		**Project Cont.**	**TOTAL PLANT COST**	
Acct No.		**Item/Description**	**Cost**	**Cost**	**Direct**	**Indirect**	**Erected**	**%**	**Total**	**%**	**Total**	**%**	**Total**	**$**	**$/kW**
10		ASH/SPENT SORBENT HANDLING SYS													
	10.1	Slag Dewatering & Cooling	$12,055	$6,647	$13,504	$0	$32,207	9.7%	$3,108	0%	$0	10.0%	$3,532	$38,847	$69
	10.2	Gasifier Ash Depressurization	w/10.1	w/10.1	w/10.1	$0	$0	0.0%	$0	0%	$0	0.0%	$0	$0	$0
	10.3	Cleanup Ash Depressurization	w/10.1	w/10.1	w/10.1	$0	$0	0.0%	$0	0%	$0	0.0%	$0	$0	$0
	10.4	High Temperature Ash Piping	$0	$0	$0	$0	$0	0.0%	$0	0%	$0	0.0%	$0	$0	$0
	10.5	Other Ash Recovery Equipment	$0	$0	$0	$0	$0	0.0%	$0	0%	$0	0.0%	$0	$0	$0
	10.6	Ash Storage Silos	$585	$0	$637	$0	$1,222	9.7%	$119	0%	$0	15.0%	$201	$1,541	$3
	10.7	Ash Transport & Feed Equipment	$785	$0	$189	$0	$974	9.3%	$91	0%	$0	15.0%	$160	$1,225	$2
	10.8	Misc. Ash Handling Equipment	$1,212	$1,485	$444	$0	$3,141	9.5%	$299	0%	$0	15.0%	$516	$3,956	$7
	10.9	Ash/Spent Sorbent Foundation	$0	$52	$65	$0	$117	9.4%	$11	0%	$0	30.0%	$38	$166	$0
		SUBTOTAL 10.	**$14,637**	**$8,184**	**$14,839**	**$0**	**$37,660**		**$3,628**		**$0**		**$4,447**	**$45,734**	**$81**
11		ACCESSORY ELECTRIC PLANT													
	11.1	Generator Equipment	$954	$0	$943	$0	$1,897	9.5%	$181	0%	$0	10.0%	$208	$2,286	$4
	11.2	Station Service Equipment	$4,557	$0	$411	$0	$4,967	9.2%	$458	0%	$0	10.0%	$543	$5,968	$11
	11.3	Switchgear & Motor Control	$8,424	$0	$1,532	$0	$9,956	9.3%	$923	0%	$0	15.0%	$1,632	$12,511	$22
	11.4	Conduit & Cable Tray	$0	$3,913	$12,910	$0	$16,823	9.7%	$1,627	0%	$0	25.0%	$4,612	$23,062	$41
	11.5	Wire & Cable	$0	$7,477	$4,913	$0	$12,390	7.3%	$900	0%	$0	25.0%	$3,322	$16,612	$29
	11.6	Protective Equipment	$0	$686	$2,496	$0	$3,182	9.8%	$311	0%	$0	15.0%	$524	$4,016	$7
	11.7	Standby Equipment	$235	$0	$229	$0	$464	9.5%	$44	0%	$0	15.0%	$76	$585	$1
	11.8	Main Power Transformers	$17,631	$0	$145	$0	$17,776	7.6%	$1,344	0%	$0	15.0%	$2,868	$21,989	$39
	11.9	Electrical Foundations	$0	$158	$414	$0	$571	9.6%	$55	0%	$0	30.0%	$188	$814	$1
		SUBTOTAL 11.	**$31,800**	**$12,234**	**$23,992**	**$0**	**$68,026**		**$5,844**		**$0**		**$13,973**	**$87,842**	**$156**
12		INSTRUMENTATION & CONTROL													
	12.1	IGCC Control Equipment	w/4.1	$0	w/4.1	$0	$0	0.0%	$0	0%	$0	0.0%	$0	$0	$0
	12.2	Combustion Turbine Control	w/6.1	$0	w/6.1	$0	$0	0.0%	$0	0%	$0	0.0%	$0	$0	$0
	12.3	Steam Turbine Control	w/8.1	$0	w/8.1	$0	$0	0.0%	$0	0%	$0	0.0%	$0	$0	$0
	12.4	Other Major Component Control	$1,105	$0	$738	$0	$1,843	9.5%	$175	5%	$92	15.0%	$317	$2,427	$4
	12.5	Signal Processing Equipment	w/12.7	$0	w/12.7	$0	$0	0.0%	$0	0%	$0	0.0%	$0	$0	$0
	12.6	Control Boards,Panels & Racks	$254	$0	$163	$0	$417	9.5%	$39	5%	$21	20.0%	$95	$573	$1
	12.7	Computer & Accessories	$5,896	$0	$189	$0	$6,085	9.2%	$559	5%	$304	10.0%	$695	$7,642	$14
	12.8	Instrument Wiring & Tubing	$0	$2,060	$4,211	$0	$6,271	8.5%	$532	5%	$314	25.0%	$1,779	$8,895	$16
	12.9	Other I & C Equipment	$3,941	$0	$1,914	$0	$5,855	9.4%	$551	5%	$293	15.0%	$1,005	$7,704	$14
		SUBTOTAL 12.	**$11,197**	**$2,060**	**$7,214**	**$0**	**$20,471**		**$1,855**		**$1,024**		**$3,891**	**$27,240**	**$48**
13		IMPROVEMENTS TO SITE													
	13.1	Site Preparation	0	109	2,330	0	2,439	9.9%	242	0%	0	30.0%	804	3,485	6
	13.2	Site Improvements	0	1,939	2,576	0	4,515	9.9%	445	0%	0	30.0%	1,488	6,449	11
	13.3	Site Facilities	3,474	0	3,666	0	7,140	9.9%	704	0%	0	30.0%	2,353	10,197	18
		SUBTOTAL 13.	**$3,474**	**$2,048**	**$8,572**	**$0**	**$14,095**		**$1,391**		**$0**		**$4,646**	**$20,132**	**$36**

Exhibit 4-152 Case 2 D3D (75%) Capital Costs (continued)

Department:	NETL Office of Systems Analysis and Planning			**Cost Base:**	Jun 2007
Project:	CO2 Capture Sensitivity Systems Analysis			**Prepared:**	27-May-11
Case:	Case 2 D3D - GEE IGCC w/ two WGS bypass (75% CO2 Capture)				**x $1, 000**
Plant Size:	563.80 MW, net	Capital Charge Factor	0.1773	Capacity Factor	0.8

Acct No.	Item/Description	Equipment Cost	Material Cost	Labor Direct	Labor Indirect	Bare Erected	Eng'g CM H.O. & %	Eng'g CM H.O. & Total	Process Cont. %	Process Cont. Total	Project Cont. %	Project Cont. Total	TOTAL PLANT COST $	TOTAL PLANT COST $/kW
14	BUILDINGS & STRUCTURES													
14.1	Combustion Turbine Area	$0	$264	$150	$0	$414	8.8%	$36	0%	$0	20.0%	$90	$540	$1
14.2	Steam Turbine Building	$0	$2,374	$3,382	$0	$5,756	9.2%	$530	0%	$0	15.0%	$943	$7,229	$13
14.3	Administration Building	$0	$881	$639	$0	$1,520	8.9%	$135	0%	$0	15.0%	$248	$1,903	$3
14.4	Circulation Water Pumphouse	$0	$164	$87	$0	$251	8.8%	$22	0%	$0	15.0%	$41	$314	$1
14.5	Water Treatment Buildings	$0	$583	$568	$0	$1,151	9.0%	$104	0%	$0	15.0%	$188	$1,443	$3
14.6	Machine Shop	$0	$451	$308	$0	$759	8.9%	$67	0%	$0	15.0%	$124	$951	$2
14.7	Warehouse	$0	$728	$470	$0	$1,198	8.9%	$106	0%	$0	15.0%	$196	$1,499	$3
14.8	Other Buildings & Structures	$0	$436	$339	$0	$775	8.9%	$69	0%	$0	20.0%	$169	$1,014	$2
14.9	Waste Treating Building & Str.	$0	$973	$1,860	$0	$2,833	9.3%	$264	0%	$0	20.0%	$619	$3,716	$7
	SUBTOTAL 14.	**$0**	**$6,853**	**$7,804**	**$0**	**$14,657**		**$1,334**		**$0**		**$2,618**	**$18,609**	**$33**
	Total Cost	**$713,833**	**$75,738**	**$297,352**	**$0**	**$1,086,924**		**$102,277**		**$62,313**		**$196,390**	**$1,447,904**	**$2,568**

Owner's Costs		
Preproduction Costs		
6 Months All Labor	$13,340	$24
1 Month Maintenance Materials	$2,952	$5
1 Month Non-fuel Consumables	$373	$1
1 Month Waste Disposal	$315	$1
25% of 1 Months Fuel Cost at 100% CF	$1,679	$3
2% of TPC	$28,958	$51
Total	$47,616	$84
Inventory Capital		
60 day supply of fuel and consumables at 100% CF	$14,175	$25
0.5% of TPC (spare parts)	$7,240	$13
Total	$21,415	$38
Initial Cost for Catalyst and Chemicals	$7,298	$13
Land	$900	$2
Other Owner's Costs	$217,186	$385
Financing Costs	$39,093	$69
Total Overnight Costs (TOC)	**$1,781,411**	**$3,160**
TASC Multiplier (IOU, high risk, 35 year)	1.140	
Total As-Spent Cost (TASC)	**$2,030,809**	**$3,602**

Exhibit 4-153 Case 2 D3D Initial and Annual O&M Expenses

INITIAL & ANNUAL O&M EXPENSES			
Case:	Case 2 D3D - GEE IGCC w/ two WGS bypass (75% CO2 Capture)		
Plant Size (MWe):	563.80	**Heat Rate (Btu/kWh):**	9,969
Primary/Secondary Fuel:	Illinois #6 Bituminous Coal	**Fuel Cost ($/MM Btu):**	1.64
Design/Construction	5 years	**Book Life (yrs):**	30
TPC (Plant Cost) Year:	Jun 2007	**TPI Year:**	2015
Capacity Factor (%):	80	**CO_2 Captured (TPD):**	9,928

OPERATING & MAINTENANCE LABOR

Operating Labor

Operating Labor Rate (base):	$34.65	$/hour
Operating Labor Burden:	30.00	% of base
Labor Overhead Charge:	25.00	% of labor

Operating Labor Requirements per Shift:	units/mod.	Total Plant
Skilled Operator	2.0	2.0
Operator	10.0	10.0
Foreman	1.0	1.0
Lab Tech's etc.	3.0	3.0
TOTAL Operating Jobs	16.0	16.0

	Annual Costs $	Annual Costs $/kW-net
Annual Operating Labor Cost (calc'd)	$6,313,507	$11.198
Maintenance Labor Cost (calc'd)	$15,030,504	$26.659
Administrative & Support Labor (calc'd)	$5,336,003	$9.464
Property Taxes & Insurance	$28,958,076	$51.362
TOTAL FIXED OPERATING COSTS	**$55,638,089**	**$98.684**

VARIABLE OPERATING COSTS

	$	$/kWh-net
Maintenance Material Costs (calc'd)	**$28,334,568**	**0.00717**

Consumables	Consumption Initial	Consumption /Day	Unit Cost	Initial Cost	$	$/kWh-net
Water (/1000 gallons)	0	4,010	1.08	$0	$1,266,455	0.00032
Chemicals						
MU & WT Chem. (lbs)	0	23,889	0.17	$0	$1,207,227	0.00031
Carbon (Mercury Removal) (lb)	74,302	127	1.05	$78,030	$38,945	0.00001
COS Catalyst (m3)	91	0.06	2,397.36	$219,119	$43,824	0.00001
Water Gas Shift Catalyst (ft3)	6,076	4.16	498.83	$3,030,897	$606,179	0.00015
Selexol Solution (gal)	296,322	87	13.40	$3,970,195	$339,078	0.00009
SCR Catalyst (m3)	0	0	0.00	$0	$0	0.00000
Ammonia (19% NH3) (ton)	0	0	0.00	$0	$0	0.00000
Claus Catalyst (ft3)	0	1.99	131.27	$0	$76,378	0.00002
Subtotal Chemicals				**$7,298,241**	**$2,311,631**	**0.00059**
Other						
Supplemental Fuel (MMBtu)	0	0	0.00	$0	$0	0.00000
Gases, N2 etc. (/100scf)	0	0	0.00	$0	$0	0.00000
L.P. Steam (/1000 pounds)	0	0	0.00	$0	$0	0.00000
Subtotal Other				**$0**	**$0**	**0.00000**
Waste Disposal						
Spent Mercury Sorbent (lb)	0	127	0.42	$0	$15,575	0.00000
Flyash (ton)	0	0	0.00	$0	$0	0.00000
Slag (ton)	0	634	16.23	$0	$3,005,186	0.00076
Subtotal Solid Waste Disposal				**$0**	**$3,020,761**	**$0**
By-products & Emissions						
Sulfur (tons)	0	145	0.00	$0	$0	0.00000
Subtotal By-Products				**$0**	**$0**	**$0**
TOTAL VARIABLE OPERATING COSTS					**$34,933,414**	**0.00884**
Coal FUEL (tons)	**0**	**5,781**	**38.19**	**$0**	**$64,462,401**	**0.01631**

Exhibit 4-154 Case 2 D3E (85%) Capital Costs

Department:	NETL Office of Systems Analysis and Planning			**Cost Base:**	Jun 2007
Project:	CO2 Capture Sensitivity Systems Analysis			**Prepared:**	14-Jun-10
Case:	Case 2 D3E - GEE IGCC w/ two WGS bypass (85% CO2 Capture)				**x $1, 000**
Plant Size:	554.48 MW, net	Capital Charge Factor	0.1773	Capacity Factor	0.8

Acct No.	Item/Description	Equipment Cost	Material Cost	Labor Direct	Labor Indirect	Bare Erected	Eng'g CM H.O. & %	Eng'g CM H.O. & Total	Process Cont. %	Process Cont. Total	Project Cont. %	Project Cont. Total	TOTAL PLANT COST $	TOTAL PLANT COST $/kW
1	COAL HANDLING SYSTEM													
1.1	Coal Receive & Unload	$3,744	$0	$1,830	$0	$5,574	9.0%	$499	0%	$0	20.0%	$1,215	$7,288	$13
1.2	Coal Stackout & Reclaim	$4,839	$0	$1,173	$0	$6,012	8.8%	$527	0%	$0	20.0%	$1,308	$7,846	$14
1.3	Coal Conveyors & Yd Crus	$4,499	$0	$1,161	$0	$5,659	8.8%	$497	0%	$0	20.0%	$1,231	$7,387	$13
1.4	Other Coal Handling	$1,177	$0	$269	$0	$1,446	8.8%	$126	0%	$0	20.0%	$314	$1,886	$3
1.5	Sorbent Receive & Unload	$0	$0	$0	$0	$0	0.0%	$0	0%	$0	0.0%	$0	$0	$0
1.6	Sorbent Stackout & Reclaim	$0	$0	$0	$0	$0	0.0%	$0	0%	$0	0.0%	$0	$0	$0
1.7	Sorbent Conveyors	$0	$0	$0	$0	$0	0.0%	$0	0%	$0	0.0%	$0	$0	$0
1.8	Other Sorbent Handling	$0	$0	$0	$0	$0	0.0%	$0	0%	$0	0.0%	$0	$0	$0
1.9	Coal & Sorbent Hnd.Foundations	$0	$2,650	$6,625	$0	$9,275	9.6%	$889	0%	$0	20.0%	$2,033	$12,197	$22
	SUBTOTAL 1.	**$14,258**	**$2,650**	**$11,057**	**$0**	**$27,965**		**$2,538**		**$0**		**$6,101**	**$36,605**	**$66**
2	COAL PREP & FEED SYSTEMS													
2.1	Coal Crushing & Drying	w/2.3	$0	w2.3	$0	$0	0.0%	0	0%	0	0.0%	$0	$0	$0
2.2	Prepared Coal Storage & Feed	$1,599	$383	$251	$0	$2,233	8.6%	191	0%	0	20.0%	$485	$2,908	$5
2.3	Slurry Prep & Feed	$21,873	$0	$9,651	$0	$31,524	9.1%	2,864	5%	1,576	20.0%	$7,193	$43,157	$78
2.4	Misc. Coal Prep & Feed	$879	$640	$1,919	$0	$3,438	9.2%	316	0%	0	20.0%	$751	$4,505	$8
2.5	Sorbent Prep Equipment	$0	$0	$0	$0	$0	0.0%	0	0%	0	15.0%	$0	$0	$0
2.6	Sorbent Storage & Feed	$0	$0	$0	$0	$0	0.0%	0	0%	0	15.0%	$0	$0	$0
2.7	Sorbent Injection System	$0	$0	$0	$0	$0	0.0%	0	0%	0	0.0%	$0	$0	$0
2.8	Booster Air Supply System	$0	$0	$0	$0	$0	0.0%	0	0%	0	0.0%	$0	$0	$0
2.9	Coal & Sorbent Feed Foundation	$0	$3,418	$2,806	$0	$6,224	9.3%	576	0%	0	20.0%	$1,360	$8,161	$15
	SUBTOTAL 2.	**$24,351**	**$4,441**	**$14,627**	**$0**	**$43,419**		**$3,947**		**$1,576**		**$9,788**	**$58,731**	**$106**
3	FEEDWATER & MISC. BOP SYSTEMS													
3.1	Feedwater System	2,821	4,845	2,558	0	10,224	9.3%	947	0%	0	20.0%	$2,234	$13,405	$24
3.2	Water Makeup & Pretreating	711	74	398	0	1,183	9.5%	113	0%	0	30.0%	$389	$1,685	$3
3.3	Other Feedwater Subsystems	1,544	522	469	0	2,535	9.0%	228	0%	0	20.0%	$552	$3,315	$6
3.4	Service Water Systems	407	838	2,909	0	4,155	9.8%	405	0%	0	30.0%	$1,368	$5,928	$11
3.5	Other Boiler Plant Systems	2,185	847	2,098	0	5,129	9.5%	487	0%	0	20.0%	$1,123	$6,739	$12
3.6	FO Supply Sys & Nat Gas	$315	$595	$555	$0	1,466	9.6%	141	0%	0	20.0%	$321	$1,929	$3
3.7	Waste Treatment Equipment	994	0	607	0	1,601	9.7%	156	0%	0	30.0%	$527	$2,284	$4
3.8	Misc. Power Plant Equipment	$1,121	$150	$575	$0	1,846	9.7%	178	0%	0	30.0%	$607	$2,632	$5
	SUBTOTAL 3.	**$10,098**	**$7,871**	**$10,169**	**$0**	**$28,139**		**$2,655**		**$0**		**$7,122**	**$37,916**	**$68**
4	GASIFIER & ACCESSORIES													
4.1	Syngas Cooler Gasifier System	$113,668	$0	$62,282	$0	$175,950	9.2%	$16,118	13.9%	$24,418	15.3%	$33,195	$249,681	$450
4.2	Syngas Cooler (w/ Gasifier - $)	w/4.1	$0	w/ 4.1	$0	$0	0.0%	$0	0%	$0	0.0%	$0	$0	$0
4.3	ASU/Oxidant Compression	$192,697	$0	w/equip.	$0	$192,697	9.7%	$18,678	0%	$0	10.0%	$21,138	$232,513	$419
4.4	Scrubber & Low Temperature Cooling	6,039	$4,915	$5,116	$0	$16,070	9.6%	$1,543	0%	$0	20.0%	$3,523	$21,136	$38
4.5	Black Water & Sour Gas Section	w/4.1	$0	w/4.1	$0	$0	0.0%	$0	0%	$0	0.0%	$0	$0	$0
4.6	Soot Recovery & SARU	$1,842	$874	$1,728	$0	$4,445	9.6%	$428	0%	$0	20.0%	$975	$5,847	$11
4.7	Major Component Rigging	w/4.1	$0	w/4.1	$0	$0	0.0%	$0	0%	$0	0.0%	$0	$0	$0
4.8	Gasification Foundations	$0	$6,475	$5,405	$0	$11,879	9.3%	$1,101	0%	$0	25.0%	$3,245	$16,225	$29
	SUBTOTAL 4.	**$314,246**	**$12,264**	**$74,531**	**$0**	**$401,041**		**$37,869**		**$24,418**		**$62,075**	**$525,402**	**$948**

Exhibit 4-154 Case 2 D3E (85%) Capital Costs (continued)

		Department:	NETL Office of Systems Analysis and Planning									**Cost Base:**	Jun 2007	
		Project:	CO2 Capture Sensitivity Systems Analysis									**Prepared:**	14-Jun-10	
		Case:	Case 2 D3E - GEE IGCC w/ two WGS bypass (85% CO2 Capture)										**x $1, 000**	
		Plant Size:	554.48	MW, net			Capital Charge Factor	0.1773	Capacity Factor	0.8				
			Equipment	**Material**	**Labor**		**Bare**	**Eng'g CM H.O. &**		**Process Cont.**		**Project Cont.**	**TOTAL PLANT COST**	
Acct No.		**Item/Description**	**Cost**	**Cost**	**Direct**	**Indirect**	**Erected**	**%**	**Total**	**%**	**Total**	**%**	**Total**	**$**	**$/kW**
5A		GAS CLEANUP & PIPING							*						
	5A.1	Double Stage Selexol	$71,710	$0	$60,848	$0	$132,558	9.7%	$12,820	20%	$26,512	20.0%	$34,378	$206,267	$372
	5A.2	Elemental Sulfur Plant	$10,310	$2,055	$13,302	$0	$25,668	9.7%	$2,493	0%	$0	20.0%	$5,632	$33,793	$61
	5A.3	Mercury Removal	$1,358	$0	$1,034	$0	$2,392	9.7%	$231	5%	$120	20.0%	$549	$3,291	$6
	5A.4	Shift Reactors	$10,763	$0	$4,333	$0	$15,096	9.6%	$1,447	0%	$0	20.0%	$3,309	$19,851	$36
	5A.5	COS Hydrolysis	$451	$0	$589	$0	$1,040	9.7%	$101	0%	$0	20.0%	$228	$1,369	$2
	5A.6	Particulate Removal	$0	$0	$0	$0	$0	0.0%	$0	0%	$0	10.0%	$0	$0	$0
	5A.7	Blowback Gas Systems	$1,347	$0	$255	$0	$1,602	12.2%	$195	0%	$0	20.0%	$360	$2,157	$4
	5A.8	Fuel Gas Piping	$0	$637	$446	$0	$1,082	9.3%	$100	0%	$0	20.0%	$237	$1,419	$3
	5A.9	HGCU Foundations	$0	$641	$413	$0	$1,053	9.2%	$97	0%	$0	30.0%	$345	$1,495	$3
	5A.10	Open	$0	$0	$0	$0	$0	0.0%	$0	0%	$0	0.0%	$0	$0	$0
		SUBTOTAL 5A.	**$95,940**	**$3,332**	**$81,219**	**$0**	**$180,491**		**$17,485**		**$26,631**		**$45,036**	**$269,644**	**$486**
5B		CO2 REMOVAL & COMPRESSION													
	5B.1	CO2 Removal System	$0	$0	$0	$0	$0	9.6%	$0	0%	$0	20.0%	$0	$0	$0
	5B.2	CO2 Compression & Drying	$17,272	$0	$10,588	$0	$27,860	9.6%	$2,684	0%	$0	20.0%	$6,109	$36,652	$66
	5B.3	CO2 Pipeline											0	0	0
	5B.4	CO2 Storage											0	0	0
	5B.5	CO2 Monitoring											0	0	0
		SUBTOTAL 5B.	**$17,272**	**$0**	**$10,588**	**$0**	**$27,860**		**$2,684**		**$0**		**$6,109**	**$36,652**	**$66**
6		COMBUSTION TURBINE/ACCESSORIES													
	6.1	Combustion Turbine Generator	$92,026	$0	$6,583	$0	$98,609	9.5%	9,348	10%	9,861	10.0%	11,782	129,600	234
	6.2	Syngas Expander	$5,550	$0	$767	$0	$6,316	9.5%	600	0%	0	15.0%	1,038	7,954	14
	6.3	Compressed Air Piping	$0	$0	$0	$0	$0	0.0%	0	0%	0	0.0%	0	0	0
	6.4	Combustion Turbine Foundations	$0	$887	$982	$0	$1,868	9.4%	175	0%	0	30.0%	613	2,656	5
		SUBTOTAL 6.	**$97,576**	**$887**	**$8,331**	**$0**	**$106,794**		**$10,123**		**$9,861**		**$13,432**	**$140,210**	**$253**
7		HRSG, DUCTING & STACK													
	7.1	Heat Recovery Steam Generator	$33,726	$0	$4,795	$0	$38,521	9.5%	$3,663	0%	$0	10.0%	$4,218	$46,402	$84
	7.2	Open	$0	$0	$0	$0	$0	0.0%	$0	0%	$0	0.0%	$0	$0	$0
	7.3	Ductwork	$0	$1,729	$1,234	$0	$2,963	8.8%	$260	0%	$0	20.0%	$645	$3,867	$7
	7.4	Stack	$3,373	$0	$1,267	$0	$4,641	9.6%	$445	0%	$0	10.0%	$509	$5,594	$10
	7.9	HRSG, Duct & Stack Foundations	$0	$676	$649	$0	$1,325	9.3%	$123	0%	$0	30.0%	$434	$1,883	$3
		SUBTOTAL 7.	**$37,099**	**$2,405**	**$7,945**	**$0**	**$47,449**		**$4,490**		**$0**		**$5,806**	**$57,746**	**$104**
8		STEAM TURBINE GENERATOR													
	8.1	Steam TG & Accessories	$28,579	$0	$4,886	$0	$33,465	9.6%	$3,211	0%	$0	10.0%	$3,668	$40,344	$73
	8.2	Turbine Plant Auxiliaries	$198	$0	$454	$0	$652	9.8%	$64	0%	$0	10.0%	$72	$788	$1
	8.3	Condenser & Auxiliaries	$5,082	$0	$1,492	$0	$6,574	9.6%	$628	0%	$0	10.0%	$720	$7,923	$14
	8.4	Steam Piping	$4,980	$0	$3,503	$0	$8,484	8.6%	$729	0%	$0	25.0%	$2,303	$11,516	$21
	8.9	TG Foundations	$0	$983	$1,661	$0	$2,644	9.5%	$251	0%	$0	30.0%	$868	$3,763	$7
		SUBTOTAL 8.	**$38,840**	**$983**	**$11,997**	**$0**	**$51,820**		**$4,883**		**$0**		**$7,631**	**$64,334**	**$116**
9		COOLING WATER SYSTEM													
	9.1	Cooling Towers	$7,135	$0	$1,298	$0	$8,433	9.5%	$803	0%	$0	15.0%	$1,385	$10,621	$19
	9.2	Circulating Water Pumps	$1,856	$0	$134	$0	$1,990	8.4%	$168	0%	$0	15.0%	$324	$2,481	$4
	9.3	Circ. Water System Auxiliaries	$155	$0	$22	$0	$177	9.5%	$17	0%	$0	15.0%	$29	$224	$0
	9.4	Circ. Water Piping	$0	$6,481	$1,680	$0	$8,161	9.0%	$738	0%	$0	20.0%	$1,780	$10,679	$19
	9.5	Make-up Water System	$385	$0	$551	$0	$936	9.6%	$90	0%	$0	20.0%	$205	$1,231	$2
	9.6	Component Cooling Water System	$765	$915	$651	$0	$2,331	9.4%	$218	0%	$0	20.0%	$510	$3,060	$6
	9.9	Circ. Water System Foundations	$0	$2,379	$4,044	$0	$6,423	9.5%	$609	0%	$0	30.0%	$2,110	$9,142	$16
		SUBTOTAL 9.	**$10,296**	**$9,775**	**$8,381**	**$0**	**$28,452**		**$2,643**		**$0**		**$6,343**	**$37,438**	**$68**

Exhibit 4-154 Case 2 D3E (85%) Capital Costs (continued)

Department:	NETL Office of Systems Analysis and Planning			**Cost Base:**	Jun 2007
Project:	CO2 Capture Sensitivity Systems Analysis			**Prepared:**	14-Jun-10
Case:	Case 2 D3E - GEE IGCC w/ two WGS bypass (85% CO2 Capture)				**x $1, 000**
Plant Size:	554.48 MW, net	Capital Charge Factor 0.1773	Capacity Factor 0.8		

Acct No.	Item/Description	Equipment Cost	Material Cost	Labor Direct	Labor Indirect	Bare Erected	Eng'g CM H.O. & %	Eng'g CM H.O. & Total	Process Cont. %	Process Cont. Total	Project Cont. %	Project Cont. Total	TOTAL PLANT COST $	TOTAL PLANT COST $/kW
10	ASH/SPENT SORBENT HANDLING SYS													
10.1	Slag Dewatering & Cooling	$12,118	$6,682	$13,574	$0	$32,374	9.7%	$3,125	0%	$0	10.0%	$3,550	$39,049	$70
10.2	Gasifier Ash Depressurization	w/10.1	w/10.1	w/10.1	$0	$0	0.0%	$0	0%	$0	0.0%	$0	$0	$0
10.3	Cleanup Ash Depressurization	w/10.1	w/10.1	w/10.1	$0	$0	0.0%	$0	0%	$0	0.0%	$0	$0	$0
10.4	High Temperature Ash Piping	$0	$0	$0	$0	$0	0.0%	$0	0%	$0	0.0%	$0	$0	$0
10.5	Other Ash Recovery Equipment	$0	$0	$0	$0	$0	0.0%	$0	0%	$0	0.0%	$0	$0	$0
10.6	Ash Storage Silos	$588	$0	$640	$0	$1,227	9.7%	$119	0%	$0	15.0%	$202	$1,549	$3
10.7	Ash Transport & Feed Equipment	$788	$0	$190	$0	$979	9.3%	$91	0%	$0	15.0%	$160	$1,230	$2
10.8	Misc. Ash Handling Equipment	$1,218	$1,492	$446	$0	$3,156	9.5%	$300	0%	$0	15.0%	$518	$3,974	$7
10.9	Ash/Spent Sorbent Foundation	$0	$52	$65	$0	$117	9.4%	$11	0%	$0	30.0%	$38	$167	$0
	SUBTOTAL 10.	**$14,712**	**$8,226**	**$14,915**	**$0**	**$37,853**		**$3,646**		**$0**		**$4,469**	**$45,969**	**$83**
11	ACCESSORY ELECTRIC PLANT													
11.1	Generator Equipment	$952	$0	$942	$0	$1,894	9.5%	$181	0%	$0	10.0%	$207	$2,282	$4
11.2	Station Service Equipment	$4,639	$0	$418	$0	$5,057	9.2%	$466	0%	$0	10.0%	$552	$6,076	$11
11.3	Switchgear & Motor Control	$8,576	$0	$1,560	$0	$10,136	9.3%	$940	0%	$0	15.0%	$1,661	$12,737	$23
11.4	Conduit & Cable Tray	$0	$3,984	$13,143	$0	$17,127	9.7%	$1,657	0%	$0	25.0%	$4,696	$23,479	$42
11.5	Wire & Cable	$0	$7,612	$5,001	$0	$12,613	7.3%	$916	0%	$0	25.0%	$3,382	$16,912	$31
11.6	Protective Equipment	$0	$686	$2,496	$0	$3,182	9.8%	$311	0%	$0	15.0%	$524	$4,016	$7
11.7	Standby Equipment	$234	$0	$229	$0	$463	9.5%	$44	0%	$0	15.0%	$76	$584	$1
11.8	Main Power Transformers	$17,599	$0	$145	$0	$17,744	7.6%	$1,342	0%	$0	15.0%	$2,863	$21,948	$40
11.9	Electrical Foundations	$0	$157	$413	$0	$570	9.6%	$55	0%	$0	30.0%	$187	$812	$1
	SUBTOTAL 11.	**$32,000**	**$12,439**	**$24,346**	**$0**	**$68,786**		**$5,911**		**$0**		**$14,150**	**$88,847**	**$160**
12	INSTRUMENTATION & CONTROL													
12.1	IGCC Control Equipment	w/4.1	$0	w/4.1	$0	$0	0.0%	$0	0%	$0	0.0%	$0	$0	$0
12.2	Combustion Turbine Control	w/6.1	$0	w/6.1	$0	$0	0.0%	$0	0%	$0	0.0%	$0	$0	$0
12.3	Steam Turbine Control	w/8.1	$0	w/8.1	$0	$0	0.0%	$0	0%	$0	0.0%	$0	$0	$0
12.4	Other Major Component Control	$1,117	$0	$746	$0	$1,863	9.5%	$176	5%	$93	15.0%	$320	$2,453	$4
12.5	Signal Processing Equipment	w/12.7	$0	w/12.7	$0	$0	0.0%	$0	0%	$0	0.0%	$0	$0	$0
12.6	Control Boards,Panels & Racks	$257	$0	$165	$0	$421	9.5%	$40	5%	$21	20.0%	$96	$579	$1
12.7	Computer & Accessories	$5,960	$0	$191	$0	$6,151	9.2%	$565	5%	$308	10.0%	$702	$7,725	$14
12.8	Instrument Wiring & Tubing	$0	$2,082	$4,256	$0	$6,338	8.5%	$538	5%	$317	25.0%	$1,798	$8,991	$16
12.9	Other I & C Equipment	$3,984	$0	$1,935	$0	$5,919	9.4%	$557	5%	$296	15.0%	$1,016	$7,787	$14
	SUBTOTAL 12.	**$11,318**	**$2,082**	**$7,292**	**$0**	**$20,692**		**$1,875**		**$1,035**		**$3,933**	**$27,535**	**$50**
13	IMPROVEMENTS TO SITE													
13.1	Site Preparation	0	109	2,335	0	2,445	9.9%	243	0%	0	30.0%	806	3,494	6
13.2	Site Improvements	0	1,943	2,583	0	4,526	9.9%	446	0%	0	30.0%	1,492	6,464	12
13.3	Site Facilities	3,483	0	3,675	0	7,157	9.9%	705	0%	0	30.0%	2,359	10,222	18
	SUBTOTAL 13.	**$3,483**	**$2,053**	**$8,593**	**$0**	**$14,128**		**$1,395**		**$0**		**$4,657**	**$20,179**	**$36**

Exhibit 4-154 Case 2 D3E (85%) Capital Costs (continued)

Department:	NETL Office of Systems Analysis and Planning			**Cost Base:**	Jun 2007
Project:	CO2 Capture Sensitivity Systems Analysis			**Prepared:**	27-May-11
Case:	Case 2 D3E - GEE IGCC w/ two WGS bypass (85% CO2 Capture)				**x $1, 000**
Plant Size:	554.48 MW, net	Capital Charge Factor 0.1773	Capacity Factor 0.8		

Acct No.	Item/Description	Equipment Cost	Material Cost	Labor Direct	Labor Indirect	Bare Erected	Eng'g CM H.O. & %	Eng'g CM H.O. & Total	Process Cont. %	Process Cont. Total	Project Cont. %	Project Cont. Total	TOTAL PLANT COST $	TOTAL PLANT COST $/kW
14	BUILDINGS & STRUCTURES													
14.1	Combustion Turbine Area	$0	$265	$150	$0	$414	8.8%	$36	0%	$0	20.0%	$90	$541	$1
14.2	Steam Turbine Building	$0	$2,376	$3,385	$0	$5,762	9.2%	$530	0%	$0	15.0%	$944	$7,236	$13
14.3	Administration Building	$0	$882	$640	$0	$1,521	8.9%	$135	0%	$0	15.0%	$249	$1,905	$3
14.4	Circulation Water Pumphouse	$0	$166	$88	$0	$253	8.8%	$22	0%	$0	15.0%	$41	$317	$1
14.5	Water Treatment Buildings	$0	$595	$580	$0	$1,175	9.0%	$106	0%	$0	15.0%	$192	$1,474	$3
14.6	Machine Shop	$0	$451	$309	$0	$760	8.9%	$67	0%	$0	15.0%	$124	$952	$2
14.7	Warehouse	$0	$729	$470	$0	$1,199	8.9%	$106	0%	$0	15.0%	$196	$1,501	$3
14.8	Other Buildings & Structures	$0	$436	$340	$0	$776	8.9%	$69	0%	$0	20.0%	$169	$1,015	$2
14.9	Waste Treating Building & Str.	$0	$975	$1,864	$0	$2,839	9.3%	$265	0%	$0	20.0%	$621	$3,724	$7
	SUBTOTAL 14.	**$0**	**$6,875**	**$7,826**	**$0**	**$14,701**		**$1,338**		**$0**		**$2,626**	**$18,665**	**$34**
	Total Cost	**$721,489**	**$76,282**	**$301,818**	**$0**	**$1,099,590**		**$103,483**		**$63,521**		**$199,278**	**$1,465,871**	**$2,644**

Owner's Costs			
Preproduction Costs			
6 Months All Labor		$13,449	$24
1 Month Maintenance Materials		$2,986	$5
1 Month Non-fuel Consumables		$393	$1
1 Month Waste Disposal		$317	$1
25% of 1 Months Fuel Cost at 100% CF		$1,693	$3
2% of TPC		$29,317	$53
Total		$48,156	$87
Inventory Capital			
60 day supply of fuel and consumables at 100% CF		$14,330	$26
0.5% of TPC (spare parts)		$7,329	$13
Total		$21,659	$39
Initial Cost for Catalyst and Chemicals		$7,797	$14
Land		$900	$2
Other Owner's Costs		$219,881	$397
Financing Costs		$39,579	$71
Total Overnight Costs (TOC)		**$1,803,843**	**$3,253**
TASC Multiplier	(IOU, high risk, 35 year)	1.140	
Total As-Spent Cost (TASC)		**$2,056,381**	**$3,709**

Exhibit 4-155 Case 2 D3E Initial and Annual O&M Expenses

INITIAL & ANNUAL O&M EXPENSES			
Case:	Case 2 D3E - GEE IGCC w/ two WGS bypass (85% CO2 Capture)		
Plant Size (MWe):	554.48	**Heat Rate (Btu/kWh):**	10,222
Primary/Secondary Fuel:	Illinois #6 Bituminous Coal	**Fuel Cost ($/MM Btu):**	1.64
Design/Construction	5 years	**Book Life (yrs):**	30
TPC (Plant Cost) Year:	Jun 2007	**TPI Year:**	2015
Capacity Factor (%):	80	**CO_2 Captured (TPD):**	11,376

OPERATING & MAINTENANCE LABOR

Operating Labor

Operating Labor Rate (base):	$34.65	$/hour
Operating Labor Burden:	30.00	% of base
Labor Overhead Charge:	25.00	% of labor

Operating Labor Requirements per Shift:	units/mod.	Total Plant
Skilled Operator	2.0	2.0
Operator	10.0	10.0
Foreman	1.0	1.0
Lab Tech's etc.	3.0	3.0
TOTAL Operating Jobs	16.0	16.0

	Annual Costs $	Annual Costs $/kW-net
Annual Operating Labor Cost (calc'd)	$6,313,507	$11.386
Maintenance Labor Cost (calc'd)	$15,205,658	$27.423
Administrative & Support Labor (calc'd)	$5,379,791	$9.702
Property Taxes & Insurance	$29,317,421	$52.873
TOTAL FIXED OPERATING COSTS	**$56,216,377**	**$101.385**

VARIABLE OPERATING COSTS

	$	$/kWh-net
Maintenance Material Costs (calc'd)	**$28,664,758**	**0.00738**

Consumables	Consumption Initial	Consumption /Day	Unit Cost	Initial Cost	$	$/kWh-net
Water (/1000 gallons)	0	4,139	1.08	$0	$1,307,161	0.00034
Chemicals						
MU & WT Chem. (lbs)	0	24,656	0.17	$0	$1,246,030	0.00032
Carbon (Mercury Removal) (lb)	78,342	134	1.05	$82,272	$41,091	0.00001
COS Catalyst (m3)	22	0.02	2,397.36	$52,502	$10,500	0.00000
Water Gas Shift Catalyst (ft3)	7,362	5.04	498.83	$3,672,394	$734,479	0.00019
Selexol Solution (gal)	297,784	92	13.40	$3,989,782	$360,713	0.00009
SCR Catalyst (m3)	0	0	0.00	$0	$0	0.00000
Ammonia (19% NH3) (ton)	0	0	0.00	$0	$0	0.00000
Claus Catalyst (ft3)	0	2.01	131.27	$0	$77,006	0.00002
Subtotal Chemicals				**$7,796,950**	**$2,469,819**	**0.00064**
Other						
Supplemental Fuel (MMBtu)	0	0	0.00	$0	$0	0.00000
Gases, N2 etc. (/100scf)	0	0	0.00	$0	$0	0.00000
L.P. Steam (/1000 pounds)	0	0	0.00	$0	$0	0.00000
Subtotal Other				**$0**	**$0**	**0.00000**
Waste Disposal						
Spent Mercury Sorbent (lb)	0	134	0.42	$0	$16,434	0.00000
Flyash (ton)	0	0	0.00	$0	$0	0.00000
Slag (ton)	0	640	16.23	$0	$3,030,485	0.00078
Subtotal Solid Waste Disposal				**$0**	**$3,046,919**	**$0**
By-products & Emissions						
Sulfur (tons)	0	146	0.00	$0	$0	0.00000
Subtotal By-Products				**$0**	**$0**	**$0**
TOTAL VARIABLE OPERATING COSTS					**$35,488,657**	**0.00913**
Coal FUEL (tons)	**0**	**5,830**	**38.19**	**$0**	**$65,005,231**	**0.01673**

Exhibit 4-156 Case 2 D4A (90%) Capital Costs

Department:	NETL Office of Systems Analysis and Planning			**Cost Base:**	Jun 2007
Project:	CO2 Capture Sensitivity Systems Analysis			**Prepared:**	14-Jun-10
Case:	Case 2 D4A - GEE IGCC w/ two WGS (90% CO2 Capture)				**x $1, 000**
Plant Size:	543.24 MW, net	Capital Charge Factor 0.1773	Capacity Factor 0.8		

Acct No.	Item/Description	Equipment Cost	Material Cost	Labor Direct	Labor Indirect	Bare Erected	Eng'g CM H.O. & %	Eng'g CM H.O. & Total	Process Cont. %	Process Cont. Total	Project Cont. %	Project Cont. Total	TOTAL PLANT COST $	TOTAL PLANT COST $/kW
1	COAL HANDLING SYSTEM													
1.1	Coal Receive & Unload	$3,750	$0	$1,833	$0	$5,583	9.0%	$500	0%	$0	20.0%	$1,217	$7,299	$13
1.2	Coal Stackout & Reclaim	$4,846	$0	$1,175	$0	$6,021	8.8%	$528	0%	$0	20.0%	$1,310	$7,858	$14
1.3	Coal Conveyors & Yd Crus	$4,505	$0	$1,162	$0	$5,668	8.8%	$498	0%	$0	20.0%	$1,233	$7,398	$14
1.4	Other Coal Handling	$1,179	$0	$269	$0	$1,448	8.8%	$127	0%	$0	20.0%	$315	$1,889	$3
1.5	Sorbent Receive & Unload	$0	$0	$0	$0	$0	0.0%	$0	0%	$0	0.0%	$0	$0	$0
1.6	Sorbent Stackout & Reclaim	$0	$0	$0	$0	$0	0.0%	$0	0%	$0	0.0%	$0	$0	$0
1.7	Sorbent Conveyors	$0	$0	$0	$0	$0	0.0%	$0	0%	$0	0.0%	$0	$0	$0
1.8	Other Sorbent Handling	$0	$0	$0	$0	$0	0.0%	$0	0%	$0	0.0%	$0	$0	$0
1.9	Coal & Sorbent Hnd.Foundations	$0	$2,654	$6,635	$0	$9,289	9.6%	$890	0%	$0	20.0%	$2,036	$12,215	$22
	SUBTOTAL 1.	**$14,280**	**$2,654**	**$11,074**	**$0**	**$28,008**		**$2,542**		**$0**		**$6,110**	**$36,660**	**$67**
2	COAL PREP & FEED SYSTEMS													
2.1	Coal Crushing & Drying	w/2.3	$0	w2.3	$0	$0	0.0%	0	0%	0	0.0%	$0	$0	$0
2.2	Prepared Coal Storage & Feed	$1,602	$383	$251	$0	$2,236	8.6%	191	0%	0	20.0%	$485	$2,913	$5
2.3	Slurry Prep & Feed	$21,908	$0	$9,667	$0	$31,575	9.1%	2,869	5%	1,579	20.0%	$7,205	$43,227	$80
2.4	Misc. Coal Prep & Feed	$881	$641	$1,922	$0	$3,443	9.2%	316	0%	0	20.0%	$752	$4,512	$8
2.5	Sorbent Prep Equipment	$0	$0	$0	$0	$0	0.0%	0	0%	0	15.0%	$0	$0	$0
2.6	Sorbent Storage & Feed	$0	$0	$0	$0	$0	0.0%	0	0%	0	15.0%	$0	$0	$0
2.7	Sorbent Injection System	$0	$0	$0	$0	$0	0.0%	0	0%	0	0.0%	$0	$0	$0
2.8	Booster Air Supply System	$0	$0	$0	$0	$0	0.0%	0	0%	0	0.0%	$0	$0	$0
2.9	Coal & Sorbent Feed Foundation	$0	$3,424	$2,811	$0	$6,234	9.3%	577	0%	0	20.0%	$1,362	$8,174	$15
	SUBTOTAL 2.	**$24,391**	**$4,448**	**$14,651**	**$0**	**$43,489**		**$3,954**		**$1,579**		**$9,804**	**$58,826**	**$108**
3	FEEDWATER & MISC. BOP SYSTEMS													
3.1	Feedwater System	2,836	4,870	2,571	0	10,276	9.3%	952	0%	0	20.0%	$2,246	$13,474	$25
3.2	Water Makeup & Pretreating	717	75	401	0	1,193	9.5%	114	0%	0	30.0%	$392	$1,699	$3
3.3	Other Feedwater Subsystems	1,552	524	472	0	2,548	9.0%	229	0%	0	20.0%	$555	$3,332	$6
3.4	Service Water Systems	411	845	2,934	0	4,190	9.8%	409	0%	0	30.0%	$1,380	$5,979	$11
3.5	Other Boiler Plant Systems	2,203	854	2,116	0	5,173	9.5%	491	0%	0	20.0%	$1,133	$6,796	$13
3.6	FO Supply Sys & Nat Gas	$315	$596	$556	$0	1,467	9.6%	141	0%	0	20.0%	$322	$1,930	$4
3.7	Waste Treatment Equipment	1,003	0	612	0	1,615	9.7%	157	0%	0	30.0%	$532	$2,303	$4
3.8	Misc. Power Plant Equipment	$1,121	$150	$576	$0	1,847	9.7%	178	0%	0	30.0%	$608	$2,634	$5
	SUBTOTAL 3.	**$10,158**	**$7,914**	**$10,237**	**$0**	**$28,309**		**$2,671**		**$0**		**$7,166**	**$38,146**	**$70**
4	GASIFIER & ACCESSORIES													
4.1	Syngas Cooler Gasifier System	$113,863	$0	$62,389	$0	$176,251	9.2%	$16,146	13.9%	$24,460	15.3%	$33,252	$250,109	$460
4.2	Syngas Cooler (w/ Gasifier - $)	w/4.1	$0	w/ 4.1	$0	$0	0.0%	$0	0%	$0	0.0%	$0	$0	$0
4.3	ASU/Oxidant Compression	$193,046	$0	w/equip.	$0	$193,046	9.7%	$18,712	0%	$0	10.0%	$21,176	$232,934	$429
4.4	Scrubber & Low Temperature Cooling	6,049	$4,924	$5,125	$0	$16,097	9.6%	$1,546	0%	$0	20.0%	$3,529	$21,172	$39
4.5	Black Water & Sour Gas Section	w/4.1	$0	w/4.1	$0	$0	0.0%	$0	0%	$0	0.0%	$0	$0	$0
4.6	Soot Recovery & SARU	$1,845	$876	$1,731	$0	$4,452	9.6%	$429	0%	$0	20.0%	$976	$5,857	$11
4.7	Major Component Rigging	w/4.1	$0	w/4.1	$0	$0	0.0%	$0	0%	$0	0.0%	$0	$0	$0
4.8	Gasification Foundations	$0	$6,486	$5,414	$0	$11,900	9.3%	$1,103	0%	$0	25.0%	$3,251	$16,253	$30
	SUBTOTAL 4.	**$314,803**	**$12,285**	**$74,659**	**$0**	**$401,747**		**$37,935**		**$24,460**		**$62,183**	**$526,325**	**$969**

Exhibit 4-156 Case 2 D4A (90%) Capital Costs (continued)

Department:	NETL Office of Systems Analysis and Planning			**Cost Base:**	Jun 2007
Project:	CO2 Capture Sensitivity Systems Analysis			**Prepared:**	14-Jun-10
Case:	Case 2 D4A - GEE IGCC w/ two WGS (90% CO2 Capture)				**x $1, 000**
Plant Size:	543.24 MW, net	Capital Charge Factor 0.1773	Capacity Factor 0.8		

Acct No.	Item/Description	Equipment Cost	Material Cost	Labor Direct	Labor Indirect	Bare Erected	Eng'g CM H.O. & %	Eng'g CM H.O. & Total	Process Cont. %	Process Cont. Total	Project Cont. %	Project Cont. Total	TOTAL PLANT COST $	TOTAL PLANT COST $/kW
5A	GAS CLEANUP & PIPING							*						
5A.1	Double Stage Selexol	$74,127	$0	$62,899	$0	$137,025	9.7%	$13,252	20%	$27,405	20.0%	$35,536	$213,219	$392
5A.2	Elemental Sulfur Plant	$10,329	$2,059	$13,326	$0	$25,713	9.7%	$2,498	0%	$0	20.0%	$5,642	$33,853	$62
5A.3	Mercury Removal	$1,376	$0	$1,047	$0	$2,423	9.7%	$234	5%	$121	20.0%	$556	$3,334	$6
5A.4	Shift Reactors	$9,594	$0	$3,862	$0	$13,456	9.7%	$1,308	0%	$0	20.0%	$2,953	$17,718	$33
5A.5	Particulate Removal	$0	$0	$0	$0	$0	0.0%	$0	0%	$0	10.0%	$0	$0	$0
5A.6	Blowback Gas Systems	$1,349	$0	$256	$0	$1,605	12.2%	$196	0%	$0	20.0%	$360	$2,161	$4
5A.7	Fuel Gas Piping	$0	$634	$444	$0	$1,078	9.3%	$100	0%	$0	20.0%	$236	$1,413	$3
5A.9	HGCU Foundations	$0	$642	$414	$0	$1,056	9.2%	$97	0%	$0	30.0%	$346	$1,498	$3
5.9	Open	$0	$0	$0	$0	$0	0.0%	$0	0%	$0	0.0%	$0	$0	$0
	SUBTOTAL 5A.	**$96,775**	**$3,334**	**$82,247**	**$0**	**$182,357**		**$17,685**		**$27,526**		**$45,629**	**$273,196**	**$503**
5B	CO2 REMOVAL & COMPRESSION													
5B.1	CO2 Removal System	$0	$0	$0	$0	$0	9.6%	$0	0%	$0	20.0%	$0	$0	$0
5B.2	CO2 Compression & Drying	$18,256	$0	$11,190	$0	$29,446	9.6%	$2,836	0%	$0	20.0%	$6,456	$38,739	$71
5B.3	CO2 Pipeline											0	0	0
5B.4	CO2 Storage											0	0	0
5B.5	CO2 Monitoring											0	0	0
	SUBTOTAL 5B.	**$18,256**	**$0**	**$11,190**	**$0**	**$29,446**		**$2,836**		**$0**		**$6,456**	**$38,739**	**$71**
6	COMBUSTION TURBINE/ACCESSORIES													
6.1	Combustion Turbine Generator	$92,026	$0	$6,583	$0	$98,609	9.5%	9,348	10%	9,861	10.0%	11,782	129,600	239
6.2	Syngas Expander	$5,550	$0	$767	$0	$6,316	9.5%	600	0%	0	15.0%	1,038	7,954	15
6.3	Compressed Air Piping	$0	$0	$0	$0	$0	0.0%	0	0%	0	0.0%	0	0	0
6.4	Combustion Turbine Foundations	$0	$887	$982	$0	$1,868	9.4%	175	0%	0	30.0%	613	2,656	5
	SUBTOTAL 6.	**$97,576**	**$887**	**$8,331**	**$0**	**$106,794**		**$10,123**		**$9,861**		**$13,432**	**$140,210**	**$258**
7	HRSG, DUCTING & STACK													
7.1	Heat Recovery Steam Generator	$33,620	$0	$4,780	$0	$38,401	9.5%	$3,651	0%	$0	10.0%	$4,205	$46,257	$85
7.2	Open	$0	$0	$0	$0	$0	0.0%	$0	0%	$0	0.0%	$0	$0	$0
7.3	Ductwork	$0	$1,731	$1,235	$0	$2,965	8.8%	$260	0%	$0	20.0%	$645	$3,870	$7
7.4	Stack	$3,376	$0	$1,268	$0	$4,644	9.6%	$445	0%	$0	10.0%	$509	$5,598	$10
7.9	HRSG, Duct & Stack Foundations	$0	$676	$650	$0	$1,326	9.3%	$123	0%	$0	30.0%	$435	$1,884	$3
	SUBTOTAL 7.	**$36,996**	**$2,407**	**$7,933**	**$0**	**$47,336**		**$4,480**		**$0**		**$5,794**	**$57,610**	**$106**
8	STEAM TURBINE GENERATOR													
8.1	Steam TG & Accessories	$28,123	$0	$4,808	$0	$32,931	9.6%	$3,160	0%	$0	10.0%	$3,609	$39,699	$73
8.2	Turbine Plant Auxiliaries	$195	$0	$447	$0	$642	9.8%	$63	0%	$0	10.0%	$70	$775	$1
8.3	Condenser & Auxiliaries	$5,009	$0	$1,471	$0	$6,480	9.6%	$619	0%	$0	10.0%	$710	$7,809	$14
8.4	Steam Piping	$5,006	$0	$3,522	$0	$8,528	8.6%	$733	0%	$0	25.0%	$2,315	$11,576	$21
8.9	TG Foundations	$0	$967	$1,635	$0	$2,603	9.5%	$247	0%	$0	30.0%	$855	$3,704	$7
	SUBTOTAL 8.	**$38,333**	**$967**	**$11,883**	**$0**	**$51,183**		**$4,821**		**$0**		**$7,559**	**$63,564**	**$117**
9	COOLING WATER SYSTEM													
9.1	Cooling Towers	$7,155	$0	$1,302	$0	$8,457	9.5%	$805	0%	$0	15.0%	$1,389	$10,652	$20
9.2	Circulating Water Pumps	$1,856	$0	$134	$0	$1,990	8.4%	$168	0%	$0	15.0%	$324	$2,481	$5
9.3	Circ. Water System Auxiliaries	$155	$0	$22	$0	$177	9.5%	$17	0%	$0	15.0%	$29	$224	$0
9.4	Circ. Water Piping	$0	$6,481	$1,680	$0	$8,161	9.0%	$738	0%	$0	20.0%	$1,780	$10,679	$20
9.5	Make-up Water System	$388	$0	$555	$0	$943	9.6%	$90	0%	$0	20.0%	$207	$1,240	$2
9.6	Component Cooling Water System	$765	$915	$651	$0	$2,331	9.4%	$218	0%	$0	20.0%	$510	$3,060	$6
9.9	Circ. Water System Foundations	$0	$2,379	$4,044	$0	$6,423	9.5%	$609	0%	$0	30.0%	$2,110	$9,142	$17
	SUBTOTAL 9.	**$10,319**	**$9,775**	**$8,388**	**$0**	**$28,483**		**$2,646**		**$0**		**$6,348**	**$37,477**	**$69**

Exhibit 4-156 Case 2 D4A (90%) Capital Costs (continued)

Department:	NETL Office of Systems Analysis and Planning			**Cost Base:**	Jun 2007
Project:	CO2 Capture Sensitivity Systems Analysis			**Prepared:**	14-Jun-10
Case:	Case 2 D4A - GEE IGCC w/ two WGS (90% CO2 Capture)				**x $1, 000**
Plant Size:	543.24 MW, net	Capital Charge Factor	0.1773	Capacity Factor	0.8

Acct No.	Item/Description	Equipment Cost	Material Cost	Labor Direct	Labor Indirect	Bare Erected	Eng'g CM H.O. & %	Eng'g CM H.O. & Total	Process Cont. %	Process Cont. Total	Project Cont. %	Project Cont. Total	TOTAL PLANT COST $	TOTAL PLANT COST $/kW
10	ASH/SPENT SORBENT HANDLING SYS													
10.1	Slag Dewatering & Cooling	$12,136	$6,692	$13,595	$0	$32,424	9.7%	$3,129	0%	$0	10.0%	$3,555	$39,109	$72
10.2	Gasifier Ash Depressurization	w/10.1	w/10.1	w/10.1	$0	$0	0.0%	$0	0%	$0	0.0%	$0	$0	$0
10.3	Cleanup Ash Depressurization	w/10.1	w/10.1	w/10.1	$0	$0	0.0%	$0	0%	$0	0.0%	$0	$0	$0
10.4	High Temperature Ash Piping	$0	$0	$0	$0	$0	0.0%	$0	0%	$0	0.0%	$0	$0	$0
10.5	Other Ash Recovery Equipment	$0	$0	$0	$0	$0	0.0%	$0	0%	$0	0.0%	$0	$0	$0
10.6	Ash Storage Silos	$589	$0	$641	$0	$1,229	9.7%	$119	0%	$0	15.0%	$202	$1,551	$3
10.7	Ash Transport & Feed Equipment	$790	$0	$190	$0	$980	9.3%	$91	0%	$0	15.0%	$161	$1,232	$2
10.8	Misc. Ash Handling Equipment	$1,219	$1,494	$446	$0	$3,160	9.5%	$301	0%	$0	15.0%	$519	$3,980	$7
10.9	Ash/Spent Sorbent Foundation	$0	$52	$65	$0	$117	9.4%	$11	0%	$0	30.0%	$39	$167	$0
	SUBTOTAL 10.	**$14,734**	**$8,239**	**$14,938**	**$0**	**$37,910**		**$3,652**		**$0**		**$4,476**	**$46,038**	**$85**
11	ACCESSORY ELECTRIC PLANT													
11.1	Generator Equipment	$947	$0	$937	$0	$1,885	9.5%	$180	0%	$0	10.0%	$206	$2,271	$4
11.2	Station Service Equipment	$4,697	$0	$423	$0	$5,121	9.2%	$472	0%	$0	10.0%	$559	$6,152	$11
11.3	Switchgear & Motor Control	$8,684	$0	$1,579	$0	$10,264	9.3%	$952	0%	$0	15.0%	$1,682	$12,898	$24
11.4	Conduit & Cable Tray	$0	$4,034	$13,308	$0	$17,342	9.7%	$1,677	0%	$0	25.0%	$4,755	$23,775	$44
11.5	Wire & Cable	$0	$7,708	$5,064	$0	$12,772	7.3%	$928	0%	$0	25.0%	$3,425	$17,125	$32
11.6	Protective Equipment	$0	$686	$2,496	$0	$3,182	9.8%	$311	0%	$0	15.0%	$524	$4,016	$7
11.7	Standby Equipment	$234	$0	$228	$0	$462	9.5%	$44	0%	$0	15.0%	$76	$581	$1
11.8	Main Power Transformers	$17,500	$0	$144	$0	$17,644	7.6%	$1,334	0%	$0	15.0%	$2,847	$21,825	$40
11.9	Electrical Foundations	$0	$156	$410	$0	$567	9.6%	$54	0%	$0	30.0%	$186	$807	$1
	SUBTOTAL 11.	**$32,062**	**$12,584**	**$24,591**	**$0**	**$69,237**		**$5,953**		**$0**		**$14,261**	**$89,451**	**$165**
12	INSTRUMENTATION & CONTROL													
12.1	IGCC Control Equipment	w/4.1	$0	w/4.1	$0	$0	0.0%	$0	0%	$0	0.0%	$0	$0	$0
12.2	Combustion Turbine Control	w/6.1	$0	w/6.1	$0	$0	0.0%	$0	0%	$0	0.0%	$0	$0	$0
12.3	Steam Turbine Control	w/8.1	$0	w/8.1	$0	$0	0.0%	$0	0%	$0	0.0%	$0	$0	$0
12.4	Other Major Component Control	$1,126	$0	$752	$0	$1,877	9.5%	$178	5%	$94	15.0%	$322	$2,471	$5
12.5	Signal Processing Equipment	w/12.7	$0	w/12.7	$0	$0	0.0%	$0	0%	$0	0.0%	$0	$0	$0
12.6	Control Boards,Panels & Racks	$259	$0	$166	$0	$425	9.5%	$40	5%	$21	20.0%	$97	$583	$1
12.7	Computer & Accessories	$6,005	$0	$192	$0	$6,197	9.2%	$569	5%	$310	10.0%	$708	$7,784	$14
12.8	Instrument Wiring & Tubing	$0	$2,098	$4,288	$0	$6,386	8.5%	$542	5%	$319	25.0%	$1,812	$9,059	$17
12.9	Other I & C Equipment	$4,014	$0	$1,949	$0	$5,963	9.4%	$561	5%	$298	15.0%	$1,023	$7,846	$14
	SUBTOTAL 12.	**$11,404**	**$2,098**	**$7,347**	**$0**	**$20,849**		**$1,889**		**$1,042**		**$3,962**	**$27,743**	**$51**
13	IMPROVEMENTS TO SITE													
13.1	Site Preparation	0	109	2,337	0	2,447	9.9%	243	0%	0	30.0%	807	3,496	6
13.2	Site Improvements	0	1,945	2,585	0	4,530	9.9%	447	0%	0	30.0%	1,493	6,469	12
13.3	Site Facilities	3,485	0	3,678	0	7,163	9.9%	706	0%	0	30.0%	2,361	10,230	19
	SUBTOTAL 13.	**$3,485**	**$2,054**	**$8,600**	**$0**	**$14,140**		**$1,396**		**$0**		**$4,661**	**$20,196**	**$37**

Exhibit 4-156 Case 2 D4A (90%) Capital Costs (continued)

Department:	NETL Office of Systems Analysis and Planning			**Cost Base:**	Jun 2007
Project:	CO2 Capture Sensitivity Systems Analysis			**Prepared:**	27-May-11
Case:	Case 2 D4A - GEE IGCC w/ two WGS (90% CO2 Capture)				**x $1, 000**
Plant Size:	543.24 MW, net	Capital Charge Factor	0.1773	Capacity Factor	0.8

Acct No.	Item/Description	Equipment Cost	Material Cost	Labor Direct	Labor Indirect	Bare Erected	Eng'g CM H.O. & %	Eng'g CM H.O. & Total	Process Cont. %	Process Cont. Total	Project Cont. %	Project Cont. Total	TOTAL PLANT COST $	TOTAL PLANT COST $/kW
14	BUILDINGS & STRUCTURES													
14.1	Combustion Turbine Area	$0	$265	$150	$0	$414	8.8%	$36	0%	$0	20.0%	$90	$541	$1
14.2	Steam Turbine Building	$0	$2,377	$3,387	$0	$5,764	9.2%	$530	0%	$0	15.0%	$944	$7,238	$13
14.3	Administration Building	$0	$882	$640	$0	$1,522	8.9%	$136	0%	$0	15.0%	$249	$1,906	$4
14.4	Circulation Water Pumphouse	$0	$166	$88	$0	$253	8.8%	$22	0%	$0	15.0%	$41	$317	$1
14.5	Water Treatment Buildings	$0	$600	$585	$0	$1,185	9.0%	$107	0%	$0	15.0%	$194	$1,486	$3
14.6	Machine Shop	$0	$452	$309	$0	$761	8.9%	$68	0%	$0	15.0%	$124	$952	$2
14.7	Warehouse	$0	$729	$471	$0	$1,200	8.9%	$106	0%	$0	15.0%	$196	$1,502	$3
14.8	Other Buildings & Structures	$0	$437	$340	$0	$777	8.9%	$69	0%	$0	20.0%	$169	$1,015	$2
14.9	Waste Treating Building & Str.	$0	$976	$1,865	$0	$2,841	9.3%	$265	0%	$0	20.0%	$621	$3,728	$7
	SUBTOTAL 14.	**$0**	**$6,882**	**$7,834**	**$0**	**$14,716**		**$1,340**		**$0**		**$2,628**	**$18,684**	**$34**
	Total Cost	**$723,574**	**$76,529**	**$303,902**	**$0**	**$1,104,005**		**$103,923**		**$64,468**		**$200,471**	**$1,472,866**	**$2,711**

Owner's Costs			
Preproduction Costs			
6 Months All Labor		$13,488	$25
1 Month Maintenance Materials		$2,998	$6
1 Month Non-fuel Consumables		$385	$1
1 Month Waste Disposal		$318	$1
25% of 1 Months Fuel Cost at 100% CF		$1,697	$3
2% of TPC		$29,457	$54
Total		$48,343	$89
Inventory Capital			
60 day supply of fuel and consumables at 100% CF		$14,346	$26
0.5% of TPC (spare parts)		$7,364	$14
Total		$21,711	$40
Initial Cost for Catalyst and Chemicals		$7,200	$13
Land		$900	$2
Other Owner's Costs		$220,930	$407
Financing Costs		$39,767	$73
Total Overnight Costs (TOC)		**$1,811,717**	**$3,335**
TASC Multiplier	(IOU, high risk, 35 year)	1.140	
Total As-Spent Cost (TASC)		**$2,065,358**	**$3,802**

Exhibit 4-157 Case 2 D4A Initial and Annual O&M Expenses

INITIAL & ANNUAL O&M EXPENSES			
Case:	Case 2 D4A - GEE IGCC w/ two WGS (90% CO2 Capture)		
Plant Size (MWe):	543.24	**Heat Rate (Btu/kWh):**	10,459
Primary/Secondary Fuel:	Illinois #6 Bituminous Coal	**Fuel Cost ($/MM Btu):**	1.64
Design/Construction	5 years	**Book Life (yrs):**	30
TPC (Plant Cost) Year:	Jun 2007	**TPI Year:**	2015
Capacity Factor (%):	80	**CO_2 Captured (TPD):**	12,377

OPERATING & MAINTENANCE LABOR

Operating Labor

Operating Labor Rate (base):	$34.65	$/hour
Operating Labor Burden:	30.00	% of base
Labor Overhead Charge:	25.00	% of labor

Operating Labor Requirements per Shift:	units/mod.	Total Plant
Skilled Operator	2.0	2.0
Operator	10.0	10.0
Foreman	1.0	1.0
Lab Tech's etc.	3.0	3.0
TOTAL Operating Jobs	16.0	16.0

	Annual Costs $	Annual Costs $/kW-net
Annual Operating Labor Cost (calc'd)	$6,313,507	$11.622
Maintenance Labor Cost (calc'd)	$15,266,708	$28.103
Administrative & Support Labor (calc'd)	$5,395,054	$9.931
Property Taxes & Insurance	$29,457,328	$54.225
TOTAL FIXED OPERATING COSTS	**$56,432,596**	**$103.881**

VARIABLE OPERATING COSTS

	$	$/kWh-net
Maintenance Material Costs (calc'd)	**$28,779,845**	**0.00756**

Consumables	Consumption Initial	Consumption /Day	Unit Cost	Initial Cost	$	$/kWh-net
Water (/1000 gallons)	0	4,188	1.08	$0	$1,322,853	0.00035
Chemicals						
MU & WT Chem. (lbs)	0	24,952	0.17	$0	$1,260,988	0.00033
Carbon (Mercury Removal) (lb)	79,788	137	1.05	$83,791	$42,011	0.00001
COS Catalyst (m3)	0	0.00	2,397.36	$0	$0	0.00000
Water Gas Shift Catalyst (ft3)	6,247	4.28	498.83	$3,116,197	$623,239	0.00016
Selexol Solution (gal)	298,515	95	13.40	$3,999,575	$371,667	0.00010
SCR Catalyst (m3)	0	0	0.00	$0	$0	0.00000
Ammonia (19% NH3) (ton)	0	0	0.00	$0	$0	0.00000
Claus Catalyst (ft3)	0	2.01	131.27	$0	$77,209	0.00002
Subtotal Chemicals				**$7,199,564**	**$2,375,114**	**0.00062**
Other						
Supplemental Fuel (MMBtu)	0	0	0.00	$0	$0	0.00000
Gases, N2 etc. (/100scf)	0	0	0.00	$0	$0	0.00000
L.P. Steam (/1000 pounds)	0	0	0.00	$0	$0	0.00000
Subtotal Other				**$0**	**$0**	**0.00000**
Waste Disposal						
Spent Mercury Sorbent (lb)	0	137	0.42	$0	$16,802	0.00000
Flyash (ton)	0	0	0.00	$0	$0	0.00000
Slag (ton)	0	641	16.23	$0	$3,037,933	0.00080
Subtotal Solid Waste Disposal				**$0**	**$3,054,735**	**$0**
By-products & Emissions						
Sulfur (tons)	0	146	0.00	$0	$0	0.00000
Subtotal By-Products				**$0**	**$0**	**$0**
TOTAL VARIABLE OPERATING COSTS					**$35,532,546**	**0.00933**
Coal FUEL (tons)	**0**	**5,844**	**38.19**	**$0**	**$65,164,454**	**0.01712**

Exhibit 4-158 Case 2 D4B (95%) Capital Costs

Department:	NETL Office of Systems Analysis and Planning			**Cost Base:**	Jun 2007
Project:	CO2 Capture Sensitivity Systems Analysis			**Prepared:**	14-Jun-10
Case:	Case 2 D4B - GEE IGCC w/ two WGS (95% CO2 Capture)				**x $1, 000**
Plant Size:	528.51 MW, net	Capital Charge Factor 0.1773	Capacity Factor 0.8		

Acct No.	Item/Description	Equipment Cost	Material Cost	Labor Direct	Labor Indirect	Bare Erected	Eng'g CM H.O. & %	Eng'g CM H.O. & Total	Process Cont. %	Process Cont. Total	Project Cont. %	Project Cont. Total	TOTAL PLANT COST $	TOTAL PLANT COST $/kW
1	COAL HANDLING SYSTEM													
1.1	Coal Receive & Unload	$3,746	$0	$1,831	$0	$5,577	9.0%	$500	0%	$0	20.0%	$1,215	$7,291	$14
1.2	Coal Stackout & Reclaim	$4,841	$0	$1,174	$0	$6,014	8.8%	$527	0%	$0	20.0%	$1,308	$7,849	$15
1.3	Coal Conveyors & Yd Crus	$4,500	$0	$1,161	$0	$5,662	8.8%	$497	0%	$0	20.0%	$1,232	$7,390	$14
1.4	Other Coal Handling	$1,177	$0	$269	$0	$1,446	8.8%	$127	0%	$0	20.0%	$315	$1,887	$4
1.5	Sorbent Receive & Unload	$0	$0	$0	$0	$0	0.0%	$0	0%	$0	0.0%	$0	$0	$0
1.6	Sorbent Stackout & Reclaim	$0	$0	$0	$0	$0	0.0%	$0	0%	$0	0.0%	$0	$0	$0
1.7	Sorbent Conveyors	$0	$0	$0	$0	$0	0.0%	$0	0%	$0	0.0%	$0	$0	$0
1.8	Other Sorbent Handling	$0	$0	$0	$0	$0	0.0%	$0	0%	$0	0.0%	$0	$0	$0
1.9	Coal & Sorbent Hnd.Foundations	$0	$2,651	$6,628	$0	$9,279	9.6%	$889	0%	$0	20.0%	$2,034	$12,202	$23
	SUBTOTAL 1.	**$14,264**	**$2,651**	**$11,062**	**$0**	**$27,977**		**$2,540**		**$0**		**$6,103**	**$36,620**	**$69**
2	COAL PREP & FEED SYSTEMS													
2.1	Coal Crushing & Drying	w/2.3	$0	w2.3	$0	$0	0.0%	0	0%	0	0.0%	$0	$0	$0
2.2	Prepared Coal Storage & Feed	$1,600	$383	$251	$0	$2,234	8.6%	191	0%	0	20.0%	$485	$2,909	$6
2.3	Slurry Prep & Feed	$21,883	$0	$9,656	$0	$31,538	9.1%	2,865	5%	1,577	20.0%	$7,196	$43,177	$82
2.4	Misc. Coal Prep & Feed	$880	$640	$1,919	$0	$3,439	9.2%	316	0%	0	20.0%	$751	$4,507	$9
2.5	Sorbent Prep Equipment	$0	$0	$0	$0	$0	0.0%	0	0%	0	15.0%	$0	$0	$0
2.6	Sorbent Storage & Feed	$0	$0	$0	$0	$0	0.0%	0	0%	0	15.0%	$0	$0	$0
2.7	Sorbent Injection System	$0	$0	$0	$0	$0	0.0%	0	0%	0	0.0%	$0	$0	$0
2.8	Booster Air Supply System	$0	$0	$0	$0	$0	0.0%	0	0%	0	0.0%	$0	$0	$0
2.9	Coal & Sorbent Feed Foundation	$0	$3,420	$2,807	$0	$6,227	9.3%	577	0%	0	20.0%	$1,361	$8,165	$15
	SUBTOTAL 2.	**$24,362**	**$4,443**	**$14,634**	**$0**	**$43,438**		**$3,949**		**$1,577**		**$9,793**	**$58,757**	**$111**
3	FEEDWATER & MISC. BOP SYSTEMS													
3.1	Feedwater System	2,826	4,854	2,562	0	10,242	9.3%	949	0%	0	20.0%	$2,238	$13,429	$25
3.2	Water Makeup & Pretreating	711	74	397	0	1,182	9.5%	113	0%	0	30.0%	$388	$1,683	$3
3.3	Other Feedwater Subsystems	1,546	523	470	0	2,539	9.0%	228	0%	0	20.0%	$553	$3,321	$6
3.4	Service Water Systems	407	837	2,906	0	4,150	9.8%	405	0%	0	30.0%	$1,366	$5,921	$11
3.5	Other Boiler Plant Systems	2,182	846	2,096	0	5,123	9.5%	486	0%	0	20.0%	$1,122	$6,731	$13
3.6	FO Supply Sys & Nat Gas	$315	$596	$555	$0	1,466	9.6%	141	0%	0	20.0%	$321	$1,929	$4
3.7	Waste Treatment Equipment	993	0	606	0	1,599	9.7%	156	0%	0	30.0%	$526	$2,281	$4
3.8	Misc. Power Plant Equipment	$1,121	$150	$576	$0	1,847	9.7%	178	0%	0	30.0%	$607	$2,632	$5
	SUBTOTAL 3.	**$10,102**	**$7,879**	**$10,168**	**$0**	**$28,149**		**$2,656**		**$0**		**$7,124**	**$37,929**	**$72**
4	GASIFIER & ACCESSORIES													
4.1	Syngas Cooler Gasifier System	$113,723	$0	$62,312	$0	$176,034	9.2%	$16,126	13.9%	$24,430	15.3%	$33,211	$249,801	$473
4.2	Syngas Cooler (w/ Gasifier - $)	w/4.1	$0	w/ 4.1	$0	$0	0.0%	$0	0%	$0	0.0%	$0	$0	$0
4.3	ASU/Oxidant Compression	$192,904	$0	w/equip.	$0	$192,904	9.7%	$18,698	0%	$0	10.0%	$21,160	$232,762	$440
4.4	Scrubber & Low Temperature Cooling	6,042	$4,918	$5,118	$0	$16,078	9.6%	$1,544	0%	$0	20.0%	$3,524	$21,146	$40
4.5	Black Water & Sour Gas Section	w/4.1	$0	w/4.1	$0	$0	0.0%	$0	0%	$0	0.0%	$0	$0	$0
4.6	Soot Recovery & SARU	$1,842	$875	$1,729	$0	$4,447	9.6%	$429	0%	$0	20.0%	$975	$5,850	$11
4.7	Major Component Rigging	w/4.1	$0	w/4.1	$0	$0	0.0%	$0	0%	$0	0.0%	$0	$0	$0
4.8	Gasification Foundations	$0	$6,478	$5,407	$0	$11,885	9.3%	$1,101	0%	$0	25.0%	$3,247	$16,233	$31
	SUBTOTAL 4.	**$314,511**	**$12,270**	**$74,567**	**$0**	**$401,347**		**$37,898**		**$24,430**		**$62,117**	**$525,792**	**$995**

Exhibit 4-158 Case 2 D4B (95%) Capital Costs (continued)

		Department:	NETL Office of Systems Analysis and Planning										**Cost Base:** Jun 2007	
		Project:	CO2 Capture Sensitivity Systems Analysis										**Prepared:** 14-Jun-10	
		Case:	Case 2 D4B - GEE IGCC w/ two WGS (95% CO2 Capture)										**x $1, 000**	
		Plant Size:	528.51 MW, net				Capital Charge Factor	0.1773	Capacity Factor	0.8				
			Equipment	**Material**	**Labor**		**Bare**	**Eng'g CM H.O. &**		**Process Cont.**		**Project Cont.**	**TOTAL PLANT COST**	
Acct No.		**Item/Description**	**Cost**	**Cost**	**Direct**	**Indirect**	**Erected**	**%**	**Total**	**%**	**Total**	**%**	**Total**	**$**	**$/kW**
5A		GAS CLEANUP & PIPING							*						
	5A.1	Double Stage Selexol	$77,897	$0	$66,097	$0	$143,994	9.7%	$13,926	20%	$28,799	20.0%	$37,344	$224,062	$424
	5A.2	Elemental Sulfur Plant	$10,316	$2,056	$13,310	$0	$25,682	9.7%	$2,495	0%	$0	20.0%	$5,635	$33,812	$64
	5A.3	Mercury Removal	$1,374	$0	$1,046	$0	$2,420	9.7%	$234	5%	$121	20.0%	$555	$3,330	$6
	5A.4	Shift Reactors	$9,582	$0	$3,857	$0	$13,440	9.7%	$1,307	0%	$0	20.0%	$2,949	$17,696	$33
	5A.5	Particulate Removal	$0	$0	$0	$0	$0	0.0%	$0	0%	$0	10.0%	$0	$0	$0
	5A.6	Blowback Gas Systems	$1,348	$0	$255	$0	$1,603	12.2%	$196	0%	$0	20.0%	$360	$2,158	$4
	5A.7	Fuel Gas Piping	$0	$619	$433	$0	$1,052	9.3%	$97	0%	$0	20.0%	$230	$1,379	$3
	5A.9	HGCU Foundations	$0	$641	$413	$0	$1,054	9.2%	$97	0%	$0	30.0%	$345	$1,496	$3
	5.9	Open	$0	$0	$0	$0	$0	0.0%	$0	0%	$0	0.0%	$0	$0	$0
		SUBTOTAL 5A.	**$100,517**	**$3,315**	**$85,412**	**$0**	**$189,245**		**$18,351**		**$28,920**		**$47,418**	**$283,933**	**$537**
5B		CO2 REMOVAL & COMPRESSION													
	5B.1	CO2 Removal System	$0	$0	$0	$0	$0	9.6%	$0	0%	$0	20.0%	$0	$0	$0
	5B.2	CO2 Compression & Drying	$19,059	$0	$11,682	$0	$30,741	9.6%	$2,961	0%	$0	20.0%	$6,740	$40,443	$77
	5B.3	CO2 Pipeline											0	0	0
	5B.4	CO2 Storage											0	0	0
	5B.5	CO2 Monitoring											0	0	0
		SUBTOTAL 5B.	**$19,059**	**$0**	**$11,682**	**$0**	**$30,741**		**$2,961**		**$0**		**$6,740**	**$40,443**	**$77**
6		COMBUSTION TURBINE/ACCESSORIES													
	6.1	Combustion Turbine Generator	$92,026	$0	$6,583	$0	$98,609	9.5%	9,348	10%	9,861	10.0%	11,782	129,600	245
	6.2	Syngas Expander	$5,550	$0	$767	$0	$6,316	9.5%	600	0%	0	15.0%	1,038	7,954	15
	6.3	Compressed Air Piping	$0	$0	$0	$0	$0	0.0%	0	0%	0	0.0%	0	0	0
	6.4	Combustion Turbine Foundations	$0	$887	$982	$0	$1,868	9.4%	175	0%	0	30.0%	613	2,656	5
		SUBTOTAL 6.	**$97,576**	**$887**	**$8,331**	**$0**	**$106,794**		**$10,123**		**$9,861**		**$13,432**	**$140,210**	**$265**
7		HRSG, DUCTING & STACK													
	7.1	Heat Recovery Steam Generator	$33,515	$0	$4,765	$0	$38,280	9.5%	$3,640	0%	$0	10.0%	$4,192	$46,112	$87
	7.2	Open	$0	$0	$0	$0	$0	0.0%	$0	0%	$0	0.0%	$0	$0	$0
	7.3	Ductwork	$0	$1,731	$1,235	$0	$2,967	8.8%	$260	0%	$0	20.0%	$645	$3,872	$7
	7.4	Stack	$3,378	$0	$1,269	$0	$4,647	9.6%	$445	0%	$0	10.0%	$509	$5,601	$11
	7.9	HRSG, Duct & Stack Foundations	$0	$677	$650	$0	$1,327	9.3%	$124	0%	$0	30.0%	$435	$1,885	$4
		SUBTOTAL 7.	**$36,892**	**$2,408**	**$7,920**	**$0**	**$47,220**		**$4,469**		**$0**		**$5,782**	**$57,470**	**$109**
8		STEAM TURBINE GENERATOR													
	8.1	Steam TG & Accessories	$27,561	$0	$4,712	$0	$32,272	9.6%	$3,097	0%	$0	10.0%	$3,537	$38,906	$74
	8.2	Turbine Plant Auxiliaries	$191	$0	$438	$0	$629	9.8%	$62	0%	$0	10.0%	$69	$760	$1
	8.3	Condenser & Auxiliaries	$4,813	$0	$1,413	$0	$6,226	9.6%	$595	0%	$0	10.0%	$682	$7,503	$14
	8.4	Steam Piping	$4,990	$0	$3,510	$0	$8,500	8.6%	$730	0%	$0	25.0%	$2,307	$11,537	$22
	8.9	TG Foundations	$0	$948	$1,603	$0	$2,551	9.5%	$242	0%	$0	30.0%	$838	$3,631	$7
		SUBTOTAL 8.	**$37,554**	**$948**	**$11,676**	**$0**	**$50,178**		**$4,725**		**$0**		**$7,433**	**$62,337**	**$118**
9		COOLING WATER SYSTEM													
	9.1	Cooling Towers	$7,073	$0	$1,287	$0	$8,360	9.5%	$796	0%	$0	15.0%	$1,373	$10,530	$20
	9.2	Circulating Water Pumps	$1,845	$0	$133	$0	$1,978	8.4%	$167	0%	$0	15.0%	$322	$2,467	$5
	9.3	Circ. Water System Auxiliaries	$155	$0	$22	$0	$177	9.5%	$17	0%	$0	15.0%	$29	$222	$0
	9.4	Circ. Water Piping	$0	$6,449	$1,672	$0	$8,121	9.0%	$734	0%	$0	20.0%	$1,771	$10,626	$20
	9.5	Make-up Water System	$385	$0	$550	$0	$935	9.6%	$90	0%	$0	20.0%	$205	$1,230	$2
	9.6	Component Cooling Water System	$761	$911	$648	$0	$2,320	9.4%	$217	0%	$0	20.0%	$507	$3,045	$6
	9.9	Circ. Water System Foundations	$0	$2,367	$4,024	$0	$6,392	9.5%	$606	0%	$0	30.0%	$2,099	$9,097	$17
		SUBTOTAL 9.	**$10,219**	**$9,727**	**$8,337**	**$0**	**$28,283**		**$2,627**		**$0**		**$6,307**	**$37,216**	**$70**

Exhibit 4-158 Case 2 D4B (95%) Capital Costs (continued)

Department:	NETL Office of Systems Analysis and Planning			**Cost Base:**	Jun 2007
Project:	CO2 Capture Sensitivity Systems Analysis			**Prepared:**	14-Jun-10
Case:	Case 2 D4B - GEE IGCC w/ two WGS (95% CO2 Capture)				**x $1, 000**
Plant Size:	528.51 MW, net	Capital Charge Factor	0.1773	Capacity Factor	0.8

Acct No.	Item/Description	Equipment Cost	Material Cost	Labor Direct	Labor Indirect	Bare Erected	Eng'g CM H.O. & %	Eng'g CM H.O. & Total	Process Cont. %	Process Cont. Total	Project Cont. %	Project Cont. Total	TOTAL PLANT COST $	TOTAL PLANT COST $/kW
10	ASH/SPENT SORBENT HANDLING SYS													
10.1	Slag Dewatering & Cooling	$12,123	$6,685	$13,580	$0	$32,388	9.7%	$3,126	0%	$0	10.0%	$3,551	$39,066	$74
10.2	Gasifier Ash Depressurization	w/10.1	w/10.1	w/10.1	$0	$0	0.0%	$0	0%	$0	0.0%	$0	$0	$0
10.3	Cleanup Ash Depressurization	w/10.1	w/10.1	w/10.1	$0	$0	0.0%	$0	0%	$0	0.0%	$0	$0	$0
10.4	High Temperature Ash Piping	$0	$0	$0	$0	$0	0.0%	$0	0%	$0	0.0%	$0	$0	$0
10.5	Other Ash Recovery Equipment	$0	$0	$0	$0	$0	0.0%	$0	0%	$0	0.0%	$0	$0	$0
10.6	Ash Storage Silos	$588	$0	$640	$0	$1,228	9.7%	$119	0%	$0	15.0%	$202	$1,549	$3
10.7	Ash Transport & Feed Equipment	$789	$0	$190	$0	$979	9.3%	$91	0%	$0	15.0%	$161	$1,231	$2
10.8	Misc. Ash Handling Equipment	$1,218	$1,493	$446	$0	$3,157	9.5%	$300	0%	$0	15.0%	$519	$3,976	$8
10.9	Ash/Spent Sorbent Foundation	$0	$52	$65	$0	$117	9.4%	$11	0%	$0	30.0%	$38	$167	$0
	SUBTOTAL 10.	**$14,718**	**$8,230**	**$14,922**	**$0**	**$37,869**		**$3,648**		**$0**		**$4,471**	**$45,989**	**$87**
11	ACCESSORY ELECTRIC PLANT													
11.1	Generator Equipment	$942	$0	$931	$0	$1,873	9.5%	$179	0%	$0	10.0%	$205	$2,257	$4
11.2	Station Service Equipment	$4,775	$0	$430	$0	$5,205	9.2%	$480	0%	$0	10.0%	$568	$6,253	$12
11.3	Switchgear & Motor Control	$8,827	$0	$1,605	$0	$10,432	9.3%	$968	0%	$0	15.0%	$1,710	$13,110	$25
11.4	Conduit & Cable Tray	$0	$4,100	$13,527	$0	$17,628	9.7%	$1,705	0%	$0	25.0%	$4,833	$24,166	$46
11.5	Wire & Cable	$0	$7,835	$5,148	$0	$12,982	7.3%	$943	0%	$0	25.0%	$3,481	$17,407	$33
11.6	Protective Equipment	$0	$686	$2,496	$0	$3,182	9.8%	$311	0%	$0	15.0%	$524	$4,016	$8
11.7	Standby Equipment	$232	$0	$227	$0	$459	9.5%	$44	0%	$0	15.0%	$75	$578	$1
11.8	Main Power Transformers	$17,378	$0	$143	$0	$17,521	7.6%	$1,325	0%	$0	15.0%	$2,827	$21,674	$41
11.9	Electrical Foundations	$0	$155	$407	$0	$563	9.6%	$54	0%	$0	30.0%	$185	$801	$2
	SUBTOTAL 11.	**$32,154**	**$12,776**	**$24,915**	**$0**	**$69,845**		**$6,008**		**$0**		**$14,409**	**$90,263**	**$171**
12	INSTRUMENTATION & CONTROL													
12.1	IGCC Control Equipment	w/4.1	$0	w/4.1	$0	$0	0.0%	$0	0%	$0	0.0%	$0	$0	$0
12.2	Combustion Turbine Control	w/6.1	$0	w/6.1	$0	$0	0.0%	$0	0%	$0	0.0%	$0	$0	$0
12.3	Steam Turbine Control	w/8.1	$0	w/8.1	$0	$0	0.0%	$0	0%	$0	0.0%	$0	$0	$0
12.4	Other Major Component Control	$1,137	$0	$759	$0	$1,896	9.5%	$179	5%	$95	15.0%	$326	$2,496	$5
12.5	Signal Processing Equipment	w/12.7	$0	w/12.7	$0	$0	0.0%	$0	0%	$0	0.0%	$0	$0	$0
12.6	Control Boards,Panels & Racks	$261	$0	$168	$0	$429	9.5%	$41	5%	$21	20.0%	$98	$589	$1
12.7	Computer & Accessories	$6,064	$0	$194	$0	$6,258	9.2%	$574	5%	$313	10.0%	$715	$7,860	$15
12.8	Instrument Wiring & Tubing	$0	$2,118	$4,331	$0	$6,449	8.5%	$547	5%	$322	25.0%	$1,830	$9,148	$17
12.9	Other I & C Equipment	$4,054	$0	$1,968	$0	$6,022	9.4%	$567	5%	$301	15.0%	$1,033	$7,923	$15
	SUBTOTAL 12.	**$11,516**	**$2,118**	**$7,420**	**$0**	**$21,054**		**$1,908**		**$1,053**		**$4,001**	**$28,016**	**$53**
13	IMPROVEMENTS TO SITE													
13.1	Site Preparation	0	110	2,340	0	2,450	9.9%	243	0%	0	30.0%	808	3,501	7
13.2	Site Improvements	0	1,947	2,588	0	4,536	9.9%	447	0%	0	30.0%	1,495	6,478	12
13.3	Site Facilities	3,490	0	3,683	0	7,173	9.9%	707	0%	0	30.0%	2,364	10,243	19
	SUBTOTAL 13.	**$3,490**	**$2,057**	**$8,611**	**$0**	**$14,158**		**$1,398**		**$0**		**$4,667**	**$20,222**	**$38**

Exhibit 4-158 Case 2 D4B (95%) Capital Costs (continued)

Department:	NETL Office of Systems Analysis and Planning			**Cost Base:**	Jun 2007
Project:	CO2 Capture Sensitivity Systems Analysis			**Prepared:**	27-May-11
Case:	Case 2 D4B - GEE IGCC w/ two WGS (95% CO2 Capture)				**x $1, 000**
Plant Size:	528.51 MW, net	Capital Charge Factor	0.1773	Capacity Factor	0.8

Acct No.	Item/Description	Equipment Cost	Material Cost	Labor Direct	Labor Indirect	Bare Erected	Eng'g CM H.O. & %	Eng'g CM H.O. & Total	Process Cont. %	Process Cont. Total	Project Cont. %	Project Cont. Total	TOTAL PLANT COST $	TOTAL PLANT COST $/kW
14	BUILDINGS & STRUCTURES													
14.1	Combustion Turbine Area	$0	$265	$150	$0	$414	8.8%	$36	0%	$0	20.0%	$90	$541	$1
14.2	Steam Turbine Building	$0	$2,378	$3,388	$0	$5,767	9.2%	$531	0%	$0	15.0%	$945	$7,242	$14
14.3	Administration Building	$0	$883	$640	$0	$1,523	8.9%	$136	0%	$0	15.0%	$249	$1,907	$4
14.4	Circulation Water Pumphouse	$0	$165	$87	$0	$252	8.8%	$22	0%	$0	15.0%	$41	$315	$1
14.5	Water Treatment Buildings	$0	$594	$580	$0	$1,174	9.0%	$106	0%	$0	15.0%	$192	$1,472	$3
14.6	Machine Shop	$0	$452	$309	$0	$761	8.9%	$68	0%	$0	15.0%	$124	$953	$2
14.7	Warehouse	$0	$729	$471	$0	$1,200	8.9%	$106	0%	$0	15.0%	$196	$1,503	$3
14.8	Other Buildings & Structures	$0	$437	$340	$0	$777	8.9%	$69	0%	$0	20.0%	$169	$1,016	$2
14.9	Waste Treating Building & Str.	$0	$975	$1,864	$0	$2,839	9.3%	$265	0%	$0	20.0%	$621	$3,724	$7
	SUBTOTAL 14.	**$0**	**$6,878**	**$7,829**	**$0**	**$14,708**		**$1,339**		**$0**		**$2,627**	**$18,673**	**$35**
	Total Cost	**$726,934**	**$76,588**	**$307,485**	**$0**	**$1,111,007**		**$104,599**		**$65,840**		**$202,425**	**$1,483,871**	**$2,808**

Owner's Costs			
Preproduction Costs			
6 Months All Labor		$13,548	$26
1 Month Maintenance Materials		$3,017	$6
1 Month Non-fuel Consumables		$386	$1
1 Month Waste Disposal		$318	$1
25% of 1 Months Fuel Cost at 100% CF		$1,694	$3
2% of TPC		$29,677	$56
Total		$48,640	$92
Inventory Capital			
60 day supply of fuel and consumables at 100% CF		$14,323	$27
0.5% of TPC (spare parts)		$7,419	$14
Total		$21,742	$41
Initial Cost for Catalyst and Chemicals		$7,396	$14
Land		$900	$2
Other Owner's Costs		$222,581	$421
Financing Costs		$40,065	$76
Total Overnight Costs (TOC)		**$1,825,194**	**$3,453**
TASC Multiplier	(IOU, high risk, 35 year)	1.140	
Total As-Spent Cost (TASC)		**$2,080,721**	**$3,937**

Exhibit 4-159 Case 2 D4B Initial and Annual O&M Expenses

INITIAL & ANNUAL O&M EXPENSES			
Case:	Case 2 D4B - GEE IGCC w/ two WGS (95% CO2 Capture)		
Plant Size (MWe):	528.51	**Heat Rate (Btu/kWh):**	10,731
Primary/Secondary Fuel:	Illinois #6 Bituminous Coal	**Fuel Cost ($/MM Btu):**	1.64
Design/Construction	5 years	**Book Life (yrs):**	30
TPC (Plant Cost) Year:	Jun 2007	**TPI Year:**	2015
Capacity Factor (%):	80	**CO_2 Captured (TPD):**	13,692

OPERATING & MAINTENANCE LABOR

Operating Labor

Operating Labor Rate (base):	$34.65	$/hour
Operating Labor Burden:	30.00	% of base
Labor Overhead Charge:	25.00	% of labor

Operating Labor Requirements per Shift:	units/mod.	Total Plant
Skilled Operator	2.0	2.0
Operator	10.0	10.0
Foreman	1.0	1.0
Lab Tech's etc.	3.0	3.0
TOTAL Operating Jobs	16.0	16.0

	Annual Costs $	Annual Costs $/kW-net
Annual Operating Labor Cost (calc'd)	$6,313,507	$11.946
Maintenance Labor Cost (calc'd)	$15,363,537	$29.070
Administrative & Support Labor (calc'd)	$5,419,261	$10.254
Property Taxes & Insurance	$29,677,411	$56.153
TOTAL FIXED OPERATING COSTS	**$56,773,716**	**$107.422**

VARIABLE OPERATING COSTS

	$	$/kWh-net
Maintenance Material Costs (calc'd)	**$28,962,382**	**0.00782**

Consumables	Consumption Initial	Consumption /Day	Unit Cost	Initial Cost	$	$/kWh-net
Water (/1000 gallons)	0	4,132	1.08	$0	$1,305,114	0.00035
Chemicals						
MU & WT Chem. (lbs)	0	24,618	0.17	$0	$1,244,079	0.00034
Carbon (Mercury Removal) (lb)	79,648	136	1.05	$83,644	$41,704	0.00001
COS Catalyst (m3)	0	0.00	2,397.36	$0	$0	0.00000
Water Gas Shift Catalyst (ft3)	6,236	4.27	498.83	$3,110,710	$622,142	0.00017
Selexol Solution (gal)	313,601	105	13.40	$4,201,701	$410,790	0.00011
SCR Catalyst (m3)	0	0	0.00	$0	$0	0.00000
Ammonia (19% NH3) (ton)	0	0	0.00	$0	$0	0.00000
Claus Catalyst (ft3)	0	2.01	131.27	$0	$77,069	0.00002
Subtotal Chemicals				**$7,396,055**	**$2,395,785**	**0.00065**
Other						
Supplemental Fuel (MMBtu)	0	0	0.00	$0	$0	0.00000
Gases, N2 etc. (/100scf)	0	0	0.00	$0	$0	0.00000
L.P. Steam (/1000 pounds)	0	0	0.00	$0	$0	0.00000
Subtotal Other				**$0**	**$0**	**0.00000**
Waste Disposal						
Spent Mercury Sorbent (lb)	0	136	0.42	$0	$16,679	0.00000
Flyash (ton)	0	0	0.00	$0	$0	0.00000
Slag (ton)	0	640	16.23	$0	$3,032,589	0.00082
Subtotal Solid Waste Disposal				**$0**	**$3,049,268**	**$0**
By-products & Emissions						
Sulfur (tons)	0	146	0.00	$0	$0	0.00000
Subtotal By-Products				**$0**	**$0**	**$0**
TOTAL VARIABLE OPERATING COSTS					**$35,712,549**	**0.00964**
Coal FUEL (tons)	**0**	**5,834**	**38.19**	**$0**	**$65,049,786**	**0.01756**

Exhibit 4-160 Case 2 D4C (97%) Capital Costs

Department:	NETL Office of Systems Analysis and Planning			**Cost Base:**	Jun 2007
Project:	CO2 Capture Sensitivity Systems Analysis			**Prepared:**	14-Jun-10
Case:	Case 2 D4C - GEE IGCC w/ two WGS (97% CO2 Capture)				**x $1, 000**
Plant Size:	522.89 MW, net	Capital Charge Factor	0.1773	Capacity Factor	0.8

Acct No.	Item/Description	Equipment Cost	Material Cost	Labor Direct	Labor Indirect	Bare Erected	Eng'g CM H.O. & %	Eng'g CM H.O. & Total	Process Cont. %	Process Cont. Total	Project Cont. %	Project Cont. Total	TOTAL PLANT COST $	TOTAL PLANT COST $/kW
1	COAL HANDLING SYSTEM													
1.1	Coal Receive & Unload	$3,744	$0	$1,830	$0	$5,574	9.0%	$499	0%	$0	20.0%	$1,215	$7,288	$14
1.2	Coal Stackout & Reclaim	$4,839	$0	$1,173	$0	$6,012	8.8%	$527	0%	$0	20.0%	$1,308	$7,846	$15
1.3	Coal Conveyors & Yd Crus	$4,499	$0	$1,161	$0	$5,659	8.8%	$497	0%	$0	20.0%	$1,231	$7,387	$14
1.4	Other Coal Handling	$1,177	$0	$269	$0	$1,446	8.8%	$126	0%	$0	20.0%	$314	$1,886	$4
1.5	Sorbent Receive & Unload	$0	$0	$0	$0	$0	0.0%	$0	0%	$0	0.0%	$0	$0	$0
1.6	Sorbent Stackout & Reclaim	$0	$0	$0	$0	$0	0.0%	$0	0%	$0	0.0%	$0	$0	$0
1.7	Sorbent Conveyors	$0	$0	$0	$0	$0	0.0%	$0	0%	$0	0.0%	$0	$0	$0
1.8	Other Sorbent Handling	$0	$0	$0	$0	$0	0.0%	$0	0%	$0	0.0%	$0	$0	$0
1.9	Coal & Sorbent Hnd.Foundations	$0	$2,650	$6,626	$0	$9,275	9.6%	$889	0%	$0	20.0%	$2,033	$12,197	$23
	SUBTOTAL 1.	**$14,259**	**$2,650**	**$11,058**	**$0**	**$27,966**		**$2,539**		**$0**		**$6,101**	**$36,606**	**$70**
2	COAL PREP & FEED SYSTEMS													
2.1	Coal Crushing & Drying	w/2.3	$0	w2.3	$0	$0	0.0%	0	0%	0	0.0%	$0	$0	$0
2.2	Prepared Coal Storage & Feed	$1,599	$383	$251	$0	$2,233	8.6%	191	0%	0	20.0%	$485	$2,908	$6
2.3	Slurry Prep & Feed	$21,873	$0	$9,652	$0	$31,525	9.1%	2,864	5%	1,576	20.0%	$7,193	$43,158	$83
2.4	Misc. Coal Prep & Feed	$879	$640	$1,919	$0	$3,438	9.2%	316	0%	0	20.0%	$751	$4,505	$9
2.5	Sorbent Prep Equipment	$0	$0	$0	$0	$0	0.0%	0	0%	0	15.0%	$0	$0	$0
2.6	Sorbent Storage & Feed	$0	$0	$0	$0	$0	0.0%	0	0%	0	15.0%	$0	$0	$0
2.7	Sorbent Injection System	$0	$0	$0	$0	$0	0.0%	0	0%	0	0.0%	$0	$0	$0
2.8	Booster Air Supply System	$0	$0	$0	$0	$0	0.0%	0	0%	0	0.0%	$0	$0	$0
2.9	Coal & Sorbent Feed Foundation	$0	$3,418	$2,806	$0	$6,224	9.3%	576	0%	0	20.0%	$1,360	$8,161	$16
	SUBTOTAL 2.	**$24,352**	**$4,441**	**$14,627**	**$0**	**$43,420**		**$3,948**		**$1,576**		**$9,789**	**$58,732**	**$112**
3	FEEDWATER & MISC. BOP SYSTEMS													
3.1	Feedwater System	2,823	4,848	2,559	0	10,230	9.3%	948	0%	0	20.0%	$2,236	$13,413	$26
3.2	Water Makeup & Pretreating	708	74	396	0	1,177	9.5%	112	0%	0	30.0%	$387	$1,676	$3
3.3	Other Feedwater Subsystems	1,545	522	470	0	2,536	9.0%	228	0%	0	20.0%	$553	$3,317	$6
3.4	Service Water Systems	405	834	2,895	0	4,134	9.8%	403	0%	0	30.0%	$1,361	$5,898	$11
3.5	Other Boiler Plant Systems	2,173	842	2,087	0	5,103	9.5%	484	0%	0	20.0%	$1,117	$6,705	$13
3.6	FO Supply Sys & Nat Gas	$315	$595	$555	$0	1,466	9.6%	141	0%	0	20.0%	$321	$1,929	$4
3.7	Waste Treatment Equipment	989	0	604	0	1,593	9.7%	155	0%	0	30.0%	$524	$2,272	$4
3.8	Misc. Power Plant Equipment	$1,121	$150	$575	$0	1,846	9.7%	178	0%	0	30.0%	$607	$2,632	$5
	SUBTOTAL 3.	**$10,079**	**$7,865**	**$10,141**	**$0**	**$28,085**		**$2,650**		**$0**		**$7,107**	**$37,842**	**$72**
4	GASIFIER & ACCESSORIES													
4.1	Syngas Cooler Gasifier System	$113,671	$0	$62,284	$0	$175,955	9.2%	$16,119	13.9%	$24,419	15.3%	$33,196	$249,688	$478
4.2	Syngas Cooler (w/ Gasifier - $)	w/4.1	$0	w/ 4.1	$0	$0	0.0%	$0	0%	$0	0.0%	$0	$0	$0
4.3	ASU/Oxidant Compression	$192,866	$0	w/equip.	$0	$192,866	9.7%	$18,694	0%	$0	10.0%	$21,156	$232,717	$445
4.4	Scrubber & Low Temperature Cooling	6,039	$4,915	$5,116	$0	$16,070	9.6%	$1,543	0%	$0	20.0%	$3,523	$21,136	$40
4.5	Black Water & Sour Gas Section	w/4.1	$0	w/4.1	$0	$0	0.0%	$0	0%	$0	0.0%	$0	$0	$0
4.6	Soot Recovery & SARU	$1,842	$875	$1,728	$0	$4,445	9.6%	$428	0%	$0	20.0%	$975	$5,848	$11
4.7	Major Component Rigging	w/4.1	$0	w/4.1	$0	$0	0.0%	$0	0%	$0	0.0%	$0	$0	$0
4.8	Gasification Foundations	$0	$6,475	$5,405	$0	$11,880	9.3%	$1,101	0%	$0	25.0%	$3,245	$16,226	$31
	SUBTOTAL 4.	**$314,418**	**$12,265**	**$74,533**	**$0**	**$401,216**		**$37,886**		**$24,419**		**$62,094**	**$525,614**	**$1,005**

Exhibit 4-160 Case 2 D4C (97%) Capital Costs (continued)

		Department:	NETL Office of Systems Analysis and Planning										**Cost Base:** Jun 2007	
		Project:	CO2 Capture Sensitivity Systems Analysis										**Prepared:** 14-Jun-10	
		Case:	Case 2 D4C - GEE IGCC w/ two WGS (97% CO2 Capture)										**x $1, 000**	
		Plant Size:	522.89 MW, net				Capital Charge Factor	0.1773	Capacity Factor	0.8				
			Equipment	**Material**	**Labor**		**Bare**	**Eng'g CM H.O. &**		**Process Cont.**		**Project Cont.**		**TOTAL PLANT COST**	
Acct No.		**Item/Description**	**Cost**	**Cost**	**Direct**	**Indirect**	**Erected**	**%**	**Total**	**%**	**Total**	**%**	**Total**	**$**	**$/kW**
5A		GAS CLEANUP & PIPING							*						
	5A.1	Double Stage Selexol	$79,390	$0	$67,365	$0	$146,755	9.7%	$14,193	20%	$29,351	20.0%	$38,060	$228,358	$437
	5A.2	Elemental Sulfur Plant	$10,312	$2,055	$13,304	$0	$25,670	9.7%	$2,494	0%	$0	20.0%	$5,633	$33,797	$65
	5A.3	Mercury Removal	$1,374	$0	$1,045	$0	$2,419	9.7%	$234	5%	$121	20.0%	$555	$3,328	$6
	5A.4	Shift Reactors	$9,578	$0	$3,856	$0	$13,434	9.7%	$1,306	0%	$0	20.0%	$2,948	$17,688	$34
	5A.5	Particulate Removal	$0	$0	$0	$0	$0	0.0%	$0	0%	$0	10.0%	$0	$0	$0
	5A.6	Blowback Gas Systems	$1,347	$0	$255	$0	$1,602	12.2%	$195	0%	$0	20.0%	$360	$2,157	$4
	5A.7	Fuel Gas Piping	$0	$612	$429	$0	$1,041	9.3%	$96	0%	$0	20.0%	$227	$1,365	$3
	5A.9	HGCU Foundations	$0	$641	$413	$0	$1,054	9.2%	$97	0%	$0	30.0%	$345	$1,496	$3
	5.9	Open	$0	$0	$0	$0	$0	0.0%	$0	0%	$0	0.0%	$0	$0	$0
		SUBTOTAL 5A.	**$102,001**	**$3,308**	**$86,666**	**$0**	**$191,975**		**$18,615**		**$29,472**		**$48,127**	**$288,189**	**$551**
5B		CO2 REMOVAL & COMPRESSION													
	5B.1	CO2 Removal System	$0	$0	$0	$0	$0	9.6%	$0	0%	$0	20.0%	$0	$0	$0
	5B.2	CO2 Compression & Drying	$19,393	$0	$11,887	$0	$31,280	9.6%	$3,013	0%	$0	20.0%	$6,859	$41,152	$79
	5B.3	CO2 Pipeline											0	0	0
	5B.4	CO2 Storage											0	0	0
	5B.5	CO2 Monitoring											0	0	0
		SUBTOTAL 5B.	**$19,393**	**$0**	**$11,887**	**$0**	**$31,280**		**$3,013**		**$0**		**$6,859**	**$41,152**	**$79**
6		COMBUSTION TURBINE/ACCESSORIES													
	6.1	Combustion Turbine Generator	$92,026	$0	$6,583	$0	$98,609	9.5%	9,348	10%	9,861	10.0%	11,782	129,600	248
	6.2	Syngas Expander	$5,550	$0	$767	$0	$6,316	9.5%	600	0%	0	15.0%	1,038	7,954	15
	6.3	Compressed Air Piping	$0	$0	$0	$0	$0	0.0%	0	0%	0	0.0%	0	0	0
	6.4	Combustion Turbine Foundations	$0	$887	$982	$0	$1,868	9.4%	175	0%	0	30.0%	613	2,656	5
		SUBTOTAL 6.	**$97,576**	**$887**	**$8,331**	**$0**	**$106,794**		**$10,123**		**$9,861**		**$13,432**	**$140,210**	**$268**
7		HRSG, DUCTING & STACK													
	7.1	Heat Recovery Steam Generator	$33,462	$0	$4,758	$0	$38,220	9.5%	$3,634	0%	$0	10.0%	$4,185	$46,039	$88
	7.2	Open	$0	$0	$0	$0	$0	0.0%	$0	0%	$0	0.0%	$0	$0	$0
	7.3	Ductwork	$0	$1,732	$1,236	$0	$2,967	8.8%	$260	0%	$0	20.0%	$646	$3,873	$7
	7.4	Stack	$3,379	$0	$1,269	$0	$4,648	9.6%	$445	0%	$0	10.0%	$509	$5,602	$11
	7.9	HRSG, Duct & Stack Foundations	$0	$677	$650	$0	$1,327	9.3%	$124	0%	$0	30.0%	$435	$1,886	$4
		SUBTOTAL 7.	**$36,840**	**$2,409**	**$7,913**	**$0**	**$47,162**		**$4,463**		**$0**		**$5,775**	**$57,400**	**$110**
8		STEAM TURBINE GENERATOR													
	8.1	Steam TG & Accessories	$27,322	$0	$4,671	$0	$31,993	9.6%	$3,070	0%	$0	10.0%	$3,506	$38,569	$74
	8.2	Turbine Plant Auxiliaries	$190	$0	$435	$0	$624	9.8%	$61	0%	$0	10.0%	$69	$754	$1
	8.3	Condenser & Auxiliaries	$4,738	$0	$1,391	$0	$6,129	9.6%	$586	0%	$0	10.0%	$672	$7,387	$14
	8.4	Steam Piping	$4,984	$0	$3,506	$0	$8,489	8.6%	$729	0%	$0	25.0%	$2,305	$11,523	$22
	8.9	TG Foundations	$0	$940	$1,589	$0	$2,529	9.5%	$240	0%	$0	30.0%	$831	$3,600	$7
		SUBTOTAL 8.	**$37,233**	**$940**	**$11,591**	**$0**	**$49,765**		**$4,686**		**$0**		**$7,382**	**$61,832**	**$118**
9		COOLING WATER SYSTEM													
	9.1	Cooling Towers	$7,053	$0	$1,283	$0	$8,336	9.5%	$794	0%	$0	15.0%	$1,369	$10,499	$20
	9.2	Circulating Water Pumps	$1,834	$0	$132	$0	$1,966	8.4%	$166	0%	$0	15.0%	$320	$2,452	$5
	9.3	Circ. Water System Auxiliaries	$154	$0	$22	$0	$176	9.5%	$17	0%	$0	15.0%	$29	$221	$0
	9.4	Circ. Water Piping	$0	$6,417	$1,664	$0	$8,081	9.0%	$730	0%	$0	20.0%	$1,762	$10,573	$20
	9.5	Make-up Water System	$384	$0	$548	$0	$932	9.6%	$89	0%	$0	20.0%	$204	$1,226	$2
	9.6	Component Cooling Water System	$758	$906	$645	$0	$2,308	9.4%	$216	0%	$0	20.0%	$505	$3,029	$6
	9.9	Circ. Water System Foundations	$0	$2,356	$4,004	$0	$6,360	9.5%	$603	0%	$0	30.0%	$2,089	$9,052	$17
		SUBTOTAL 9.	**$10,181**	**$9,679**	**$8,299**	**$0**	**$28,159**		**$2,616**		**$0**		**$6,278**	**$37,053**	**$71**

Exhibit 4-160 Case 2 D4C (97%) Capital Costs (continued)

Department:	NETL Office of Systems Analysis and Planning			**Cost Base:**	Jun 2007
Project:	CO2 Capture Sensitivity Systems Analysis			**Prepared:**	14-Jun-10
Case:	Case 2 D4C - GEE IGCC w/ two WGS (97% CO2 Capture)				**x $1, 000**
Plant Size:	522.89 MW, net	Capital Charge Factor 0.1773	Capacity Factor 0.8		

Acct No.	Item/Description	Equipment Cost	Material Cost	Labor Direct	Labor Indirect	Bare Erected	Eng'g CM H.O. & %	Eng'g CM H.O. & Total	Process Cont. %	Process Cont. Total	Project Cont. %	Project Cont. Total	TOTAL PLANT COST $	TOTAL PLANT COST $/kW
10	ASH/SPENT SORBENT HANDLING SYS													
10.1	Slag Dewatering & Cooling	$12,118	$6,682	$13,575	$0	$32,376	9.7%	$3,125	0%	$0	10.0%	$3,550	$39,050	$75
10.2	Gasifier Ash Depressurization	w/10.1	w/10.1	w/10.1	$0	$0	0.0%	$0	0%	$0	0.0%	$0	$0	$0
10.3	Cleanup Ash Depressurization	w/10.1	w/10.1	w/10.1	$0	$0	0.0%	$0	0%	$0	0.0%	$0	$0	$0
10.4	High Temperature Ash Piping	$0	$0	$0	$0	$0	0.0%	$0	0%	$0	0.0%	$0	$0	$0
10.5	Other Ash Recovery Equipment	$0	$0	$0	$0	$0	0.0%	$0	0%	$0	0.0%	$0	$0	$0
10.6	Ash Storage Silos	$588	$0	$640	$0	$1,228	9.7%	$119	0%	$0	15.0%	$202	$1,549	$3
10.7	Ash Transport & Feed Equipment	$788	$0	$190	$0	$979	9.3%	$91	0%	$0	15.0%	$160	$1,230	$2
10.8	Misc. Ash Handling Equipment	$1,218	$1,492	$446	$0	$3,156	9.5%	$300	0%	$0	15.0%	$518	$3,974	$8
10.9	Ash/Spent Sorbent Foundation	$0	$52	$65	$0	$117	9.4%	$11	0%	$0	30.0%	$38	$167	$0
	SUBTOTAL 10.	**$14,712**	**$8,227**	**$14,916**	**$0**	**$37,855**		**$3,646**		**$0**		**$4,469**	**$45,971**	**$88**
11	ACCESSORY ELECTRIC PLANT													
11.1	Generator Equipment	$939	$0	$929	$0	$1,868	9.5%	$178	0%	$0	10.0%	$205	$2,251	$4
11.2	Station Service Equipment	$4,802	$0	$433	$0	$5,235	9.2%	$483	0%	$0	10.0%	$572	$6,289	$12
11.3	Switchgear & Motor Control	$8,877	$0	$1,614	$0	$10,492	9.3%	$973	0%	$0	15.0%	$1,720	$13,185	$25
11.4	Conduit & Cable Tray	$0	$4,124	$13,604	$0	$17,728	9.7%	$1,715	0%	$0	25.0%	$4,861	$24,303	$46
11.5	Wire & Cable	$0	$7,879	$5,177	$0	$13,056	7.3%	$948	0%	$0	25.0%	$3,501	$17,506	$33
11.6	Protective Equipment	$0	$686	$2,496	$0	$3,182	9.8%	$311	0%	$0	15.0%	$524	$4,016	$8
11.7	Standby Equipment	$232	$0	$226	$0	$458	9.5%	$44	0%	$0	15.0%	$75	$577	$1
11.8	Main Power Transformers	$17,327	$0	$143	$0	$17,470	7.6%	$1,321	0%	$0	15.0%	$2,819	$21,609	$41
11.9	Electrical Foundations	$0	$155	$406	$0	$561	9.6%	$54	0%	$0	30.0%	$184	$799	$2
	SUBTOTAL 11.	**$32,177**	**$12,844**	**$25,029**	**$0**	**$70,050**		**$6,027**		**$0**		**$14,460**	**$90,536**	**$173**
12	INSTRUMENTATION & CONTROL													
12.1	IGCC Control Equipment	w/4.1	$0	w/4.1	$0	$0	0.0%	$0	0%	$0	0.0%	$0	$0	$0
12.2	Combustion Turbine Control	w/6.1	$0	w/6.1	$0	$0	0.0%	$0	0%	$0	0.0%	$0	$0	$0
12.3	Steam Turbine Control	w/8.1	$0	w/8.1	$0	$0	0.0%	$0	0%	$0	0.0%	$0	$0	$0
12.4	Other Major Component Control	$1,141	$0	$762	$0	$1,902	9.5%	$180	5%	$95	15.0%	$327	$2,504	$5
12.5	Signal Processing Equipment	w/12.7	$0	w/12.7	$0	$0	0.0%	$0	0%	$0	0.0%	$0	$0	$0
12.6	Control Boards,Panels & Racks	$262	$0	$168	$0	$430	9.5%	$41	5%	$22	20.0%	$98	$591	$1
12.7	Computer & Accessories	$6,085	$0	$195	$0	$6,280	9.2%	$576	5%	$314	10.0%	$717	$7,887	$15
12.8	Instrument Wiring & Tubing	$0	$2,126	$4,346	$0	$6,471	8.5%	$549	5%	$324	25.0%	$1,836	$9,180	$18
12.9	Other I & C Equipment	$4,067	$0	$1,975	$0	$6,043	9.4%	$569	5%	$302	15.0%	$1,037	$7,950	$15
	SUBTOTAL 12.	**$11,555**	**$2,126**	**$7,445**	**$0**	**$21,126**		**$1,915**		**$1,056**		**$4,015**	**$28,112**	**$54**
13	IMPROVEMENTS TO SITE													
13.1	Site Preparation	0	110	2,341	0	2,451	9.9%	243	0%	0	30.0%	808	3,503	7
13.2	Site Improvements	0	1,948	2,589	0	4,538	9.9%	448	0%	0	30.0%	1,496	6,481	12
13.3	Site Facilities	3,492	0	3,684	0	7,176	9.9%	707	0%	0	30.0%	2,365	10,248	20
	SUBTOTAL 13.	**$3,492**	**$2,058**	**$8,615**	**$0**	**$14,165**		**$1,398**		**$0**		**$4,669**	**$20,232**	**$39**

Exhibit 4-160 Case 2 D4C (97%) Capital Costs (continued)

Department:	NETL Office of Systems Analysis and Planning			**Cost Base:**	Jun 2007
Project:	CO2 Capture Sensitivity Systems Analysis			**Prepared:**	27-May-11
Case:	Case 2 D4C - GEE IGCC w/ two WGS (97% CO2 Capture)				**x $1, 000**
Plant Size:	522.89 MW, net	Capital Charge Factor	0.1773	Capacity Factor	0.8

Acct No.	Item/Description	Equipment Cost	Material Cost	Labor Direct	Labor Indirect	Bare Erected	Eng'g CM H.O. & %	Eng'g CM H.O. & Total	Process Cont. %	Process Cont. Total	Project Cont. %	Project Cont. Total	TOTAL PLANT COST $	TOTAL PLANT COST $/kW
14	BUILDINGS & STRUCTURES													
14.1	Combustion Turbine Area	$0	$265	$150	$0	$414	8.8%	$36	0%	$0	20.0%	$90	$541	$1
14.2	Steam Turbine Building	$0	$2,379	$3,389	$0	$5,768	9.2%	$531	0%	$0	15.0%	$945	$7,243	$14
14.3	Administration Building	$0	$883	$641	$0	$1,523	8.9%	$136	0%	$0	15.0%	$249	$1,908	$4
14.4	Circulation Water Pumphouse	$0	$164	$87	$0	$251	8.8%	$22	0%	$0	15.0%	$41	$314	$1
14.5	Water Treatment Buildings	$0	$592	$578	$0	$1,170	9.0%	$106	0%	$0	15.0%	$191	$1,467	$3
14.6	Machine Shop	$0	$452	$309	$0	$761	8.9%	$68	0%	$0	15.0%	$124	$953	$2
14.7	Warehouse	$0	$730	$471	$0	$1,201	8.9%	$106	0%	$0	15.0%	$196	$1,503	$3
14.8	Other Buildings & Structures	$0	$437	$340	$0	$777	8.9%	$69	0%	$0	20.0%	$169	$1,016	$2
14.9	Waste Treating Building & Str.	$0	$975	$1,863	$0	$2,838	9.3%	$265	0%	$0	20.0%	$620	$3,723	$7
	SUBTOTAL 14.	**$0**	**$6,876**	**$7,827**	**$0**	**$14,703**		**$1,338**		**$0**		**$2,626**	**$18,668**	**$36**
	Total Cost	**$728,268**	**$76,573**	**$308,878**	**$0**	**$1,113,719**		**$104,861**		**$66,384**		**$203,184**	**$1,488,149**	**$2,846**

Owner's Costs			
Preproduction Costs			
6 Months All Labor		$13,572	$26
1 Month Maintenance Materials		$3,024	$6
1 Month Non-fuel Consumables		$384	$1
1 Month Waste Disposal		$317	$1
25% of 1 Months Fuel Cost at 100% CF		$1,693	$3
2% of TPC		$29,763	$57
Total		$48,754	$93
Inventory Capital			
60 day supply of fuel and consumables at 100% CF		$14,312	$27
0.5% of TPC (spare parts)		$7,441	$14
Total		$21,753	$42
Initial Cost for Catalyst and Chemicals		$7,479	$14
Land		$900	$2
Other Owner's Costs		$223,222	$427
Financing Costs		$40,180	$77
Total Overnight Costs (TOC)		**$1,830,436**	**$3,501**
TASC Multiplier	(IOU, high risk, 35 year)	1.140	
Total As-Spent Cost (TASC)		**$2,086,697**	**$3,991**

Exhibit 4-161 Case 2 D4C Initial and Annual O&M Expenses

INITIAL & ANNUAL O&M EXPENSES			
Case:	Case 2 D4C - GEE IGCC w/ two WGS (97% CO2 Capture)		
Plant Size (MWe):	522.89	**Heat Rate (Btu/kWh):**	10,840
Primary/Secondary Fuel:	Illinois #6 Bituminous Coal	**Fuel Cost ($/MM Btu):**	1.64
Design/Construction	5 years	**Book Life (yrs):**	30
TPC (Plant Cost) Year:	Jun 2007	**TPI Year:**	2015
Capacity Factor (%):	80	**CO_2 Captured (TPD):**	14,240

OPERATING & MAINTENANCE LABOR

Operating Labor

Operating Labor Rate (base):	$34.65	$/hour
Operating Labor Burden:	30.00	% of base
Labor Overhead Charge:	25.00	% of labor

Operating Labor Requirements per Shift:	units/mod.	Total Plant
Skilled Operator	2.0	2.0
Operator	10.0	10.0
Foreman	1.0	1.0
Lab Tech's etc.	3.0	3.0
TOTAL Operating Jobs	16.0	16.0

	Annual Costs $	Annual Costs $/kW-net
Annual Operating Labor Cost (calc'd)	$6,313,507	$12.074
Maintenance Labor Cost (calc'd)	$15,401,050	$29.454
Administrative & Support Labor (calc'd)	$5,428,639	$10.382
Property Taxes & Insurance	$29,762,975	$56.920
TOTAL FIXED OPERATING COSTS	**$56,906,172**	**$108.830**

VARIABLE OPERATING COSTS

	$	$/kWh-net
Maintenance Material Costs (calc'd)	**$29,033,099**	**0.00792**

Consumables	Consumption Initial	Consumption /Day	Unit Cost	Initial Cost	$	$/kWh-net
Water (/1000 gallons)	0	4,109	1.08	$0	$1,297,837	0.00035
Chemicals						
MU & WT Chem. (lbs)	0	24,480	0.17	$0	$1,237,142	0.00034
Carbon (Mercury Removal) (lb)	79,597	136	1.05	$83,590	$41,704	0.00001
COS Catalyst (m3)	0	0.00	2,397.36	$0	$0	0.00000
Water Gas Shift Catalyst (ft3)	6,232	4.27	498.83	$3,108,715	$621,743	0.00017
Selexol Solution (gal)	319,914	106	13.40	$4,286,284	$414,702	0.00011
SCR Catalyst (m3)	0	0	0.00	$0	$0	0.00000
Ammonia (19% NH3) (ton)	0	0	0.00	$0	$0	0.00000
Claus Catalyst (ft3)	0	2.01	131.27	$0	$77,019	0.00002
Subtotal Chemicals				**$7,478,589**	**$2,392,310**	**0.00065**
Other						
Supplemental Fuel (MMBtu)	0	0	0.00	$0	$0	0.00000
Gases, N2 etc. (/100scf)	0	0	0.00	$0	$0	0.00000
L.P. Steam (/1000 pounds)	0	0	0.00	$0	$0	0.00000
Subtotal Other				**$0**	**$0**	**0.00000**
Waste Disposal						
Spent Mercury Sorbent (lb)	0	136	0.42	$0	$16,679	0.00000
Flyash (ton)	0	0	0.00	$0	$0	0.00000
Slag (ton)	0	640	16.23	$0	$3,030,656	0.00083
Subtotal Solid Waste Disposal				**$0**	**$3,047,335**	**$0**
By-products & Emissions						
Sulfur (tons)	0	146	0.00	$0	$0	0.00000
Subtotal By-Products				**$0**	**$0**	**$0**
TOTAL VARIABLE OPERATING COSTS					**$35,770,582**	**0.00976**
Coal FUEL (tons)	**0**	**5,830**	**38.19**	**$0**	**$65,007,907**	**0.01774**

This page intentionally left blank

4.3.7 GEE IGCC Cost and Performance Summary

A summary of plant costs and performance for the GEE IGCC cases is shown in Exhibit 4-162.

Exhibit 4-162 Cost and Performance Results for the GEE IGCC Cases

Case	2-D1A	2-D1B	2-D2A	2-D2B	2-D2C	2-D2D	2-D3A	2-D3B	2-D3C	2-D3D	2-D3E	2-D4A	2-D4B	2-D4C
CO_2 Capture, %	0%	25%	25%	45%	60%	75%	25%	45%	60%	75%	85%	90%	95%	97%
Gross Power Output, MW_e	747.8	750.4	750.4	746.9	745.2	742.0	750.4	746.2	744.2	741.6	739.8	734.0	726.6	723.6
Net Power Output, MW_e	622.0	607.2	607.0	590.8	578.4	563.9	607.0	590.0	577.4	563.8	554.5	543.2	528.5	522.9
Net Plant Efficiency, % (HHV)	39.0	38.4	38.4	36.8	35.5	34.3	38.4	36.7	35.5	34.2	33.4	32.6	31.8	31.5
Net Plant Heat Rate, Btu/kWh (HHV)	8,756	8,891	8,895	9,283	9,604	9,958	8,894	9,289	9,614	9,969	10,222	10,459	10,731	10,840
Coal Flowrate (lb/hr)	466,861	462,752	462,861	470,117	476,133	481,355	462,783	469,844	475,867	481,779	485,836	487,026	486,169	485,856
Total CO_2 Captured, lb/MWh_{net}	NA	425	430	809	1,127	1,476	429	810	1,125	1,467	1,710	1,899	2,159	2,269
CO_2 Capture & Compression Cost, $x1000	0	$166,439	$166,741	$193,350	$212,092	$231,604	$167,196	$194,185	$212,378	$230,775	$242,919	$251,958	$264,505	$228,358
Total Plant Cost, $x1000	$1,235,944	$1,345,298	$1,346,066	$1,389,128	$1,419,771	$1,449,191	$1,346,380	$1,390,235	$1,419,640	$1,447,904	$1,465,871	$1,472,866	$1,483,871	$1,488,149
Owner's Costs, $x1000	$286,161	$308,679	$308,860	$319,113	$326,535	$333,624	$308,914	$319,358	$326,551	$333,508	$337,972	$338,851	$341,323	$342,287
Total Overnight Cost, $x1000	$1,522,105	$1,653,977	$1,654,925	$1,708,241	$1,746,306	$1,782,815	$1,655,294	$1,709,592	$1,746,192	$1,781,411	$1,803,843	$1,811,717	$1,825,194	$1,830,436
Total Overnight Cost, $/kW	$2,447	$2,724	$2,726	$2,891	$3,019	$3,161	$2,727	$2,897	$3,024	$3,160	$3,253	$3,335	$3,453	$3,501
Total As-Spent Capital, $x1000	$1,735,200	$1,885,534	$1,886,615	$1,947,394	$1,990,789	$2,032,409	$1,887,035	$1,948,935	$1,990,658	$2,030,809	$2,056,381	$2,065,358	$2,080,721	$2,086,697
Total As-Spent Capital, $/kW	$2,790	$3,105	$3,108	$3,296	$3,442	$3,604	$3,109	$3,303	$3,447	$3,602	$3,709	$3,802	$3,937	$3,991
CO_2 Capital Cost Penalty[a], $/kW	$0	$277	$279	$444	$572	$715	$280	$450	$577	$713	$806	$888	$1,007	$1,054
Cost of Electricity[b], mills/kWh	76.3	85.3	85.4	90.8	95.2	100.0	85.4	91.0	95.3	100.0	103.1	105.7	109.3	110.8
COE CO_2 Penalty[a], mills/kWh	NA	9.0	9.1	14.5	18.9	23.7	9.1	14.7	19.0	23.7	26.8	29.4	33.0	34.4
Percent increase in COE[a], %	NA	11.8%	11.9%	19.0%	24.7%	31.0%	12.0%	19.2%	24.9%	31.0%	35.1%	38.5%	43.3%	45.1%
Cost of CO_2 Avoided[a], $/tonne	NA	48.7	48.6	44.9	43.1	42.5	48.7	45.4	43.6	42.5	41.7	42.7	45.2	46.0
CO_2 Emissions, lb/MMBtu	196.8	147.8	147.3	108.8	78.9	49.7	147.3	108.8	79.2	49.7	30.1	19.7	10.4	6.5
CO_2 Emissions, lb/MWh_{net}	1,723	1,314	1,310	1,010	758	495	1,310	1,011	762	496	308	206	112	71
SO_2 Emissions, lb/MMBtu	0.005	0.002	0.002	0.002	0.002	0.002	0.002	0.002	0.002	0.002	0.002	0.002	0.002	0.002
SO_2 Emissions, lb/MWh	0.040	0.020	0.020	0.020	0.020	0.020	0.020	0.020	0.020	0.020	0.020	0.020	0.020	0.020
NOx Emissions, lb/MMBtu	0.059	0.055	0.055	0.053	0.051	0.050	0.055	0.053	0.052	0.050	0.049	0.049	0.049	0.049
NOx Emissions, lb/MWh	0.430	0.397	0.397	0.390	0.384	0.379	0.397	0.391	0.385	0.379	0.375	0.376	0.380	0.382
PM Emissions, lb/MMBtu	0.0071	0.0071	0.0071	0.0071	0.0071	0.0071	0.0071	0.0071	0.0071	0.0071	0.0071	0.0071	0.0071	0.0071
PM Emissions, lb/MWh	0.052	0.051	0.051	0.052	0.053	0.054	0.051	0.052	0.053	0.054	0.054	0.055	0.055	0.056
Hg Emissions, lb/TBtu	0.571	0.571	0.571	0.571	0.571	0.571	0.571	0.571	0.571	0.571	0.571	0.571	0.571	0.571
Hg Emissions, lb/TWh	4.16	4.11	4.11	4.20	4.26	4.32	4.11	4.20	4.26	4.33	4.38	4.42	4.46	4.48
Raw Water Withdrawal, gpm	4,734	4,692	4,697	5,038	5,300	5,530	4,695	5,040	5,307	5,569	5,748	5,817	5,739	5,707
Raw Water Consumption, gpm	3,755	3,722	3,727	4,033	4,270	4,481	3,725	4,034	4,276	4,514	4,677	4,741	4,679	4,654
Raw Water Consumption, gal/MWh_{net}	362	368	368	410	443	477	368	410	444	480	506	524	531	534

a Relative to Case 2 D1A (IGCC 0% CO_2 capture)
b Capacity factor is 80% for the GEE IGCC cases

This page intentionally left blank

5. Results

The objective of this study was to identify the optimal CO_2 capture level at new SC PC and IGCC power plants by employing state-of-the-art control technologies in multiple process configurations. The SC PC cases (Case 1) utilize Fluor's Econamine FG Plus^{SM} process for post-combustion CO_2 capture, while the IGCC cases (Case 2) employ a slurry-fed, entrained-flow GEE gasifier and leverage UOP's two-stage Selexol™ process for pre-combustion CO_2 capture.

The major results from the CO_2 capture sensitivity analysis are discussed below in the following order:

- Performance (efficiency)
- Economics (total overnight cost, cost of electricity, and CO_2 avoided cost)
- Performance and Cost summary

5.2 Performance

5.2.1 Energy Efficiency

The net plant HHV efficiencies for the SC PC and GEE IGCC cases are presented in Exhibit 5-1 and Exhibit 5-2, respectively. As the CO_2 capture requirement is increased for either plant type, PC or IGCC, there is an increase in the auxiliary power required to support the capture equipment (either Econamine or Selexol™) and the CO_2 compressor trains. Further, more steam is consumed by the capture equipment, and by the WGS reactor(s) in the IGCC case, making less available for supply to the steam turbine. Both effects (higher auxiliary load and reduced steam supply to the turbine) detract from the net power produced by the plant per unit of coal energy input, as evidenced by the predicted net plant HHV efficiency trends versus CO_2 capture level.

Exhibit 5-1 Net Plant HHV Efficiency for the Supercritical PC Cases

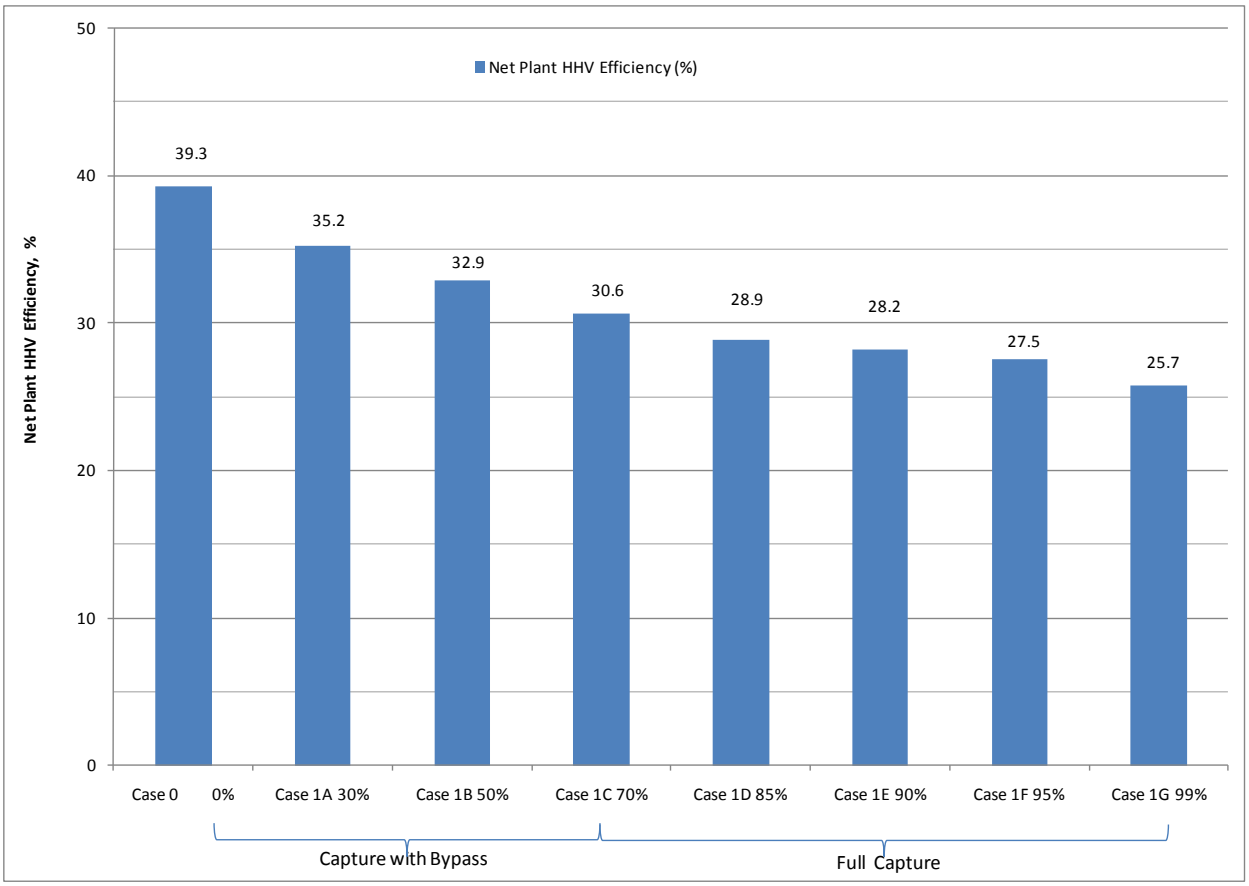

Exhibit 5-2 Net Plant HHV Efficiency for the GEE IGCC Cases

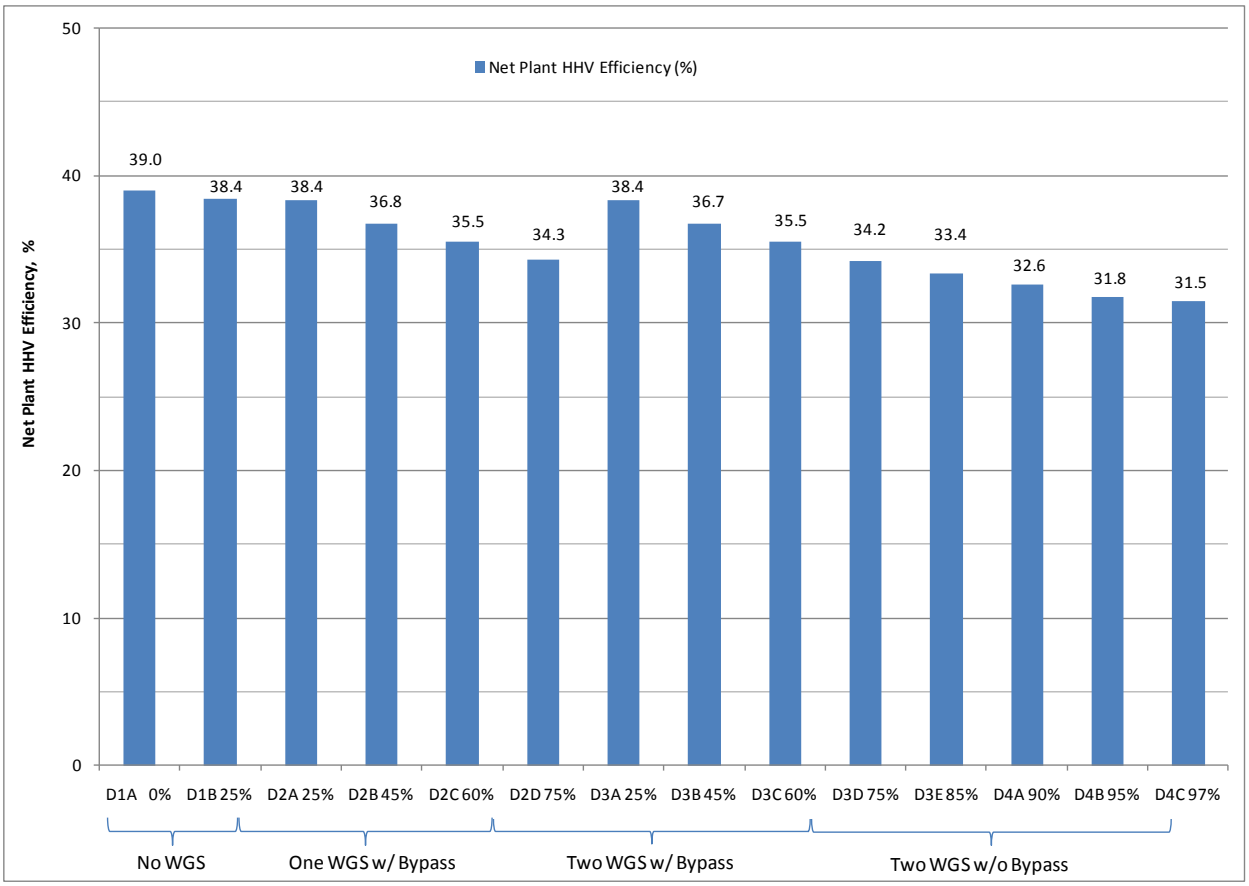

5.3 Economics

5.3.1 Total Overnight Cost

All capital costs are presented as "overnight costs" expressed in June 2007 dollars. The capital costs are presented at the TOC level, which includes: (1) equipment (complete with initial chemical and catalyst loadings); (2) materials; (3) labor (direct and indirect); (4) engineering and construction management; (5) contingencies (process and project); and (6) owner's costs. The owner's costs, which are summarized in Exhibit 2-18, include preproduction costs, inventory capital, land costs, financing costs, initial cost for catalysts/chemicals, taxes and insurances, and other owner's costs.

The TOC for the SC PC and GEE IGCC cases are presented in Exhibit 5-3 and Exhibit 5-4, respectively. These exhibits categorized the TOC into five categories: (1) bare erected cost; (2) engineering, home office, CM, and fee; (3) project contingency; (4) process contingency; and (5) owner's costs.

The SC PC Case 1 TOC estimates apply to facilities designed with a fixed 550 MW net capacity. As the design is equipped for increased CO_2 capture, moving from Case 1A through Case 1G, the TOC also increases as a result of the need for larger power plant components for power generation to offset the auxiliary power and steam requirements of the CO_2 capture and compression systems. Hence, the increase in installed TOC per net kW delivered.

Exhibit 5-3 TOC for the Supercritical PC Cases

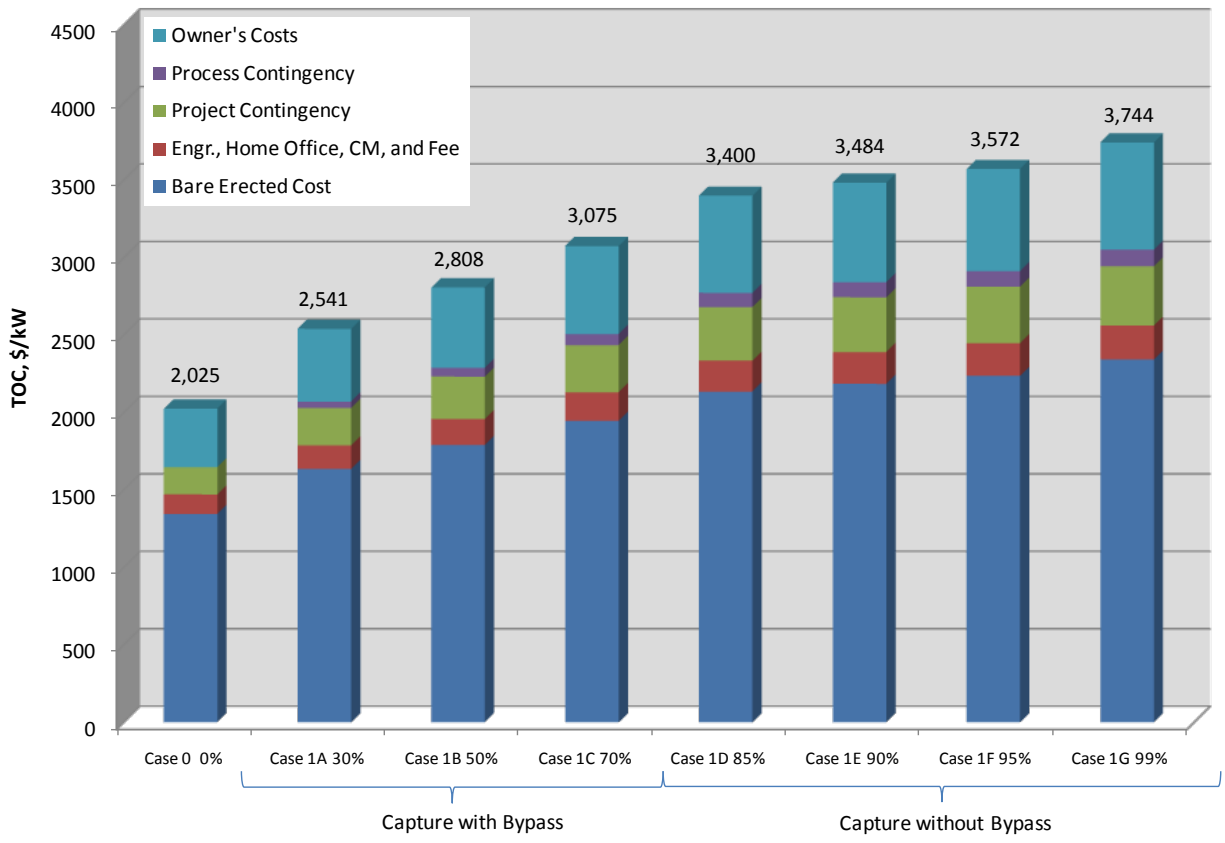

The Case 2 GEE IGCC TOC estimates apply to facilities designed with a fixed gross combustion turbine capacity of 464 MW. As the plant is equipped for increased CO_2 capture, moving from Case 2 D1A through Case 2 D4C, the TOC also increases as a result of the need for larger plant components for power generation to offset the auxiliary power and steam requirements of the WGS reactor(s) and the CO_2 capture and compression systems. Hence, the increase in installed TOC per net kW delivered.

Exhibit 5-4 TOC for the GEE IGCC Cases

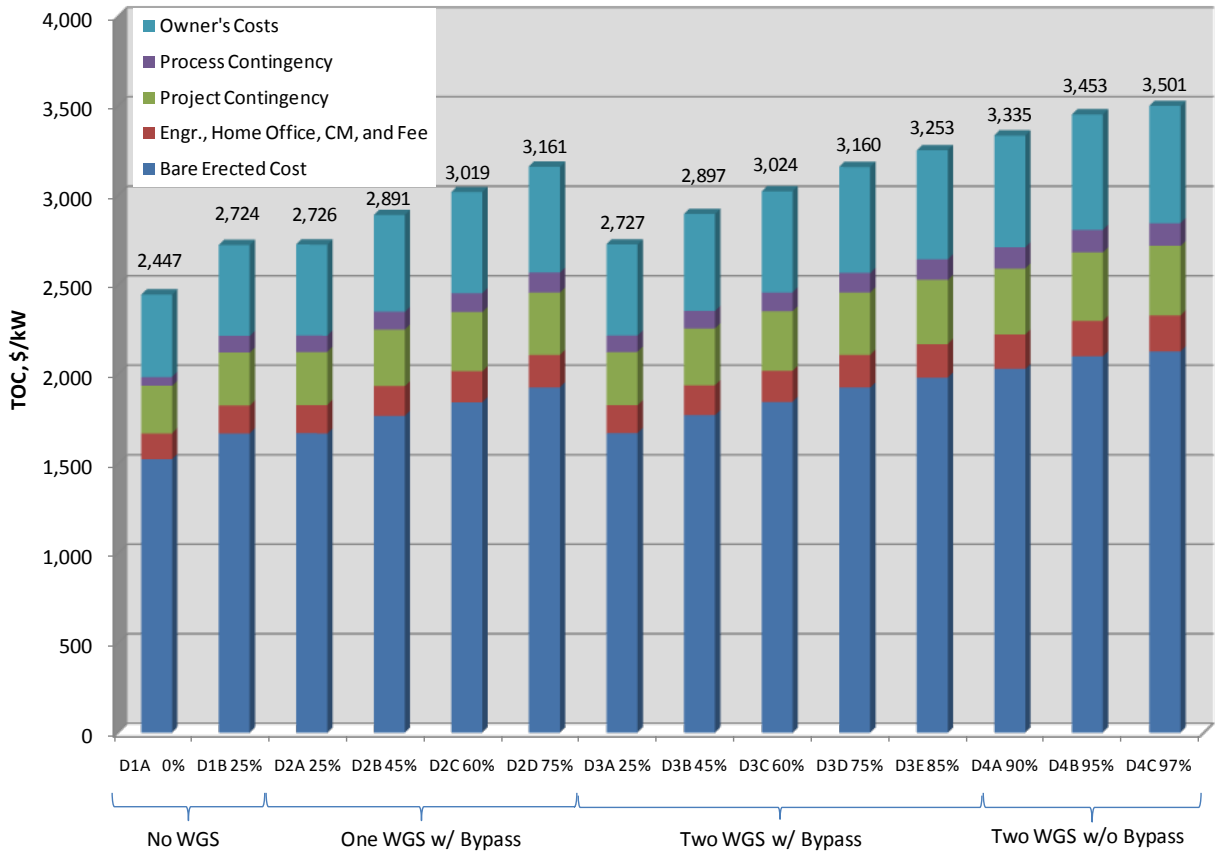

5.3.2 Cost of Electricity

The revenue requirement figure-of-merit in this report is COE expressed in mills/kWh (numerically equivalent to $/MWh). The capital expenditure and operating periods for SC PC and IGCC power plants are 5 and 30 years, respectively. The costs associated with CO_2 TS&M are included for all capture cases. All costs are expressed in June 2007 dollars, and the resulting COE is also expressed in June 2007 year dollars.

The COE for the SC PC and GEE IGCC cases are presented in Exhibit 5-5 and Exhibit 5-6, respectively. These exhibits categorized the COE into five categories: (1) capital costs; (2) fixed costs; (3) variable costs; (4) fuel costs; and (5) CO_2 TS&M costs.

The COE estimates are based on capacity factors of 85 and 80 percent for the SC PC and GEE IGCC cases, respectively.

Exhibit 5-5 COE for the Supercritical PC Cases

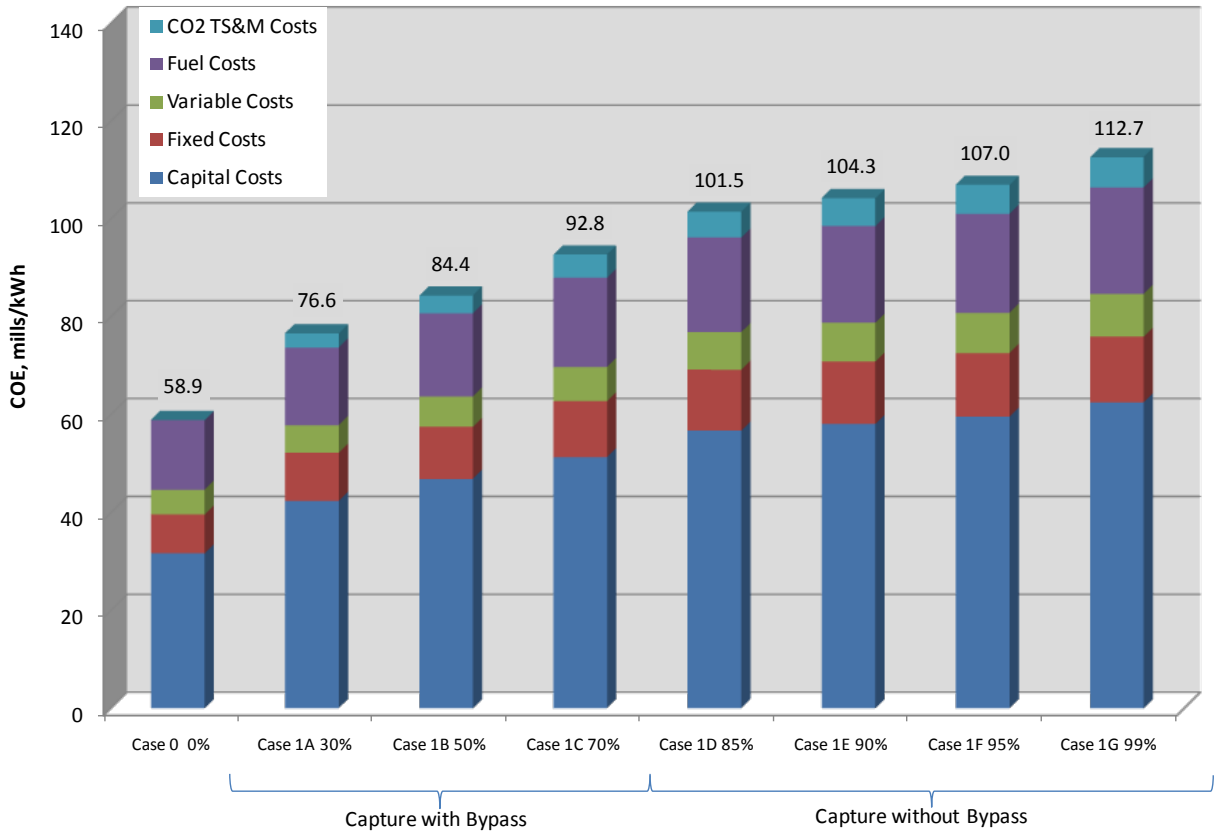

Exhibit 5-6 COE for the GEE IGCC Cases

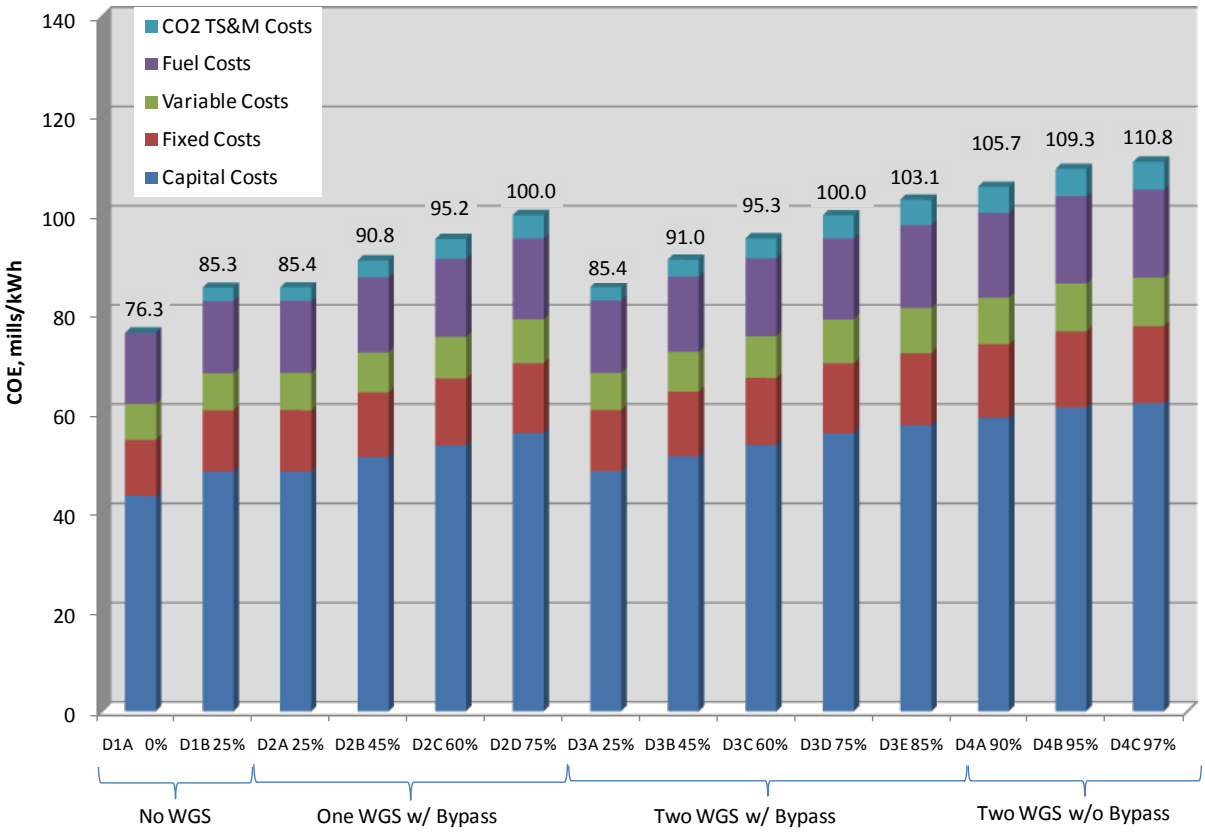

The CO_2 TS&M costs were developed using reference data and scaled estimates, as discussed in Section 2.7. In general, the CO_2 TS&M costs account for about two to three percent of the total COE. A breakdown of the CO_2 TS&M costs for the SC PC and GEE IGCC cases are shown in Exhibit 5-7 and Exhibit 5-8, respectively.

Exhibit 5-7 CO_2 TS&M COE for the Supercritical PC Cases

Study Case (CO_2 Capture Level)	mills/kWh				
	CO_2 Transport	CO_2 Storage	CO_2 Monitoring	TS&M COE	**Total COE**
Case 1A (30%)	1.84	0.77	0.30	2.92	76.64
Case 1B (50%)	2.06	1.04	0.55	3.64	84.38
Case 1C (70%)	2.55	1.38	0.82	4.75	92.75
Case 1D (85%)	2.55	1.64	1.05	5.24	101.49
Case 1E (90%)	2.83	1.74	1.14	5.71	104.29
Case 1F (95%)	2.83	1.84	1.24	5.91	107.00
Case 1G (99%)	2.83	1.99	1.38	6.20	112.65

Exhibit 5-8 CO_2 TS&M COE for the GEE IGCC Cases

Study Case (CO_2 Capture Level)	mills/kWh				
	CO_2 Transport	CO_2 Storage	CO_2 Monitoring	TS&M COE	**Total COE**
Case 2 D1A (0%)	0.00	0.00	0.00	0.00	76.31
Case 2 D1B (25%)	1.77	0.67	0.23	2.67	85.35
Case 2 D2A (25%)	1.78	0.67	0.23	2.68	85.41
Case 2 D2B (45%)	2.03	0.90	0.43	3.36	90.83
Case 2 D2C (60%)	2.31	1.08	0.59	3.98	95.16
Case 2 D2D (75%)	2.64	1.28	0.76	4.68	99.98
Case 2 D3A (25%)	1.78	0.67	0.23	2.68	85.43
Case 2 D3B (45%)	2.04	0.90	0.43	3.36	90.99
Case 2 D3C (60%)	2.32	1.09	0.59	3.99	95.31
Case 2 D3D (75%)	2.64	1.28	0.76	4.68	99.96
Case 2 D3E (85%)	2.68	1.48	0.89	5.05	103.08
Case 2 D4A (90%)	2.74	1.57	0.96	5.27	105.70
Case 2 D4B (95%)	2.82	1.67	1.04	5.53	109.32
Case 2 D4C (97%)	2.85	1.72	1.07	5.63	110.75

5.3.3 CO_2 Avoided Costs

The CO_2 avoided cost was calculated as illustrated in Equation 1.

$$(1) \qquad Avoided\ \ Cost = \frac{\{COE_{with\ removal} - COE_{reference}\}\ \$/MWh}{\{CO_2 Emissions_{reference} - CO_2 Emissions_{with\ removal}\}\ tonnes/MWh}$$

The CO_2 avoided costs for the SC PC and GEE IGCC cases are presented in Exhibit 5-9 and Exhibit 5-10, respectively. The IGCC cases are presented both relative to the equivalent IGCC without carbon capture and SC PC without capture plants. For the SC PC plant, the CO_2 avoided costs decrease as the CO_2 capture level increases until reaching minimum values at 95 percent capture (Case 1F).

Exhibit 5-9 CO_2 Avoided Costs for the Supercritical PC Cases

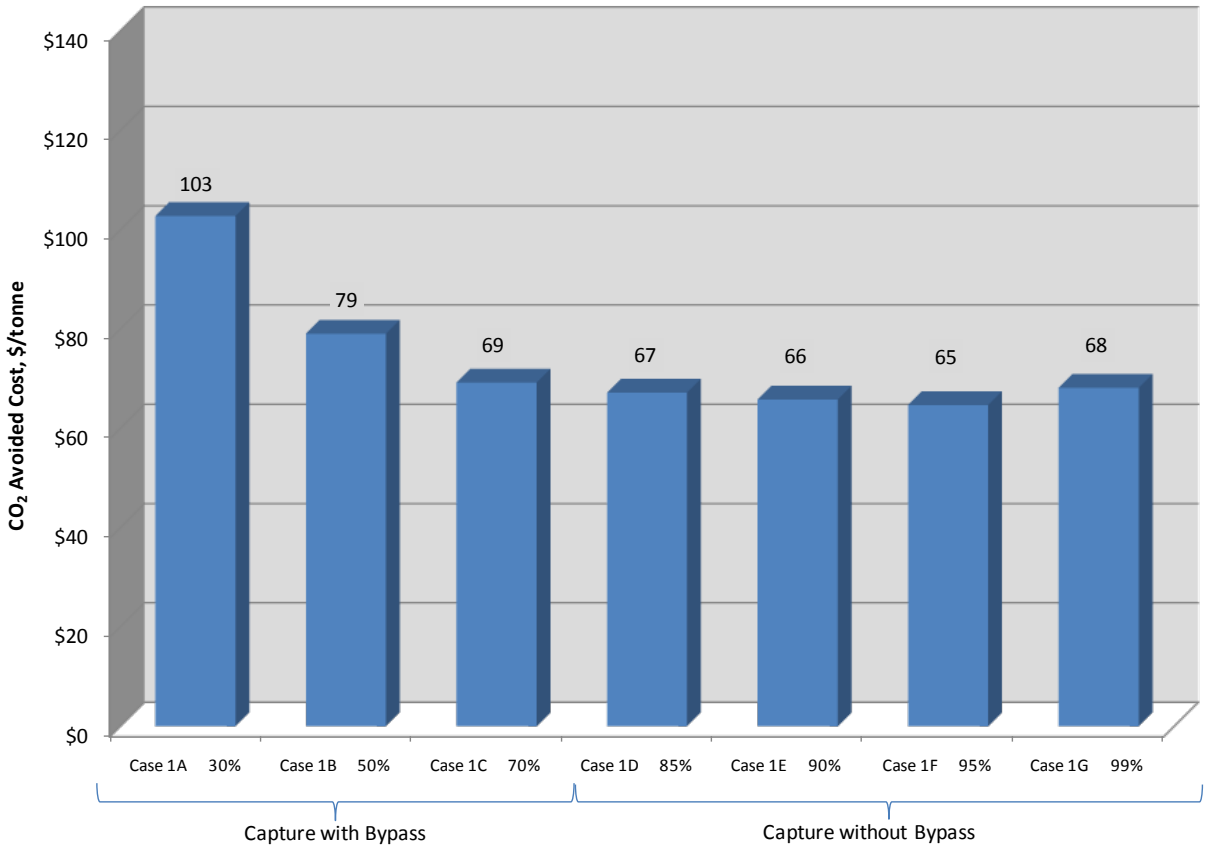

The CO_2 avoided costs for the GEE IGCC cases decrease as the CO_2 capture level increases, until reaching minimum values at 85 to 90 percent capture (Cases D3E and D4A). As a result, this analysis concludes that 85 to 90 percent is the optimal CO_2 capture level for a GEE IGCC power plant.

Exhibit 5-10 CO_2 Avoided Costs for the GEE IGCC Cases

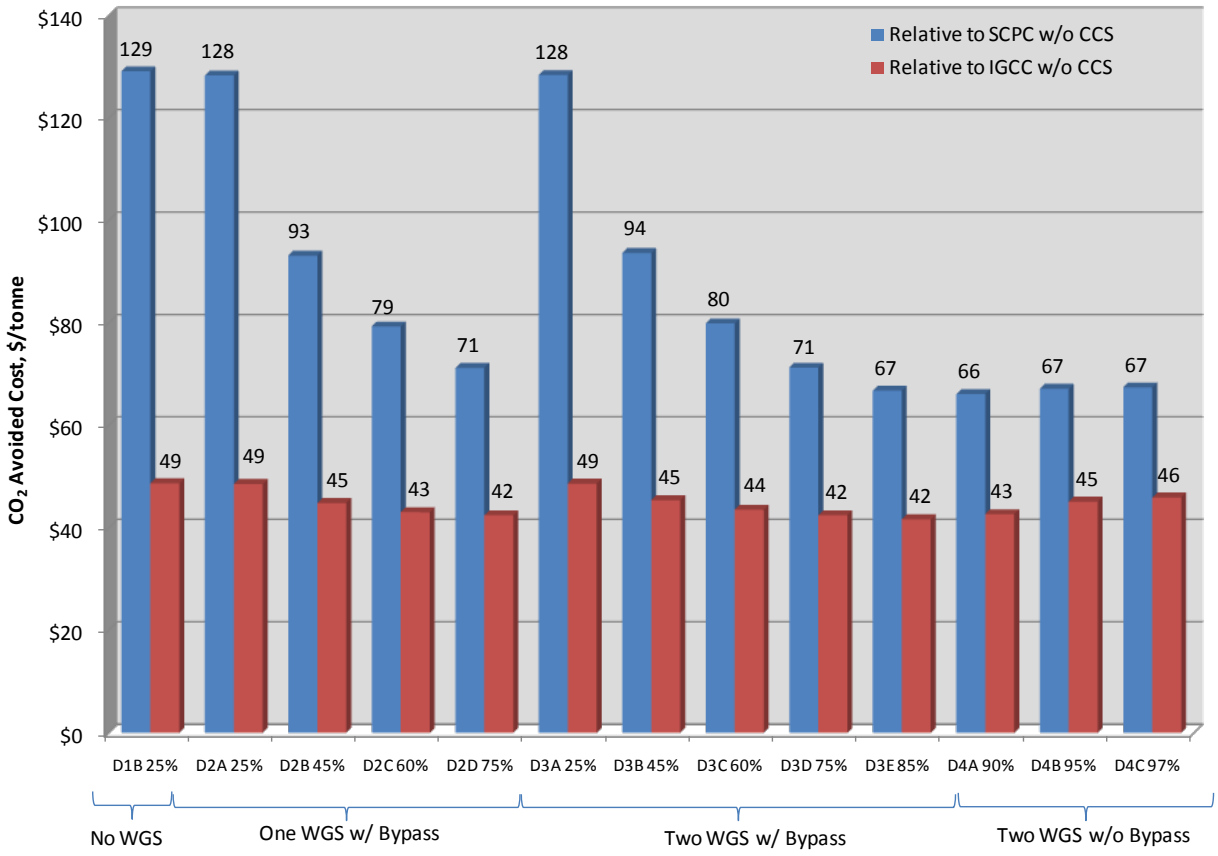

5.4 Cost and Performance Summary

The following conclusions can be drawn from this analysis.

5.4.1 Supercritical PC Cases

- The 'slip-stream' approach is more cost-effective for <90 percent CO_2 capture than removing reduced CO_2 fractions from the entire flue gas stream. The cost of CO_2 capture with the Econamine process is dependent on the volume of gas being treated and a reduction in flue gas flow rate will: (1) decrease the quantity of energy consumed by flue gas blowers; (2) reduce the size of the CO_2 absorption columns; (3) trim the cooling water requirement of the direct contact cooling system; and (4) decrease the amount of fan power required to increase flue gas temperature and plume buoyancy.

- With partial bypass around the Econamine system, CO_2 capture is limited to 85 percent. To achieve 90 percent or greater CO_2 capture, the entire flue gas stream must be treated.

- On a \$/tonne CO_2 avoided basis, 95 percent (Case 1F) is the optimal CO_2 capture level.

5.4.2 GEE IGCC Cases

- For the GEE gasifier, CO_2 capture is limited to 25 percent without WGS.
- Due to the high level of integration between the H_2S and CO_2 absorbers in the two-stage Selexol™ system (see Exhibit 4-8), it is assumed in this analysis that it is not possible to operate the two stages independently, and therefore is not feasible to model 0 percent CO_2 capture with this system. Since the first stage is designed to operate synergistically with the second, some level of CO_2 removal is unavoidable.
- With a S:DG ratio of 0.25, CO_2 capture is limited to: (1) 75 percent with one-stage WGS; and (2) 85 percent with two-stage WGS and five percent WGS bypass.
- For 90 percent or greater CO_2 capture, two WGS reactors without bypass and a S:DG ratio of 0.3 are required.
- The performance and cost for intermediate levels of CO_2 capture (25 to 75 percent) are similar with one- and two-stage WGS. The two-stage WGS system requires more shift steam for the two reactors, but the one-stage WGS system requires a larger COS hydrolysis unit to treat the entire syngas stream, which adds capital cost.
- On a \$/tonne CO_2 avoided basis, 85 to 90 percent is the optimal CO_2 capture level.

5.4.3 SCPC and IGCC Comparisons

The following conclusions can be drawn from this analysis.

- At all levels of carbon capture considered in this analysis, an IGCC plant will operate more efficiently than a SC PC plant. This higher efficiency results in lower fuel costs and reduced coal handling costs for the same level of power output.
- At lower levels of CO_2 capture, the COE of a SC PC plant is less than an IGCC plant. However this COE advantage begins to disappear as capture level increases. For CCS greater than approximately 90 percent, IGCC and SC PC have costs of electricity that are nearly equal. This same trend applies to plant capital costs (expressed in \$/kW).
- CO_2 avoided costs, using analogous non-capture plants as reference, are substantially lower for IGCC than for SC PC, for all levels of capture. This is reflective of the relatively lower cost impact associated with adding CO_2 controls to an IGCC plant compared to SC PC. However, the avoided CO_2 costs for IGCC capture plants, using the SC PC non-capture reference plant, are higher due to the higher COE of non-capture IGCC plants.
- CO_2 avoided costs for SC PC plants are high for low levels of CCS, and then start to diminish as the capture increases. Gradually, a minimum is reached around 95% CCS, before costs start to rise again slightly. This suggests that if a SC PC plant will lay out

the additional capital required to install CO_2 controls, that equipment could be used most cost-effectively by capturing as much carbon dioxide as possible (up to about 95%).

- CO_2 avoided costs for IGCC (relative to an IGCC non-capture plant) are less volatile than SC PC over a wide range of capture. Although they generally decrease as the level of CCS increases (similar to SC PC), the spread between the high and low values is small relative to SC PC. Since an IGCC system is a more complex process, it better lends itself to optimization than a SC PC plant. To accommodate the specified level of CO_2 capture, there were numerous variables that were manipulated simultaneously (including the number of water gas shift reactors, the amount of shift steam required, solvent circulation rate, and the syngas bypass rate) to minimize the cost and performance impact. The SC PC plant, although in most cases less expensive than IGCC, is a simpler process and therefore exhibits less potential for optimization.

A summary of SC PC and GEE IGCC plant costs and performance are shown in Exhibit 5-11 and Exhibit 5-12, respectively.

Exhibit 5-11 Cost and Performance Results for the Supercritical PC Cases

Case	0	1A	1B	1C	1D	1E	1F	1G
CO_2 Capture, %	0%	30%	50%	70%	85%	90%	95%	99%
Gross Power Output, MW_e	580.4	601.5	618.2	637.8	654.8	661.3	667.9	679.6
Net Power Output, MW_e	550.0	550.0	550.0	550.0	550.1	550.0	550.0	550.0
Net Plant Efficiency, % (HHV)	39.3	35.2	32.9	30.6	28.9	28.2	27.5	25.7
Net Plant Heat Rate, Btu/kWh (HHV)	8,687	9,695	10,379	11,151	11,819	12,083	12,400	13,269
Coal Flowrate (lb/hr)	409,550	457,066	489,316	525,764	557,283	569,672	584,578	625,561
Total CO_2 Captured, lb/MWh_{net}	NA	588	1,057	1,582	2,037	2,213	2,398	2,674
CO_2 Capture & Compression Cost, $x1000	NA	$190,138	$266,902	$336,794	$441,781	$463,389	$485,273	$516,797
Total Plant Cost, $x1000	$905,901	$1,138,688	$1,258,942	$1,378,696	$1,525,453	$1,562,889	$1,602,389	$1,678,914
Owner's Costs, $x1000	$207,800	$258,649	$285,448	$312,458	$344,744	$353,249	$362,267	$380,090
Total Overnight Cost, $x1000	$1,113,701	$1,397,338	$1,544,390	$1,691,155	$1,870,197	$1,916,138	$1,964,657	$2,059,004
Total Overnight Cost, $/kW	$2,025	$2,541	$2,808	$3,075	$3,400	$3,484	$3,572	$3,744
Total As-Spent Capital, $x1000	$1,262,937	$1,592,965	$1,760,604	$1,927,917	$2,132,024	$2,184,397	$2,239,708	$2,347,264
Total As-Spent Capital, $/kW	$2,296	$2,896	$3,201	$3,505	$3,876	$3,972	$4,072	$4,268
CO_2 Capital Cost Penalty[a], $/kW	NA	$516	$783	$1,050	$1,375	$1,459	$1,548	$1,719
Cost of Electricity[b], mills/kWh	58.90	76.64	84.38	92.75	101.49	104.29	107.00	112.65
COE CO_2 Penalty[a], mills/kWh	NA	17.7	25.5	33.8	42.6	45.4	48.1	53.8
Percent increase in COE[a], %	NA	30.1	43.3	57.5	72.3	77.1	81.7	91.3
Cost of CO_2 Avoided[a], $/tonne	NA	102.8	79.1	69.2	67.2	65.9	64.7	68.2
CO2 Emissions, lb/MMBtu	203.2	142.9	101.7	61.7	31.2	20.4	10.2	2.0
CO_2 Emissions, lb/MWh_{net}	1,765	1,385	1,055	687	369	246	126	27
SO_2 Emissions, lb/MMBtu	0.086	0.064	0.050	0.036	0.017	0.017	0.016	0.016
SO_2 Emissions, lb/MWh	0.75	0.570	0.460	0.340	0.170	0.170	0.170	0.170
NOx Emissions, lb/MMBtu	0.070	0.070	0.070	0.070	0.070	0.070	0.070	0.070
NOx Emissions, lb/MWh	0.608	0.621	0.646	0.673	0.695	0.703	0.715	0.752
PM Emissions, lb/MMBtu	0.013	0.013	0.013	0.013	0.013	0.013	0.013	0.013
PM Emissions, lb/MWh	0.113	0.115	0.120	0.125	0.129	0.131	0.133	0.140
Hg Emissions, lb/TBtu	1.14	1.14	1.14	1.14	1.14	1.14	1.14	1.14
Hg Emissions, lb/TWh	9.93	10.1	10.6	11.0	11.3	11.5	11.7	12.3
Raw Water Withdrawal, gpm	5,394	6,245	6,987	8,386	9,615	10,095	10,512	11,664
Raw Water Consumption, gpm	4,301	4,898	5,433	6,474	7,392	7,753	8,074	8,961
Raw Water Consumption, gal/MWh_{net}	469	534	593	706	806	846	881	978

a Relative to Case 0 (SC PC without capture from *2010 Bituminous Baseline* study)

b Capacity factor is 85% for the SC PC cases

Exhibit 5-12 Cost and Performance Results for the GEE IGCC Cases

Case	2-D1A	2-D1B	2-D2A	2-D2B	2-D2C	2-D2D	2-D3A	2-D3B	2-D3C	2-D3D	2-D3E	2-D4A	2-D4B	2-D4C
CO_2 Capture, %	0%	25%	25%	45%	60%	75%	25%	45%	60%	75%	85%	90%	95%	97%
Gross Power Output, MW_e	747.8	750.4	750.4	746.9	745.2	742.0	750.4	746.2	744.2	741.6	739.8	734.0	726.6	723.6
Net Power Output, MW_e	622.0	607.2	607.0	590.8	578.4	563.9	607.0	590.0	577.4	563.8	554.5	543.2	528.5	522.9
Net Plant Efficiency, % (HHV)	39.0	38.4	38.4	36.8	35.5	34.3	38.4	36.7	35.5	34.2	33.4	32.6	31.8	31.5
Net Plant Heat Rate, Btu/kWh (HHV)	8,756	8,891	8,895	9,283	9,604	9,958	8,894	9,289	9,614	9,969	10,222	10,459	10,731	10,840
Coal Flowrate (lb/hr)	466,861	462,752	462,861	470,117	476,133	481,355	462,783	469,844	475,867	481,779	485,836	487,026	486,169	485,856
Total CO_2 Captured, lb/MWh_{net}	0	425	430	809	1,127	1,476	429	810	1,125	1,467	1,710	1,899	2,159	2,269
CO_2 Capture & Compression Cost, $x1000	0	$166,439	$166,741	$193,350	$212,092	$231,604	$167,196	$194,185	$212,378	$230,775	$242,919	$251,958	$264,505	$228,358
Total Plant Cost, $x1000	$1,235,944	$1,345,298	$1,346,066	$1,389,128	$1,419,771	$1,449,191	$1,346,380	$1,390,235	$1,419,640	$1,447,904	$1,465,871	$1,472,866	$1,483,871	$1,488,149
Owner's Costs, $x1000	$286,161	$308,679	$308,860	$319,113	$326,535	$333,624	$308,914	$319,358	$326,551	$333,508	$337,972	$338,851	$341,323	$342,287
Total Overnight Cost, $x1000	$1,522,105	$1,653,977	$1,654,925	$1,708,241	$1,746,306	$1,782,815	$1,655,294	$1,709,592	$1,746,192	$1,781,411	$1,803,843	$1,811,717	$1,825,194	$1,830,436
Total Overnight Cost, $/kW	$2,447	$2,724	$2,726	$2,891	$3,019	$3,161	$2,727	$2,897	$3,024	$3,160	$3,253	$3,335	$3,453	$3,501
Total As-Spent Capital, $x1000	$1,735,200	$1,885,534	$1,886,615	$1,947,394	$1,990,789	$2,032,409	$1,887,035	$1,948,935	$1,990,658	$2,030,809	$2,056,381	$2,065,358	$2,080,721	$2,086,697
Total As-Spent Capital, $/kW	$2,790	$3,105	$3,108	$3,296	$3,442	$3,604	$3,109	$3,303	$3,447	$3,602	$3,709	$3,802	$3,937	$3,991
CO_2 Capital Cost Penalty[a], $/kW	$0	$277	$279	$444	$572	$715	$280	$450	$577	$713	$806	$888	$1,007	$1,054
Cost of Electricity[b], mills/kWh	76.3	85.3	85.4	90.8	95.2	100.0	85.4	91.0	95.3	100.0	103.1	105.7	109.3	110.8
COE CO_2 Penalty[a], mills/kWh	0.0	9.0	9.1	14.5	18.9	23.7	9.1	14.7	19.0	23.7	26.8	29.4	33.0	34.4
Percent increase in COE[a], %	NA	11.8%	11.9%	19.0%	24.7%	31.0%	12.0%	19.2%	24.9%	31.0%	35.1%	38.5%	43.3%	45.1%
Cost of CO_2 Avoided[a], $/tonne	NA	48.7	48.6	44.9	43.1	42.5	48.7	45.4	43.6	42.5	41.7	42.7	45.2	46.0
CO2 Emissions, lb/MMBtu	196.8	147.8	147.3	108.8	78.9	49.7	147.3	108.8	79.2	49.7	30.1	19.7	10.4	6.5
CO_2 Emissions, lb/MWh_{net}	1,723	1,314	1,310	1,010	758	495	1,310	1,011	762	496	308	206	112	71
SO_2 Emissions, lb/MMBtu	0.005	0.002	0.002	0.002	0.002	0.002	0.002	0.002	0.002	0.002	0.002	0.002	0.002	0.002
SO_2 Emissions, lb/MWh	0.040	0.020	0.020	0.020	0.020	0.020	0.020	0.020	0.020	0.020	0.020	0.020	0.020	0.020
NOx Emissions, lb/MMBtu	0.059	0.055	0.055	0.053	0.051	0.050	0.055	0.053	0.052	0.050	0.049	0.049	0.049	0.049
NOx Emissions, lb/MWh	0.430	0.397	0.397	0.390	0.384	0.379	0.397	0.391	0.385	0.379	0.375	0.376	0.380	0.382
PM Emissions, lb/MMBtu	0.0071	0.0071	0.0071	0.0071	0.0071	0.0071	0.0071	0.0071	0.0071	0.0071	0.0071	0.0071	0.0071	0.0071
PM Emissions, lb/MWh	0.052	0.051	0.051	0.052	0.053	0.054	0.051	0.052	0.053	0.054	0.054	0.055	0.055	0.056
Hg Emissions, lb/TBtu	0.571	0.571	0.571	0.571	0.571	0.571	0.571	0.571	0.571	0.571	0.571	0.571	0.571	0.571
Hg Emissions, lb/TWh	4.16	4.11	4.11	4.20	4.26	4.32	4.11	4.20	4.26	4.33	4.38	4.42	4.46	4.48
Raw Water Withdrawal, gpm	4,734	4,697	4,700	5,039	5,301	5,531	4,701	5,048	5,308	5,571	5,749	5,818	5,740	5,708
Raw Water Consumption, gpm	3,755	3,726	3,729	4,034	4,271	4,482	3,729	4,040	4,277	4,515	4,678	4,742	4,680	4,655
Raw Water Consumption, gal/MWh_{net}	362	368	369	410	443	477	369	411	444	480	506	524	531	534

a Relative to Case 0 (GEE IGCC without capture from *2010 Bituminous Baseline* study)

b Capacity factor is 80% for the GEE IGCC cases

Appendix A

As part of this study, various cost curves and algorithms were generated as a function of the CO_2 capture level. The algorithms can be used to estimate and predict the cost of CO_2 capture over a full range of removal efficiencies. The following figures present the results of this effort for both the SC PC and GEE IGCC cases.

Supercritical PC Cost Algorithms

Appendix A- 1 Supercritical PC CO_2 Capture & Compression Cost, $000

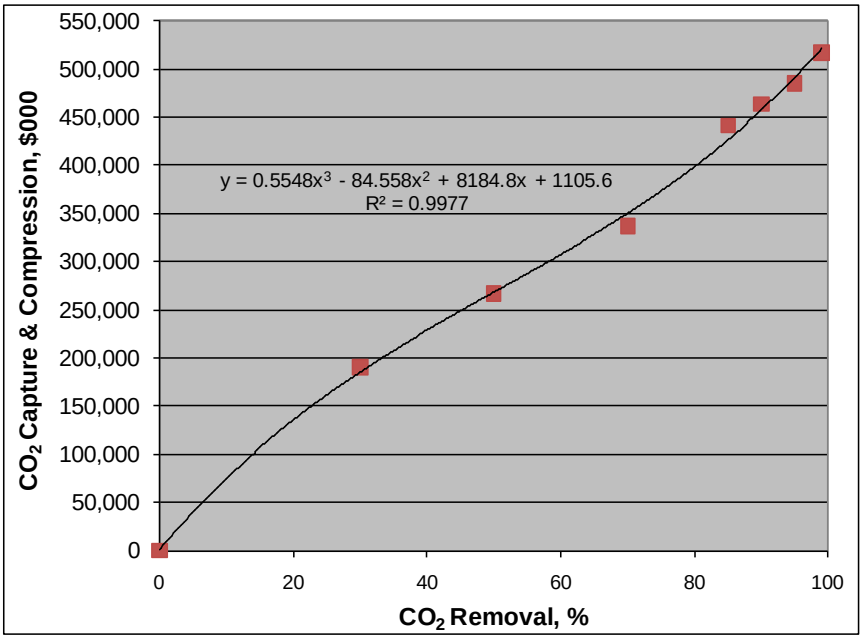

Appendix A- 2 Supercritical PC CO_2 Capture & Compression Cost, $/kW

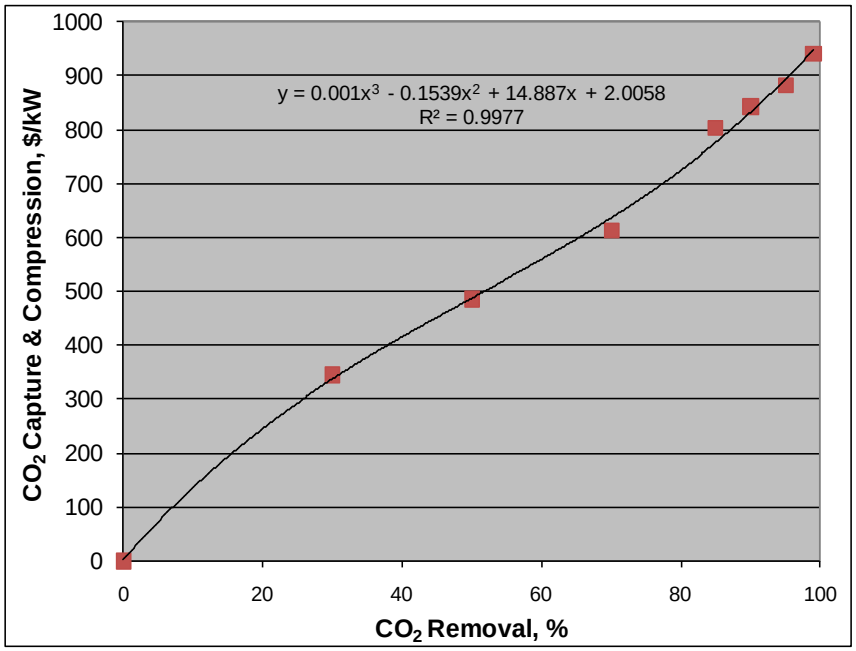

Appendix A- 3 Supercritical PC Total Overnight Cost, $000

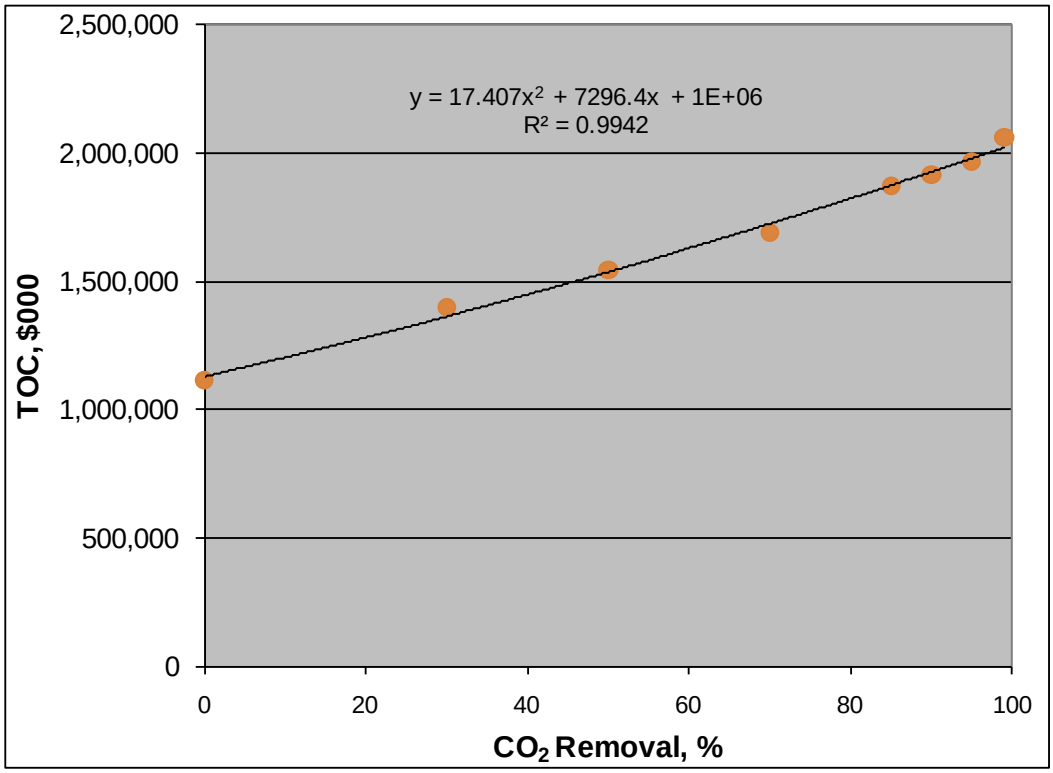

Appendix A- 4 Supercritical PC Total Overnight Cost, $/kW

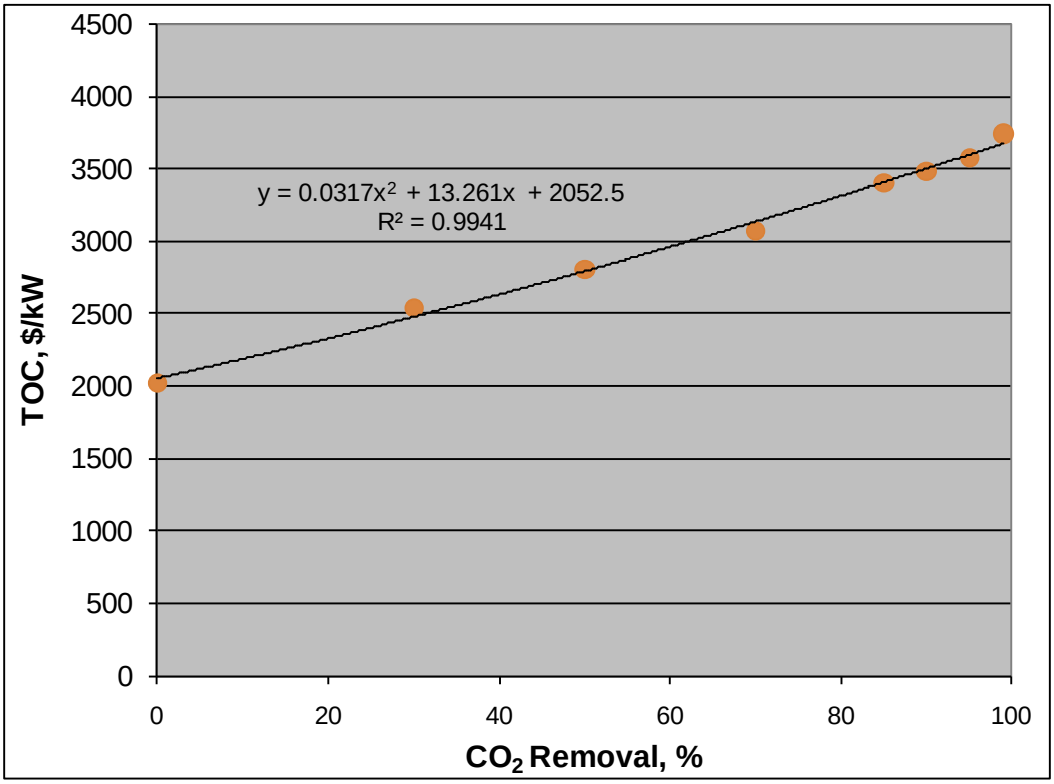

Appendix A- 5 Supercritical PC Incremental Capital Cost, $000

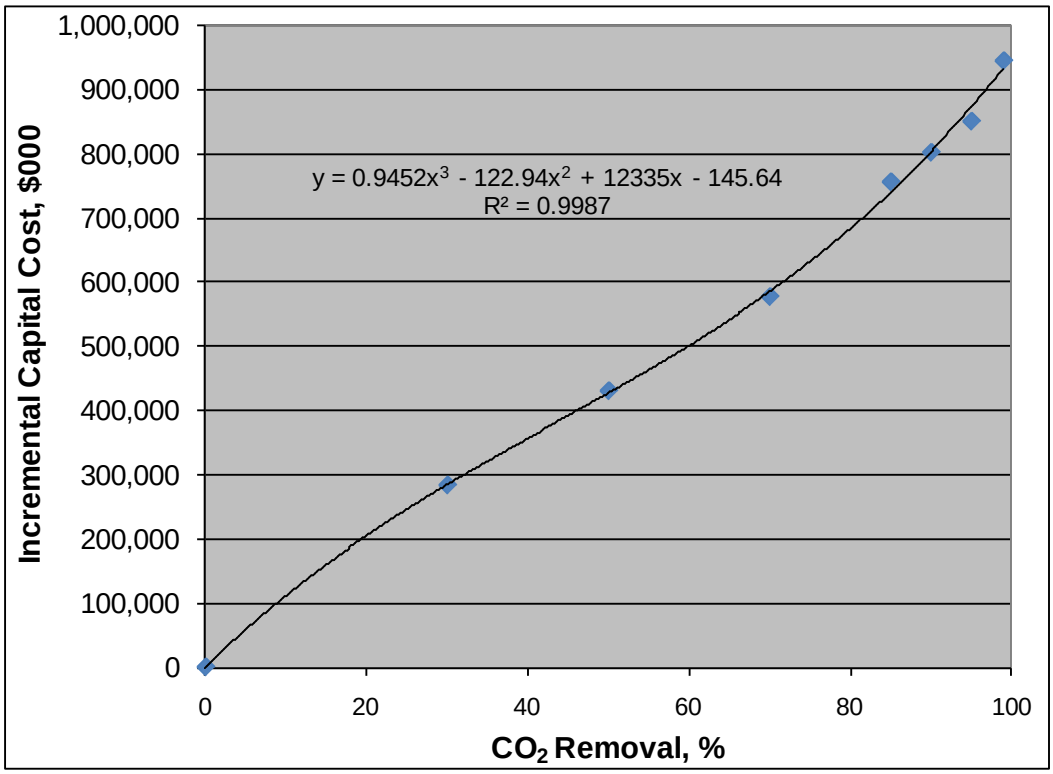

Appendix A- 6 Supercritical PC Incremental Capital Cost, $/kW

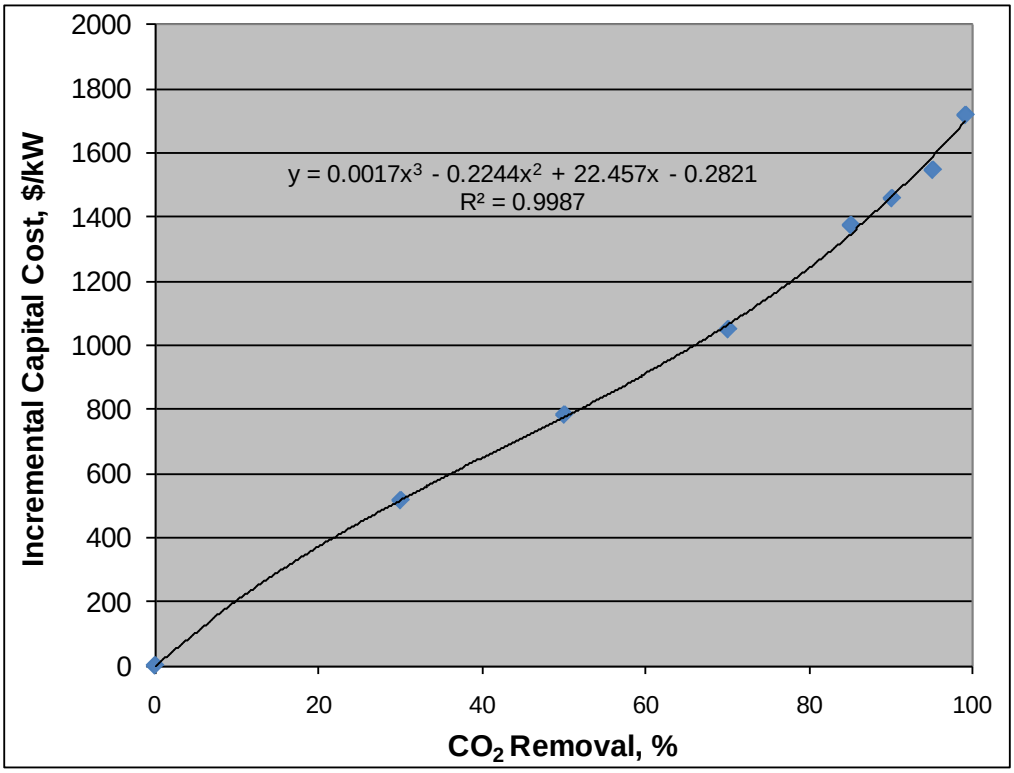

Appendix A- 7 Supercritical PC COE, mills/kWh

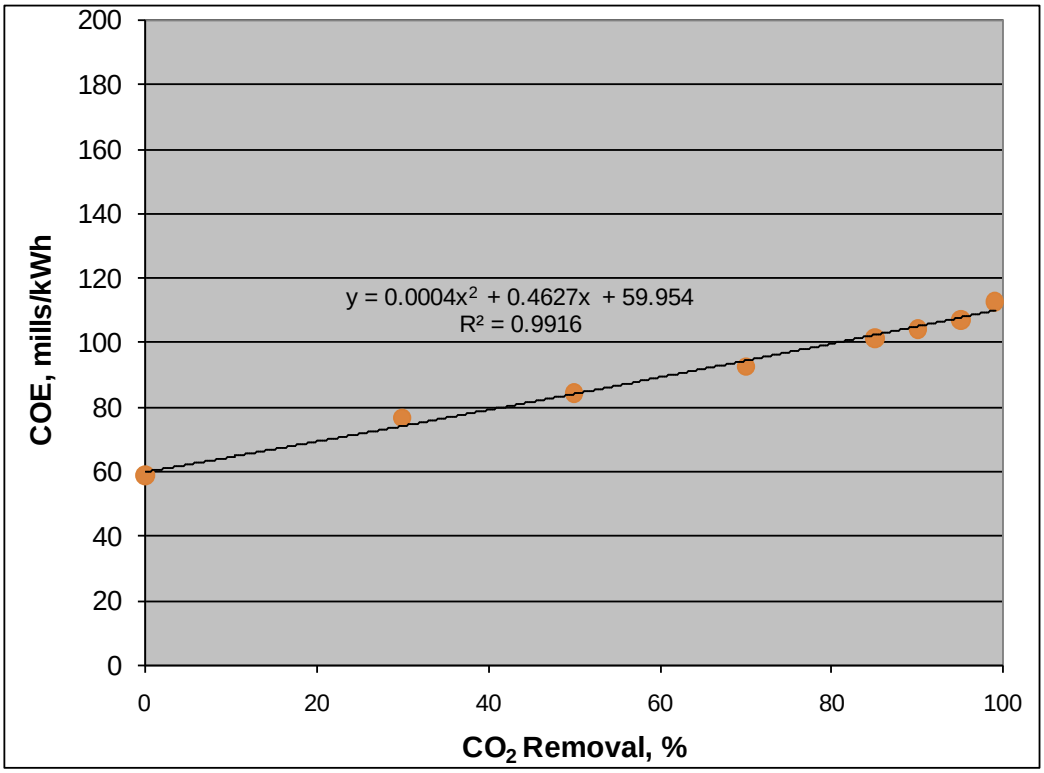

Appendix A- 8 Supercritical PC Incremental COE, mills/kWh

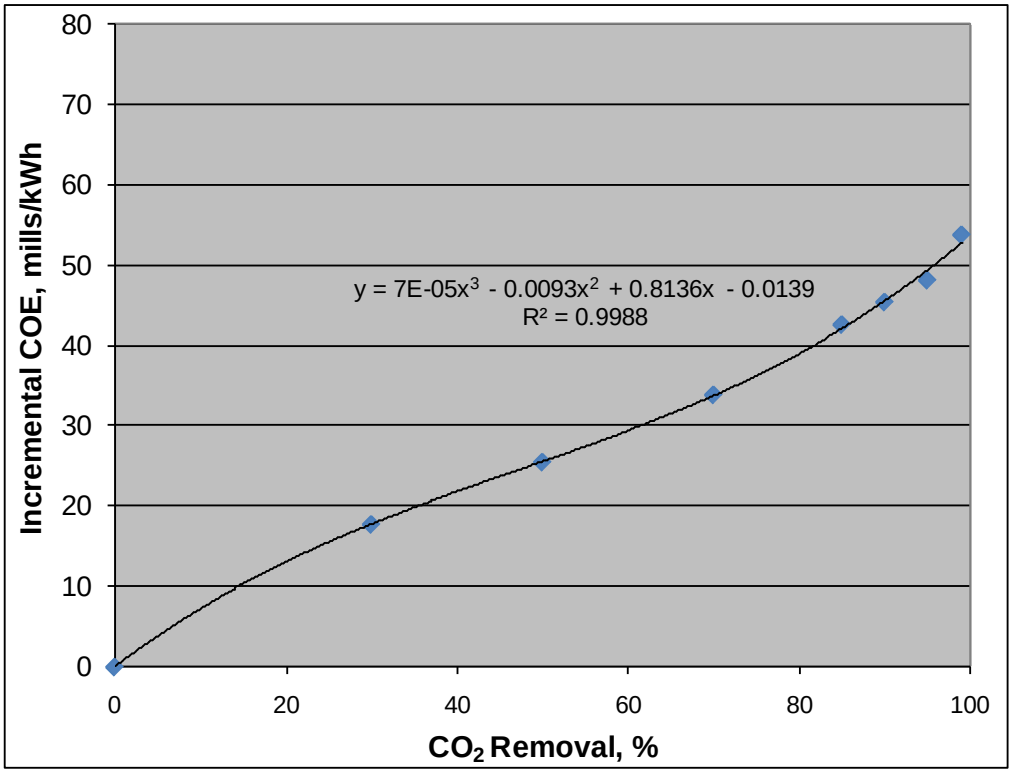

Appendix A- 9 Supercritical PC Percent Increase in COE

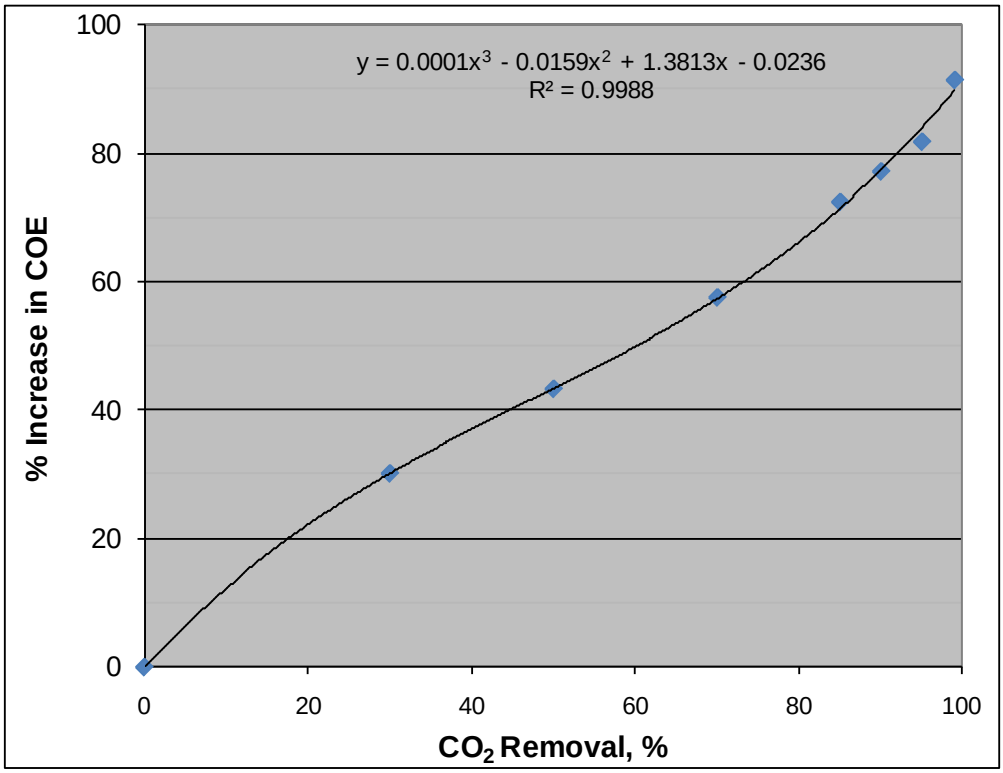

Appendix A- 10 Supercritical PC CO_2 Capture Avoided Costs

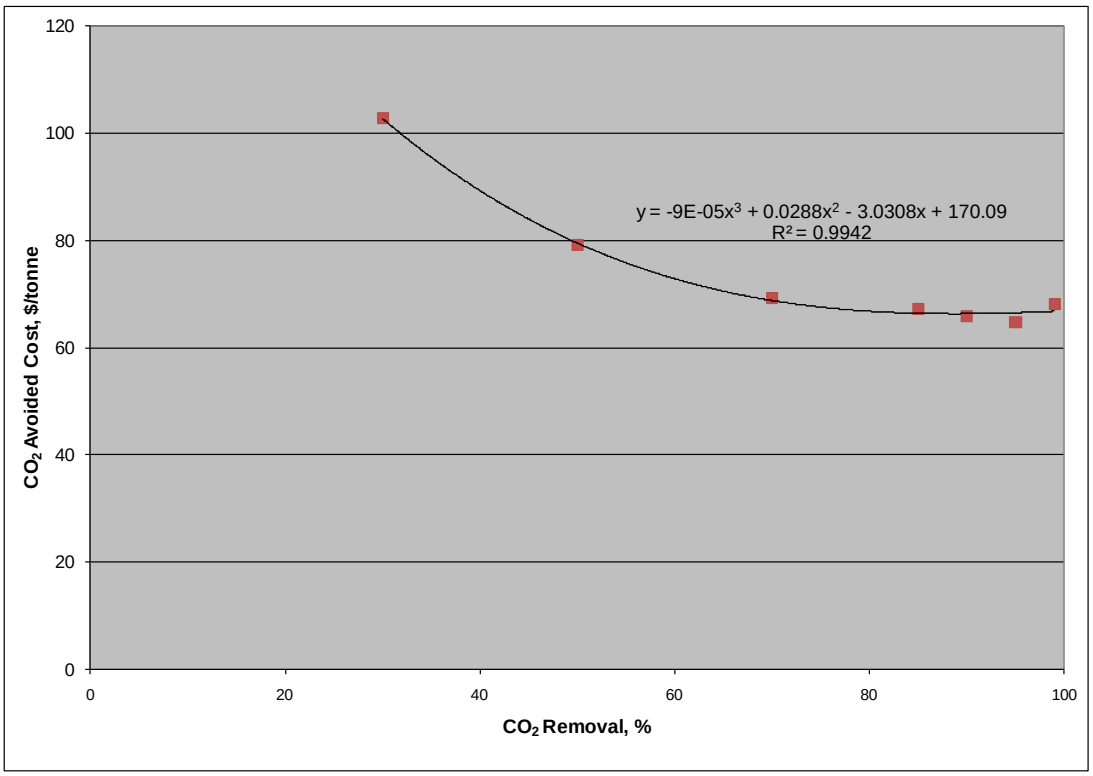

GEE IGCC Cost Algorithms

Appendix A- 11 GEE IGCC CO_2 Capture & Compression Cost, $000

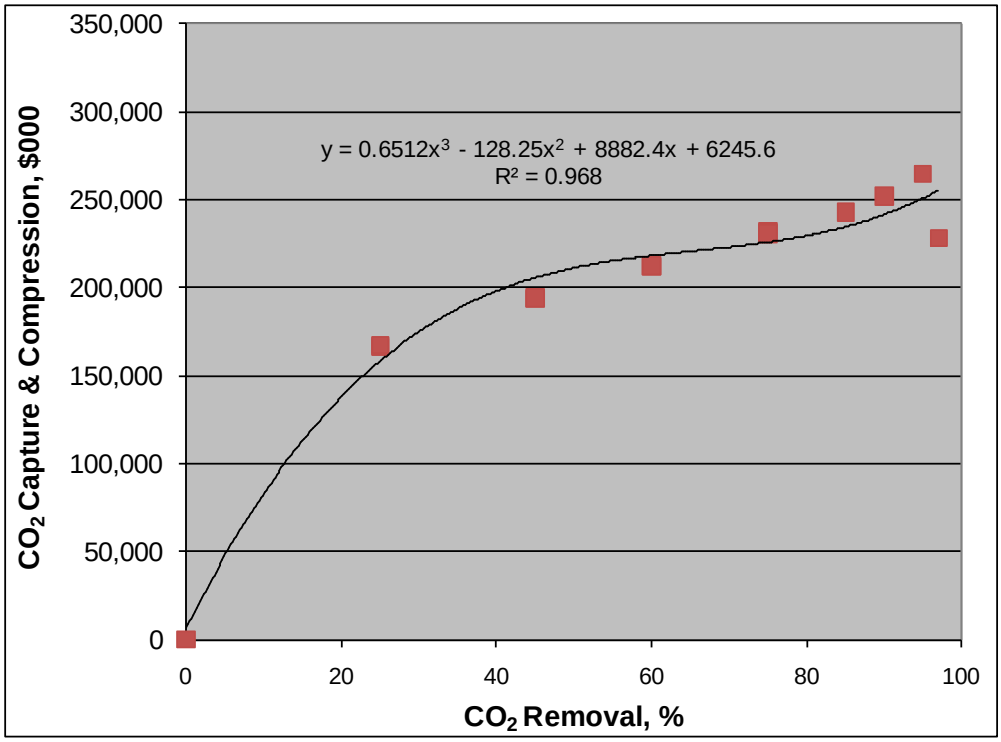

Appendix A- 12 GEE IGCC CO_2 Capture & Compression Cost, $/kW

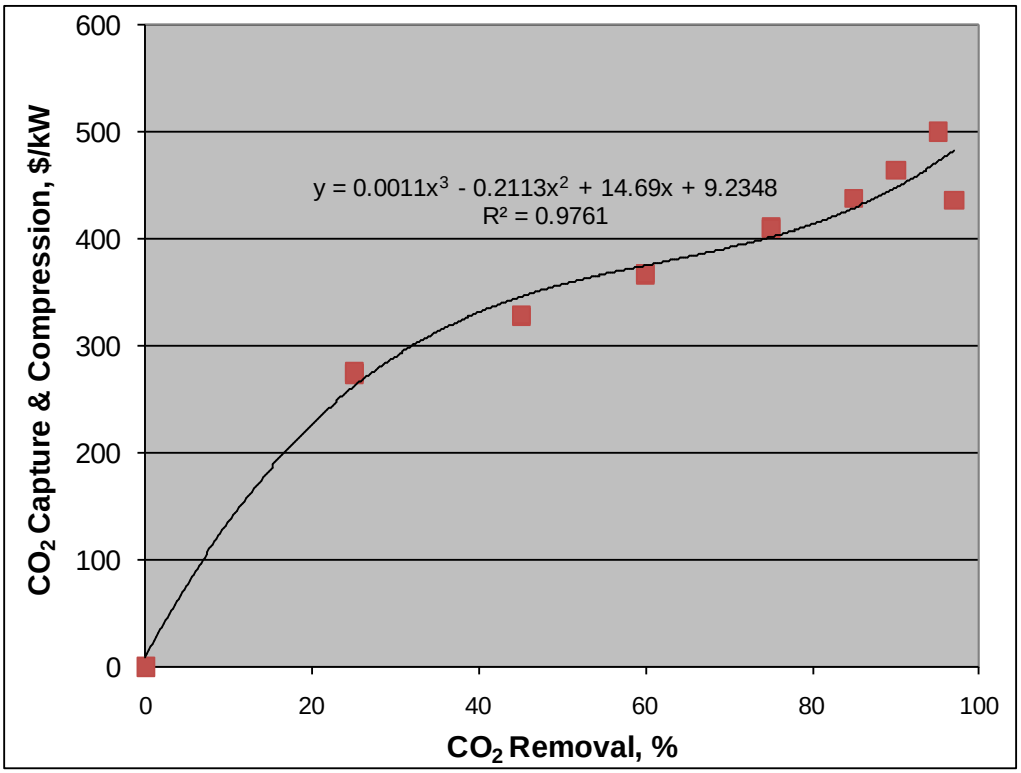

Appendix A- 13 GEE IGCC Total Overnight Cost, $000

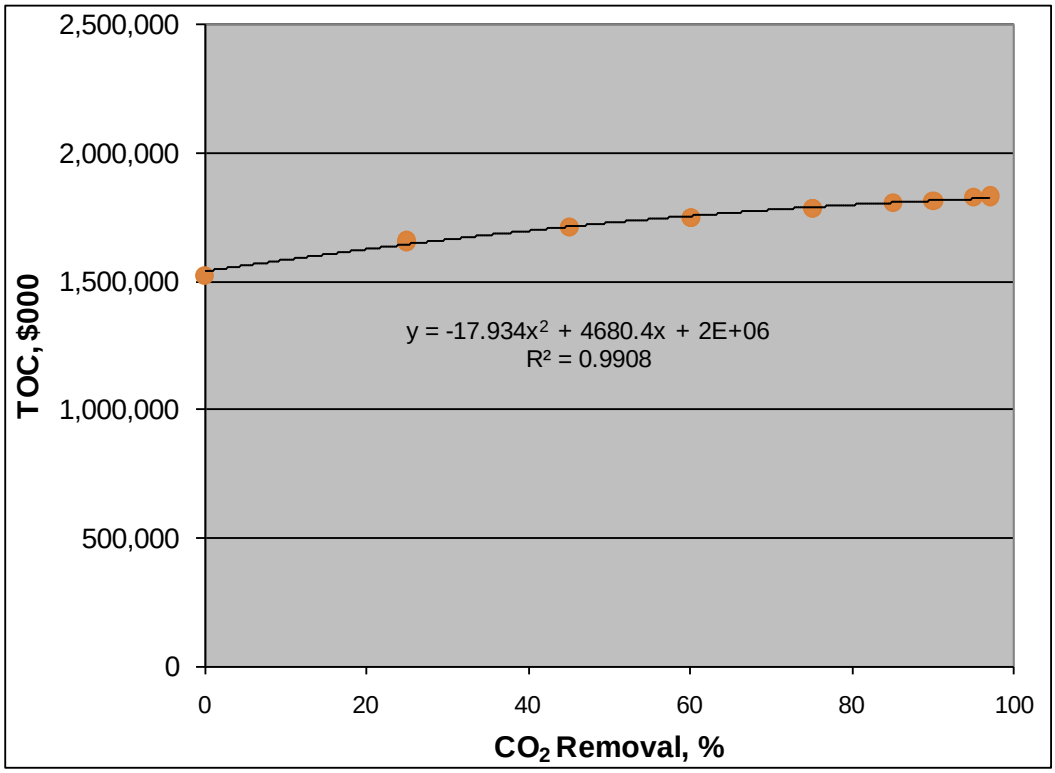

Appendix A- 14 GEE IGCC Total Overnight Cost, $/kW

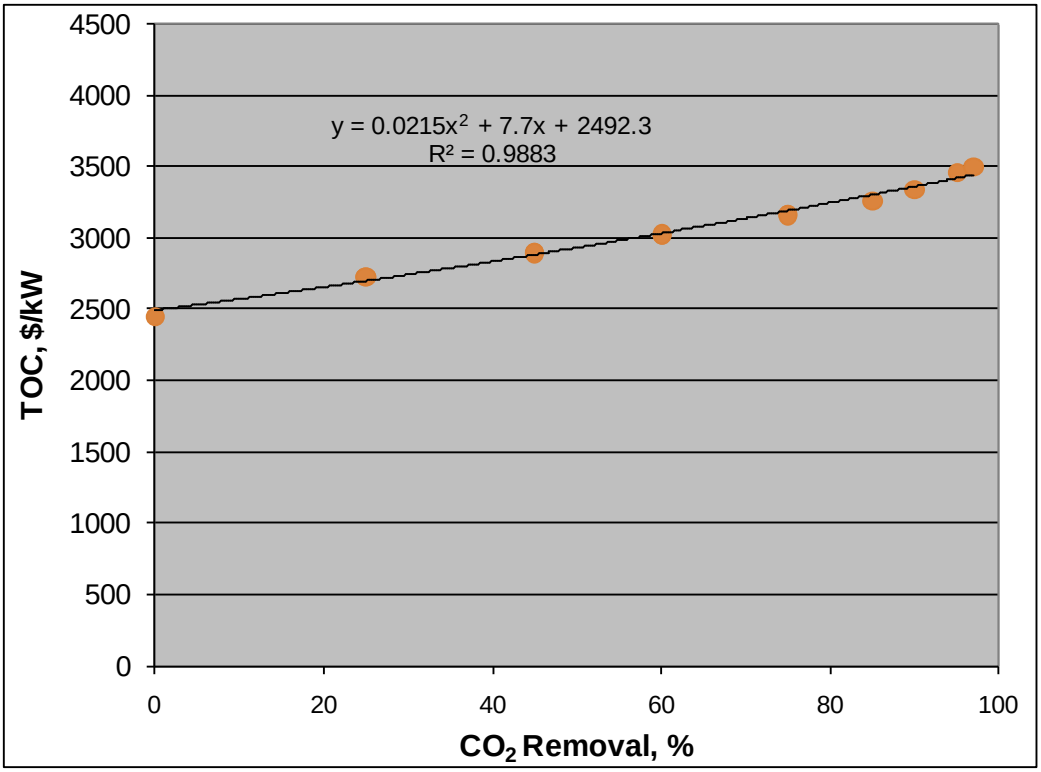

Appendix A- 15 GEE IGCC Incremental Capital Cost, $000

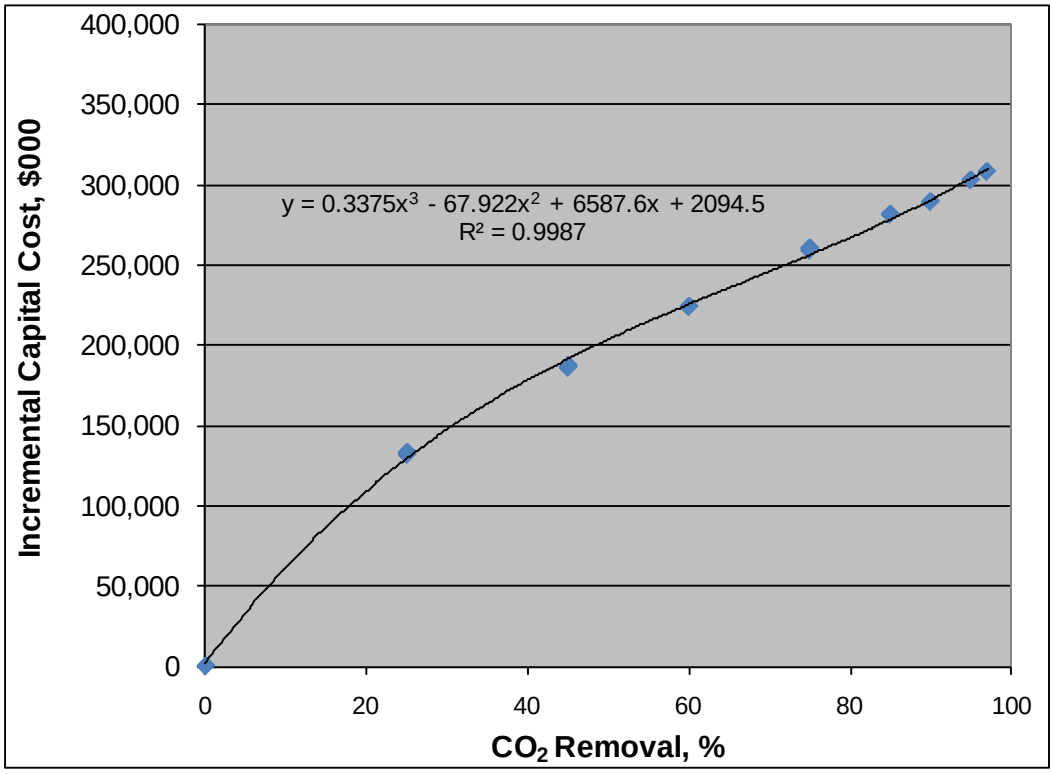

Appendix A- 16 GEE IGCC Incremental Capital Cost, $/kW

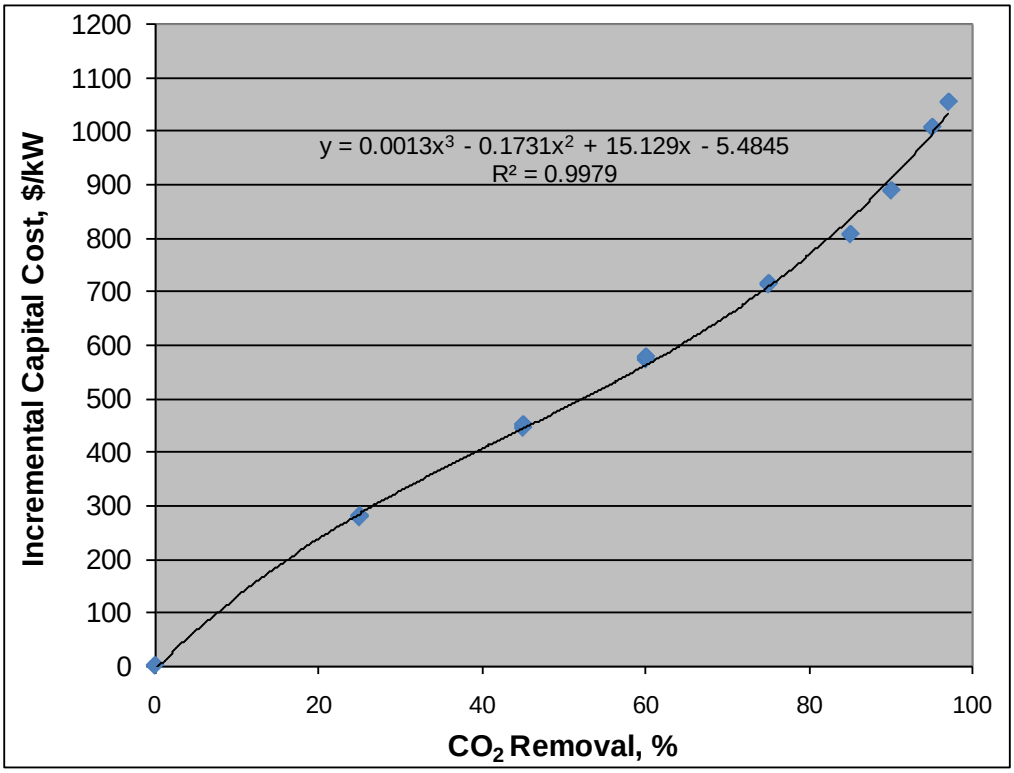

Appendix A- 17 GEE IGCC COE, mills/kWh

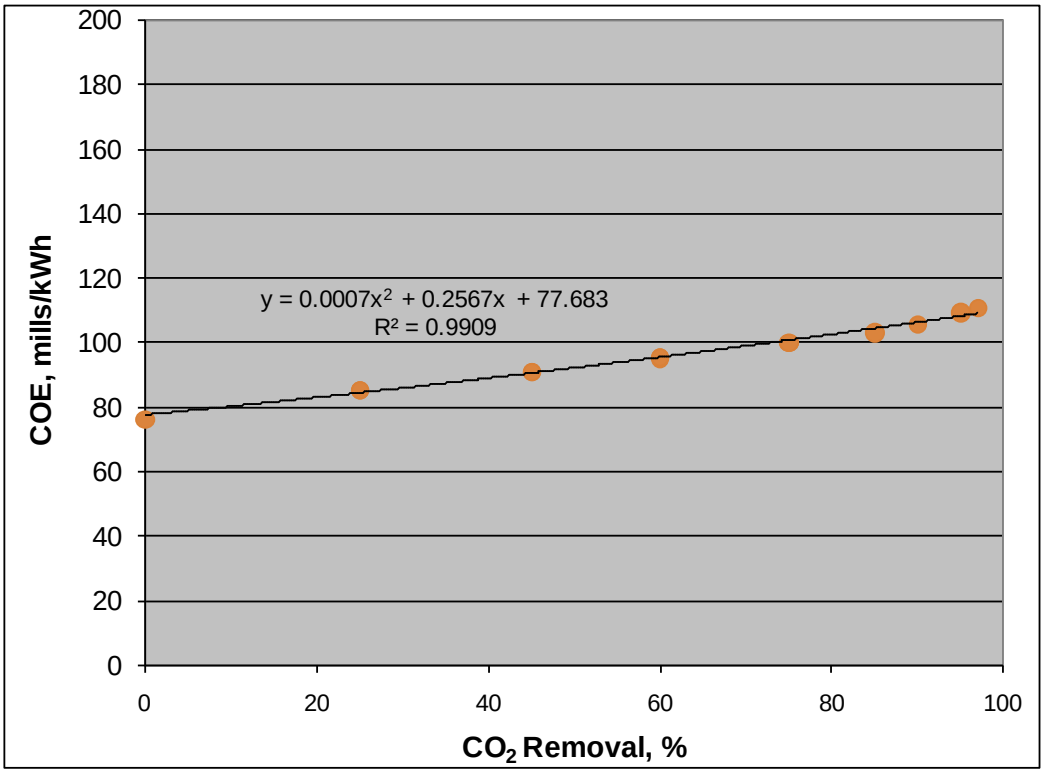

Appendix A- 18 GEE IGCC Incremental COE, mills/kWh

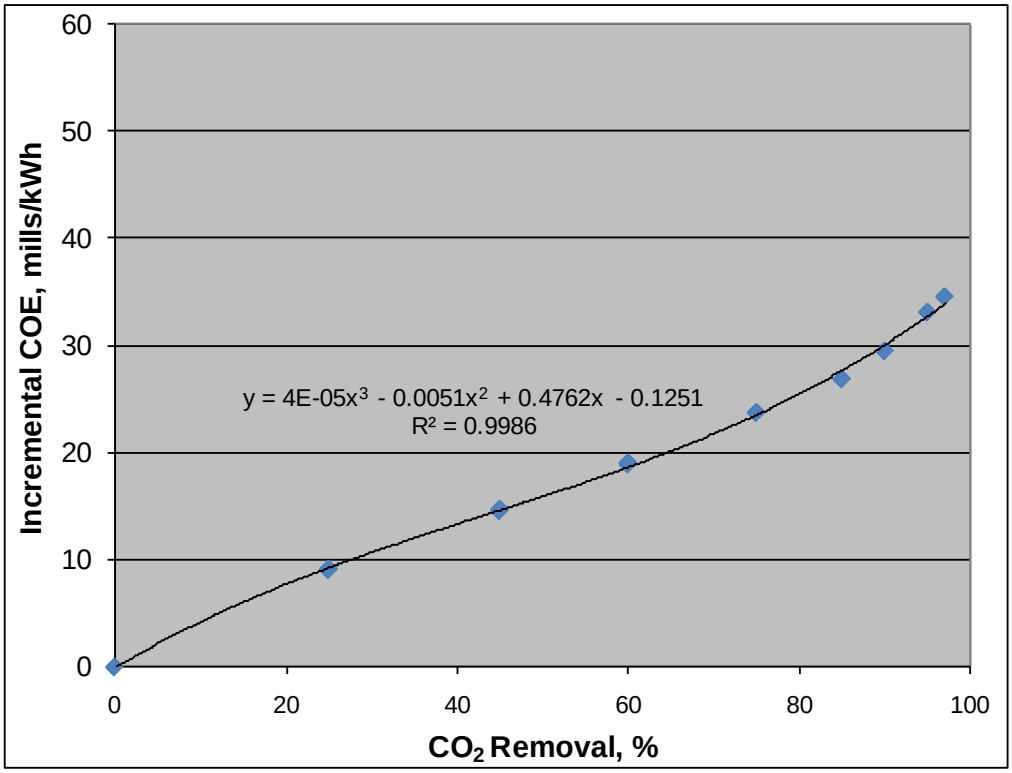

Appendix A- 19 GEE IGCC Percent Increase in COE

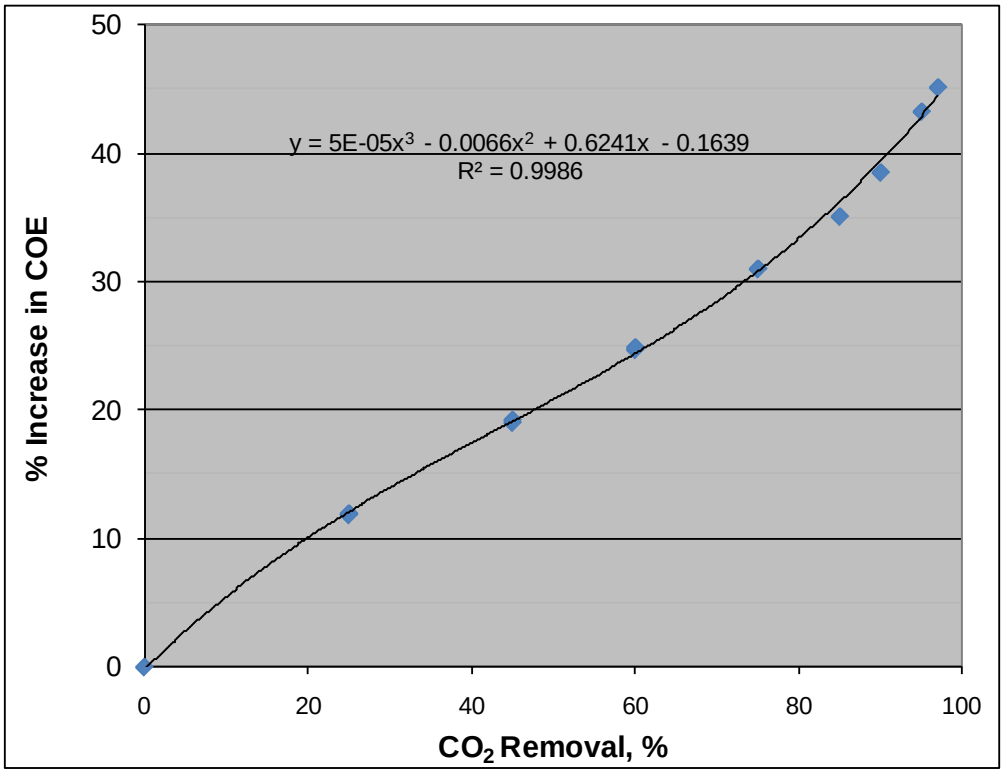

Appendix A- 20 GEE IGCC CO_2 Capture Avoided Costs

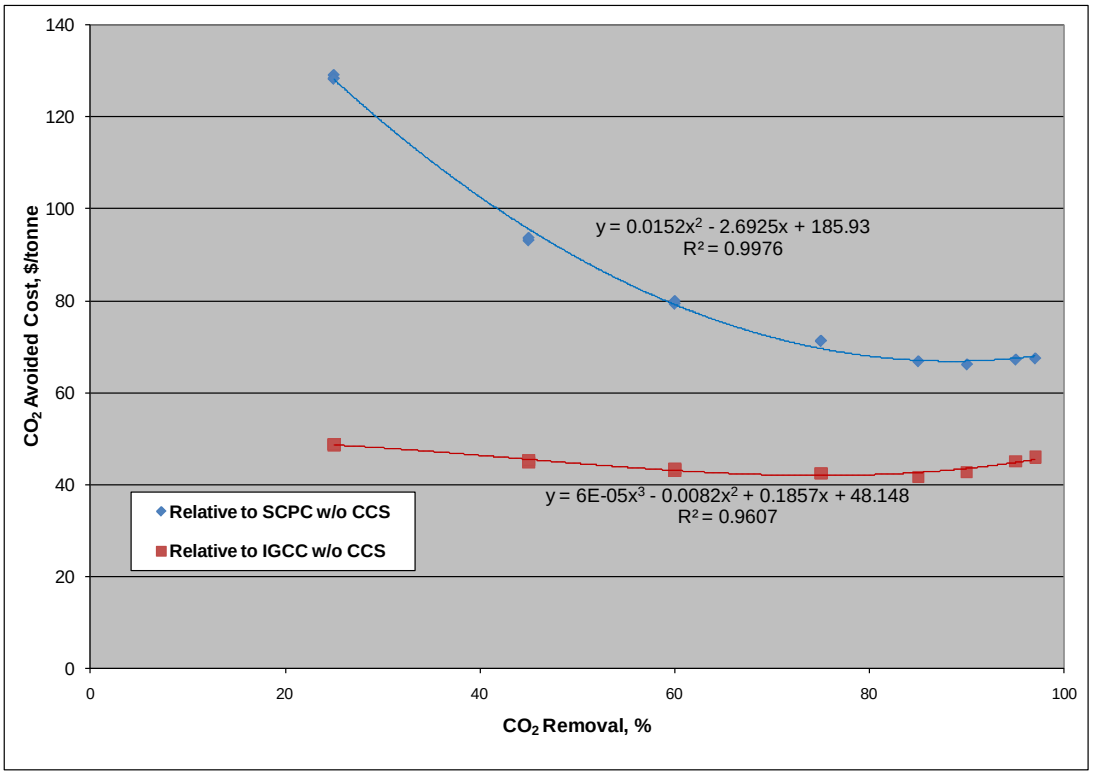

This page intentionally left blank

6. References

1 G.S. Booras, S.C. Smelser. (1991). "An Engineering and Economic Evaluation of CO_2 Removal from Fossil-Fuel-Fired Power Plants." *Energy*, (16) 11-12, pp 1295-1305.

2 Rao, A.B., Rubin, E.S. (2006). "Identifying Cost-Effective CO_2 Control Levels for Amine-BasedCO_2 Capture Systems," *Industrial & Engineering Chemistry Research*, (8) *45*, pp 2421-2429.

3 National Energy Technology Laboratory (NETL). (2007, November). Carbon Dioxide Capture from Existing Coal-Fired Power Plants. DOE/NETL 401/110907.NETL U.S. Department of Energy (DOE), Pittsburgh, Pennsylvania.

4 Reddy, S. (2008). "Econamine FG Plus^{SM} Technology for Post-Combustion CO_2 Capture." Presented at the 11th Meeting of the International Post-Combustion CO_2 Capture Network, Vienna, Austria, May 20-21, 2008.

5 National Energy Technology Laboratory (NETL). (2010, November). Cost and Performance Baseline for Fossil Energy Plants, DOE/NETL-2010/1397 (1). NETL U.S. Department of Energy (DOE), Pittsburgh, Pennsylvania. Retrieved on May 20, 2011, from http://www.netl.doe.gov/energy-analyses/baseline_studies.html

6 Energy Information Administration (EIA). (2008, December). Emissions of Greenhouse Gases in the United States 2007. Retrieved on May 20, 2011, from http://www.eia.doe.gov/oiaf/1605/ggrpt/pdf/0573(2007).pdf

7 Scripps CO_2 Program, CO_2 Concentration at Mauna Loa Observatory, Hawaii, http://scrippsco2.ucsd.edu/

8 Houghton, J.T., Y. Ding, D.J. Griggs, M. Noguer, P.J. van der Linden, X. Dai, K. Maskell, and C.A. Johnson. (Eds.). (2001). Climate Change 2001: The Scientific Basis. Cambridge University Press.

9 International Organization for Standardization (ISO). (n.d.). "Gas Turbines – Procurement – Part 2: Standard Reference Conditions and Ratings." (ISO 3977-2:1997) and "Gas Turbines – Acceptance Tests." (ISO 2314:1989). Edition 2, ISO: Geneva, Switzerland. Retrieved on May 20, 2011, from http://www.iso.org/iso/en/xsite/copyright.html

10 "2004 Keystone Coal Industry Manual." (n.d.). Published by Coal Age, Mining Media, Jacksonville, Florida.

11 Federal Reserve Bank of St. Louis. (n.d.). Gross Domestic Product: Chain-type Price Index (GDPCTPI).Retrieved on May 20, 2011, from http://research.stlouisfed.org/fred2/series/GDPCTPI

12 Personal Communication between John Wimer (NETL) and Diane Kearney (EIA), AEO 2007 Reference Case NEMS model forecasted average costs of delivering (transport cost only) to electric utilities in 2010, as shown in the AEO 2007 data provided by the EIA to NETL on March 30, 2007 (Source: aeo2007.d112106a).

13 Quality Guidelines for Energy System Studies. (2003). Prepared by NETL Office of Systems and Policy Support. NETL U.S. Department of Energy (DOE), Pittsburgh, Pennsylvania.

14 Environmental Protection Agency (EPA). (2007). Title 40: Protection of Environment. § 60.40Da. *Electronic Code of Federal Regulations*, (72) pp 32722. Retrieved on May 20, 2011, from http://ecfr.gpoaccess.gov/cgi/t/text/text-idx?c=ecfr&sid=5239e4e3a1684997ba0d06797c26b6ae&rgn=div6&view=text&node=40:6.0.1.1.1.10&idno=40

15 U.S. Environmental Protection Agency (EPA). (n.d.). Counties Designated Nonattainment. *Green Book*. Retrieved on May 20, 2011, from http://www.epa.gov/oar/oaqps/greenbk/mapnpoll.html

16 Electric Power Research Institute (EPRI). (2006). Coal Fleet User Design Basis Specification for Coal-Based Integrated Gasification Combined Cycle (IGCC) Power Plants: Version 4. EPRI 1012227: Palo Alto, CA.

17 North American Electric Reliability Council (NERC). (n.d.). Assessments & Trends: *Generating Availability Data Systems (GADS).* Retrieved on May 20, 2011, from http://www.nerc.com/page.php?cid=4%7C43

18 Electronic Power Research Institute (EPRI). (2005). Evaluation of Alternative IGCC Plant Designs for High Availability and Near Zero Emissions: RAM Analysis and Impact of SCR. EPRI 1010461: Palo Alto, CA.

19 Higman, C., S. DellaVilla, B. Steele. (2006, May). "The Reliability of Integrated

Gasification Combined Cycle (IGCC) Power Generation Units." Paper presented at Achema, Frankfurt, May 2006.

20 Christensen P., Dysert, L.R. (2005). Cost Estimate Classification System – As Applied in Engineering, Procurement, and Construction for the Process Industries; TCM Framework 7.3 – Cost Estimating and Budgeting. AACE International Recommended Practice No. 18R-97.

21 Conducting Technical and Economic Evaluations – As Applied for the Process and Utility Industries; TCM Framework: 3.2 – Asset Planning, 3.3 Investment Decision Making. (2003). AACE International Recommended Practice 16R-90.

22 Rhudy, B. B., H. Herzog, M. Klett, J. Davison, D.G. De La Torre Ugarte, and D. Simbeck. (2003). Retrieved on May 20, 2011, from http://www.osti.gov/bridge/product.biblio.jsp?query_id=1&page=0&osti_id=826435.

23 Smith, L. A., N. Gupta, B.M. Sass, and T.A. Bubenik. (2001). Engineering and Economic Assessment of Carbon Dioxide Sequestration in Saline Formations. Battelle Memorial Institute: Columbus, Ohio.

24 Ciferno, J. P. and H. McIlvried. (2003). CO_2 Flow Modeling and Pipe Diameter Determination. DOE/NETL 2007/1291. NETL U.S. Department of Energy (DOE), Pittsburgh, Pennsylvania.

25 Parker, N. (2004). Using Natural Gas Transmission Pipeline Costs to Estimate Hydrogen Pipeline Costs. Institute of Transportation Studies, University of California, Davis, CA,.

26 Gresham, R.L., J. Apt, M.G. Morgan, and S.T. McCoy. (1999). Implications of Compensating Property-Owners for Geologic Sequestration of CO_2. Department of Engineering and Public Policy, Carnegie Mellon University, Pittsburgh, Pennsylvania.

27 Klass, A.B. and E.J. Wilson. (2008). "Climate Change and Carbon Sequestration: Assessing a Liability Regime for Long-Term Storage of Carbon Dioxide." 58 *Emory Law Journal* 103.

28 Senate Bill No. 2095. (2009, January 6). 61st Legislative Assembly of North Dakota.

29 House Bill No. 661. (2009). Louisiana House of Representatives Regular Session.

30 Enrolled Act No. 20 (Original House Bill No. 58). (2009). 60th Legislature of the State of Wyoming, General Session.

31 Benson, S.M., E. Gasperikova, M. Hoversten. (2004, November). Overview of Monitoring Requirements for Geologic Storage Projects. Lawrence Berkeley National Laboratory Report PH4/29 for IEA Greenhouse Gas R&D Programme LBNL, Berkeley, California.

32 Recommended Project Finance Structures for the Economic Analysis of Fossil-Based Energy Projects. (2008, September). DOE/NETL 401-090808. NETL U.S. Department of Energy (DOE), Pittsburgh, Pennsylvania.

33 Stinnett, C. (2008, March 28). "Cash Creek Incentives $150 Million." *Evansville Courier & Press*. Retrieved on xxxxx, from http://www.courierpress.com/news/2008/mar/28/cash-creek-incentives-150-million/

34 Bily, B. "No Customer for Controversial Energy Project." (2009, April 1). *BusinessNorth.com*. Retrieved on May 20, 2011, from http://www.businessnorth.com/exclusives.asp?RID=2934

35 McEwen, M. "Summit Seeks Grant for Clean Coal Power Plant Near Penwell." (2009, September 26). *mywesttexas.com*. Retrieved on May 20, 2011, from http://www.mywesttexas.com/news/top_stories/article_85e0ec6c-c3ce-52b5-a6cc-ede89e9fc7d5.html

36 "Proposed Coal-fired IGCC Power Plant Would Cost $5,500/kW." (2010, March 19). *Power-Gen Worldwide*Retrieved on May 20, 2011, from http://www.powergenworldwide.com/index/display/articledisplay/4210875418/articles/powergenworldwide/coal-generation/new-projects/2010/03/mississippi-power.html

37 Storm, R.F. (1993, October). "Optimizing Combustion in Boilers with Low NOx Burners." *Power*,pp 53-62 , October 1993.

38 Wieslanger, P. (2000). "Fabric Filters for Power Applications." ALSTOM Power Environmental Systems AB.

39 Internation Energy Agency (IEA) Greenhouse Gas R&D Programme. (2004, November). Improvement in Power Generation with Post-Combustion Capture of CO_2. Report PH4/33. Retrieved on May 20, 2011, from http://www.canadiancleanpowercoalition.com/pdf/AS5%20-%20PH4-33%20post%20combustion.pdf

40 Gorman, W.G. and J.K. Reinker. (1994). "Steam Turbines for Utility Applications."

Power Generation.

41 National Energy Technology Laboratory (NETL). (2006, August). Clean Coal Technologies: Coal Utilization By Products. Report Number 24. NETL U.S. Department of Energy (DOE), Pittsburgh, Pennsylvania. Retrieved on xxxxx, from http://www.netl.doe.gov/technologies/coalpower/cctc/topicalreports/pdfs/Topical24.pdf.

42 Institute of Clean Air Companies (ICAC). Enhancing Mercury Control on Coal-Fired Boilers with SCR, Oxidation Catalyst, and FGD. Retrieved on May 20, 2011, from http://www.icac.com/files/public/ICAC_Hg_FactSheet_SCR-FGD_2010.pdf

43 U.S. Environmental Protection Agency (EPA). (2004). Standalone Documentation for EPA Base Case 2004 (V.2.1.9) Using the Integrated Planning Model. EPA 430- R-05-011, p. 5-11.

44 Rigdon, R. and L. Schmoe. (2005, October). "The IGCC Reference Plant." GasificationTechnologies Conference, San Francisco, CA.

45 Electric Power Research Institute (EPRI). (1993, December). "Coal Gasification Guidebook: Status, Applications, and Technologies." TR-102034. Palo Alto, California.

46 McDaniel, J. (2002, August). Tampa Electric Polk Power Station Integrated Gasification Combined Cycle Project: Final Technical Report. NETL U.S. Department of Energy (DOE), Morgantown, West Virginia.

47 Universal Industrial Gases, Inc. (n.d.). Overview of Cryogenic Air Separation and Liquefier Systems. Retrieved on xxxxx, from http://www.uigi.com/cryodist.html

48 Jenkins, S. (2005). "Real-World Experience with IGCC – Lessons Learned in Design, Permitting, Operations and Maintenance," URS Corporation Presentation, August 17, 2005.

49 Geosits, R.F. and L.A. Schmoe. (2005, June). "IGCC – The Challenges of Integration." *Proceedings of GT2005 ASME Turbo Expo 2005: Power for Land, Sea, and Air*. Reno, NV.

50 Jaeger, H. (2006, March-April). "Plant Design Net Rated 644 MW and 38% HHV on Low Rank Coal." *Gas Turbine World*.

51 Personal communication. (2002, November). Ray Drnevich, Praxair, Inc., ray_drnevich@praxair.com.

52 SFA Pacific, Inc. (2002, December). "Process Screening Analysis of Alternative Gas Treating and Sulfur Removal for Gasification." Final Report.

53 Personal communication with David Denton, Eastman Chemical Company.

54 Brdar, R.D. and R.M. Jones. (2000, October). GE IGCC Technology and Experience withAdvanced Gas Turbines. GE Power Systems: Schenectady, NY, GER-4207.

55 GE Power Systems: Gas Turbines. (2002, January). Process Specification for Fuel Gases for Combustion in Heavy-Duty Turbines. GE Power Systems: Schenectady, NY, GEI-41040G. Retrieved on May 20, 2011, from http://www.netl.doe.gov/technologies/coalpower/turbines/refshelf/GE%20Turbine%20Fuel%20Specs.pdf

56 Erickson, D.M., S.A. Day, and R. Doyle. (2003). Design Considerations for Heated Gas Fuel. GE Power Systems: Greenville, SC, GER-4189B Retrieved on May 20, 2011, from http://site.ge-energy.com/prod_serv/products/tech_docs/en/downloads/ger4189b.pdf

57 Honeywill UOP. (2009). "UOP Selexol™ Technology Applications for CO_2 Capture." Presented at the 3rd Annual Wyoming CO_2 Conference, Casper, Wyoming, June 23-24, 2009. Retrieved on May 20, 2011 from http://www.uwyo.edu/eori/_files/co2conference09/Mike%20Clark%20REVISED%20Selexol_Wyoming_Conference.pdf