Pulverized Bituminous Coal Plants With and Without Carbon Capture & Sequestration

Technology Overview

Four pulverized coal (PC) Rankine cycle power plant configurations fired with bituminous coal were evaluated and the results are presented in this summary sheet. All cases were analyzed using a consistent set of assumptions and analytical tools. Each PC type was assessed with and without carbon capture and sequestration (CCS). The individual configurations are as follows:

- Subcritical PC plant.
- Subcritical PC plant with CCS.
- Supercritical PC plant.
- Supercritical PC plant with CCS.

Each PC plant design is based on a market-ready technology that is assumed to be commercially available in time to support a 2010 startup date. The PC plants are built at a greenfield site in the midwestern United States and are assumed to operate at 85 percent capacity factor (CF) without sparing of major train components. Nominal plant size (gross rating) is 580 MWe without CCS and 670 MWe with CCS. All designs employ a one-on-one configuration comprising a state-of-the-art PC steam generator and a steam turbine. The primary fuel is Illinois No. 6 bituminous coal with a higher heating value (HHV) of 11,666 Btu/lb. The boiler is a dry-bottom, wall-fired unit that employs low-nitrogen oxides burners (LNBs) with over-fire air (OFA) and selective catalytic reduction (SCR) for nitrogen oxides (NOx) control, a wet-limestone forced-oxidation scrubber for sulfur dioxide (SO_2) and mercury (Hg) control, and a fabric filter for particulate matter (PM) control.

The PC cases are evaluated with and without CCS on a common 550 MWe net basis. The designs that include CCS are equipped with the Fluor Econamine Flue Gas (FG) Plus™ process. The CCS cases have a larger gross electrical output to compensate for the higher auxiliary loads. After compression to pipeline specification pressure, the carbon dioxide (CO_2) is assumed to be transported to a nearby underground storage facility for sequestration. The boiler and steam turbine industry ability to match unit size to a custom specification has been commercially demonstrated, enabling common net output comparison of the PC cases in this study.

See Figure 1 for a generic block flow diagram of a PC plant. The orange blocks in the figure represent the unit operations added to the configuration for CCS cases.

Figure 1. Pulverized Coal Power Plant

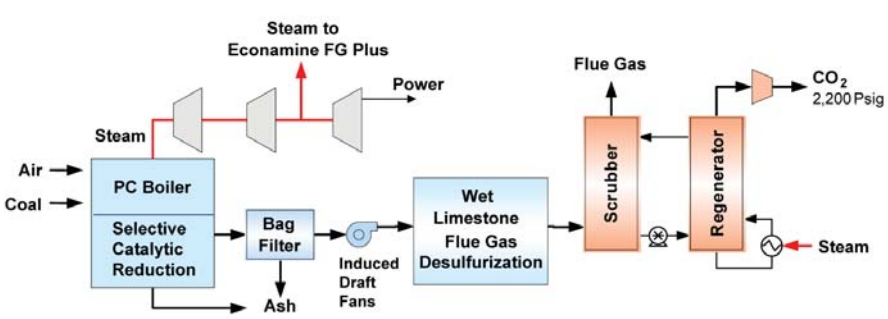

Orange blocks indicate unit operations added for CCS Case.

Particulate matter control: Baghouse achieves 0.013 lb/MMBtu (99.8% removal).

Sulfur oxides control: FGD to achieve 0.085 lb/MMBtu (98% removal).

Nitrogen oxides control: LNB + OFA + SCR to maintain 0.07 lb/MMBtu emissions limit.

Carbon dioxide control: Fluor Econamine FG Plus™ (90% removal).

Hg control: Co-benefit capture for ~90% removal.

Subcritical steam conditions: 2,400 psig/1,050°F/1,050°F.

Supercritical steam conditions: 3,500 psig/1100°F/1,100°F.

Note: Diagram is provided for general reference of major flows only. For complete flow information, please refer to the final report.

Technical Description

Steam conditions for the Rankine cycle cases are based on input from the original boiler and steam turbine equipment manufacturers (OEMs) input on the most advanced steam conditions they would guarantee for a commercial project in the United States with PC units rated at nominal 550 MWe net capacity firing Illinois No. 6 coal. The input from the OEMs resulted in the following single-reheat steam conditions:

- For subcritical cases – 16.5 MPa/566°C/566°C (2,400 psig/1,050°F/1,050°F).
- For supercritical cases – 24.1 MPa/593°C/593°C (3,500 psig/1,100°F/1,100°F).

Recirculating evaporative cooling systems are used for cycle heat rejection. The average efficiency of the cases without CCS is almost 38 percent (HHV basis) for a plant with a nominal gross rating of 580 MWe.

The CCS cases require a significant amount of auxiliary power and extraction steam for the process, which reduces the output of the steam turbine. This requires a higher nominal gross plant output for the CCS cases of about 670 MWe for an average net plant efficiency of 26 percent (HHV basis).

The designs that include CCS are equipped with the Fluor Econamine FG Plus™ technology, which removes 90 percent of the CO_2 in the flue gas exiting the flue gas desulfurization (FGD) unit. Once captured, the CO_2 is dried and compressed to 15.3 MPa (2,215 psia). The compressed CO_2 is transported via pipeline to a geologic sequestration field for injection into a saline aquifer, which is located within 50 miles of the plant. Carbon dioxide transport, storage, and monitoring costs are included in the analyses.

Table 1. Fuel Analysis

Rank	Bituminous	
Seam	Illinois No. 6 (Herrin)	
Source	Old Ben Mine	
Proximate Analysis (weight %)[1]		
	As received	Dry
Moisture	11.12	0.00
Ash	9.70	10.91
Volatile matter	34.99	39.37
Fixed carbon	44.19	49.72
Total	**100.00**	**100.00**
Sulfur	2.51	2.82
Higher heating value, Btu/lb	11,666	13,126
Lower heating value, Btu/lb	11,252	12,712

[1]The above proximate analysis assumes sulfur as a volatile matter.

Fuel Analysis and Costs

The design coal characteristics are presented in Table 1. All PC cases were modeled with Illinois No. 6 coal.

A cost of $1.80/MMBtu (January 2007 dollars) was determined from the Energy Information Administration AEO2007 for an eastern interior high-sulfur bituminous coal.

Environmental Design Basis

The environmental approach for this study was to evaluate each of the PC cases on the same regulatory design basis. The environmental specifications for a greenfield PC plant are based on Best Available Control Technology (BACT), which exceed New Source Performance Standard (NSPS) requirements. Table 2 provides details of the environmental design basis for PC plants built at a midwestern U.S. location. The emissions controls assumed for each of the four PC cases are as follows:

Table 2. Environmental Targets

Pollutant	PC[1]
SO_2	0.085 lb/MMBtu
NOx	0.07 lb/MMBtu
PM (filterable)	0.013 lb/MMBtu
Hg	1.14 lb/TBtu

[1]Based on BACT and NSPS.

- A wet-limestone FGD system was used for sulfur control and also provided co-benefit Hg removal.
- Low-NOx burners with OFA in conjunction with an SCR unit were used for NOx control.

- Fabric filter was used for PM control.
- Econamine FG Plus™ was used for CO_2 capture in the CCS cases.

Major Economic and Financial Assumptions

For the PC cases, capital cost, production cost, and levelized cost-of-electricity (LCOE) estimates were developed for each plant based on adjusted vendor-furnished and actual cost data from recent design/build projects and resulted in determination of a revenue-requirement 20-year LCOE based on the power plant costs and assumed financing structure. Listed in Table 3 are the major economic and financial assumptions for the four PC cases.

Table 3. Major Economic and Financial Assumptions for PC Cases

Major Economic Assumptions	
Capacity factor	85%
Costs per year, constant U.S. dollars	2007 (January)
Illinois No. 6 delivered cost	$1.80/MMBtu
Construction duration	3 years
Plant startup date	2010 (January)
Major Financial Assumptions	
Depreciation	20 years
Federal income tax	34%
State income tax	6%
Low risk cases	
After-tax weighted cost of capital	8.79%
Capital structure:	
Common equity	50% (Cost = 12%)
Debt	50% (Cost = 9%)
Capital charge factor	16.4%
High risk cases	
After-tax weighted cost of capital	9.67%
Capital structure:	
Common equity	55% (Cost = 12%)
Debt	45% (Cost = 11%)
Capital charge factor	17.5%

Project contingencies were added to each of the cases to cover project uncertainty and the cost of any additional equipment that could result from detailed design. The project contingencies represent costs that are expected to occur. Project contingency was about 11 percent for the PC cases without CCS and roughly 12.5 percent for the PC cases with CCS.

Process contingency is intended to compensate for uncertainties arising as a result of the state of technology development. Process contingencies have been applied to the estimates as follows:

- CO_2 Removal System – 20 percent on all PC CCS cases.
- Instrumentation and Controls – 5 percent on the PC CCS cases.

This study assumes that each new plant would be dispatched any time it is available and would be capable of generating maximum capacity when online. Therefore, CF is assumed to equal availability and is 85 percent for PC cases.

For the PC cases that feature CCS, capital and operating costs were estimated for transporting CO_2 to an underground storage field, associated storage in a saline aquifer, and for monitoring beyond the expected life of the plant. These costs were then levelized over a 20-year period.

Results

An analysis of the four PC cases is presented in the following sections.

Capital Cost

The total plant cost (TPC) for each of the four PC cases is compared in Figure 2. The TPC includes all equipment (complete with initial chemical and catalyst loadings), materials, labor (direct and indirect), engineering and construction management, and contingencies (process and project). Owner's costs are not included.

Figure 2. Comparison of TPC for the Four PC Cases

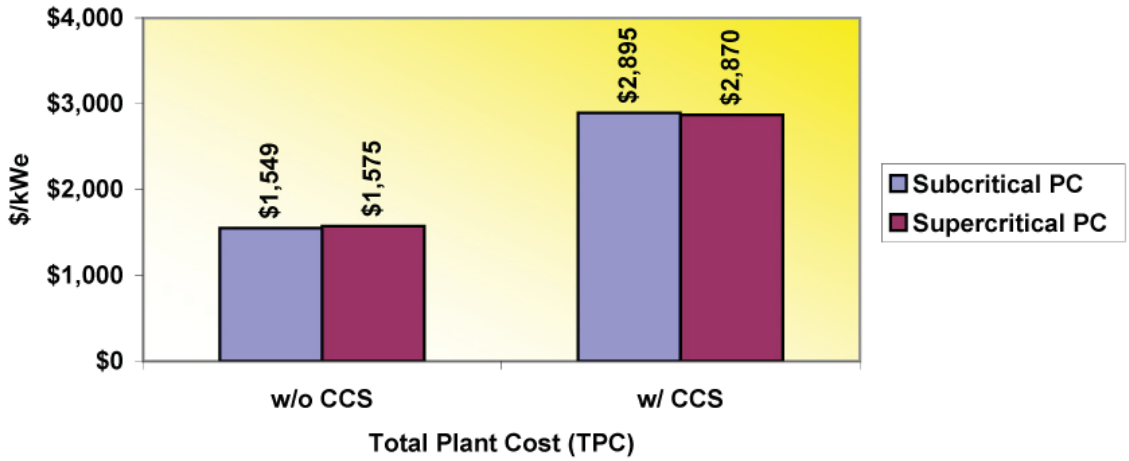

All costs are in January 2007 U.S. dollars.

The results of the analysis indicate that the supercritical PC cases and the subcritical PC cases are nearly the same capital cost. With CCS, the TPC increases by roughly 85 percent for both subcritical and supercritical cases, resulting in very similar capital costs of almost $2,900/kWe.

Efficiency

The net plant HHV efficiencies for the four PC cases are compared in Figure 3. This analysis indicates that the supercritical plant efficiency of 39.1 percent (HHV basis) is 2 percentage points higher than the subcritical case. With CCS, the efficiency penalty is a 12 percentage point drop in both subcritical and supercritical plants, resulting in an efficiency of about 25 percent (HHV basis) for the subcritical case, with the supercritical case being about 2 percentage points higher.

Figure 3. Comparison of Net Plant Efficiency for the Four PC Cases

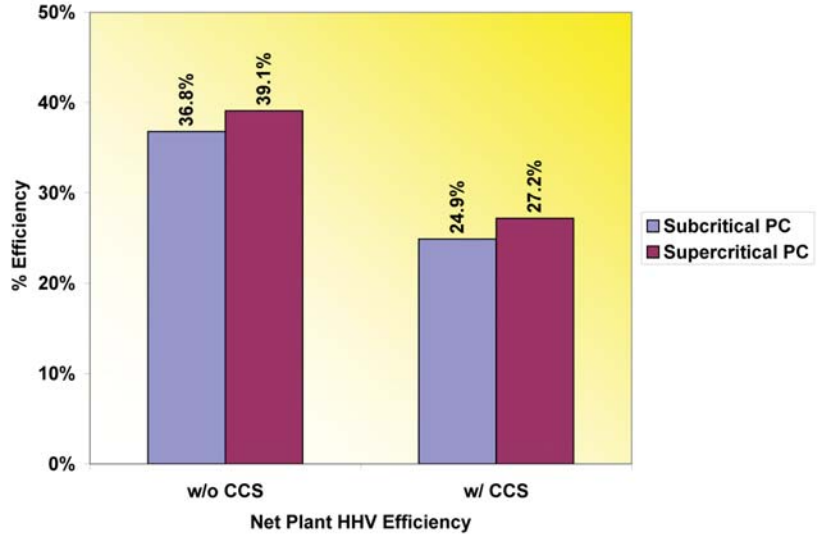

Levelized Cost-of-Electricity

The LCOE is a measurement of the coal-to-busbar cost of power, and includes the TPC, fixed and variable operating costs, and fuel costs levelized over a 20-year period. The calculated cost of transport, storage, and monitoring for CO_2 is about $3.40/short ton, which adds roughly 4 mills to the LCOE.

Figure 4. Comparison of Levelized Cost-of-Electricity for the Four PC Cases

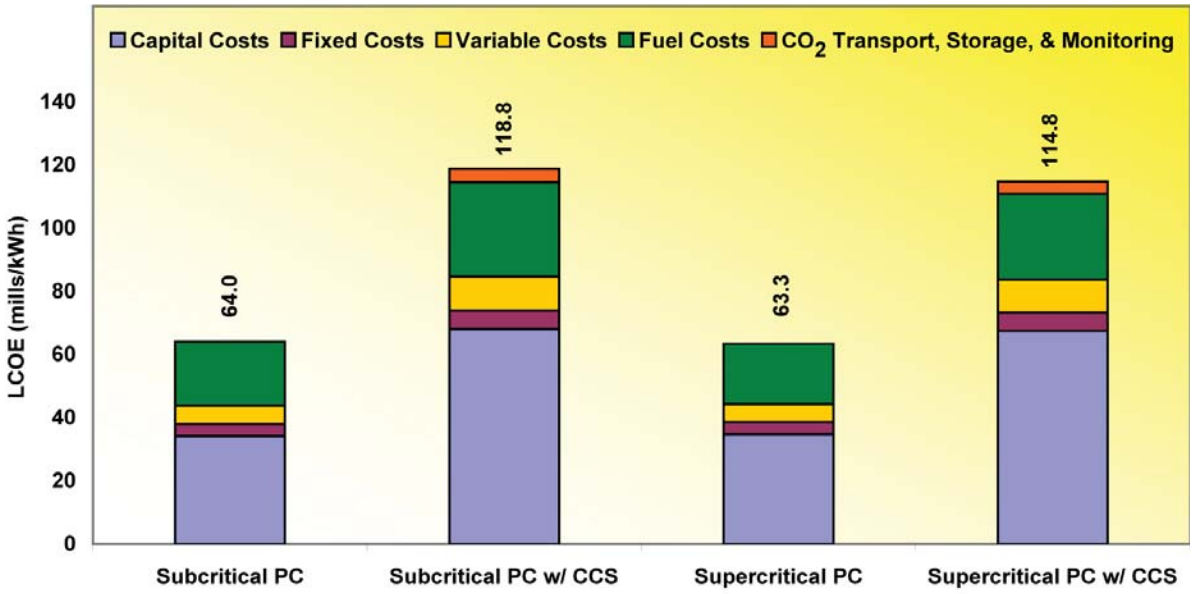

All costs are in January 2007 U.S. dollars.

The PC plants generate power at an LCOE of about 64 mills/kWh at a CF of 85 percent. When CCS is included, the increased TPC and reduced efficiency result in a higher LCOE of roughly 117 mills/kWh.

Environmental Impacts

Table 4 provides a comparative summary of emissions from the four PC cases. Mass emission rates and cumulative annual totals are given for SO_2, NOx, PM, Hg, and CO_2. Additionally, plant water usage is shown.

The emissions from all four PC cases evaluated meet or exceed BACT and NSPS requirements. The CO_2 is reduced by 90 percent in the capture cases, resulting in emissions of less than 570,000 tons/year. The cost of CO_2 avoided is about $68/ton. The cost of CO_2 avoided is defined as the difference in the 20-year LCOE between controlled and uncontrolled like cases, divided by the difference in CO_2 emissions in kg/MWh. Raw water usage in the CCS cases is more than twice that of the cases without CCS primarily because of the large cooling water demand of the Econamine FG Plus™ process.

Table 4. Air Emissions Summary @ 85% Capacity Factor

	Pulverized Coal Boiler			
Pollutant	PC Subcritical		PC Supercritical	
	Without CCS	With CCS (90%)	Without CCS	With CCS (90%)
CO_2				
• tons/year	3,864,884	569,524	3,631,301	516,310
• lb/MMBtu	203	20.3	203	20.3
• cost of avoided CO_2 ($/ton)	—	68	—	68
SO_2				
• tons/year	1,613	Negligible	1,514	Negligible
• lb/MMBtu	0.0848	Negligible	0.0847	Negligible
NOx				
• tons/year	1,331	1,966	1,250	1,784
• lb/MMBtu	0.070	0.070	0.070	0.070
PM (filterable)				
• tons/year	247	365	232	331
• lb/MMBtu	0.0130	0.0130	0.0130	0.0130
Hg				
• tons/year	0.022	0.032	0.020	0.029
• lb/TBtu	1.14	1.14	1.14	1.14
Raw water usage, gpm	6,212	14,098	5,441	12,159

Contacts

Julianne M. Klara
Senior Analyst
National Energy Technology Laboratory
626 Cochrans Mill Road
P.O. Box 10940
Pittsburgh, PA 15236
412-386-6089
julianne.klara@netl.doe.gov

John G. Wimer
Systems Analysis Team Lead
National Energy Technology Laboratory
3610 Collins Ferry Road
P. O. Box 880
Morgantown, WV 26507
304-285-4124
john.wimer@netl.doe.gov

Reference: Cost and Performance Baseline for Fossil Energy Plants, Vol. 1, DOE/NETL-2007/1281, May 2007.
B_PC_051507