# MECHANISTIC UNDERSTANDING OF MICBROBIL PLUGGING FOR IMPORIVED SWEEP EFFICIENCY

**ANNUAL REPORT**

**OCTOBER 1, 2004-SEPTEMBER 31, 2005**

**Dr. Steven L. Bryant**

**OCTOBER 2005**

**DE-FC26-04NT15524**

**The University of Texas at Austin**
**Dr. Steven L. Bryant, PI**
**Petroleum & Geosystems Engineering**
**One University Station C0300**
**Austin, TX 78712-0228**

**&**

**Lawrence Berkeley National Laboratory**
**Dr. Tamas Torok, PI**
**Berkeley, CA**

# DISCLAIMER

This report was prepared as an account of work sponsored by an agency of the United States Government. Neither the United States Government nor any agency thereof, nor any of their employees, makes any warranty, express or implied, or assumes any legal liability or responsibility for the accuracy, completeness, or usefulness of any information, apparatus, product, or process disclosed, or represents that its use would not infringe privately owed rights. Reference herein to any specific commercial product, process, or service by trade name, trademark, manufacturer, or otherwise does not necessarily constitute or imply its endorsement, recommendation, or favoring by the United States Government or any agency thereof. The views and opinions of authors expressed herein do not necessarily state or reflect those of the United States Government or any agency thereof.

# ABSTRACT

Microbial enhanced oil recovery (MEOR) has been touted an attractive method for recovering bypassed oil, yet there is little information on the major underlying mechanism whereby biomass plugs thief zones and diverts flow to oil-bearing zones. This research project seeks to understand microbial growth in porous media and to identify parameters that can be used to model and predict the degree of microbial plugging necessary to improve sweep efficiency for incremental oil production in U.S. fields. Progress in year 1 allows us now to monitor and quantify biomass growth within rock formations. We have also acquired pre-growth high-resolution CT images of cores, which will allow us to determine how growing biomass arranges itself in the pore spaces of rock. This will provide quantitative validation of our theoretical models of the effect of this growth on the permeability of the rock. We have also recovered a water/oil sample from an operating field (Occidental Petroleum's Midland Farms Unit in west Texas) which will be analyzed by 16SrRNA "gene chip" technology at Lawrence Berkeley National Laboratory. This will be a first step to answering a key question for this technology: what biota are indigenous to various reservoirs.

# TABLE OF CONTEXTS

DISCLAIMER ..... ii
ABSTRACT ..... iii
TABLE OF CONTEXTS ..... v
EXECUTIVE SUMMARY ..... 1
RESULTS OF WORK DURING REPORTING PERIOD ..... 3
Experimental methods/Approach ..... 3
Results and Discussion. ..... 4
Task 2 – Modeling Biomass Growth and Its Consequences ..... 5
Task 3 – Identifying Indigenous Organisms in Oil Reservoirs ..... 7
Conclusion. ..... 7
Milestones. ..... 7
Cost & Schedule Status. ..... 8
Cost Status Summary Worksheet ..... 9
Summary of Significant Accomplishments. ..... 10
Actual or Anticipated Problems. ..... 10
Description of Technology Transfer Activities. ..... 10

**DOE Award Number: DE-FC26-04NT15524**
**"Mechanistic Understanding of Microbial Plugging for Improved Sweep Efficiency"**
**Dr. Steven L. Bryant, Principal Investigator**
**Annual Report, Submitted October 2005**
**Reporting Period: October 1, 2004 – September 31, 2005**

# EXECUTIVE SUMMARY

Microbial enhanced oil recovery (MEOR) has been touted an attractive method for recovering bypassed oil, yet there is little information on the major underlying mechanism whereby biomass plugs thief zones and diverts flow to oil-bearing zones. This research project seeks to understand microbial growth in porous media and to identify parameters that can be used to model and predict the degree of microbial plugging necessary to improve sweep efficiency for incremental oil production in U.S. fields. The research was organized into three phases: Phase 1, Laboratory Core-flood Experiments; Phase II, Developing Quantitative Relationships; and Phase III, Inventory of Reservoir Microbiota.

Much of this first year's work has been in Phase I, specifically the design and construction of laboratory core-flood columns and the techniques for imaging of biomass within these columns. We have completed the design and fabrication of Berea sandstone columns with the capability of: (1) continuous, non-pulsing flow at representative field, waterflood velocities; (2) continuous detection of pressure increases from microbial plugging; and (3) discrete time interval determination of chemical indices for monitoring biofilm growth in the rock. Although we now can monitor and quantify growth within rock formations, a second question must be answered on how this growth is arranged in the pore spaces of rock. An obvious question is whether the biofilm is found in pore throats, pore lumens or both. To answer this question, we originally proposed High Resolution X-ray Computed Tomography (HRXCT) and/or Magnetic Resonance Imaging (MRI) for visualizing growth. HRXCT has been selected, and a specific sample treatment has been devised to address its inherent weakness of imaging growth where the densities of the biofilm and pore water are very similar. We will "dope" the biofilm with uranyl ions ($UO_2^{+6}$) which have an affinity for nuclear DNA and will provide contrast by absorbing more x-rays than the surrounding water. We simply will "stain" the cells with a uranyl acetate solution and then rinse away unbound uranium. The maximum resolution of HRXCT imaging of Berea sandstone is 10 microns which is well within the Berea pore space dimensions but 10X greater than the average cell size of the *Pseudomonas aeruginosa* PAO-1 culture. Thus the limitation of the imaging method is that the biofilm must be a multiple-cell cluster larger than 10 microns.

The work in Phase II follows two tracks, one in determining the effect of biomass growth on permeability via predictive geometric models, the other in assessing the microbial growth kinetics and nutrient stoichiometry. During the first year of work, the focus has been on the first track, pending the establishment of laboratory protocol. Biofilm growth

on the grains was modeled numerically by assuming uniform growth of a biomass layer on the surface of all grains in a model porous medium (a dense random packing of equal spheres.) The geometry of the pore space at any stage of simulated biofilm growth is determined from knowledge of positions of all the spheres and the thickness of the biofilm. The geometry provides the boundary conditions necessary for solving the fluid flow equations. The model predicts a power-law decrease in permeability with the volume of pore space occupied by biomass.

It is important to note that this prediction is completely mechanistic; no adjustable parameters enter the calculation. Thus this behavior will serve as a baseline for evaluating the mechanism by which biofilms reduce permeability. That is, if experiments show the same trend, then we have strong evidence of uniform biofilm growth. If experiments do not agree with this prediction, then we have strong evidence that uniform biofilms are *not* occurring. Future work will obtain similarly *a priori* predictions for other styles of microbial growth within the porous medium, e.g. microcolonies.

Phase III, Inventory of Reservoir Microbiota, will be performed by Lawrence Berkeley National Laboratory partner personnel when funding becomes available. A recovery well water/oil sample from Occidental Petroleum's Midland Farms Unit in west Texas has been sent to LBNL for microbial identification by 16SrRNA "gene chip" technology.

# RESULTS OF WORK DURING REPORTING PERIOD

## *Experimental methods/Approach*

Technical work was organized into three Phases: Phase I, Laboratory Core-flood Experiments; Phase II, Developing Quantitative Relationships; and Phase III, Inventory of Reservoir Microbiota. Each Phase has milestones and a corresponding technical task, and each Task has deliverables.

Phase I research consisted of the design and construction of Berea sandstone, laboratory columns and the imaging of biofilm within the rock. A pure bacterial culture, capable of biofilm growth, was obtained, and a mineral culture medium was selected for experiments to quantify growth within the rock by measuring the uptake of carbon growth substrate. A relationship could be established between the amount of growth substrate consumed and the amount of growth (cell numbers). The Berea laboratory columns are equipped with sensitive pressure transducers for monitoring permeability changes as bacterial growth occludes the pores. Therefore the experimental design was to continuously follow pressure changes across the columns and to monitor the chemicals that quantify growth. The other information from these experiments was the determination of the microscopic geometry of biofilm growth. That is, a method had to be developed to visualize or image the growth in the rock in order to gain insights on the location of biofilm within pores and its possible effect on permeability. High Resolution X-ray Computed Tomography (HRXCT) was selected for imaging growth. Preliminary imaging with blank columns has shown that pores can be visualized at a resolution distance of 10 micrometers (microns).

In Phase II, to model the effect of biofilm growth on permeability mechanistically, we use physically representative models of well-sorted sands and sandstones (as used in the experiments). We model the consequences of several modes of biomass growth at the grain scale. These include uniformly increasing biofilm thicknesses on all grain surfaces, preferential local growth of biofilms (e.g., in regions where local flow velocities are smaller), and nonuniform distributions of microorganisms.

Phase III research is to be conducted at Lawrence Berkeley National Laboratory (LBNL). A sample of produced water and oil from a west Texas field has been sent to LBNL for microbial analysis, and this will be followed by other samples with diverse temperature and chemical conditions. The Affymetrix Integrated GeneChip Instrument, that uses custom-made oligonucleotide chips to known rRNA gene sequences of 9,000 microbial species, will be used to screen the samples. Depending on the results of this screening, a bacterial artificial chromosome (BAC)-based metagenome library will be established for searching for specific metabolic capabilities that may be unique to reservoir microbes.

## *Results and Discussion.*

### Task 1 – Quantifying Biofilm Growth in Porous Media.

This task was part of Phase I research and was structured as a methods development and data collection task to obtain growth data that could be used to develop quantitative relations for predicting sweep efficiency. The deliverables are: (1) images that permit understanding of biofilm architecture/geometry; (2) quantification of biofilm growth in rock; and (3) permeability and nutrient chemical data vs time for column experiments.

*Progress.* Figure 1 is a photograph of the final iteration of core columns developed for this task. A 1" dia. x 2" long, Berea (400 mD, ~20% porosity) sandstone is fitted with polycarbonate, machined end units (1/16" headspace) and "potted" in epoxy resin. A nichrome wire within the epoxy bedding allows reproducible alignment for imaging. The end units are tapped and fitted with 1/8" Swagelok®, PTFE connectors at each end, and these are attached to 1/8" PTFE tubing. All of the materials are compatible with 70% isopropanol used to sterilize the column. The column is pumped with an FMI, variable-rate micro-pump set at 1.2 mL/hr, which is consistent with typical, oil-field, water-flood rates of 1 ft/day interstitial velocity. Validyne pressure transducers (0-15 PSI) are positioned at both ends of the column to monitor pressure build-up from growth. Pressure readings are continuously monitored on the computer using an A/D board and signal processing from National Instruments. Due to the shortness of the Berea column (2") the column is not fitted with additional pressure monitoring ports. A schematic of the entire apparatus is given in Figure 2.

The bacterial culture selected for biofilm experiments is *Pseudomonas aeruginosa* strain PAO-1, a well-studied soil/water microbe whose biofilm-forming properties have been well studied because this organism causes opportunistic infections in lungs of cystic fibrosis patients. Dworkin-Foster mineral medium with 0.1% sodium acetate (carbon & energy source) is the growth medium in the column and plumbing shown in Figure 2. The pump head, pressure transducers, valve and tubing are maintained at precisely 43-44$^{o}$C except for the column and approximately 6" of tubing on either side which are exposed to 25$^{o}$C. *Ps. aeruginosa* grows well at 25$^{o}$C but not at 43-44$^{o}$C, yet it does not die at the elevated temperature. By maintaining all the plumbing at growth-inhibiting 43-44$^{o}$C and the column at 25$^{o}$C, it is possible to confine growth to the column.

Monitoring real-time growth in the column is achieved by following the consumption of acetate, the carbon and energy source. For example, the sampled medium after acidification with HCL contains approximately 750 mg/L acetic acid. Gas chromatographic analysis (0.53mm x 30m DB-1 column, FID detection, 120$^{o}$C isothermal) of acetate enables the correlation with growth by comparison with control, batch liquid (non-column) experiments which follow cell number (via plate counts), cell protein and acetate consumption from growth. Thus we can monitor growth in the Berea sandstone column by continuously monitoring pressure, by periodically analyzing for acetate, and at the conclusion of the experiment by extracting total cell protein in 1N NaOH and analyzing for total cell protein. The critical analytical procedure is

visualization of growth by High Resolution X-ray Computed Tomography (HRXCT), and this is summarized below. The proposal stated that both HRXCT and Magnetic Resonance Imaging (MRI) would be used, the former facility in the Geology Department and the latter in the Department of Petroleum and Geosystems Engineering. After the project was awarded, the proposed MRI upgrades were vetoed, and the MRI has been mothballed. We contacted DOE's Pacific Northwest Laboratory which has an MRI for analyzing rock cores. However, we have lost the ability to do MRI imaging in the necessary timely manner. Therefore, we will rely hereafter on HRXCT which we believe in retrospect will give the best results.

After trial HRXCT runs we have achieved resolution of void (pore) spaces down to 10 microns. This distance is roughly the length of a chain of 10 *Pseudomonas aeruginosa* cells. Therefore, larger clusters of cells can be visualized, but not single cells or micro-colonies smaller than ~25 microns. HRXCT imaging works best when there is a large density (X-ray absorbing) difference between materials. Both pore water and biomass have similar densities and cannot be readily distinguished. Therefore, we are developing a step involving the "doping" of biofilm with uranium as a contrasting agent. Uranyl ions ($UO_2^{+6}$) administered to the column after maximal biofilm growth, are selectively incorporated into dsDNA. At this stage of the project we have not performed this doping experiment, but we have developed the procedure. Specifically, the column will be pumped at fast flow with 5 mM uranyl acetate containing 50 uL per mL of 9:1 acetone:toluene to permeabilize the cells to $UO_2^{+6}$ which may not be readily transported. This will be followed by 2% NaCl to flush out unbound uranyl ions and then HRXCT imaging. A control column with no growth will be imaged to verify predictions that uranyl ions will bind only to the biomass and not nonspecifically to the column.

In summary, the progress for Task 1 has been largely a successful methods development task. We have completed two-thirds of the Phase I objectives; the final objective is the collection of column data and imaging in order to develop quantitative relationships for predicting sweep efficiency.

## Task 2 – Modeling Biomass Growth and Its Consequences.

The work in Phase II follows two tracks, one in determining the effect of biomass growth on permeability via predictive geometric models, the other in assessing the microbial growth kinetics and nutrient stoichiometry. During the first year of work, the focus has been on the first track, pending the establishment of laboratory protocol. The random packing of equal spheres measured by Finney (who determined the spatial coordinates of some 8000 spheres, thereby completely determining the geometry of the grain space and the void space in the packing) was used as a model sediment of very well sorted sand grains. Biofilm growth on the grains was modeled numerically by increasing the radius of all the grains uniformly, without moving the centers of the grains. The uniform growth represents a limiting case, in which (i) microbes are assumed to be uniformly distributed on all solid surfaces throughout the porous medium and (ii) nutrients are present at uniformly large concentrations. The geometry of the pore space at any stage of simulated

biofilm growth is determined from knowledge of positions of all the spheres and the thickness of the biofilm. The geometry provides the boundary conditions necessary for solving the fluid flow equations.

We solve a simplified version of the fluid flow equations. The key idea is a local idealization: flow rate through a pore throat is assumed to be proportional to the difference in pressures in the two pores connected by the throat. This gives rise to the *network model*. The resistance to flow in a throat is a function only of the geometry of the throat; recall the geometry of all features of pore space is known. The permeability of the model sediment+biofilm is simply the ratio of total fluid flow through the packing to the applied pressure drop. The graph below shows fraction of original permeability remaining, $\frac{k}{k_0}$, as a function of the volume of the biofilm.

It is important to note that this prediction is completely mechanistic; no adjustable parameters enter the calculation. Thus this behavior will serve as a baseline for evaluating the mechanism by which biofilms reduce permeability. That is, if experiments show the same trend, then we have strong evidence of uniform biofilm growth. If experiments do not agree with this prediction, then we have strong evidence that uniform biofilms are *not* occurring. Future work will obtain similarly *a priori* predictions for other styles of microbial growth within the porous medium, e.g. microcolonies.

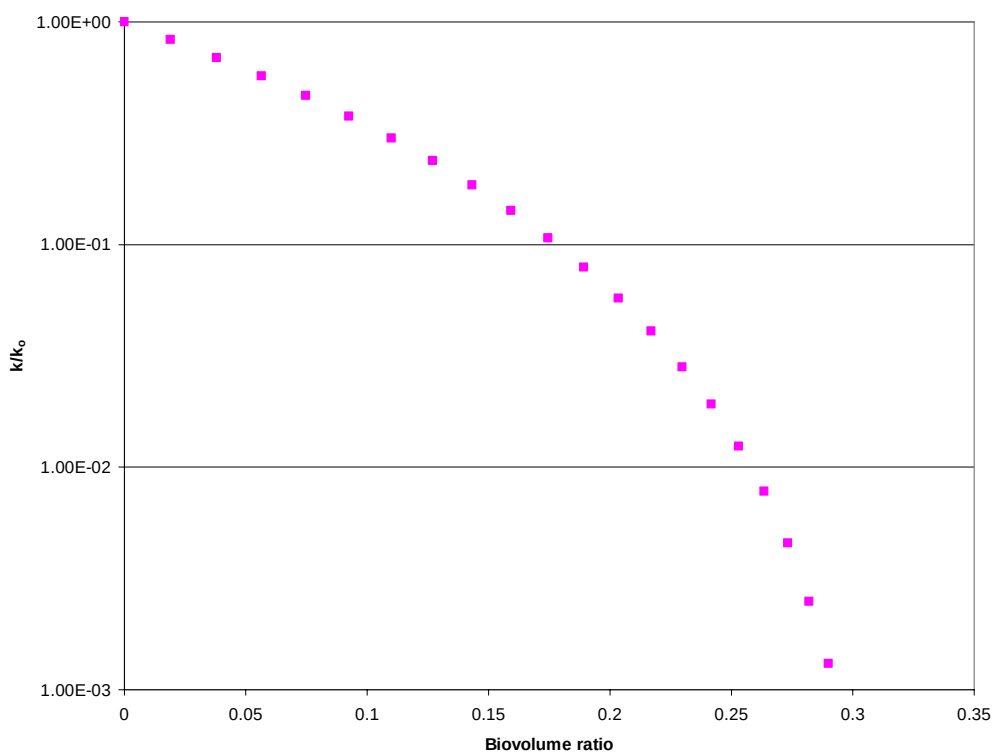

## Task 3 – Identifying Indigenous Organisms in Oil Reservoirs.

The proposed first step was analysis of produced reservoir water by high-throughput microarray (gene chip) for rRNA gene sequences that uniquely identify the resident microbes. The strategy was to first examine produced water whose temperature and other indicators are suggestive of microbial activity. To this end, a sample of produced water from Occidental Petroleum's Midland Farms Unit (west Texas) has been obtained and shipped to Lawrence Berkeley National Labortory (LBL) the partner in this grant. This 5,000 depth formation is a relatively low 38$^{o}$C and has high (500 – 800 ppm) $H_2S$ which suggests the presence of sulfate-reducing bacteria (SRB). The native formation water picks up approximately 1,600 ppm sulfate due to dissolution of anhydrite ($CaSO_4$) ($K_{sp}$ = $10^{-4}$).

## *Conclusion.*

A laboratory core-flood apparatus has been designed and assembled for studying biofilm growth in rock. HRXCT imaging has been conducted satisfactorily on blank cores as a "before-growth" benchmark and to develop the method. The next step is the first-ever imaging of biofilm growth in intact rock. Phase II on Developing Quantitative Relationships relative to microbial plugging will use growth data from the column experiments. Therefore, no conclusions can be drawn until this information is available. One reservoir water/oil sample has been collected for microbial analyses in Phase III, Inventory of Reservoir Microbiota, but there are no data at this time.

## *Milestones.*

Phase I

1. Assembly and operation of core column systems: **complete**
2. Optimization of biofilm visualization using HRXCT and MRI: **in progress; will be completed by Jan. 06. Use of MRI has been abandoned.**
3. Completed data sets of growth kinetics, biomass measurements and permeability changes at varying flow rates and carbon substrate concentrations: **in progress; will be complete by Mar. 06.**

Phase II

1. Working rate expression for biomass growth under laboratory conditions: **in progress (preliminary expression (Monod kinetics) appears reasonable for batch data)**
2. Validated predictive relation between biomass growth and permeability: **in progress (prediction obtained, awaiting experiments)**
3. Quantitative evaluation of local (pore-to-pore) variation in flow patterns due to biomass growth and consequent feedback: **scheduled for Y2-Y3**
4. Quantitative evaluation of nutrient propagation for biomass growth in field: **scheduled Y3**

Phase III

1. Collection of produced water with representative microbiota from typical U.S. reservoirs followed by successful isolation of genomic DNA: **one sample collected, genomic DNA isolation in progress; two more reservoirs to be sampled.**
2. Identification of species in produced water using microarray analyses: **in progress; most of work scheduled for years 2 & 3.**
3. Construction of bacterial artificial chromosome (BAC)-based metagenome library: **not started; scheduled for years 2 & 3.**
4. Imaging of biofilms in cores using synchrotron-based FT-IR, *if time permits*: **not started; scheduled for years 2 & 3.**

## *Cost & Schedule Status.*

The project is proceeding as anticipated both in terms of schedule and in terms of costs. Cost status summary worksheet details approved budget by budget period and actual costs incurred as well as cost share details.

## Cost Status Summary Worksheet

| | Budget-1st-Increment Funding | 2nd Increment Funding | Current Yr Budget | Expenditures thru 8/31/05 | Sept '05 Expensed | Sept. Encumbrances | Remaining Balances | Anticipated use of remaining funding |
|---|---|---|---|---|---|---|---|---|
| Salaries ...12 | $52,440 | $19,194 | $71,634 | $31,224 | 2453 | 8474 | $31,936 | Support PI salary & FB for 1.5 month |
| Fringe Benefits..14 | $17,369 | $5,541 | $22,910 | $6,420 | 346.28 | $2,776 | $13,715 | plus 1 student for 4.5 month |
| MO&E Sub. 50 | $7,758 | $9,395 | $17,153 | $11,081 | 737.04 | 804.74 | $5,268 | Anticipated research materials needs . |
| Publication Costs58 | | | $0 | | | 0 | $0 | |
| ComputerSup 67 | | | $0 | | | 0 | $0 | |
| Tuition/Fees 71 | $13,650 | $6,400 | $20,049 | $7,112 | | 6600 | $6,337 | Support 2students |
| Travel 75 | $2,000 | $4,400 | $6,400 | | | | $6,400 | Support technical presentations at SPE Mtgs/Conferences |
| Equipment 80 | $32,000 | $0 | $32,000 | | | | $32,000 | Examining protype instrumentation w/expectatio |
| Overhead 90 | $39,783 | $19,265.00 | $59,048 | $24,187.66 | | | $34,860 | that more intensive equipment will be availale in coming year. |
| Income 91 | $165,000 | $64,194 | $229,194 | | | | | Overhead is automated calculated as expenses are incurred. |
| | | | $0 | | | | | |
| | $165,000 | $64,195 | $229,195 | $80,024 | $3,536 | $18,654 | $126,981 | |

| | | | | | | |
|---|---|---|---|---|---|---|
| Cost-Share | | $50,823 | | | | |
| | Breakdown by Account: | | | | | |
| SB | Salaries | $4,171 | | | | |
| SB | FB | $1,168 | | | | |
| | Sub Total | $5,339 | | | | |
| | Overhead | $2,669 | | | | |
| SB | Total | $8,008 | | Cost Share | Acct 14-3085-20XX | |
| LCP | Salaries | $11,792 | Cost Split between the Following Projects | | | |
| LCP | FB | $3,420 | Acct # | 14-9719-18XX | $9,810 | |
| | Sub total | $15,211 | Acct # | 14-7483-3810 | $13,007 | |
| | Overhead | $7,606 | | | | |
| LCP | Total | $22,817 | | | 22,817 | |
| Equipment Usage | | $8,750 | Contribution-in-kind (L.Britton Equipment) | | | |
| Student Support | Salaries | $5,558 | | | | |
| | FB | $1,945 | | | | |
| | Sub Total | $7,503 | | | | |
| | OH | $3,747.00 | | | | |
| | Total | $11,250 | Acct # 20-3085-2457 | | | |
| Cost Share totals | | $50,825 | | | | |

## *Summary of Significant Accomplishments.*

Methods and apparatus for imaging microbial biofilm growth at microscopic level in solid rock have been established for the first time.

## *Actual or Anticipated Problems.*

One of the proposed techniques, Magnetic Resonance Imaging (MRI), has been abandoned due to mothballing of the instrument. Attempt to use the instrument at Pacific Northwest Laboratory was deem unfeasible due to logistical and other considerations. Therefore, the research plan has been altered to modify imaging methods (i.e., uranium doping) and use only the HRXCT.

## *Description of Technology Transfer Activities.*

None at this time.

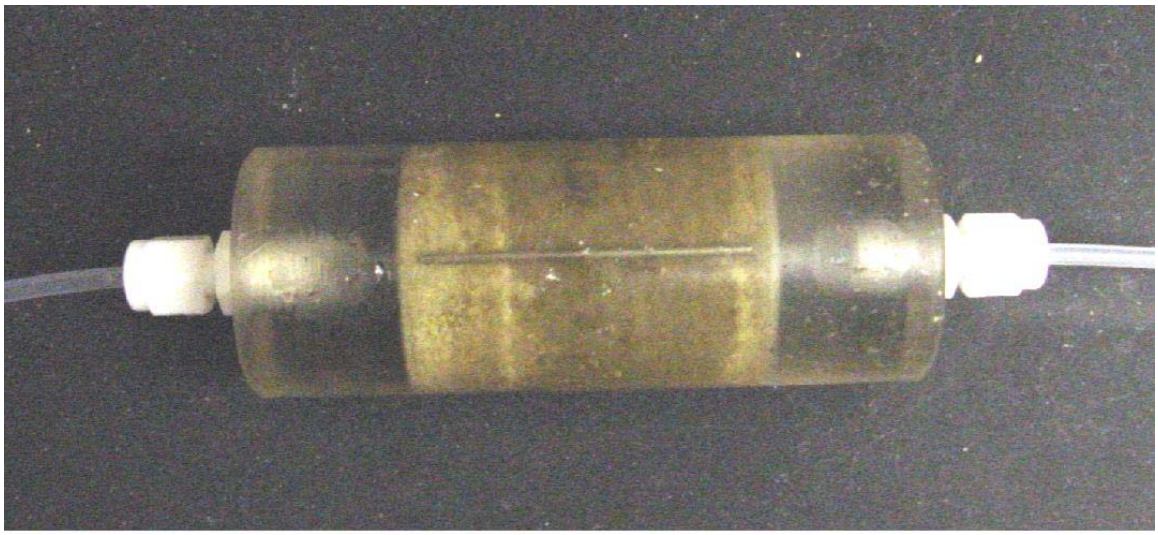

Figure 1. Photograph of Berea Column. The copper wire visible along the middle of the core is used to orient the sample in the CT machine to enable before-and-after comparisons.

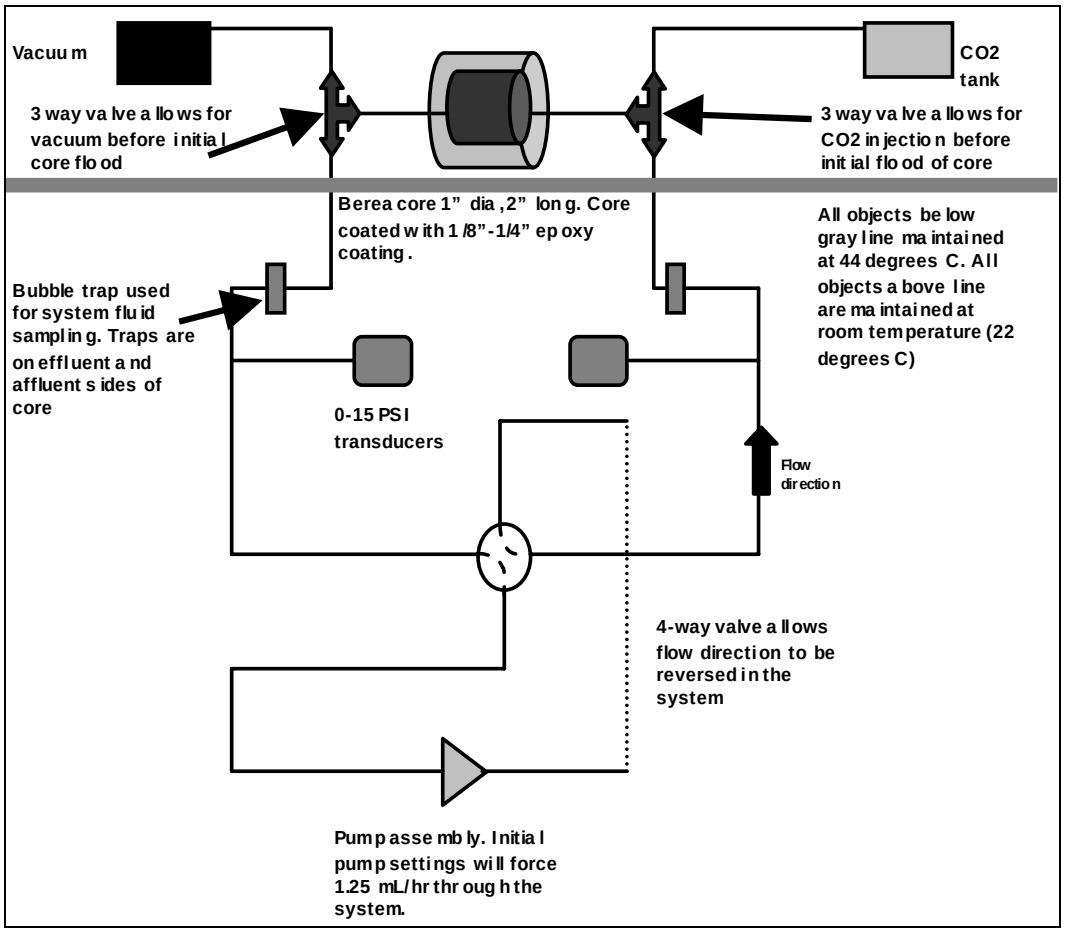


Figure 2. Schematic of Laboratory Core-flood Apparatus

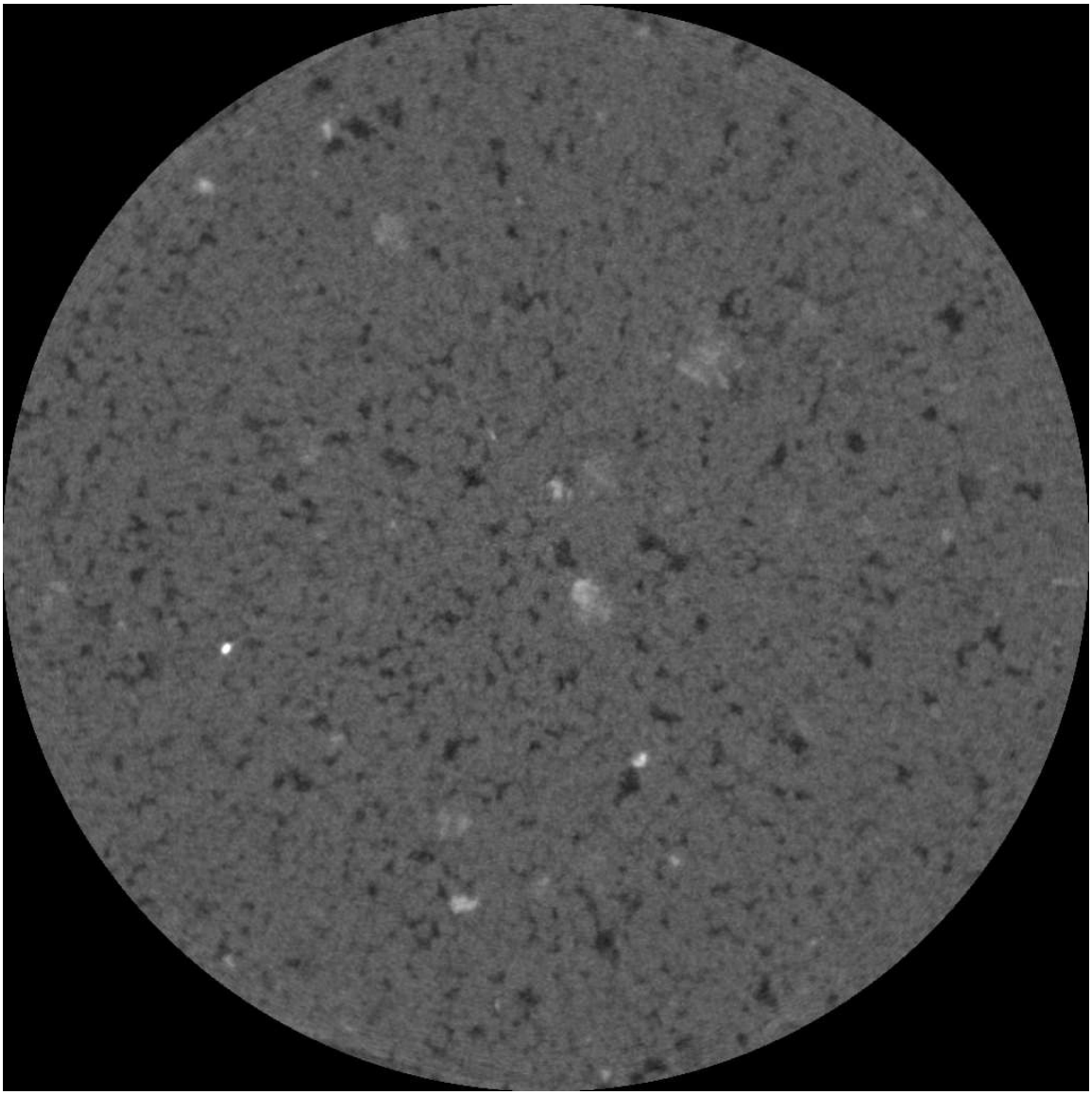

Figure 3. A ten-micron thick slice from the CT image of a Berea sample. The diameter of the sample is one inch. Typical grain sizes are around 200 microns. After microbes are grown within the sample and a new CT image is acquired (see text), comparing the before-and-after images will provide insight into the geometry of the increase in biomass.

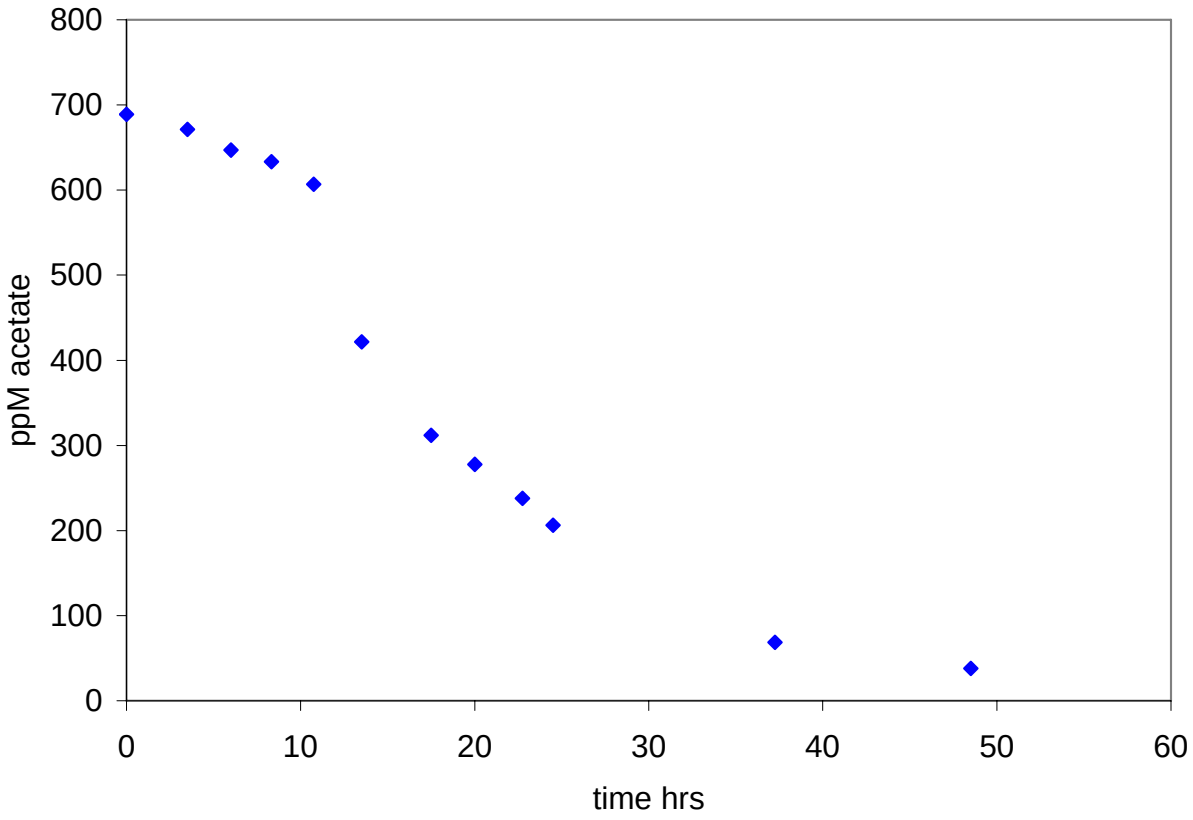


Figure 4. An example growth curve for a batch experiment. The decline in acetate concentration correlates with uptake by the bacteria. Quantitative kinetics models, e.g. Monod expressions, will be fit to this data and validated in the flow experiments.