**DOE/BC/15121-1**

Title: **"Improved Miscible Nitrogen Flood Performance Utilizing Advanced Reservoir Characterization and Horizontal Laterals in a Class I Reservoir – East Binger (Marchand) Unit"**

Type of Report: **Quarterly Technical Progress (Report No. 15121R08)**

Reporting Period Start: **January 1, 2002**

Reporting Period End: **March 31, 2002**

Principal Author/Investigator: **Joe Sinner**

Report Date: **May 13, 2002**

Cooperative Agreement No: **DE-FC26-00BC15121**

Contractor Name & Address: **Binger Operations, LLC**
**P. O. Box 2850**
**Cody, Wyoming 82414**

DOE Project Manager: **Gary Walker, National Petroleum Technology Office**

## Disclaimer

"This report was prepared as an account of work sponsored by an agency of the United States Government. Neither the United States Government nor any agency thereof, nor any of their employees, makes any warranty, express or implied, or assumes any legal liability or responsibility for the accuracy, completeness, or usefulness of any information, apparatus, product, or process disclosed, or represents that its use would not infringe privately owned rights. Reference herein to any specific commercial product, process, or service by trade name, trademark, manufacturer, or otherwise does not necessarily constitute or imply its endorsement, recommendation, or favoring by the United States Government or any agency thereof. The views and opinions of authors expressed herein do not necessarily state or reflect those of the United States Government or any agency thereof."

## Abstract

Work associated with Budget Period 1 of the East Binger (Marchand) Unit has been completed. The final Budget Period 1 tasks completed in the first quarter of 2002 were the evaluation of development alternatives for the pilot area and the designing of upgrades and additions to facilities.

Four principal development alternatives utilizing different combinations of vertical and horizontal wells have been evaluated for the pilot project to be implemented in Budget Period 2. The final plan of development includes drilling three new horizontal producing wells and one new injection well, converting five producers to injection service, and expanding injection capacity for the field.

Significant improvement has been gained in the understanding of fluid flow mechanisms in the field. Field performance analysis, differences between model forecasts and field data, certain log data, and a study of regional stress orientations indicate that initial assumptions in the construction of the reservoir simulation model regarding the dominant fluid flow direction in the field were incorrect. Work is planned for Budget Period 2 to address these issues with the model.

A number of alternatives for expanding processing and injection capacities of the Nitrogen Management Facility, or NMF, have been evaluated. Injection capacity will be increased in Budget Period 2, while the benefits of additional processing capacity are not yet sufficiently understood to justify implementing this project at this time.

# TABLE OF CONTENTS

**INTRODUCTION** 1

**EXECUTIVE SUMMARY** 1

**RESULTS AND DISCUSSION** 2

**TASK 1.1.6 – EVALUATE HORIZONTAL PERFORMANCE OR OTHER DEVELOPMENT DESIGN** 3
**TASK 1.1.7 – DESIGN UPGRADES & ADDITIONS TO FACILITIES** 9

**CONCLUSION** 11

# LIST OF GRAPHICAL MATERIALS

FIGURE 1. EAST BINGER UNIT NET PAY MAP. THE BLUE BOX SURROUNDS THE PILOT AREA. .....12

FIGURE 2. PILOT MODEL FORECAST SCENARIO 1 – HORIZONTAL INJECTORS AND HORIZONTAL PRODUCERS IN A PATTERN FLOOD.....13

FIGURE 3. PILOT MODEL FORECAST SCENARIO 2 – HORIZONTAL INJECTORS AND HORIZONTAL PRODUCERS IN A PERIPHERAL FLOOD. .....14

FIGURE 4. PILOT MODEL FORECAST SCENARIO 3 – VERTICAL INJECTORS AND VERTICAL PRODUCERS IN A PATTERN FLOOD. .....15

FIGURE 5. PILOT MODEL FORECAST SCENARIO 4 – VERTICAL INJECTORS AND HORIZONTAL PRODUCERS IN A PATTERN FLOOD. .....16

FIGURE 6. PILOT MODEL HISTORY MATCH OF GOR FOR THE ENTIRE PILOT AREA. .....17

FIGURE 7. PILOT MODEL HISTORY MATCH OF GOR FOR WELL 48-1. NOTE WHEN WELL 49G-1 STOPPED INJECTING. .....18

FIGURE 8. MODEL LAYER 7 POROSITY MAP, INDICATING THE ORIENTATION OF THE GRID ON THE FIELD.....19

FIGURE 9. FIELDWORK PLANNED FOR THE PILOT - SHOWN IN RED. EITHER 37-3H OR 44-1 WILL BE CONVERTED TO INJECTION. .....20

FIGURE 10. SIMPLIFIED NITROGEN MANAGEMENT FACILITY (NMF) PROCESS DIAGRAM AS IT EXISTS TODAY.....21

FIGURE 11. SIMPLIFIED NMF PROCESS DIAGRAM WITH PLANNED INJECTION COMPRESSION EXPANSION.....22

FIGURE 12. PRODUCED GAS GATHERING SYSTEM FOR THE NORTHERN AND WESTERN PORTIONS OF THE EAST BINGER UNIT. .....23

# Quarterly Technical Progress Report – 4th Quarter 2001

## Introduction

Budget Period 1 of the East Binger Unit DOE Project is a preparation period for the field implementation of a pilot project in Budget Period 2. Included among the tasks of Budget Period 1 are collecting data, including horizontal well performance data, screening the field and selecting a pilot area, building a pilot area reservoir simulation model, evaluating development alternatives for the pilot area, and designing upgrades and additions to the field's facilities.

Previous Quarterly Technical Progress Reports have documented these activities. Data gathering efforts are discussed in each of the previous reports. Horizontal well performance data is presented in reports 15121R06 (3Q 2001) and 15121R07 (4Q 2001), while other data gathered for the project – gas analyses, flow profiles, and pressure transient data – are presented in reports 15121R01 (2Q 2000) through 15121R05 (2Q 2001).

Information related to the screening and selection of a pilot area is presented in reports 15121R01 (2Q 2000), 15121R03 (4Q 2000), and 15121R04 (1Q 2001). The construction of the pilot area reservoir simulation model is discussed in reports 15121R04 (1Q 2001) through 15121R07 (4Q 2001).

The final tasks to be completed in Budget Period 1 are the evaluation of development alternatives for the pilot area and the designing of upgrades and additions to facilities. Incorporating the information assimilated in the other tasks, these efforts will define the work plan for Budget Period 2, and are presented below.

## Executive Summary

Four principal development alternatives have been evaluated for the pilot project in the East Binger Unit. These include three scenarios utilizing a line-drive pattern configuration – horizontal injectors and producers, vertical injectors and producers, and vertical injectors and horizontal producers – and one scenario utilizing a peripheral flood configuration.

Results from model forecasts indicate that existing capacities of the Nitrogen Management Facility, or NMF, will severely limit the value obtained from additional development work. Especially limiting in the near-term, due to planned conversions of wells from producers to injectors, is the injection compression capacity of 19 MMcfd. Later, as gas production continues to increase, most dramatically due to the drilling of new producing wells, more and more wells will have to be shut-in due to gas processing capacity limits.

Even with expanded facility limits, however, results of model forecasts were somewhat discouraging, prompting a more detailed review of the well by well history match and, ultimately, the initial assumptions regarding factors controlling fluid flow and the reservoir description of the simulation model. It has been concluded that some key initial assumptions were incorrect. It was assumed that the dominant flow direction within the field would likely be either northwest-southeast, in line with the orientation of the main sand body, or perpendicular to that, i.e., northeast-southwest, due to the expected orientation of hydraulic fracture treatments. These assumptions on dominant flow direction and fracture orientation appear to have been incorrect. Field performance data and differences between model forecasts and field data suggest the dominant flow direction in the field is approximately east-west, while log data and a study of regional stress orientations suggest that fractures should orient in roughly the same direction; i.e., east-west. Work is planned for Budget Period 2 to address these issues with the model.

The pilot project development plan includes drilling three new horizontal producers and one new vertical injector, converting five producers to injections service, and expanding the injection capacity at the NMF. Additional work is planned to evaluate the benefits of horizontal injectors. In the model forecasts, horizontal producing wells out-perform vertical producing wells, on both a recovery and economic basis. This is despite the incorrect assumptions and modeling of dominant flow direction, which would tend to skew the results in favor of vertical wells.

A number of alternatives for expanding the NMF processing and injection capacities have been evaluated. Injection capacity will be increased from 19 MMcfd to 23 MMcfd by increasing the output of nitrogen from the cryogenic air separation unit and installing a third injection compressor in parallel with the two existing injection compressors. This will be implemented in Budget Period 2.

There are more alternatives and options associated with increasing processing capacity. The efficiencies of NGL and methane gas extraction from the produced gas stream increase with increasing levels of refrigeration, compression, and power consumption. The planned expansion will be a second and separate processing system which includes refrigeration expected to yield 40% to 60% NGL recovery, compared to 70% to 80% in the existing system, and no methane recovery. The precise design and implementation of this system will not occur until the gas production rates and compositions from the new horizontal producing wells is known. Expansion of processing capacity is not part of the Budget Period 2 work plan.

## Results and Discussion

The following is a detailed review of the work conducted in this reporting period.

*Task 1.1.6 – Evaluate Horizontal Performance or Other Development Design*

There are two components to this task – forecasting development scenarios with the pilot model and finalizing a pilot project development plan and design. It was intended that the results of the model would be used almost exclusively for optimizing the development scenario. However, after running a number of forecast cases, it became apparent that there were issues with the model that will require additional work to make specific well forecasts more reliable. It was still used to guide the development plan, but other reservoir performance analysis was also used in the planning, and some aspects of the plan will not be finalized until some time in Budget Period 2.

Forecast Development Scenarios

Figure 1 is a net pay map of the field with a box indicating the pilot area. It was discussed in the previous Quarterly Report (15121R07) that four development scenarios would be investigated with the pilot-area model:

(1) "HI-HP (Pat)" - drill horizontal producers and horizontal injectors in a pattern flood configuration;
(2) "HI-HP (Per)" - drill horizontal producers and horizontal injectors in a peripheral flood configuration;
(3) "VI-VP" - drill vertical producers and vertical injectors in a pattern flood configuration; and
(4) "VI-HP" - drill horizontal producers and vertical injectors in a pattern flood configuration.

Each scenario also involves converting some existing producing wells to injection, with the specific wells varying depending on the scenario. The pattern configuration for Scenarios 1, 3, and 4 is a line drive, based on observed flow patterns in the field. The peripheral configuration of Scenario 2 involves placing injection wells in the thin peripheral areas of the reservoir and producing wells in the thick central portion of the reservoir. The specific well plans associated with each of the initial runs of these scenarios (or "Cases") are listed in Table 1 and shown in Figures 2 (Scenario 1) through 5 (Scenario 4).

Initial cases were run with no increase in injection or plant processing capacity. It was clear from these cases that plant expansion would be necessary to maximize benefit from additional development, as each of the cases actually resulted in lost reserves. This was in part due to constraints associated with simulator well-testing logic, but the conclusion from these cases was still that plant expansion would be required if a number of new wells were added to the injection and/or production capacity.

The next set of cases included plant expansions. Injection capacity was increased from 19 MMCFD to 27 MMCFD and processing capacity was increased form 16 MMCFD to 24 MMCFD. Results of these cases, though positive and still limited by the testing logic,

were still somewhat discouraging. All involved drilling nine new wells (horizontal or vertical), but added incremental reserves of only 900 MBOE (Scenario 1) to 2100 MBOE (Scenario 2), as shown in Table 2. This led to further review of the model to better understand these results.

**Table 1. Pilot Model Forecast Cases**

| **Base Case**<br>Continue w/ Current Wells As Is | **Case 1b**<br>**HI-HP (Pat)**<br>Horizontal Injectors, Horizontal Producers (Pattern) | **Case 2b**<br>**HI-HP (Per)**<br>Horizontal Injectors, Horizontal Producers (Peripheral) | **Case 3b**<br>**VI-VP**<br>Vertical Injectors, Vertical Producers (Pattern) | **Case 4b**<br>**VI-HP**<br>Vertical Injectors, Horizontal Producers (Pattern) |
|---|---|---|---|---|
| Conversions (0) | Conversions (5) | Conversions (3) | Conversions (5) | Conversions (5) |
| None | 37-3H | 36-2 | 37-3H | 37-3H |
| | 57-1 | 48-1 | 57-1 | 57-1 |
| | 59-1 | | 59-1 | 59-1 |
| | 61-1 | 61-1 | 61-1 | 61-1 |
| | 65-1 | | 65-1 | 65-1 |
| New Prod (0) | New Prod (5) | New Prod (5) | New Prod (7) | New Prod (7) |
| None | 44-3H (Horiz) | 44-3H (Horiz) | 44-3 (Vert) | 44-3H (Horiz) |
| | 45-3H (Horiz) | 45-3H (Horiz) | 45-3 (Vert) | 45-3H (Horiz) |
| | | 46-3H (Horiz) | 57-3 (Vert) | 57-3H (Horiz) |
| | 58-3H (Horiz) | 58-3H (Horiz) | 58-3 (Vert) | 58-3H (Horiz) |
| | 59-3H (Horiz) | | 59-3 (Vert) | 59-3H (Horiz) |
| | | | 60-2 (Vert) | 60-2H (Horiz) |
| | 65-2H (Horiz) | 65-2H (Horiz) | 65-2 (Vert) | 65-2H (Horiz) |
| New Inj (0) | New Inj (4) | New Inj (4) | New Inj (2) | New Inj (2) |
| None | 58G-4H (Horiz) | 47G-3H (Horiz) | 47G-3 (Vert) | 47G-3 (Vert) |
| | 59G-4H (Horiz) | | | |
| | 60G-2H (Horiz) | 60G-2H (Horiz) | | |
| | | 64G-3H (Horiz) | | |
| | 74G-2H (Horiz) | 74G-2H (Horiz) | 74G-2 (Vert) | 74G-2 (Vert) |
| Net Change (relative to Base Case) | | | | |
| No. of Injectors | +9 | +7 | +7 | +7 |
| No. of Producers | 0 | +2 | +2 | +2 |
| New Horizontal Wells | 9 | 9 | 0 | 7 |
| New Vertical Wells | 0 | 0 | 9 | 2 |

Overall, the model's match of GOR in the pilot area is quite good, as shown in Figure 6. At the well level, the model over-predicts GORs in some wells, and under-predicts them in others, which is expected. Closer inspection of this data, however, combined with a review of other information, led to two conclusions: first, that the dominant flow direction in the field is roughly east-west, and second, that this had not been properly modeled due to incorrect initial assumptions when the model was constructed.

Within the pilot area, the model generally under-predicts the GORs of production wells roughly east or west of injection wells, and over-predicts the GORs of production wells that are not on an east-west line from an injection well. One particular well that exemplifies this problem is well 48-1, located in the northeast corner of the pilot area.

Figure 7 shows the comparison of model-predicted performance of this well's GOR with actual field data. While well 49G-1 to the east was on injection, the model under-predicted the GOR at 48-1. Later, after injection into 49G-1 was stopped (due to a casing failure), the predicted GOR of 48-1 kept increasing, while the actual GOR began to fall. The predicted GOR eventually exceeded the actual GOR. Combined with other predictions similar to this, the evidence became convincing that initial model assumptions had been incorrect.

**Table 2. Pilot Model Forecast Results - Cases 1b - 4b**

| | **Case 1b** **HI-HP (Pat)** | **Case 2b** **HI-HP (Per)** | **Case 3b** **VI-VP** | **Case 4b** **VI-HP** |
|---|---|---|---|---|
| New Producers | 5 - Horizontal | 5 - Horizontal | 7 - Vertical | 7 - Horizontal |
| New Injectors | 4 - Horizontal | 4 - Horizontal | 2 - Vertical | 2 - Vertical |
| Conversions to Inj | 5 | 3 | 5 | 5 |
| Total Investment | $16,100,000 | $15,900,000 | $11,600,000 | $15,100,000 |
| Incremental Oil (Mbbl) | 311 | 458 | 645 | 469 |
| Incremental NGL (Mbbl) | 346 | 886 | 738 | 612 |
| Incremental Gas (MMcf) | 1517 | 4525 | 3794 | 3072 |
| Incremental BOE (MBOE) | 909 | 2099 | 2016 | 1594 |
| Economic Results (see note at bottom) | | | | |
| Internal Rate of Return (%) | 12 | 20 | 16 | 18 |
| Net Present Value @ 10% | $615,000 | $3,541,000 | $2,489,000 | $2,800,000 |
| Development Cost ($/BOE) | 17.70 | 7.58 | 5.75 | 9.48 |
| Payout (years) | 6.3 | 5.1 | 6.0 | 5.4 |
| Project Life (years) | 24 | 26 | 27 | 25 |

Economics based on flat pricing: $20/bbl oil, $15/bbl NGL, and $2.50/mcf gas; and non-escalating operating costs.

When the model was initially created, the primary (x) axis of the grid was oriented in a northwest-southeast direction, in line with the orientation of the main sand body of the reservoir – see Figure 8. Further, and equally important, it was assumed that the orientation of hydraulic fractures was approximately northeast-southwest – perpendicular to the main sand body, or in the "y" direction of the grid.

During the history-matching process, one of the more difficult field performance parameters to match was the GOR; the model generally predicted less gas breakthrough and less gas production than was observed in the field. A number of modifications were made to the reservoir description to enhance the movement of gas from injectors to producers. These included increased permeabilities and decreased pore volumes. Within the pilot area, oil in place is about 40% lower than has been calculated volumetrically (with considerable variance from cell to cell). A reduced pore volume effectively increases the volumetric flood rate, causing a general increase in predicted GORs – the desired result when history matching. It was only after more detailed inspection of the model and other research that it was concluded that initial assumptions on dominant flow direction and fracture orientation were incorrect.

The well to well variances within the model are discussed above. Supporting the conclusion that the dominant flow direction is approximately east-west are indications that fractures would be expected to propagate in this orientation. From wellbore enlargement data, Dart (1989) estimated the direction of maximum horizontal stress in the eastern Anadarko Basin, where the East Binger Unit is located, as North 78° East, or 12° north of directly east.[1] Hydraulic fractures propagate in the direction of maximum horizontal stress.

Additional evidence of the expected frac orientation came from analysis of acoustic log data acquired in 1996 in East Binger Unit well 72-2. From this data, Patterson concluded that the data in the Marchand C Sand shows a general east-northeast principal stress direction and the data in the Medrano Sand, which lies about 800' above the Marchand C Sand, displays an orientation just south of due east.[2] Patterson indicated the data in the Medrano Sand was more conclusive, and suggested a probable fracture system "running in the general east-west direction". Fracture orientation in the Marchand C Sand should be close to fracture orientation in the Medrano Sand, as orientation is controlled by regional stress regimes.

Given this improved understanding of the flow mechanisms in the reservoir, it was concluded that the ideal flood pattern should be a line drive, despite the fact that Scenario 2 yielded the most incremental recovery and the highest rate of return. The focus thus turned to Scenarios 1, 3, and 4. Scenarios 3 and 4 involve drilling two more producing wells – vertical in Scenario 3, horizontal in 4 – relative to Scenario 1, which has two more injection wells. As shown in Table 2, Scenarios 3 and 4 out-performed Scenario 1 by a significant margin. However, the model's tendency to over-predict radial flow relative to east-west linear flow will also lead to bias in predicted performances of individual wells. Specifically, it would cause the model to over-predict recoveries of vertical wells and under-predict recoveries of horizontal wells drilled in an east-west orientation offset by injection to the north and/or south.

In addition to the directional flow bias effect, there is also the impact of the reduced pore volumes, discussed previously, which would cause predicted recoveries of all infill wells to be too low. The combined effects of the directional flow bias and the pore volume reductions are additive for east-west oriented horizontal wells, but they are offsetting for vertical wells. Thus, for the specific scenarios being evaluated, it is believed that the predicted recoveries in Scenarios 1 and 4 are too low, while the net effect on the predicted recoveries in Scenario 3 is unknown.

---

[1] Dart, Richard L., "Horizontal Stresses From Well-bore Breakouts and Lithologies Associated with Their Formation, Oklahoma and Texas Panhandle", *Oklahoma Geological Survey Circular 90*, 1989, pp. 97 – 120.

[2] Patterson, Doug, "The Borehole Acoustic Analysis of the Phillips Petroleum Company East Binger Unit No. 72-02; East Binger Field, Caddo County, Oklahoma; September 17, 1996", report from Western Atlas Logging Services to Phillips Petroleum Company.

Two final cases were run in attempt to improve the performances of, and thus the comparison between, Scenarios 3 and 4. Three producing wells with low recovery – 57-3, 59-3, and 60-2 – were removed from each case. This improved the economic results of both scenarios, as shown in Table 3. Note that this change improved Scenario 4 much more than it did Scenario 3. From these cases, it was concluded that new producing wells in the pilot development plan should be drilled as horizontal wells if they can be cost-effectively drilled. At this point, future injection wells are planned to be drilled as vertical wells, but the economic benefit of horizontal injection wells – Scenario 1 vs. Scenario 4 – cannot be determined until the model is modified to address the aforementioned issues. This is planned for early in Budget Period 2.

**Table 3. Pilot Model Forecast Results - Cases 3b, 4b, and 3c, 4c**

| | Case 3b VI-VP | Case 4b VI-HP | Case 3c VI-VP | Case 4c VI-HP |
|---|---|---|---|---|
| New Producers | 7 - Vertical | 7 - Horizontal | 4 - Vertical | 4 - Horizontal |
| New Injectors | 2 - Vertical | 2 - Vertical | 2 - Vertical | 2 - Vertical |
| Conversions to Inj | 5 | 5 | 5 | 5 |
| Total Investment | $11,600,000 | $15,100,000 | $8,300,000 | $10,300,000 |
| Incremental Oil (Mbbl) | 645 | 469 | 850 | 755 |
| Incremental NGL (Mbbl) | 738 | 612 | 1015 | 1039 |
| Incremental Gas (MMcf) | 3794 | 3072 | 5288 | 5321 |
| Incremental BOE (MBOE) | 2016 | 1594 | 2747 | 2681 |
| Economic Results (see note at bottom) | | | | |
| Internal Rate of Return (%) | 16 | 18 | 17 | 24 |
| Net Present Value @ 10% | $2,489,000 | $2,800,000 | $3,029,000 | $4,932,000 |
| Development Cost ($/BOE) | 5.75 | 9.48 | 3.02 | 3.84 |
| Payout (years) | 6.0 | 5.4 | 6.2 | 4.6 |
| Project Life (years) | 27 | 25 | 29 | 28 |

Economics based on flat pricing: $20/bbl oil, $15/bbl NGL, and $2.50/mcf gas; and non-escalating operating costs.

## Finalize Pilot Project Development Plan

As discussed above, it was concluded that new producing wells in the pilot development plan should be drilled as horizontal wells if they can be cost-effectively drilled, and new injection wells are currently planned to be drilled as vertical wells. Finalizing the pilot development plan involved selecting the optimum configuration of new wells and conversions to maximize the potential benefit of the project at a cost close to the Budget Period 2 budget of just under $7,000,000. Approximate costs of various capital projects are as follows:

| | |
|---|---|
| New horizontal wells | $1,636,000. each |
| New vertical wells | 1,048,000. each |
| Conversions to Injection | 95,000. each |
| Plant injection capacity expansion | 343,000. (for assumed size of expansion) |
| Plant processing capacity expansion | 670,000. (for assumed size of expansion) |

In addition to these costs, there would be costs in Budget Period 2 for additional modeling, initiating monitoring of the pilot project, technology transfer activities, project review, and reporting. Added together, these aspects of the project are expected to cost about $200,000, leaving about $6,800,000 for the above projects.

The final field implementation plan is shown in Figure 9. It includes three new horizontal producing wells (total cost $4,908,000), one new vertical injection well ($1,048,000), five conversions of producers to injection ($475,000), and the expansion of plant injection capacity ($343,000). The total cost of these projects is expect to be just under $6,800,000.

The three planned horizontal producing wells are 65-2H (subsequently renamed 64-3H because of the surface location), 45-3H, and 44-3H. These three wells had the highest recoveries in the model forecasts. 44-3H had the highest recovery, but will be drilled last, as its predicted recovery is thought to be the most likely to be overly optimistic, and the recoveries of 65-2H and 45-3H are thought to be understated. The development plan includes drilling 65-2H and 44-3H in 2002 and 44-3H in 2003.

The one planned injection well is 74G-2, southeast of 65-2H. It will support the offtake from 65-2H. Drilling is planned for 2003. As discussed previously, additional modeling work will include evaluating whether this well should be drilled horizontally.

Five producer-to-injector conversions are planned, four in 2002 and one in 2003. Wells 57-1, 59-1, 65-1, and either 37-3H or 44-1 will be converted in 2002, and well 61-1 will be converted in 2003. The conversions of wells 57-1, 59-1, and 61-1 will establish an east-west line of injection through the central part of the pilot area, and help support the offtake of wells 45-2, 45-3H, and 46-2. The conversion of 65-1 will follow the drilling of 65-2H, support that well's offtake, and establish another east-west line of injection in the southeastern end of the pilot area. Additional injection is needed in the northwestern end of the pilot area with the drilling of 37-3H, but the best candidate for injection has not yet been determined. Additional work is needed to determine how to maximize recovery in this area.

The expansion of plant injection capacity will be needed in 2002 due to the planned producer-to-injector conversions. The injection system is currently operating at capacity.

The expansion of plant processing capacity is expected to be needed eventually, but the timing of when it will be justified is not yet clear. With the planned producer-to-injector conversions, between 2.5 and 4.0 MMcfd (depending on whether 37-3H or 44-1 is converted) of gas production will be removed. The timing of the need for additional processing will depend on the gas rates from the new horizontal producing wells. If the processing expansion is justified in 2002 or 2003, it will likely be added to the project.

*Task 1.1.7 – Design Upgrades & Additions to Facilities*

Figure 10 shows a very simplified flow diagram of the Nitrogen Management Facility (NMF, or "plant"). The NMF has three primary functions: 1) process and separate produced gas into NGLs for sales, methane residue for sales/power exchange, and nitrogen for re-injection, 2) manufacture nitrogen from air for injection, and 3) compress nitrogen for injection. The addition of numerous horizontal producing wells and new and converted injection wells will increase total injection well capacity and, eventually, the amount of gas to be processed at the NMF.

The demand for additional injection capacity at the NMF will occur first, with the planned producer-to-injector conversions. The added injectors are expected to increase injection demand by about 2 - 3 MMcfd after the wells level off. There are two aspects to increasing injection capacity at the plant: adding injectant (nitrogen) supply and adding compression. Nitrogen supply is available with the existing cryogenic air separation unit (CASU or ASU), which is currently operating below capacity. Additional compression will be added to increase injection compression capacity from about 19 MMcfd to about 23 MMcfd.

The existing NMF injection compression system consists of two six-stage compressors operated in parallel (see Figure 10). The first two stages of these compressors boost pure nitrogen from the ASU from about 35 psi to about 270 – 300 psi. Nitrogen from the Nitrogen Recovery Unit (NRU) is blended with nitrogen from the ASU between the second and third stages of compression. The final four stages of the injection compressors boost the ASU/NRU blended nitrogen from 270 – 300 psi to the injection pressure of 5000 psi.

The expansion of plant injection compression capacity will be achieved by adding a four-stage compressor in parallel with the final four stages of the injection compressors. This is shown in Figure 11.

Eventually, expanding the gas processing capacity of the NMF will be economically justified. Wells producing approximately 3.5 MMcfd of gas are currently shut-in due to plant limitations. These wells all have high GORs, with the gas having a very high nitrogen content (80% - 95%) and therefore relatively low NGL and methane residue yields. As producing wells are converted to injection service, it may be possible to re-open some of these wells. This will depend on the gas rates produced from the new horizontal producing wells, and the composition of that new produced gas. At some point, as additional pilot wells are drilled and the flood progresses, it is expected that there will be enough shut-in production to justify expanding the processing capacity of the NMF.

There are three basic options for expanding processing capacity, each with different costs and benefits. The simplest and least expensive option is to add a second processing system with compression only, extracting no hydrocarbon products from the produced

gas. The only revenue associated with this option would be the oil produced from wells that could be brought on production. A step up from this system, both in cost and benefit, would be to add a second processing system with refrigeration for NGL extraction but no methane residue recovery. In this system, methane would be returned to injection with the nitrogen. The third option is to add processing similar to the existing system, with refrigeration for extracting NGLs and methane residue and returning nitrogen for re-injection. This would have the highest cost and the yield the highest product value.

Current plans are to add a second processing system with compression and refrigeration for NGL extraction but no methane recovery. This can be implemented within the existing electrical system, whereas adding enough compression and refrigeration to also recover methane would require a significant electrical grid expansion, dramatically increasing the cost. The planned system would be implemented for the purpose of processing high nitrogen-content gas, as this is the nature of the gas production that is shut-in when the plant is operating at capacity. This "High N2 System" would therefore require some piping modifications in the field so that wells producing high-nitrogen content gas could be produced into the system.

The current gas gathering system in the field includes a main gathering line from the northwest. As shown in Figure 12, gas from all of the wells in the northern part of the field comes into the NMF via this northwest gathering line. Most of the wells in the northern area of the field produce gas with a nitrogen content over 70%, with many in excess of 80%. One of these wells, 34-2, is about one-half mile from the NMF. By adding a line from well 34-2 to the NMF, an entire group of wells (5-1, 6-1, 7-1, 9-1, 10-1, 13-3, 23-1, 24-2, 25-1, 27-1, and 34-2) can be brought into the plant as a separate inlet stream. Total current production for this group of wells, including those that are now shut-in, is about 6 MMcfd, with an average nitrogen content of about 80%.

Installation of the High N2 System at the current time would add an estimated 50 bopd and 45-50 bpd of NGLs. Total production from the group of northern wells which would be processed in the High N2 System is about 90 bopd and 6 MMcfd of total gas, with a content of about 260 bpd of NGLs. Within this group, wells producing approximately 30 bopd and 3 MMcfd gas containing about 110 bpd of NGLs are currently shut-in, while wells producing 60 bopd and 3 MMcfd gas containing 150 bpd of NGLs are on production. Fieldwide, there is additional shut-in production of about 20 bopd and 1 MMcfd gas containing about 40 bpd of NGLs.

Wells currently on production and moved into the High N2 System will suffer a loss in NGL recovery, because the planned system is expected to recover only 40% - 60% of the NGLs – compared to 70% - 80% with the existing processing system. It is therefore estimated that installation of the planned system at current rates would result in the following:

| | Oil | NGLs |
|---|---|---|
| Add production from SI northern wells: | + 30 bpd | + 55 bpd (50% of 110) |
| Add production from SI other wells: | + 20 bpd | + 30 bpd (75% of 40) |
| Lost production from online northern wells: | | - 38 bpd (-25% of 150) |
| Net Effect | + 50 bopd | + 47 bpd |

The benefits of the High N2 System will be reduced with the planned producer-to-injector conversions, but increased by additional gas production from the new horizontal producing wells. Installation of the High N2 System will not be justified until the magnitudes of these offsetting impacts are better known.

Within the planned High N2 System, two options are currently being considered. The first option includes adding a single stage inlet compressor and new gas treating equipment to remove carbon dioxide and water vapor and extract NGLs. The second option utilizes a larger two-stage inlet compressor and existing but idle gas treating equipment. The second option results in higher fuel usage compared to the first option, but would require slightly less initial investment, have slightly better NGL recovery, and have better gas treatment. There are variations within each option. Final determination will depend on the expected incremental production to be gained, timing, and equipment availability.

## Conclusion

The tasks associated with Budget Period 1 of the East Binger Unit have been completed. Significant improvement in the understanding of flow behavior in the field has been gained through the gathering and interpretation of pressure transient data, injection and production flow profile data, gas analyses, and horizontal well performance data. Prior assumptions regarding factors affecting fluid movement in the field have been found to be incorrect. Reservoir simulation modeling efforts could have been enhanced had this data and analyses been conducted prior to the construction of the simulation model, but the modeling efforts and history matching work contributed to the improved understanding.

Alternative development scenarios for the pilot project to be implemented in Budget Period 2 have been defined and evaluated, and facility expansion requirements and options have been assessed. A plan of development for the pilot project has been completed. The plan includes drilling three new horizontal producing wells and one new injection well, converting five producers to injection service, and expanding injection capacity for the field. Through this work, Binger Operations hopes to demonstrate the benefits of horizontal wells in reducing gas cycling and improving volumetric sweep efficiency in the nitrogen flood of the East Binger Unit.

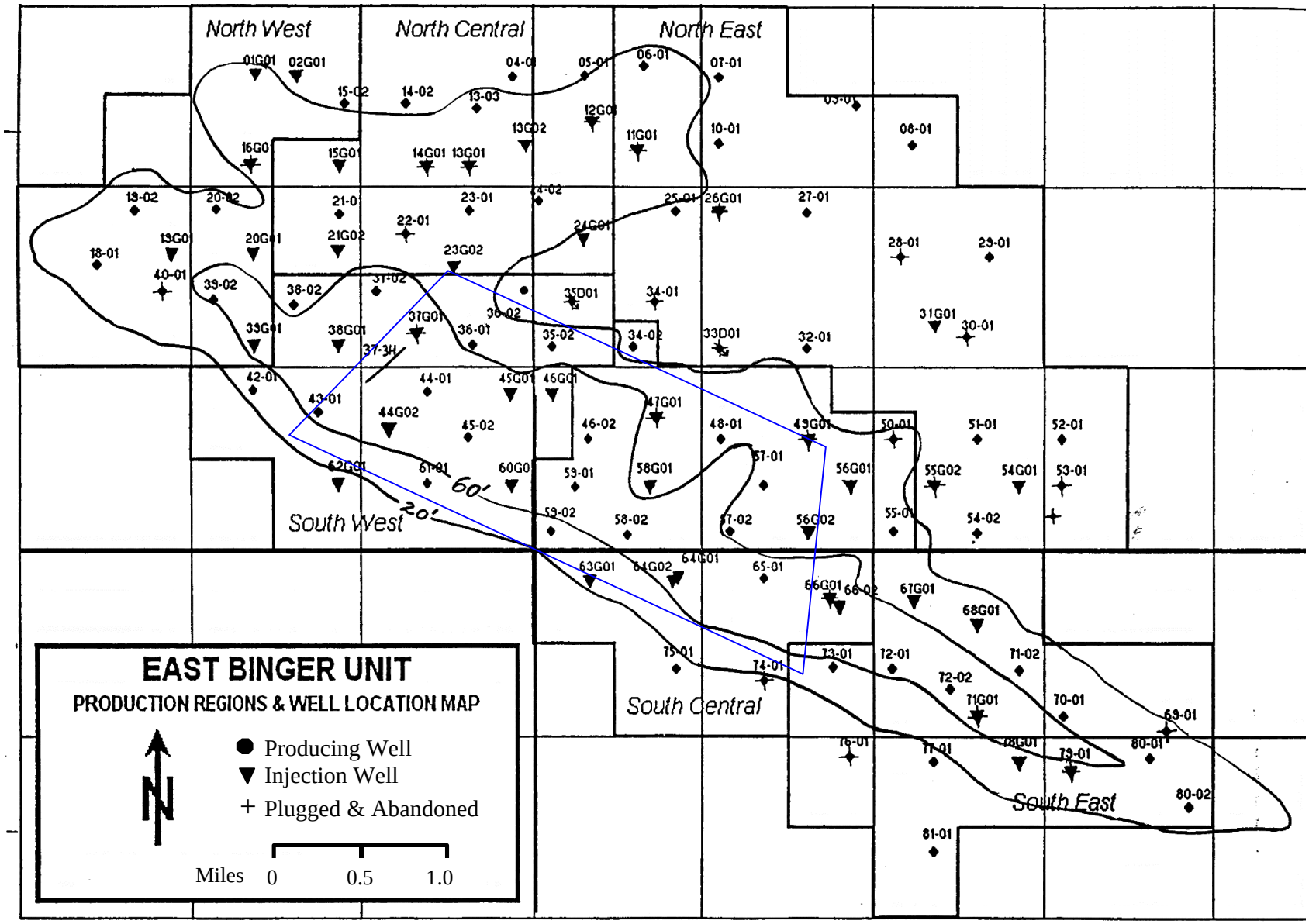


**Figure 1. East Binger Unit net pay map. The blue box surrounds the pilot area.**

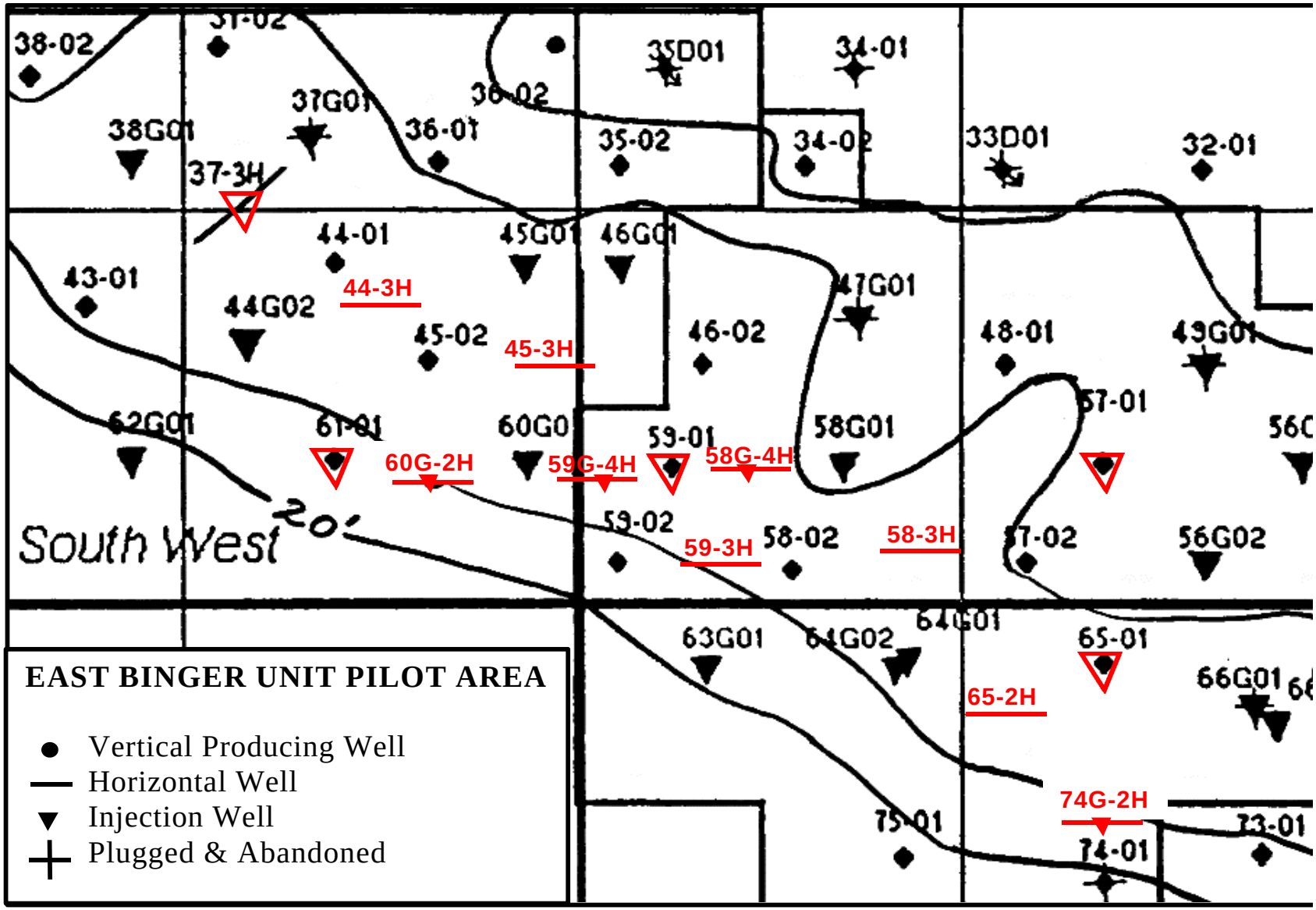


**Figure 2. Pilot model forecast Scenario 1 – horizontal injectors and horizontal producers in a pattern flood.**

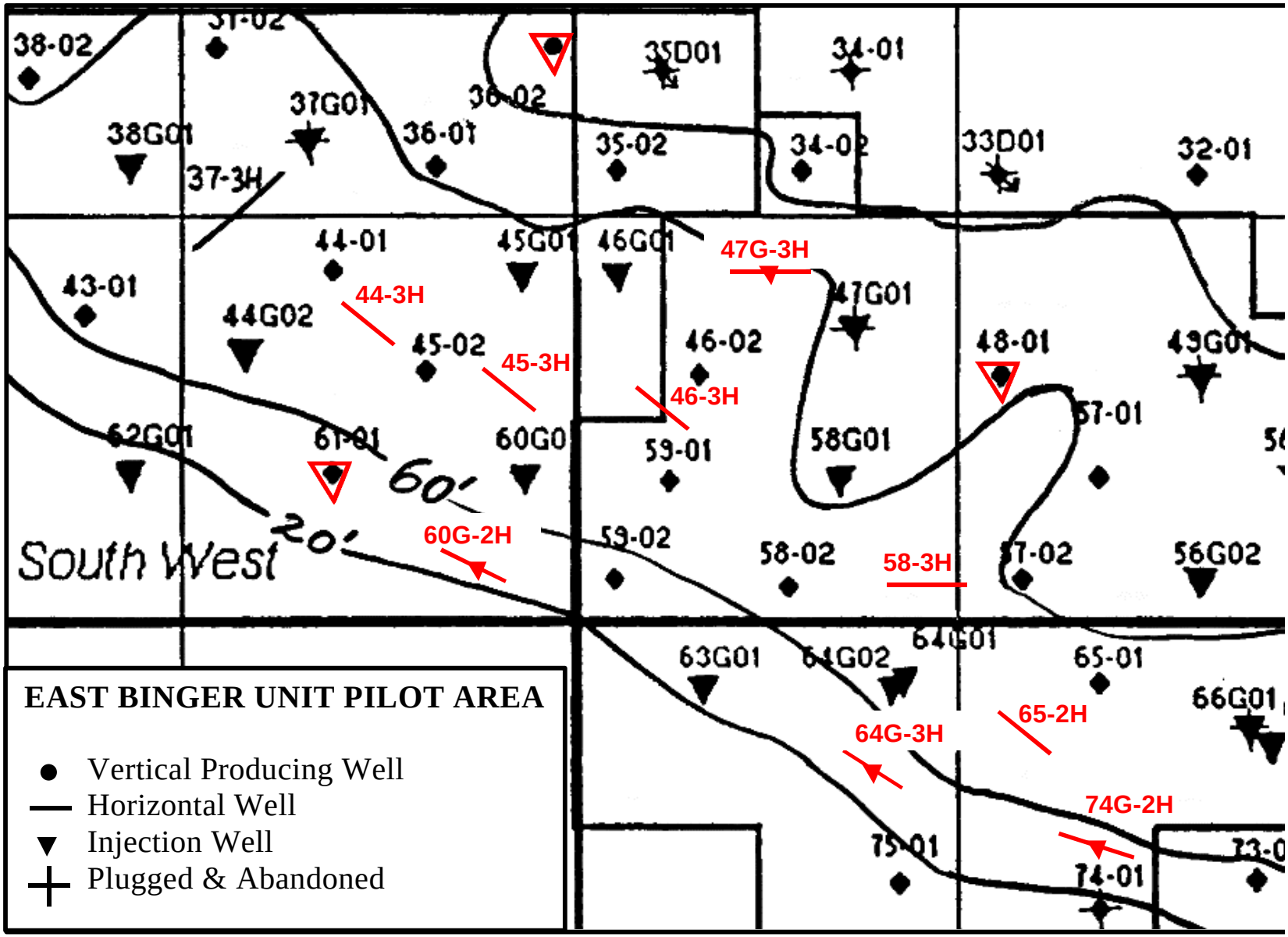


**Figure 3. Pilot model forecast Scenario 2 – horizontal injectors and horizontal producers in a peripheral flood.**

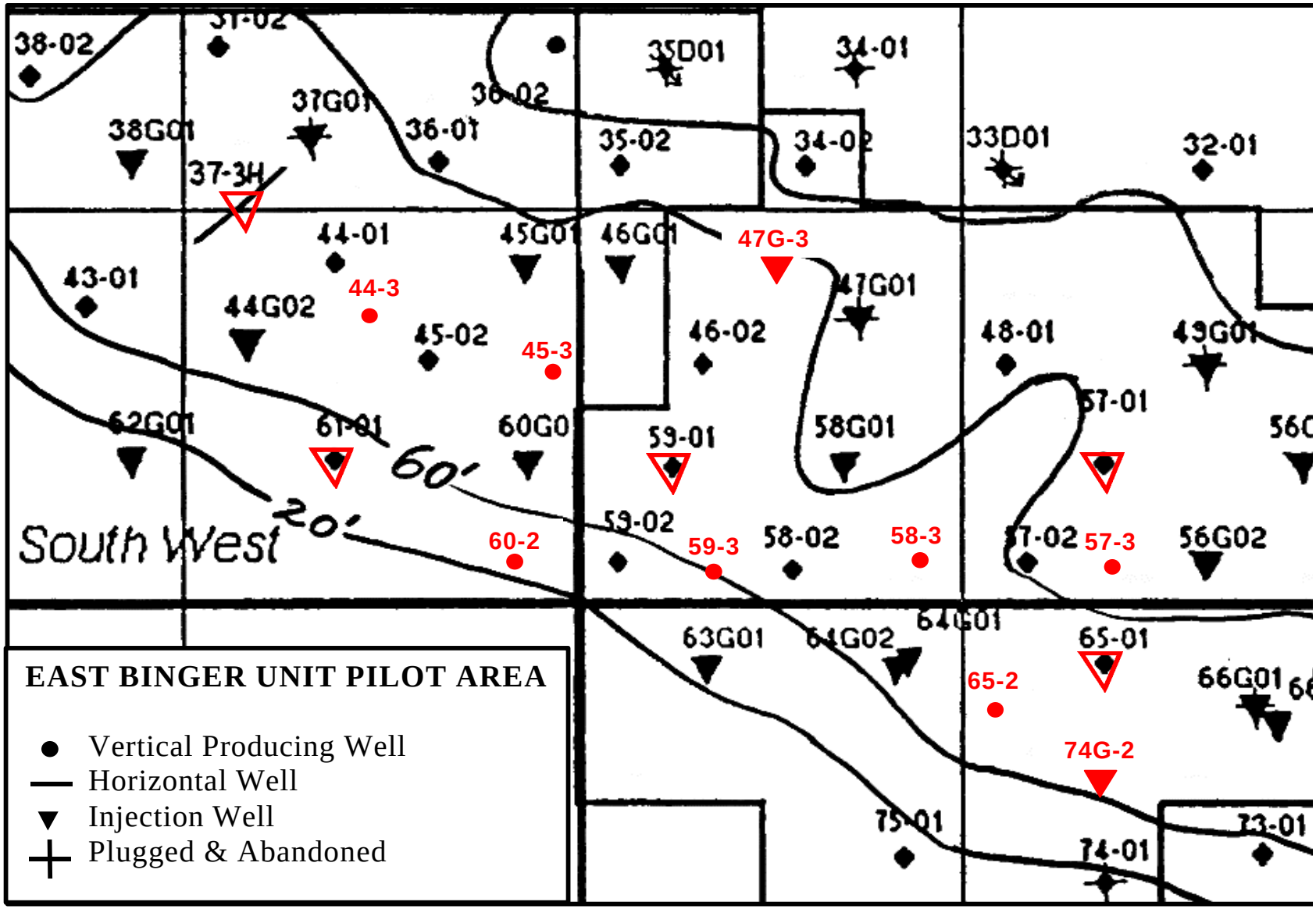


**Figure 4. Pilot model forecast Scenario 3 – vertical injectors and vertical producers in a pattern flood.**

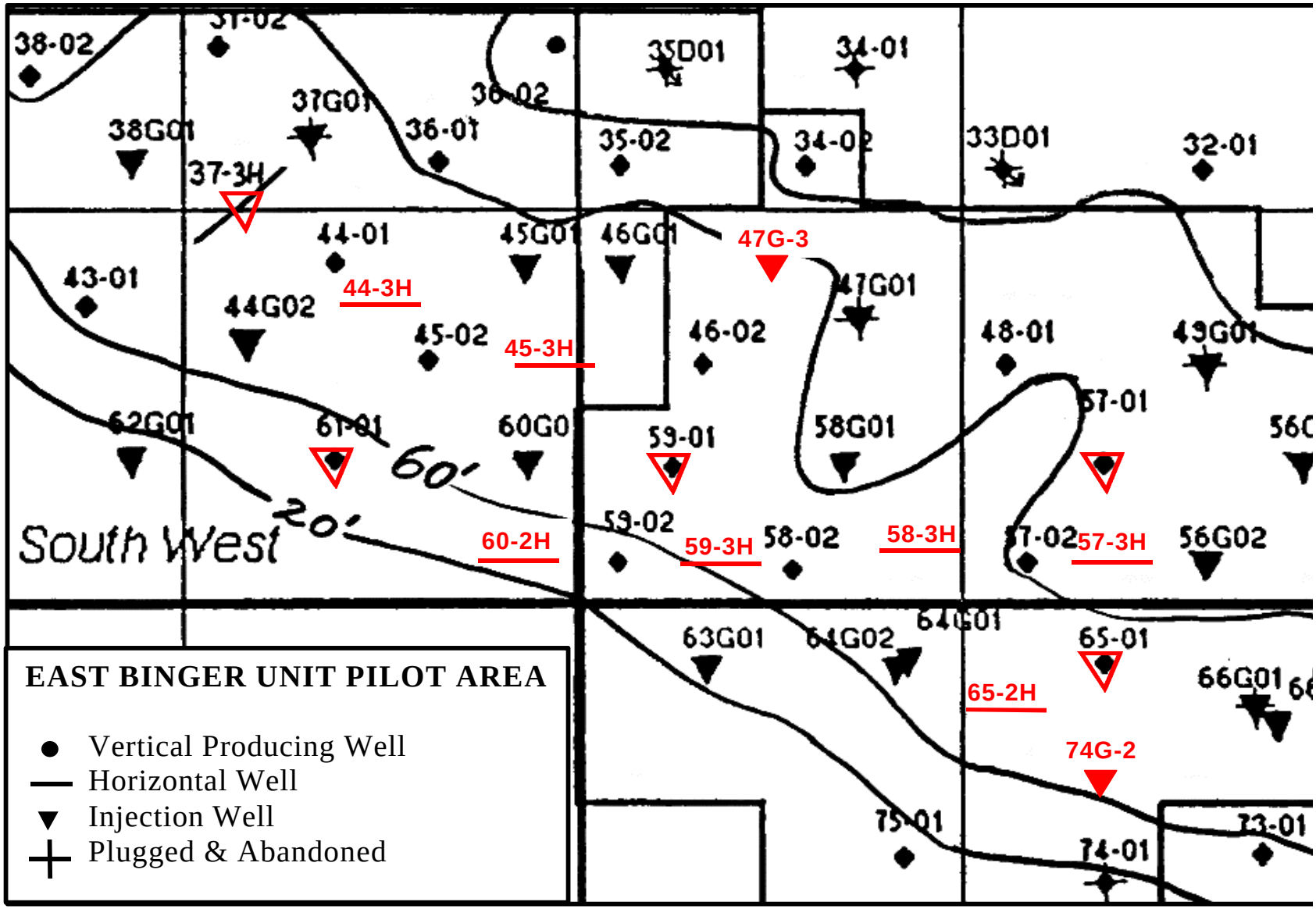


**Figure 5. Pilot model forecast Scenario 4 – vertical injectors and horizontal producers in a pattern flood.**

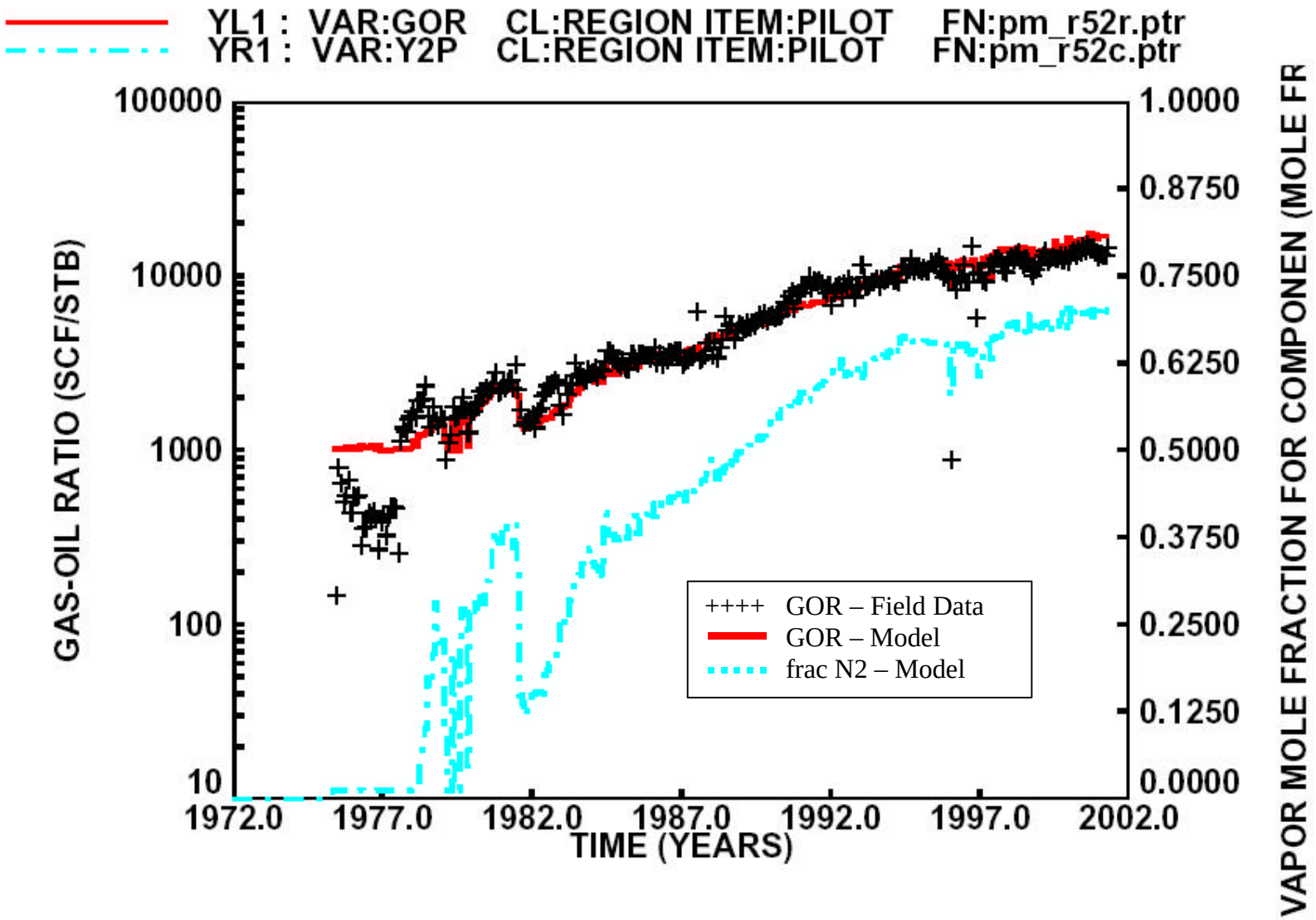


**Figure 6. Pilot model history match of GOR for the entire pilot area.**

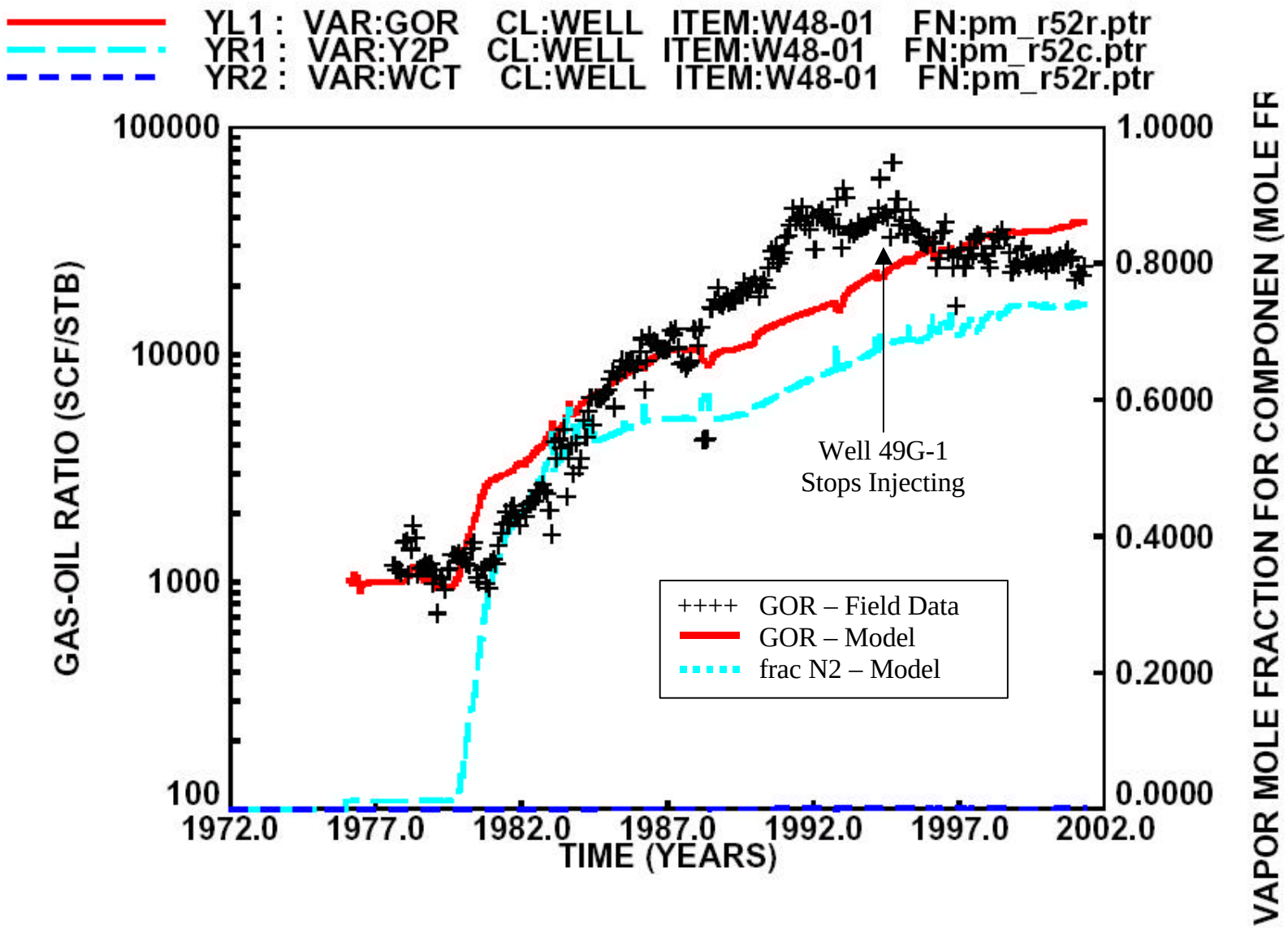


**Figure 7. Pilot model history match of GOR for well 48-1. Note when well 49G-1 stopped injecting.**

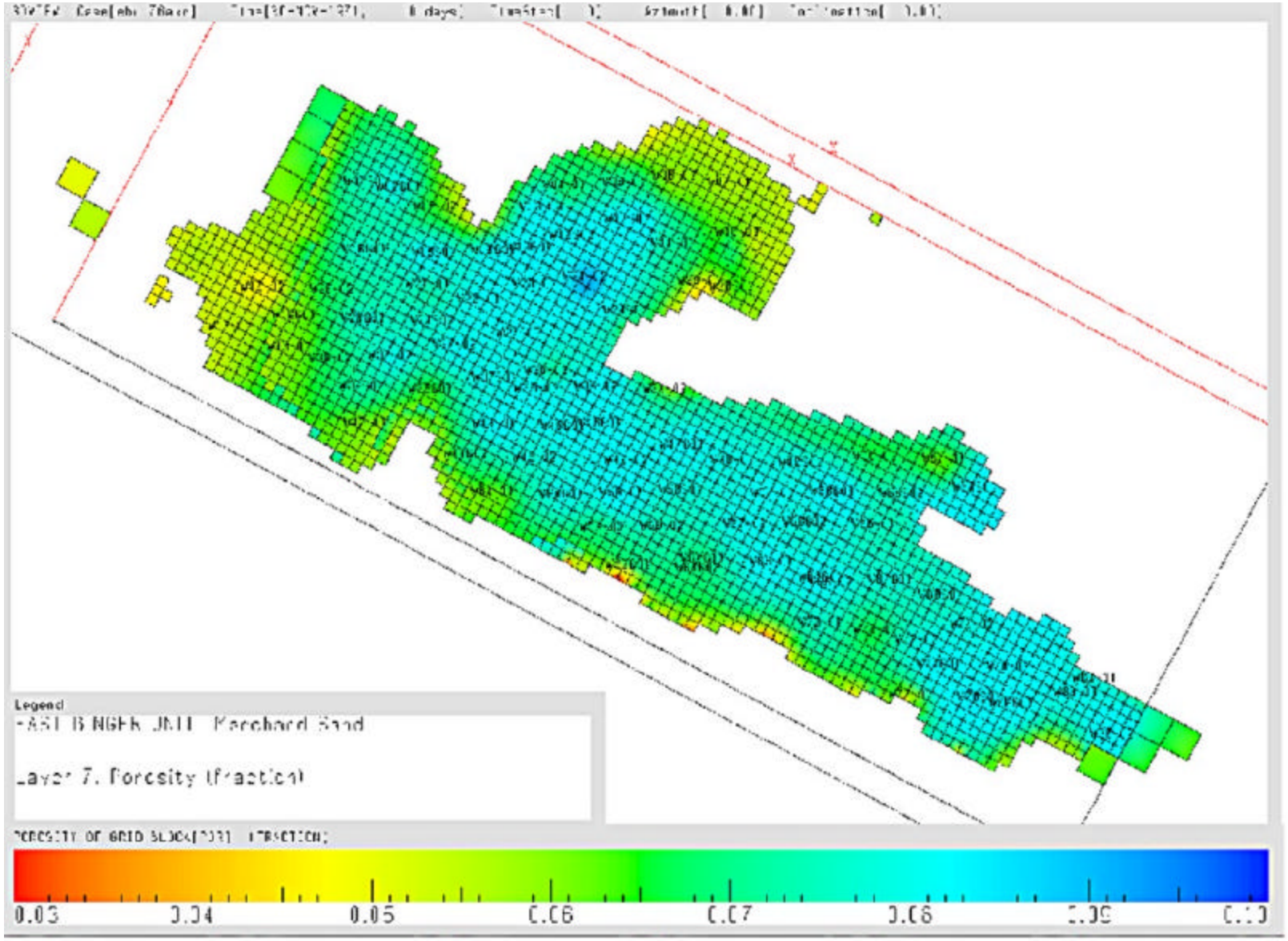


**Figure 8. Model layer 7 porosity map, indicating the orientation of the grid on the field.**

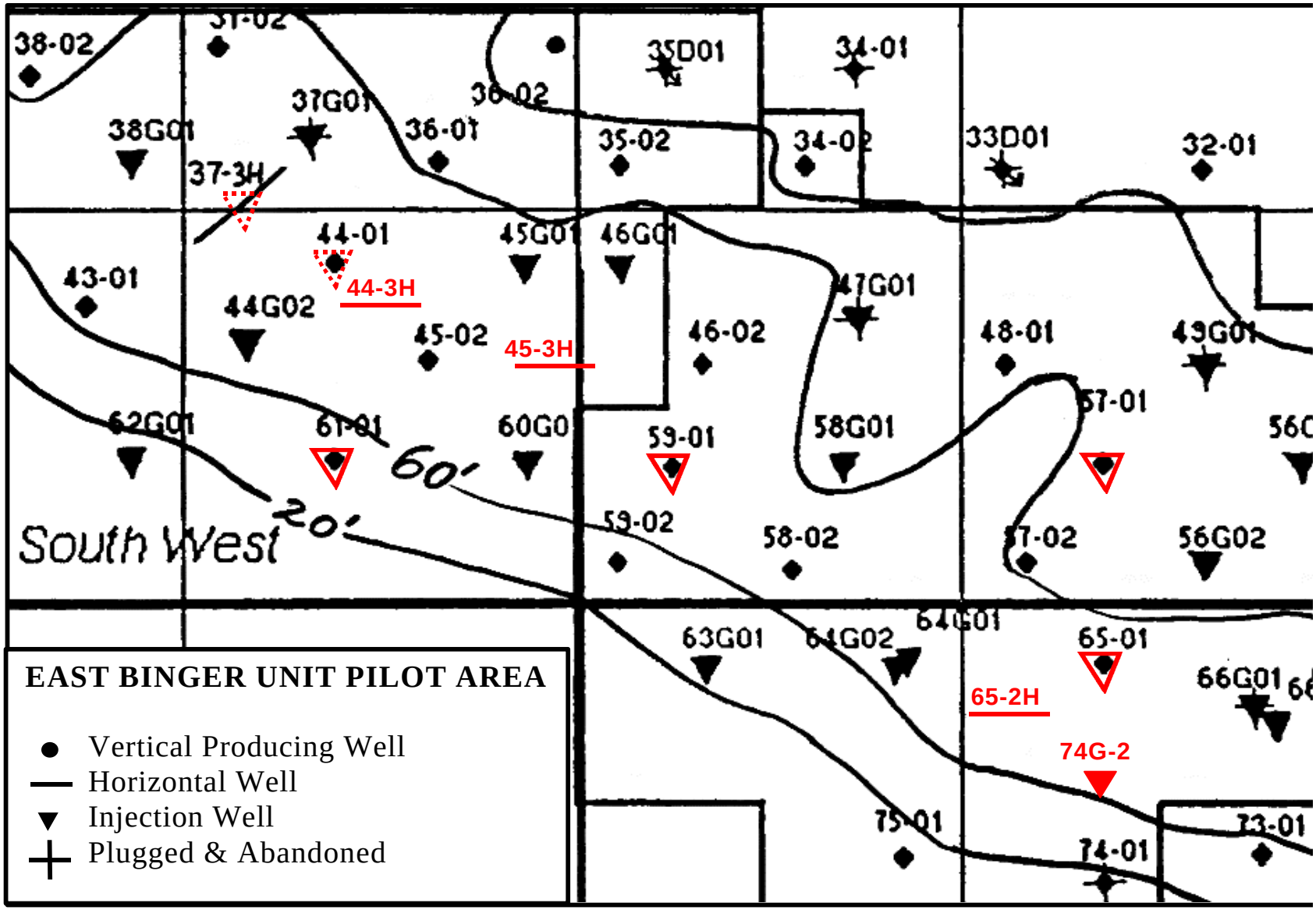


**Figure 9. Fieldwork planned for the pilot - shown in red. Either 37-3H or 44-1 will be converted to injection.**

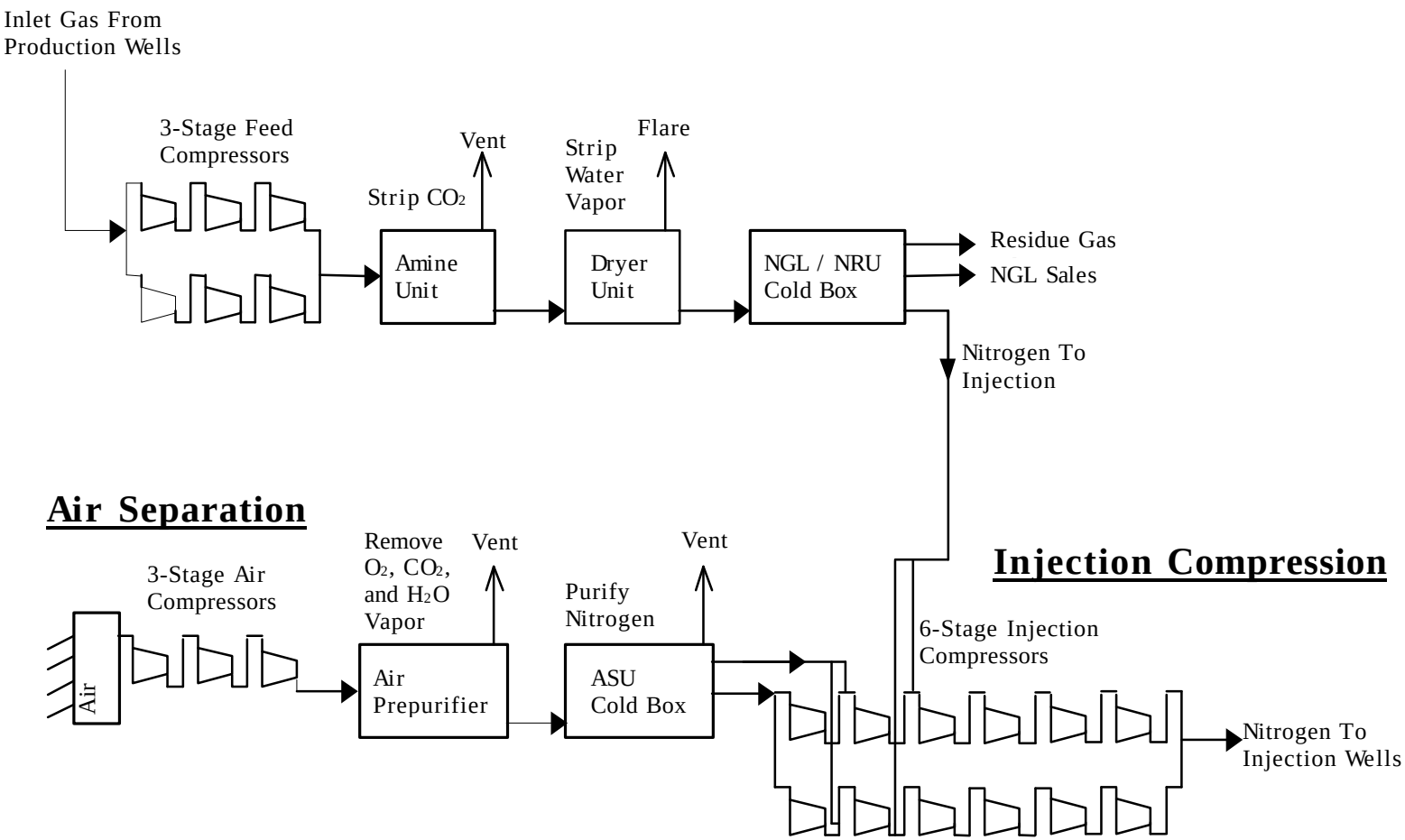


**Figure 10. Simplified Nitrogen Management Facility (NMF) process diagram as it exists today.**

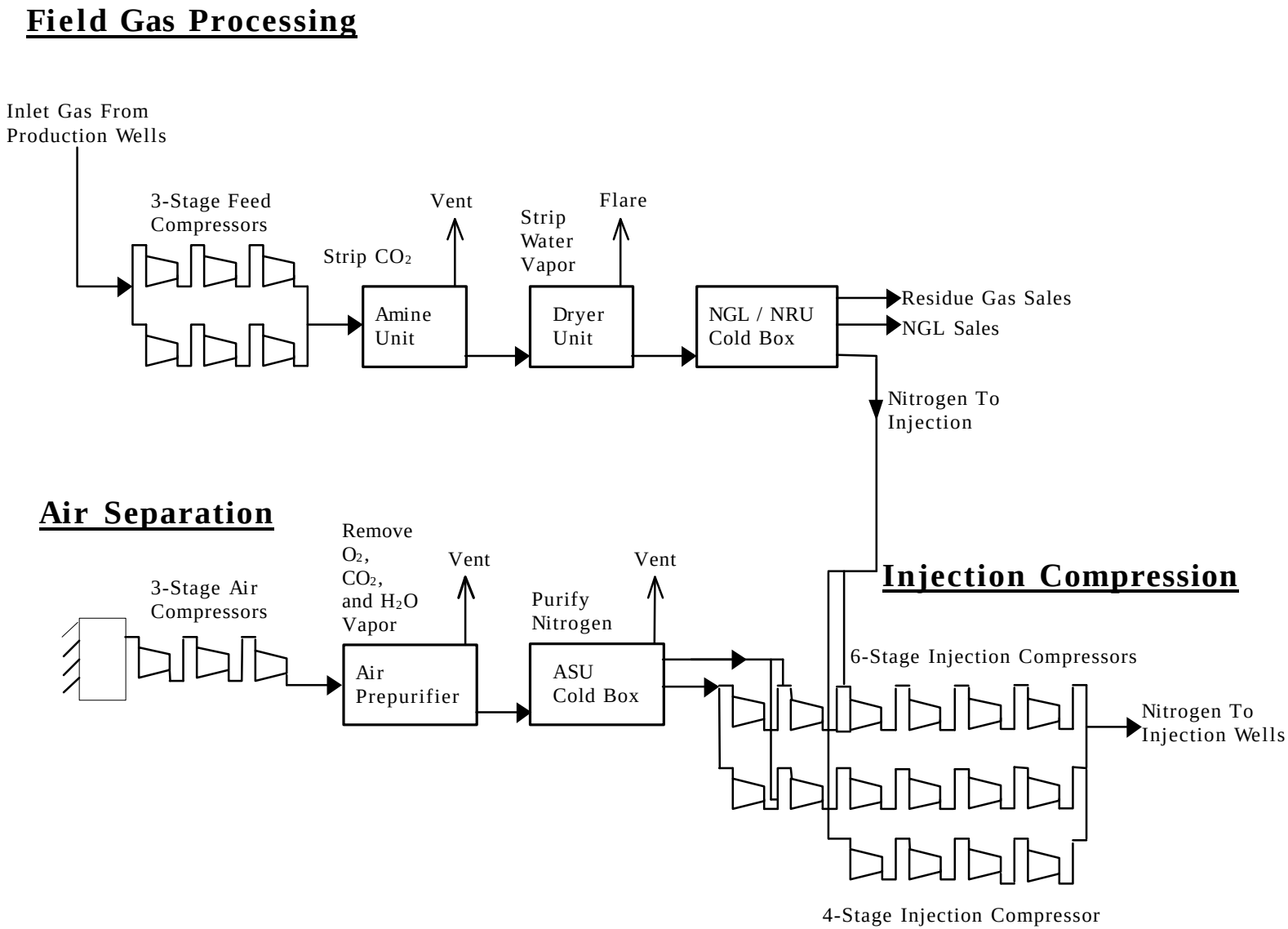


**Figure 11. Simplified NMF process diagram with planned injection compression expansion.**

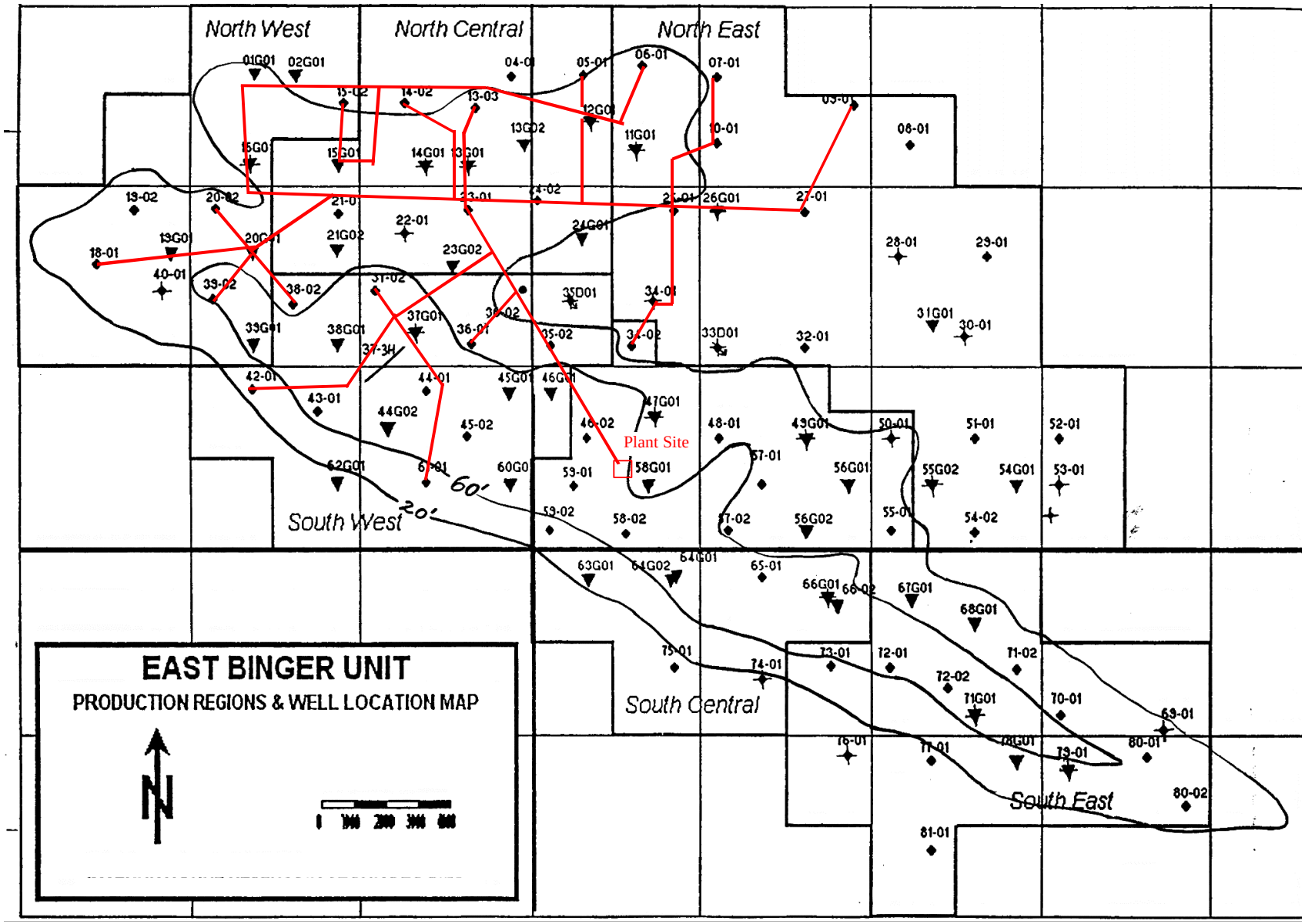


**Figure 12. Produced gas gathering system for the northern and western portions of the East Binger Unit.**