FOSSIL ENERGY

DOE/BC/14990-23
(OSTI ID: 784113)

APPLICATION OF RESERVOIR CHARACTERIZATION AND ADVANCED TECHNOLOGY TO IMPROVE RECOVERY AND ECONOMICS IN A LOWER QUALITY SHALLOW SHELF CARBONATE RESERVOIR

Annual Report
August 3, 1997-August 2, 1998

By:
T. Scott Hickman
James J. Justice
Rebecca Egg

Date Published: August 2001

Work Performed Under Contract No. DE-FC22-94BC14990

Oxy USA, Inc.
Midland, Texas

National Energy Technology Laboratory
National Petroleum Technology Office
U.S. DEPARTMENT OF ENERGY
Tulsa, Oklahoma

DISCLAIMER

This report was prepared as an account of work sponsored by an agency of the United States Government. Neither the United States Government nor any agency thereof, nor any of their employees, makes any warranty, expressed or implied, or assumes any legal liability or responsibility for the accuracy, completeness, or usefulness of any information, apparatus, product, or process disclosed, or represents that its use would not infringe privately owned rights. Reference herein to any specific commercial product, process, or service by trade name, trademark, manufacturer, or otherwise does not necessarily constitute or imply its endorsement, recommendation, or favoring by the United States Government or any agency thereof. The views and opinions of authors expressed herein do not necessarily state or reflect those of the United States Government.

This report has been reproduced directly from the best available copy.

DOE/BC/14990-23
Distribution Category UC-122

Application of Reservoir Characterization and Advanced Technology to Improve Recovery and Economics in a Lower Quality Shallow Shelf Carbonate Reservoir

By
T. Scott Hickman
James J. Justice
Rebecca Egg

August 2001

Work Performed Under DE-FC22-94BC14990

Prepared for
U.S. Department of Energy
Assistant Secretary for Fossil Energy

Gary Walker, Project Manager
National Petroleum Technology Office
P.O. Box 3628
Tulsa, OK 74101

Prepared by
Oxy USA, Inc.
P.O. Box 50250
Midland, TX 79710-0250

T. Scott Hickman & Associates, Inc.
505 N. Big Spring, Ste 105
Midland, TX 79701

Advanced Reservoir Technologies
P.O. Box 985
Addison, TX 75001-0985

TABLE OF CONTENTS

List of Figures v
Abstract vii
Executive Summary ix
Introduction to DOE-Funded Project 1
Section 1: Project Overview 5
- Geological Setting 5
- Petrophysics 5
- Reservoir Description 6
- Development History 7

Section 2: Completed Tasks 9
- CO_2 Stimulation Treatments 9
- Fracture Treatments 11
- 3-D Seismic Evaluation 15
- Reservoir Modeling 16

Section 3: Ongoing Tasks 19
- Cross-Well Seismic Program 19
- Area Preparation & Construction 22
- Field Operations 22
- Technology Transfer 23

References 25
Figures 27-33
Table 35

List of Figures and Table

Figure 1 - DOE Project Area Location Map.

Figure 2 - Map Showing Location of Inter-well Reflection Lines.

Figure 3 - Portion of the cross well reflection survey line 1 from well #7916 to well #3206.

Figure 4 - Portion of the cross well reflection survey line from well #4852 to well #4809.

Figure 5 - Shear wave travel times (DTSU) versus compression wave travel times (DTCU) for the total cross well seismic data set.

Figure 6 - Rock types from cross well seismic for the south line from the source well #4852 (right) to well 4828 (left).

Figure 7 - Cross plot of the south line cross well compression (DTCU) and shear (DTSU) wave travel times.

Figure 8 - Model injection rates vs. actual injection rates.

Table 1 - CO_2 injection rate.

ABSTRACT

The Oxy operated Class 2 Project at West Welch Project is designed to demonstrate how the use of advanced technology can improve the economics of miscible CO_2 injection projects in lower quality Shallow Shelf Carbonate reservoirs. The research and design phase (Budget Period 1) primarily involved advanced reservoir characterization. The current demonstration phase (Budget Period 2) is the implementation of the reservoir management plan for an optimum miscible CO_2 flood design based on the reservoir characterization. Although Budget Period 1 for the Project officially ended 12/31/96, reservoir characterization and simulation work continued during the Budget Period 2.

During the fourth annual reporting period covered by this report, work continued on the reprocessing and interpretation of the cross well seismic data and on the improvement of the model's history match. Final analysis of the five CO2 stimulation treatments was completed with three of the treatments judged a success. Most of the well work and facility construction was completed in the project area and CO_2 injection was initiated in October 1997. Problems with wellbore integrity and reservoir quality along with anomalous flood response led the operator to modify the operating plan as the flood progressed. The first CO_2 breakthrough occurred in July 1998 and as of August 1998, no oil response has been measured.

EXECUTIVE SUMMARY

The West Welch Unit is one of the four large waterflood units in the Welch Field located in the northwestern portion of Dawson County, Texas. The Welch Field was discovered in the early 1940's, the oil production is from the San Andres formation at approximately 4800 feet. The primary production mechanism is solution gas drive. The field has been under waterflood for 35 years and mostly infill drilled on 20-acre spacing. A CO_2 Injection Pilot on the offsetting South Welch Unit done during 1982-86, provided encouraging results. The availability of CO_2 from a new pipeline near the field, allowed a phased development of a miscible CO_2 injection project in the South Welch Unit.

The reservoir quality is poorer in the West Welch Unit, due to relatively shallow sea level during deposition. Because of the close proximity to a CO_2 source and the CO_2 operational experience gained in the South Welch Unit, the West Welch is ideally located for demonstrating methods that can enhance economics of Improved Oil Recovery for Lower Quality Shallow Shelf Carbonate Reservoirs.

The West Welch DOE Class 2 Project is divided into Budget Period 1 and 2. Budget Period 1, which ended 12/31/96, involved a detailed reservoir characterization effort based primarily on advanced petrophysics. The resulting "geologic" model was used to design a CO_2 flood. An economic analysis, based on the model predictions, resulted in the project's continuation into Budget Period 2, which comprises the completion of project installations and field demonstration of the project.

Much of the reservoir characterization effort was carried over into Budget Period 2. A methodology had been developed to extract porosity estimates from the 3-D seismic data set. The seismic-derived porosity was used to constrain the interwell estimates of porosity from the geologic model. This "seismic-enhanced" model gave better total-fluid history match over the geologic model. Other changes to the model included altering the mix of rock types and the relative permeability relationships for specific rock types for an improved water-oil ratio match. This enhanced model was used as the basis for the final optimization of the CO_2 flood. This work was completed by the start of the fourth annual reporting period (8/4/97 - 8/3/98).

The bulk of the reservoir characterization work during the fourth annual reporting period involved the reprocessing and interpretation of the cross well seismic data. The high frequency (600-700Hz) at which the data is recorded offers an opportunity for a much finer vertical resolution and therefore more detailed interwell characterization than has ever been possible. Still, the conditions under which the cross well seismic surveys are conducted create serious challenges in the acquisition, processing and interpretation of the data. A number of obstacles had to be overcome before any useful interpretations of the reflection data could be obtained. Work has also started in developing methods to identify rock types using the relationship between shear and compressional wave velocities from the cross well seismic data.

During this reporting period, much of the work associated with the wells, surface facilities for distributing CO_2 for injection and gathering produced CO_2, was completed. Per optimization plan, water injection rates were reduced in the project area to reduce the injection pressure below the formation parting pressure. This resulted in significant drop in the oil-producing rate.

The project was scaled down due to several factors such as, reservoir quality, wellbore integrity and associated cost and anomalous performance. Despite such scale down the number of injectors in the project have been maintained at an adequate level to test the accuracy of seismic enhanced model. At the end of the fourth annual reporting period and after nine months of CO_2 injection, low-volume CO_2 breakthrough has been seen in one producer without any oil response, and no injector has yet been WAG'd. The actual performance is being closely monitored for comparison with the model's forecast.

INTRODUCTION TO THE DOE-FUNDED PROJECT

In response to the DOE's 1992 solicitation for Class 2 Shallow Shelf Carbonates (SSC) Reservoir demonstration projects, OXY USA Inc. in Midland, Texas submitted a proposal titled "Application of Reservoir Characterization and Advanced Technology Improves Economics in a Lower Quality Shallow Shelf San Andres Reservoir." The proposal was aimed at proving lower quality San Andres reservoirs can be economically CO_2 flooded by applying advanced reservoir characterization and a combination of EOR methods that are not widely utilized. The reservoir characterization efforts would demonstrate new technologies, using 3-D and cross well seismic methods. The proposal generally focused on using commercially available resources. The EOR methods involved both miscible CO_2 flooding and cyclic CO_2 stimulation.

Because of the large area that West Welch Unit covers, it contains reservoir of varying quality and connectivity. The West Welch is therefore a good representative of lower quality shallow shelf carbonate reservoirs. Several factors favored the selection of West Welch Unit as a test site. As an operator of both South Welch Unit and West Welch Unit, OXY had a large working database for the field which included the logs from 770 wells, core data from 147 wells, and a 3-D seismic survey. In addition, several PVT fluid analyses were also available. The infrastructure for CO_2 supply and gas processing plant was available at the adjacent South Welch Unit. Due to ongoing CO_2 flood in South Welch, OXY personnel were experienced in the modeling and field implementation of CO_2 flooding.

The proposed project was to have used six technologies to enhance the probability of success for the CO_2 flood. These technologies included detection of directional fracture propagation with passive seismic measurements, using the fracture stimulation of injectors to enhance sweep and thus eliminate the need for drilling of infill injectors, using cross-well seismic data to refine the interwell geologic model and to monitor the CO_2 flood front, integrating the 3-D seismic and the cross well seismic interpretations to enhance the reservoir characterization, using an enhanced compositional reservoir simulator to improve the prediction of CO_2 flood response, and investigate the use of mobility control agents with CO_2 injection to improve vertical sweep. The investigation of the first five technologies is either complete or well underway.

The DOE selected the OXY proposal as one of the successful candidates for a mid-term Class 2 project. A contract was finalized during 1994, which provided for a 50-50 cost sharing arrangement of the $22.2 MM estimated budget. The project officially started August 3, 1994 and was divided into 2 phases. Budget Period 1 was the design phase in which advanced reservoir characterization was used to build a geologic model for use in a reservoir simulator. This characterization included detailed petrophysical analysis leading to the identification of rock type from log response. This methodology permitted detailed estimates of permeability and saturation's from log data. The MORE Compositional Simulator was used to optimize the miscible CO_2 flood design and maximize the economics. Based on a favorable economic analysis, it was recommended that the project be continued into the demonstration phase in Budget Period 2, which officially began on January 1, 1997.

To further support the reservoir characterization effort In Budget Period 1, a pre-existing 3-D seismic data set was reprocessed and interpreted for the San Andres horizon. This reprocessing ultimately yielded a vertical resolution of 50'. This enhanced resolution enabled the geophysicist to describe the reservoir in 2 layers. Furthermore, by relating the seismic response to sonic log response, the average porosity and thickness for each layer could be estimated. In Budget Period 2, this detailed interpretation of the 3-D seismic data set was used to constrain the porosity-thickness estimate of the grid blocks in the interwell regions. The seismic-constrained geologic model was the basis for the "seismic-enhanced" model that gave improved history match over the Budget Period 1's "geologic" model and the current predictive run for the CO_2 flood.

The updated seismic interpretation indicated that additional oil could be recovered by drilling wells south of the DOE-funded project area. The maps indicated good porosity and pay thickness in that area. Since OXY had earlier success in extending the southward development in the West Welch Unit, the project area was expanded in October 1997 for drilling new wells to test the seismic interpretation. Seven wells were drilled in the fourth annual reporting period in the expanded area. Well logs confirmed the seismic-based estimates of porosity to within one- percent porosity unit and reservoir thickness. The top of the pay section was within the accepted error margin, however, it was 15' lower than predicted. Because of the low structural position, the predicted net pay in these wells was reduced. Most recent estimates indicate that these wells will recover a total of 180,000 bbls of incremental oil. These reserves are insufficient to provide an acceptable rate of return. During this period two pre-existing injectors have also been converted to CO_2 injection in the expansion area and should result in additional tertiary reserves.

Another technology that was investigated in Budget Period 1 was cyclic CO_2 stimulation. This process involves injecting CO_2 into producing wells, allowing a time for soaking, and then producing tertiary oil from the near-producer region. The cyclic CO_2 process can provide an almost immediate production increase, and thus reduce the payout time, compared to a conventional CO_2 flood. CO_2 stimulations were conducted in Budget Period 1 to determine if performance could be predicted accurately using the enhanced compositional simulator or some other method. The results proved to be ambiguous, and the use of cyclic CO_2 stimulation for project enhancement was not pursued into Budget Period 2. The current operating strategy of injecting sour CO_2 at West Welch Unit precludes any further testing of cyclic CO_2 injection because of the safety concerns.

During the Budget Period 1, the use of fracture stimulations to eliminate the need for infill drilling injection wells in a part of the project area was investigated. To test this technology, a foamed frac treatment was pumped in an existing injection well while seismic receivers placed in three offset wells monitored the fracture growth. The interpretation yielded a four dimensional map of fracture growth. This work was completed and reported in Budget Period 1. In Budget Period 2, this stimulated injector was converted to CO_2 injection. Anomalous breakthrough of CO_2 and nitrogen in September 1998 occurred in wells outside the injector's pattern, indicating a lack of control in the fracture growth.

The drilling of the expansion area wells to test the predictive capabilities of the 3-D seismic interpretation offered the operator an opportunity to test a fracture simulation model. Refined by the actual results of seven fracture stimulations, this model predicts that the propped half-length of a fracture is limited to 80 to 100' before the fracture will grow dramatically out-of-zone. This technology was tested in the northwest part of the DOE area, where performance suggests the presence of permeability barriers between injectors and producers. After the fracture stimulation, the injector indicated that communication was successfully extended beyond lateral barriers in the pay interval. Should the CO_2 flood prove successful in better parts of the project area, this technology may be useful in extending the flood to areas of the field with higher degrees of lateral heterogeneities.

Finally, in Budget Period 2, well bores were prepared and facilities were upgraded for CO_2 injection. This injection was initiated in October 1997. Flood monitoring, well injectivity and wellbore issues were the main field demonstration activities in the fourth annual reporting period.

SECTION 1: PROJECT AREA OVERVIEW

GEOLOGIC SETTING

The Welch Field is located in the north part of the Midland Basin and in the northwestern portion of Dawson County, Texas. Production is from the Permian-Age dolomite of the San Andres Formation. The determination of the depositional environment and diagenetic history was established from detailed interpretations of core samples within and surrounding the project area. The cyclic pattern of alternating depositional environments has been documented throughout the Permian Basin. The depositional cycles were put into a sequence stratigraphic framework in order to insure that the correlation of individual reservoir layers remained consistent from well to well. The Bureau of Economic Geology was consulted to bring the Welch San Andres sequences into an established hierarchy.

The San Andres deposits were emplaced on a shallow shelf ramp near the paleoshoreline. Structural relief was very low; probably less than 3' of slope per mile, hence minor fluctuations in sea level moved the shoreline several miles at a time. These depositional environments produced broad bands of sediments with variable textural characteristics depending on the sub-environments associated with each major environment. Tidal flat deposits are produced along the strand line as well as on islands within the lagoon. Higher energy tidal channels are seen dissecting the low energy tidal flats, producing coarse-grained sediments encased in lime muds. Small amounts of grainier rocks can also appear within the lagoonal settings.

The post-depositional history describes the diagenetic events that changed the physical properties of the reservoir rock. From the time of deposition, the sediments have been altered extensively in places to the point that the original fabric of the sediment is no longer recognizable. These processes are sometimes termed random, because the controlling factors are often not known. However, their effect is manifested at Welch in terms of dolomitization, pore-filling anhydrite, leaching and precipitation of quartz and calcite cements, and the presence of stress fields that produce directional trends in permeability.

PETROPHYSICS

A common problem in discerning petrophysical relationships from log and core data is reconciling the differences in data acquisition methodologies through time. As the industry's knowledge of factors affecting the measurements of porosity and permeability has evolved, so have the methods and practices used for their measurements. The extensive data collected in Welch Field is useful for correlation and for pay quality comparisons, but it can not provide simple and direct correlation between porosity and permeability. For a single porosity value the porosity-permeability semi-log cross-plots produced a standard error estimate of several orders of magnitude.

In Sept/Oct 1994 two observation wells, WWU 4852 and WWU 7916, were drilled and cored in the West Welch Unit project area. An extensive suite of logs was run on these wells. The

data from these wells was used to calibrate the logs and cores in the project area and is the basis for the detailed petrophysical data used in various project area models.

The mineralogy of the productive San Andres interval is simple, with dolomite comprising 77%, anhydrite comprising 17%, quartz comprising 4% and gypsum, calcite, and clay minerals each comprising less than 1% of the rock matrix. However, the pore structure is highly complex. David K. Davies and Associates described four different rock types for the section. Comparison of these rock types, to the normally determined features of depositional environment and fabric, found little in the way of correlation. This poor correlation demonstrates the importance of diagenetic processes to flow characteristics at Welch. Any rock type can occur in any depositional facies, and basing reservoir parameters on inferred depositional environments can result in erroneous interpretations.

A methodology was needed that would allow the geologist to recognize rock type from log response. Furthermore, the relationships between log response and the various reservoir parameters needed for complete reservoir characterization had to be derived for each rock type. Relative permeability tests indicated that the reservoir is of mixed wettability. The resulting uneven distribution of fluids in the pore system affected the resistivity log response. The resistivity logs therefore could not be used to identify rock type, and a nonstandard log interpretation approach was needed. The methodology that was developed was published in 1996[1].

RESERVOIR DESCRIPTION

The reservoir interval at West Welch Unit occurs at an average depth of 4800 - 4900', approximately 400' below the top of the formation. The West Welch Unit covers 12,000 acres. The general structure of the field is a monocline, gently dipping to the south-southeast. The present structure is a result of pre-depositional movement of deeper fault blocks. No fault cuts the San Andres at West Welch and the appearance of actual fractures in core is rare. The average gross thickness of the producing interval is 100', net pay thickness of 50'. The porosity in the reservoir interval ranges between 0 and 22%, with an average value of 9% for the entire Unit and 12% for the project area. The average permeability for the project area is less than 5 md.

The reservoir is highly stratified as a result of depositional processes, with Dykstra-Parsons coefficient values in the 0.75 range. The producing interval is divided into two hydraulically separated intervals: the Main Pay and the Lower Pay. The oil/water contact (depth of 100% water production) for the Main Pay is at a subsea depth of -1890 ft. Lower Pay is wet in this part of the field. The oil/water contact varies slightly across the field due to the capillarity of the reservoir rock. The underlying water provides little pressure support and the primary drive mechanism is solution gas. An anhydrite seal at the top of the reservoir section creates the trap. The productive limits of Welch Field are controlled by a combination of structure and permeability variations. The Main Pay loses permeability moving northward, in the updip direction and it produce excess water in the downdip direction. At West Welch, production is

from the Main Pay in the south and from the Lower Pay in the north. Production in the project area is from the Main Pay. Many of the original wells in the south and central part of the Unit have produced in excess of 300 MBO. Cumulative oil production tends to be less in the north. From a comparison of permeability profiles and gamma ray logs, it was recognized that certain gamma ray spikes within the Main Pay correlate with the thin, low permeability intervals. These boundaries could be correlated from well to well through the entire project area, and form the basis of the layering for the model. Basically, the reservoir is described in nine layers separated by ancient flooding surfaces. Each layer is a continuous rock unit across the model area. Because of variability in the diagenetic processes, these layers do not have uniform properties throughout but should exhibit bounded flow character. Lateral discontinuities within a layer are expressed by rapid changes in porosity and permeability. This variability has an adverse affect on the sweep efficiency of any flooding mechanism.

In original "geologic" model, reservoir parameters were simply contoured between the wells for each layer. This model was used to justify the continuation of the project into Budget Period 2, the demonstration phase. In Budget Period 2, the model was enhanced by using the 3-D seismic data to constrain the total porosity-thickness in the interwell locations.

DEVELOPMENT HISTORY

Welch Field was discovered in 1941 and was initially developed with 40-acre well spacing. West Welch Unit has been under waterflood since 1963. Unit production peaked at 9000 BOPD in 1971. Infill drilling from 1980 to 1991 stabilized the producing rate at 2000 to 3000 BOPD. Later, limited infill drilling and well maintenance work reduced the annual decline rate to 4%, but the economic margin associated with this work has become increasingly narrow. We anticipate the Unit decline rate to increase 7 to 10% as such work can no longer be justified economically.

West Welch Unit consists of approximately 350 producers and 200 injectors in a line drive pattern of varying density. Currently the unit is producing around 2,500 BOPD and 23,000 BWPD. The average well produces 7 BOPD and 65 BWPD. All produced water is reinjected at West Welch Unit.

Most of the producers in West Welch Unit were completed openhole. Casing was set at the top of the pay interval, and then the producing zone was drilled out. All of the producers have been frac'd. Attempts to stimulate production by a second fracture treatment have generally failed, leading to the conclusion that the initial fractures are still open and sufficiently clean to contribute to the well's flow rate. The combination of the openhole completions and the fracture treatments limits the determination of the layers, which are contributing to the production. Profile modification in producers is difficult because of the open-hole completion.

The earlier injectors at West Welch Unit are also open hole completions. Many of these wells, which were producers prior to their conversion, were also fracture stimulated. Injectors drilled since 1980 are typically cased hole completions. These wells were rarely frac'd, though they

may have been acidized several times. The problem in determining the injected water distribution into individual layers is complicated by the field-wide practice of injecting water above the formation parting pressure. In order to inject a sufficient volume of water into the reservoir, it is necessary to inject above the parting pressures. In various areas of the Unit and in the project area, attempts have been made to reduce injection pressure below the parting pressure. In every case, some reduction of water and oil production was seen, indicating that some water cycling was happening at higher injection pressures. The oil reduction suggests that the high injection pressure probably result in the flooding of low permeability reservoir.

Common producing problems at West Welch Unit include corrosion, scale precipitation in producers, paraffin precipitation in well bores and flow lines, and casing leaks. We strive to control corrosion through the use of chemicals to protect steel from corrosive fluids. Scale formation rarely seems to adversely affect production. Scale most often accumulates in the lower part of the reservoir section, and communication with the wellbore can still be maintained through the propped fracture. Experience has shown that except for cases of extreme accumulation, scale cleanouts rarely improve producing rates and are not generally justified. Paraffin is removed by pumping heated fluids down well bores and flow lines. Casing leaks generally occur in the older wells and are most often repaired by the installation of steel liners. All the producers in the West Welch Unit are on beam pumping units. They are sized on the total fluid production of the individual wells. Installation of additional pump-off controllers has reduced the electricity usage and prolonged the life of the pumping components.

SECTION 2: COMPLETED TASKS

CO_2 STIMULATION TREATMENTS

One new technology that was investigated as part of the DOE project at West Welch Unit was the use of CO_2 stimulation to enhance the early recovery of tertiary reserves from producers in the CO_2 flood area. The fundamental process involved injecting CO_2 into producing wells at pressures exceeding the minimum miscibility pressure, allowing the CO_2 to diffuse into the reservoir fluids, and then producing the oil that is mobilized by the CO_2, along with the secondary oil that may have banked up in the vicinity of the producer, while the well was shut-in.

This process was expected to have particular application for relatively low-quality San Andres reservoirs, like Welch Field. Lateral heterogeneities may limit ultimate oil recovery from these reservoirs. In a mature waterfloods, the lowest pressures are expected in mostly discontinuous intervals around the producers. These intervals are drained of primary reserves and lack pressure support from offset injection. If their permeability is within range of the continuous intervals, CO_2 stimulation can increase oil recovery from such discontinuous intervals as CO_2 moves preferentially through the oil phase and mobilizes oil by swelling and viscosity reduction. In CO_2 floods, reservoir pressure near producing wells typically falls below minimum miscibility pressure and by injecting CO_2 at the producers above the minimum miscibility pressure, more true tertiary oil can be recovered from this region of the reservoir. The early oil rate increase from such CO_2 stimulation can help offset the high early investments needed for CO_2 flooding. In many San Andres reservoirs, years of CO_2 injection may elapse before any significant increase in oil rate is seen. Tertiary oil recovery early in the project life will help economic viability of marginal projects.

The goal of the initial demonstration of CO_2 stimulation in Budget Period 1 was to quantify recovery from the CO_2 treatments and provide information for optimizing future treatments. Five wells, with wide variations in producing and formation characteristics, were chosen for this field test, which stared in the third quarter of 1994. The oil producing rates from these wells varied from 3 to 30 BOPD with watercuts ranging from 70% to 97%. Another consideration in the well selection was the availability of excess pumping capacity, in case the wells would produce extra volumes of oil and water following the treatments.

Laboratory data used in the design and analysis of the stimulation treatments included oil swelling tests as a function of pressure and CO_2 concentration, CO_2 diffusion rates in oil, gas-oil relative permeabilities, slim-tube miscibility data, and oil viscosity as a function of CO_2 concentration. Other data included pressure build-up data used in estimates of reservoir permeability and pressure. This data was used to determine the optimum shut-in time and recovery predictions...The treatment sizes were varied from 5,000 to 15,000 MSCF to study the effect of CO_2 volume on the oil recovery. See Reference 2 for details of these calculations and results.

CO_2 was trucked and stored at each wellsite at pressures and temperatures that kept the CO_2 in liquid form. It was important to keep the CO_2 in liquid form for storage and improving pumping efficiency. Injection equipment consisted of 200-ton trailer-mounted supply tank, and a trailer-mounted skid with a diesel-powered positive displacement pump equipped with a bypass, a gas-liquid separator and turbine meter. Two-inch steel injection lines connected the pump to the wellhead. Packers were installed in the producing wells for the injection, soak, and flowback periods. Bottomhole injection pressures ranged up to 3200 psi. Wellhead temperatures ranged from 10 to 25°F during injection while bottomhole temperatures remained near the normal reservoir temperature of 95°F. The length of the injection period varied from 125 to 265 hours, depending on the injectivity and CO_2 volume. The maximum injection rate was 3.2 MMCFD. The soak periods varied from 16 to 24 days.

The wells were initially on natural flow, but as the rates fell, these wells were returned to artificial lift. Gas anchors and backpressure valves were used to control gas-locking problems. Plunger lift was attempted on the first well, but was unsuccessful due to varying producing conditions. Flowback was initially through a stack pack and frac tank. The stack pack was used for the early flowback when wellhead pressures were too high to produce into the production lines and separation equipment without taking large pressure drops. The stack pack heated the fluid flowing back so pressure drops associated with high gas volumes would not cause freezing and plugging in the flowlines. Also, the stack pack had 3-phase separation and metering. The frac tank volumes were used as a check on the stack pack metering.

The typical SITP after the soak period ranged from 800 to 1300 psi. When the wells were opened, they flowed back primarily CO_2 for periods of 5 to 30 days. Estimated 37 to 55% of the injected CO_2 was produced, either as free CO_2 or as solution gas. The remaining CO_2 was either never produced or produced at rates too small to measure.

The wells were typically pumped for 10 to 20 days, after which they started producing at their pre-treatment rates. Incremental oil was seen in three wells. These wells were considered technical successes. The two technical failures were the wells that received only 5000 MSCF of CO_2 and had the lowest volume of CO_2 injected per foot of phi-h. The results suggest that 1200 MCF/ phi-h will recover around 2000 bbls of incremental oil at this location. This CO_2 volume is considered a minimum treatment volume for future CO_2 stimulation treatments at West Welch Unit. The three technical successes recovered incremental production over one to two years period following the treatments, with post-stimulation rates approximately 20 to 30% higher than pre-stimulation rates on the average. The CO_2 utilization rates ranged from 5.5 to 7.5 MSCF/BBL. The incremental oil recovery for the three technical successes was within 25% of the predicted recovery.

Determining economic benefits of CO_2 depend upon several factors. First, it needs to be determined whether the production loss during the injection, soak, and flowback periods is lost or deferred. This volume was considered to be deferred in this analysis of results. Second, the treatment costs must be minimized. The CO_2 well stimulation can provide incremental oil recovery if pipeline CO_2 at reasonable prices is available.

Fieldwork in 1997 focused on the preparations for the CO_2 flooding and CO_2 injection was initiated upon completion of the distribution system in October 1997. The seismic-enhanced model had predicted gas breakthrough and oil response by mid-year in 1998. There was some concern that a larger program of CO_2 stimulation treatments would mask the main flood response. Establishing the accuracy of the model would be an important goal of the project. At the end of 1998, the low oil prices made the purchase of extra CO_2 for stimulation difficult. In 1999, the operator began injecting H_2S-contaminated CO_2 at West Welch Unit. Safety concerns associated with the use of high-pressure sour gas, precludes the stimulation of producing wells using temporary hook-ups.

FRACTURE TREATMENTS

Better understanding of he benefits and risks of fracture treatments at West Welch Unit have been achieved as these treatments are implemented and monitored. At the end of Budget Period 1, the use of relatively large fracs to improve the sweep efficiency around injectors seemed to hold promise. But subsequent field performance made their potential doubtful. Instead small fracs were used to enhance the injectivity in areas where reservoir quality degrades.

Wellhead injection pressures at West Welch Unit have varied from 400 to 1800 psi. The injection pressures have often exceeded the formation parting pressure. While this practice may seem contrary to generally accepted waterflood guidelines, at West Welch it was necessary to inject at higher pressure, to get significant volume of water injected. It is due to the low reservoir permeability and poor water quality. Such conditions are typical for many waterfloods in this area. Water breakthrough and pressure testing over time indicated that the fractures are generally induced in the east-west orientation. The current east-west line drive pattern is designed to take advantage of this orientation.

Like much of the West Welch Unit, the injector rows in the southern half of the DOE Project Area have not been infill-drilled to the 20-acre spacing. It was felt that by optimally fracturing the rows of injectors with 1320' spacing, a linear CO_2 flood front could be established that would improve the sweep efficiency of the tertiary process. Since the fracture stimulations should also enhance injectivity, it was felt that these stimulations would in effect eliminate the need for drilling infill injectors. Such cost savings would improve the economics for CO_2 floods in lower-quality reservoirs.

During Budget Period 1, a fracture simulator was used to design an optimal fracture treatment that would obtain maximum fracture wing length while keeping the propped fracture within zone. To test the model's design, passive seismic measurements were used to map fracture growth when the demonstration well, WWU 4807, was fractured in 1995. This well was acidized on initial completion in 1948. It was converted to water injection in 1964 and fractured with 20,000-LB sand in 1966. Such stimulations are typical for the injectors in the southern part of the DOE Project area.

Various tests and analyses were performed to design optimum fracture stimulation for WWU 4807. Well log and core data from area wells were used to set up the initial 3-D fracture model. A full wave sonic log was used to quantify layer stresses and core testing validated the results. A fall-off test was used to estimate the remaining effectiveness of the 1966 frac. A step rate test was run to confirm the indicated parting pressure at 3150 psi. It was followed by an injection survey to determine the water distribution in the wellbore.

Due to uncertainties concerning the 1966 frac, special care was used to design the re-frac to minimize out-of-zone growth. At West Welch Unit, an anhydrite layer, locally known as the N-marker, should provide an effective barrier to upward fracture growth caps the reservoir. Furthermore, the formation above and just below the anhydrite has negligible porosity. In the DOE Project area, the Lower San Andres below the productive interval has good porosity and permeability, but it is below the oil-water contact. The Main and Lower San Andres are separated by a layer of dense dolomite, typically 45 ft thick, that has a stress resistance similar to the reservoir rock, and is not expected to serve as a reliable barrier to downward growth. These petrophysical constraints were kept in mind during the analysis of the 1966 frac and in the design of the re-fracs.

A comparison of the 1995 fall-off test results and a model analysis of the 1966 stimulation suggested that almost half of the fracture's original conductivity had been lost. This loss can be attributed to several mechanical repairs on the wellbore, including the setting of a liner through the Main Pay interval in 1983. The simulator also suggested that the frac grew out of zone. Although the 1995 injection profile indicated uneven distribution, it showed that injection was confined to the Main Pay in the immediate vicinity of the wellbore. This result was supported by the observation that the pattern ratio of injection to production was approximately 1:1. Unless the offset producers are in communication with the same out-of-zone interval, the balanced injection suggests that the injected fluid be efficiently contained in the Main Pay. It was further assumed that if indeed the frac remained in zone, regardless of model results, then it must have attained a greater propped length than that predicted by the model.

The results of the analysis suggest the possibility that larger frac might be contained in the Main Pay. To maximize such development, the new fracture treatment was designed to place proppant in the Main Pay interval by initiating the frac with a high-density pad and follow it up with low-density nitrogen foam to carry the sand. The purpose of the foam was to utilize density override to place the sand higher in the fractured interval and away from the water zone and still obtain maximum propped length after fracture closure. The treatment would be pumped at a low 8 bpm rate to allow gravity forces to dominate.

The fracture stimulation was monitored using passive seismic techniques. An observation well, located 560 ft south of WWU #4807 and equipped with four geophone stations run at 50 ft spacing across the Main Pay interval, was used to monitor the seismic events during the fracturing process. Passive seismic events were recorded before, during, and after the fracture treatment was pumped. Various filters, which included a time-lag windows and band pass filters, had to be applied to identify events that were clearly linked to the stimulation.

Background noise from pumping the treatment proved to be another significant complication, and resulted in an almost zero detection rate of events. The highest detection rates occurred immediately following cessation in pumping. Twenty-seven events, associated with the fracture treatment, were identified. Once the events were found, their locations were calculated from the relative amplitude of the signal's shear and compression wave arrival times. When the different geophones gave greatly differing locations, the most common problem was in getting the depths to agree. It was believed that an interval at 4800', where the velocities differ significantly, caused a large part of this problem.

The plan view of the event locations(Figure 1) shows significant variation from a linear symmetrical fracture even though the anticipated east-west trend is evident. The east wing of the fracture created events up to 700 ft away, slightly over half the distance to the offset injection well. Also evident is an areal scattering of events east of WWU 4807. This scattering is thought to be controlled by compressive forces created as the main fracture is widened. Therefore, it was concluded that the 1966 fracture was still open toward the east, and that the 1995 treatment simply widened and extended the existing fracture. On the other hand, the closely spaced and aligned events on the southwest fracture wing suggest that this fracture was induced during the 1995 treatment. The departure from the expected east-west orientation was attributed to the presence of an underlying fault. Fault displacement is evident from the Woodford to the Atoka. Though this fault does not cut the San Andres, it may create a stress field that can affect the growth of induced fractures. Since the presence of the fault affected only the west wing of the fracture, its effects on areal stresses are considered to be very local, and not existing over the entire DOE Project area.

The fracture appeared to stay in-zone. The fracture stimulation treatment was tagged with radioactive isotopes and subsequent logging showed that most of the tagged injectant stayed in the perforated interval near the wellbore. A cross section of the passive seismic events confirms the logging results, though seismic events were recorded in the impermeable layers above the Main Pay and a single event was recorded in the Lower Pay in areas away from the wellbore. A post-frac injection profile shows an improved distribution of water in the Main Pay with little indication of out-of-zone injection.

While the fracture stimulation treatment of WWU 4807 appeared to have achieved the goals of obtaining over 400' of propped extension and still remain mostly in-zone, the results of CO_2 injection into this well suggested that the treatment yielded a well that is unusable as a CO_2 injector. Two anomalous events occurred after 11 months of CO_2 injection. First, CO_2 breakthrough occurred east of the WWU 4807 pattern in two wells. These wells, WWU 4965 and WWU 4922 are respectively located 1476 ft and 2087 ft northeast of WWU 4807. No breakthrough was apparent in any wells directly offsetting WWU 4807. This result suggests that the fracture stimulation did not yield an improvement in areal sweep. Instead, the CO_2 traveled down the east wing of the fracture, bypassing the reservoir in the vicinity of WWU 4807. Furthermore, the direction of the breakthrough was somewhat inconsistent with the orientation of the fracture inferred from the passive seismic analysis. Second, pressure was noted in the annulus of WWU 4816, an injector 1320 ft north of WWU 4807. When a sample

of gas from the casing was analyzed, it was found to contain over 90% nitrogen. The only possible source for this nitrogen was the nitrogen from fracture stimulation of WWU 4807. WWU 4851, a producer, is located between these injectors and nothing unusual has been noted in its performance. It appears that somehow, a flow path was opened between the two injectors to conduct the nitrogen from the foamed frac. Furthermore, this flow path is most likely in an interval above the Main Pay. Otherwise, pressure from the Main Pay injection in WWU 4816 should have kept the nitrogen from the wellbore. No seismic events were recorded by the passive seismic in the area north of WWU 4807.

These anomalous results suggest that large fracture stimulations at West Welch Unit did not produce predictable results, even when the best available tools were used for their design and monitoring. The results also suggest that the large fracs may not enhance the areal sweep of the reservoir. Because of the anomalous results associated with WWU 4807, this injector was returned to water injection. The probability of CO_2 following the nitrogen path appeared high and didn't warrant risking the loss of an expensive injectant. The out-of-pattern appearance of CO_2suggests that large fracs may actually heighten the effects of areal heterogeneities in this reservoir.

The operator does not intend to perform further work on this technology at West Welch Unit. The fracture stimulation technology available at this time did not enhance the results of a relatively large stimulation. Alternatively, the use of small fracture stimulation treatments to penetrate beyond lateral barriers shows promise. A fracture growth model was developed, refined, and successfully tested in the stimulations of several new producing wells during 1997 and 1998. The new fracture growth model verified that a fracture with a 400-ft half-length at West Welch would grow out-of-zone. This model indicated that to stay in-zone, the fracture half-length would be typically limited to less than 100 ft. The seismic-enhanced model indicated that a fracture with a 100-ft half-length would increase recovery by as much as 20 MBO per treated injector. Since most of the older injectors, that is, the wide-spaced injectors in the southern part of the DOE Project Area, have already been fracture-stimulated, this incremental oil has probably already been produced.

There are areas in the Unit where injectors exhibit minimal pressure communication with offset producers. These wells typically accept a small volume of water upon completion and then the injectivity falls off sharply. Efforts to increase injection using acid stimulation are typically unsuccessful. If the porosity does not show significant degradation, then it is concluded that barriers or simple reservoir discontinuities segregates a large portion of flow between the injector and producer. The only way to improve the performance of such an injector in water or CO_2 flood is to create a flow channel to the offset producers. In effect, a fracture is needed.

Such areas exist in the northwest portion of the DOE Project Area. This area is already infill-drilled and the injectors are 660 ft apart. Despite the close spacing, several of these injectors have performed as if they are isolated from all other wells. WWU 7915, a water injector, had taken less than 7,000 BBLS of water since its completion in 1985. In 1997, WWU 7915 was fracture stimulated with 11,000 lbs. of sand to determine whether a small fracture treatment

could successfully break through lateral connectivity barriers while staying in-zone vertically. Fracture modeling predicted a fracture half-length of 91 ft with a total vertical height of 175 ft. After the treatment, WWU #7915 flowed back oil and water for 56 days, before it was returned to injection. WWU 7915 currently injects approximately 150 BWPD. This rate is typical for injectors at West Welch Unit. While its flowing performance suggested that the induced fracture in WWU 7915 penetrated an area supported by offset injection, the injection rates of offset wells were unaffected when WWU 7915 was put back on injection. While rate increases are not yet apparent in offset producers, increased injection rate should ultimately yield incremental reserves. This northern area of the DOE Project Area is not yet under CO_2 flood.

Based on the results of the fracture stimulation of WWU 4807, the program to use large fracture stimulations to create a linear flood front and improve sweep in areas of widely spaced injectors will not be pursued. On the other hand, small fracture stimulations appear to be useful in areas where the suspected lateral permeability barriers are the cause of poor injectivity. The producers offsetting WWU 7915 will be monitored for response to the increased water injection rates.

3-D SEISMIC EVALUATION

Drilling based on 3-D Seismic Interpretation

Structure and porosity maps generated from the 3-D seismic data indicated that additional oil reserves might be present in the area south of the original DOE Project Area. This was also supported by the completion of WWU 6404 in April 1997 pumping 47 BOPD and 270 BWPD. This successful well, located south and east of the DOE Project Area, appeared to have a structural position similar to the area indicated by 3-D seismic data.

In October 1997, the DOE Project Area was expanded to include the southern area, after seismic interpretations identified the probable presence of additional oil reserves, This expansion was considered a logical extension of efforts to improve oil recovery by infill drilling and CO_2 flooding. The 275 acres in the expansion area included one row of existing injectors and fourteen drilling locations.

A drilling program for seven wells was approved and the first five wells were completed by February 1998. The last two wells were completed later in the year. The logs from these wells showed porosity that matched the 3-D seismic predictions to within 1 porosity unit (1%). Structurally, the Main Pay fell within the accepted error band of the prediction. With these matches to the 3-D seismic predictions, the technology used to interpret this data was considered to be successful. Unfortunately, the top of the reservoir was approximately 15 ft lower than anticipated and the amount of pay above the oil-water contact was minimal. While fracture stimulations treatments were used to stimulate rate, great care was needed to minimize growth below the water-oil contact. It was found that the best way to keep the fracture in-zone is to limit the size of the treatment and to pump at a relatively low rate, generally at around 8 BPM.

The initial potential tests of the seven wells totaled 200 BOPD and 638 BWPD. By September 1998, the well tests totaled 108 BOPD and 296 BWPD. These wells were economically justified on the expected recovery of 320 MBO. Early analysis indicates that these well may recover only 180 MBO. No additional drilled is planned in the expansion area. Even with the DOE sharing 50% to the drilling costs and using $17.50/STBO oil price, the results do not justify further investment in a similar drilling program.

RESERVOIR MODELING

A compositional simulator model using MORE, which is commercially available in both PC and UNIX formats was used to history match the waterflood performance of the West Welch DOE Project area. Initially the model used the basic geological description, but later it was enhanced by incorporating seismic data to constrain the porosity-thickness at the inter-well locations.

The model grid is 57X65X10, with approximate grid size of 80 feet. The layer 2 is subdivided into two layers, resulting in the ten layers used in the model. The steady state simulations and production type curves were used to provide permeability and effective thickness multipliers for a better history match. The steady state simulators matched the later waterflood history when the reservoir saturations are relatively constant. The history match shows the effective water injection was 60-70%.

The performance history was modified to incorporate the shut-in periods for the injection wells that were being converted to CO_2 injection. The resulting drop in reservoir pressure caused the model to predict a quicker CO_2 response than previous forecasts. Figure 8 compares the model CO2/water injection forecast, revised for shut-in period, to the actual injection. CO_2 injection began in the project area in October 1997. The actual CO_2 injection rates matched the seismic-enhanced model-predicted rates during the first four months of injection. Since that time injection rates have fallen below the rate initially predicted by the seismic-enhanced model, but they are above the predictions of the base geological model.

Two existing water injectors have been converted to CO_2 injection in the expansion area. The other two injectors in that line are temporarily abandoned water injectors. Because of the additional expense required to re-activate these wells, such work has been delayed until the results from CO_2 injection in the Project Area are evaluated. The reservoir model does not cover the expansion area, so estimates of tertiary reserves directly resulting from injection in this row are not available. The reservoir quality is, however, consistent with the quality of the area in the southern part of the Project Area. The expectation of similar tertiary recovery was enough to justify CO_2 injection in the expansion area. There is a chance that the injection of CO_2 in the southern row may improve the performance of the new producers.

No CO_2 breakthrough was detected until July 1998 when a high CO_2 content was measured in one producing well. This breakthrough occurred earlier than predicted by the seismic-enhanced model, but later than what was forecast by the basic geologic model. Direct

comparison between actual performance and the forecast is difficult due both to the difference in the number of injection wells and the fact that actual injection rate in two wells is much higher than assumed in the model. The monthly injection volumes are shown on Table 1. It will take one or two years of actual performance to fully establish the accuracy of the seismic enhanced model.

Development of the fracture growth model was completed and successfully tested on new wells. The model results indicate that a fracture wing length of 400 ft will grow out-of-zone and result in CO_2 loss in an injector. Smaller treatments, which would keep the injected CO_2 within the zone, were investigated as to improvement in areal sweep efficiency. For the smaller fracture stimulations, the model forecasted reserve increases of about 20,000 BO per injector. In contrast, the 400-ft fracture length treatments were projected to increase reserves by about 100,000 barrels per injection well treated. It is very doubtful that a large frac can be contained within the zone.

SECTION 3: ONGOING TASKS

CROSS-WELL SEISMIC PROGRAM

During Budget Period 1, 15 lines of interwell tomography and vertical seismic profile (VSP) data were acquired(Figure 2). Tomography uses the transmission dataset while reflection data is used to generate the VSP's. To collect this data, receivers were run in offset producing and injection wells and source devices were run in the two observation wells. Data was recorded as these devices were moved up and down in the wellbores. Advanced Reservoir Technologies (ART) designed the program, collected the data, and processed and interpreted the results.

At the time that the DOE Project was planned, the intent was to collect and process the cross-well seismic data prior to injection and again, at the end of the first WAG cycle. Differences in the seismic response times would indicate the location of the CO_2 in the reservoir. To date, only the base data has been collected since the volume of CO_2 injected is considered to be too small to be detected. Instead, the processing and interpretation work has focused on developing a methodology that would reveal interwell details of the reservoir's flow units.

Inter-well reflection imaging is a relatively new concept that has never been tested for survey lines of the length obtained at West Welch (700 ft to +2000 ft). Experimentation during the Phase 1 acquisition period resulted in obtaining reflection data of usable quality on many of the survey lines. The dominant frequency recorded in these data sets was on the order of 600 to 700 Hz over interwell distances characteristic of many reservoirs. Consequently, this type of imaging has the potential for achieving a higher level of resolution in reservoir characterization than was previously possible.

But by the end of Budget Period 1, efforts to extract usable information from the interwell VSP seismic data had not advanced significantly. Data of this type had not been acquired under actual production environment before, and some key processing procedures were not really available or suitable to the requirements of this type of data. ART developed the needed techniques to extract usable information from the recorded data. The circumstances and limitations under which the data sets were acquired created a number of difficult problems that had to be overcome before reliable interpretations could be obtained.

One of these problems involved the basic geometry of downhole data acquisition. The reflection angle is not an issue with surface seismic except for extremely shallow formations because the critical angle, where the signal skips along the reflection surface (refraction) rather than reflects back to receivers at the surface, is never approached. Due to the closeness of the source and receiver to the target zone in cross well seismic surveys, the critical angle can be easily exceeded. The higher above the zone of interest the source and receivers are placed the smaller the reflection angle.

Cost effective data acquisition is a trade-off of several factors. Optimum height for source and receiver is a function of distance between the two wells involved (span). The greater the span, greater the optimum height. But the greater height increases the seismic ray travel path resulting in more attenuation of the signal and a lower frequency. The advantage of cross well seismic is the ability to record a high frequency signal that permits more detailed resolution of reservoir features. Getting complete reflection data set coverage across the whole span is also a function of source and receiver position and span length. The source and receiver tool configuration used during data acquisition required repositioning during the survey to get sufficient span coverage and height above the zone for critical angle consideration. Repositioning translates into additional time and money so this became another factor in the trade-off.

Another problem specific to the processing of downhole seismic data is signal recognition and separation. Separating the reflection event from the more powerful direct arrival event is necessary to image zones near the wellbore. By properly determining the reflection angle, the data sets can be separated to emphasize the reflection arrival event and suppress the direct arrival event. Angle determination was very time consuming work but ART was eventually able to automate the procedure and successfully process the near wellbore reflection data.

Finally, one-half of the interwell reflective data set on each survey line was recorded by moving the receivers to a new position. This permitted the 3-phase receivers to rotate from their original known orientation. It was necessary to adjust for this rotation before the data set could be processed over the entire span.

The interwell reflection imaging was accomplished over the entire span between two wells by tying the interwell vertical seismic profile (VSP) sections to wellbore synthetics. First, synthetic VSP sections were generated from acoustic well logs using filters to produce a wavelet that would tie to interwell VSP data. The best ties were achieved for spatial wavelengths of about 30 ft that correspond to the dominant interwell frequency of 600 to 700 Hz. Cyclic stratigraphic sequences in the Welch reservoir produce bed thinning, thickening and terminations that are readily seen on the well log synthetics, but were not readily apparent on the initial interwell VSP sections, the interwell sections had been originally processed using gain control to enhance amplitudes. The gain control obscured the fine reservoir features that the technology was attempting to delineate. The data was reprocessed to obtain sections closer to true amplitudes. This produced sufficient amplitude variation so that the reservoir character seen by the wellborn synthetics could be resolved in the interwell sections.

The interpreted seismic amplitude sections are shown by Figure 3, survey line No. 1 in the north pattern and Figure 4, survey line No. 12 from the south pattern. Trace spacing in each example is one ft over a vertical span of 240 ft for the live data trace (4760 ft to 5000 ft from ground level at the source well). A portion of the dead trace or zero amplitude was included above the reservoir zone to aid in locating the traces laterally. Amplitudes are uniformly scaled to clearly show the variation in the reflective amplitude across the line. Several zone terminations can be seen in these sections, indicating a lack of lateral continuity in some of the

permeable units. This type of reservoir description is important in building a geologic model for performance simulation.

Due to the broad bandwidth of the reflection data, the migration algorithms in the available VSP geometry seismic processing systems proved unsatisfactory. It was necessary to utilize a VSP to common depth point (CDP) transform to obtain initial interpretations. The interwell reflective data have since been reprocessed with new migration algorithms. This reprocessing has resulted in imaging major flow units 10-12 ft thick. Actual resolutions may be finer than this where closely spaced major reflectors are present. The thinning and/or termination of beds are visible in the reprocessed sections. This type of vertical resolution is not achievable with surface seismic data.

The relationship between shear velocities (V_s) and compression velocities (V_p) was investigated as a method for identifying rock types. Shear waves travel through the rock matrix and are not affected by fluid movement in contrast to compression waves, which are affected by both rock matrix and fluid properties. Differences in the relationship between shear and compression wave velocities should highlight different rock types. A plot of cross well V_s versus V_p for the total cross well data set is shown in Figure 5. Figure 6 is an interpreted cross well seismic section along survey line 11 (Figure 1- South Pattern), depicting rock type.

The initial attempt at rock typing used polygons to identify groups of points located in the same area on the plot. Figure 5 shows a set of points on a crossplot outlined by a polygon. The data within the polygon correspond to an oolitic section identified in the core of well #4852, which is also the source well for the south cross well seismic lines. Earlier work involving the use of well log and core transforms to calculate permeability noted that this interval gave erroneous high permeability values and was probably an unaccounted-for rock type. However, the problem was not considered to be significant since it was only seen in a small interval in one core. In Figure 6, this rock type, represented by the lightest shade, shows this interval thickening to the south, representing a larger part of the pay interval then originally assumed. Rock typing is an essential part of the reservoir characterization that is needed for accurate reservoir simulation. Normally rock typing is limited to extrapolating between well bores. The technique being developed by this project allows the extension of rock typing into the interwell area based on actual data.

Figure 7 includes the Vs v. Vp data for the south pattern survey lines only and shows the separate linear trends that represent apparently different rock types. To facilitate the study, Advanced Reservoir Technologies was provided access to Oxy's seismic interpretation system and the Stacked Curve system that allows the combining of wellbore data (log or core) for various analytical procedures. Much of the cross well seismic data can be reduced to a log trace format that can be integrated with other data in the Stacked Curve system and displayed as cross sections. Further work is being done to determine the spatial distribution of these units and to better understand their physical properties.

AREA PREPARATION AND CONSTRUCTION

A majority of the construction work to be done in connection with CO_2 injection took place in the third quarter of 1997. This included fabrication of the CO_2 distribution system. A total of 15 well connections were fabricated for which 14 were installed. Stainless steel was used instead of carbon steel on piping that would be exposed to water and CO_2. The supply meters were piped with A.333-Grade 3 or 6 piping due to the low temperature anticipated during blowdown and depressurization.

Mobil ran hot taps into the Este CO_2 supply line and both the Mobil and Oxy CO_2 supply piping and the metering areas were installed and tested. All piping was pressure-tested with nitrogen prior to initiation of injection. Gas gathering facilities were upgraded to handle the anticipated CO_2 production. This included replacing PVC flow lines with fiberglass lines, installing three new high-pressure separators and laying a four-inch high pressure CO_2 line to the gas processing plant.

CO_2 injection was initially started in 12 wells within the project area. Since that time, other wells have been converted to injection, but various problems have prevented more than 12 wells being on injection at one time. Two wells were not capable of taking CO_2 at satisfactory rates. Casing leak has occurred in one well. It has been necessary to shut-in injection wells prior to working over to allow the high pressure to dissipate from around the wellbore.

Nineteen producing wells have been reworked by, lowering pumps, installing tubing and gas anchor, cleaning out and/or re-perforating. Two producing wells were reactived and one producer was successfully stimulated by a fracture treatment based on the fracture model.

FIELD OPERATIONS

Per optimization plan, water injection rates were reduced in the project area to reduce the injection pressure below the formation parting pressure. This resulted in significant drop in the oil producing rates. The CO_2 injection was initiated in October 1997. The project was scaled down due to several factors such as reservoir quality, well bore integrity and associated costs, and anomalous performance. Despite such scale down the number of CO_2 injector in the project has been maintained at an adequate level to test the accuracy of seismic enhanced model.

At the end of the fourth annual reporting period and after nine months of CO_2 injection, only low volume CO_2 break through has been seen in one producer and there has not been any oil response. No injector has yet been WAG'd. The actual performance is being closely monitored for comparison with model forecast,

The producers are tested at least once a month and more often if needed. All the producers are on pump off controllers. The surface CO_2 injection pressure average 875 psig, which

equals bottom hole injection pressure of 2500 to 2600 psig. The injection pressure on the water injectors varies from 1250 to 1700 psig.

TECHNOLOGY TRANSFER

George Watts presented a paper on the seismic guided mapping techniques[4] to the Society of Exploration Geophysicists at a workshop in Dallas during their annual meeting and international exposition November 2-7, 1997. Archie Taylor presented a paper on the integrated well logging methods[5] at the DOE-sponsored logging symposium held in Midland, November 13, 1997 and at the DOE-sponsored logging symposium held in Denver, January 13, 1998. Two papers[6,7] covering the project simulation work were presented at the SPE Permian Basin Oil and Gas Recovery Conference in March 1998. A synopsis of the seismic integration methods paper presented at the Recovery Conference was published in the SPE's Journal of Petroleum Technology. George Watts presented a paper[8] and poster session at the AAPG SWS convention on March 29, 1998.

REFERENCES

1. Hinterlong, G.D., "Characterization of Rock Type with Mixed Wettability Using Log and Core Data", March 1996, SPE 35160.

2. Taylor, A.R., Hickman, T.Scott et al, Application of Reservoir Characterization and Advanced Technology to Improve Recovery and Economics in a Lower Quality Shallow Shelf Reservoir, DOE Contract No. DE-FC22-94BC14990, 1996 Annual Report, September 27, 1996.

3. Hinterlong, G.D., "Use of Multiple Logs Curves to Predict Permeability in a Dolomite Reservoir, San Andres Welch Field, Dawson County, Texas," Oct. 31-Nov. 1, 1996, West Texas Geological Society Fall Symposium.

4. Watts, G.P., Hinterlong, G.D. et al, "Seismic Estimate of Porosity in the Permian San Andres Carbonate Reservoir, Welch Field, Dawson County, Texas," March 1996 Proceedings: Oklahoma Geological Society Workshop on Platform Carbonates of the Southern Mid-continent.

5. Hinterlong, G.D. and Taylor, A.R., "Combing Flow Theory and Multiple Log Readings to Improve Permeability Calculations", November 13, 1997 Proceedings: Advanced Applications of Wireline Logging for Improved Oil Recovery Workshop.

6. Hinterlong, G.D. Taylor, A.R. Watts, G.P. Kumar, K.H, "Improving Flow Simulator Performance with a Seismic Enhanced Geologic Model", paper SPE 39809 presented at the SPE Permian Basin Oil and Gas Recovery Conference in Midland, TX, March 23-26, 1998.

7. Taylor, A.R., Hinterlong, G.D., Kumar, K.H., "West Welch CO_2 Flood Simulation with an Equation of State and Mixed Wettability", paper SPE 39808 presented at the SPE Permian Basin Oil and Gas Recovery Conference in Midland, TX, March 23-26, 1998.

8. Watts, G.P., Hinterlong, G.D. and Taylor, A.R., "Seismic Description of a Complex Carbonate Porosity System, Welch Field, Permian Basin, Texas", paper presented at the AAPG SWS Convention in November 1997.

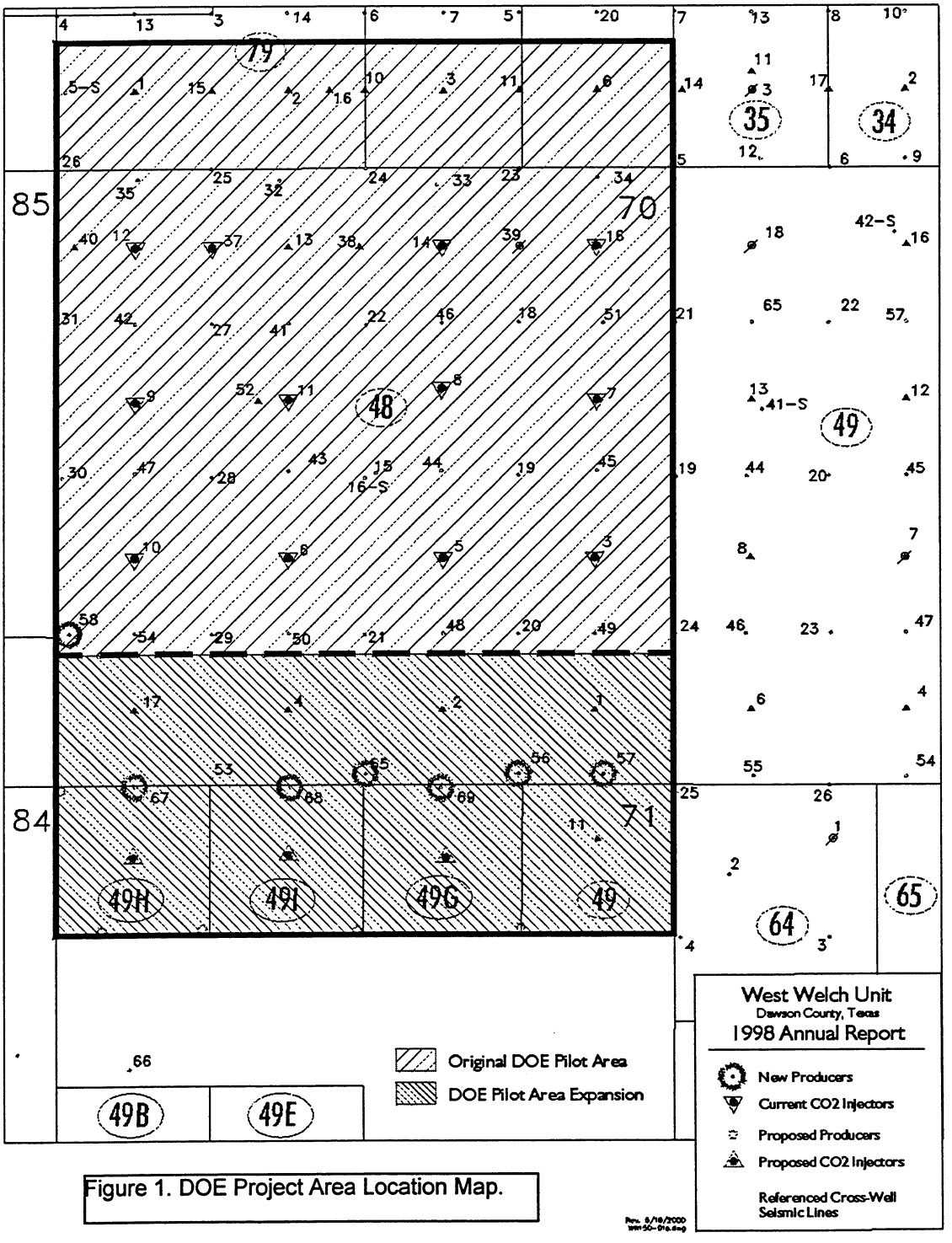

Figure 1. DOE Project Area Location Map.

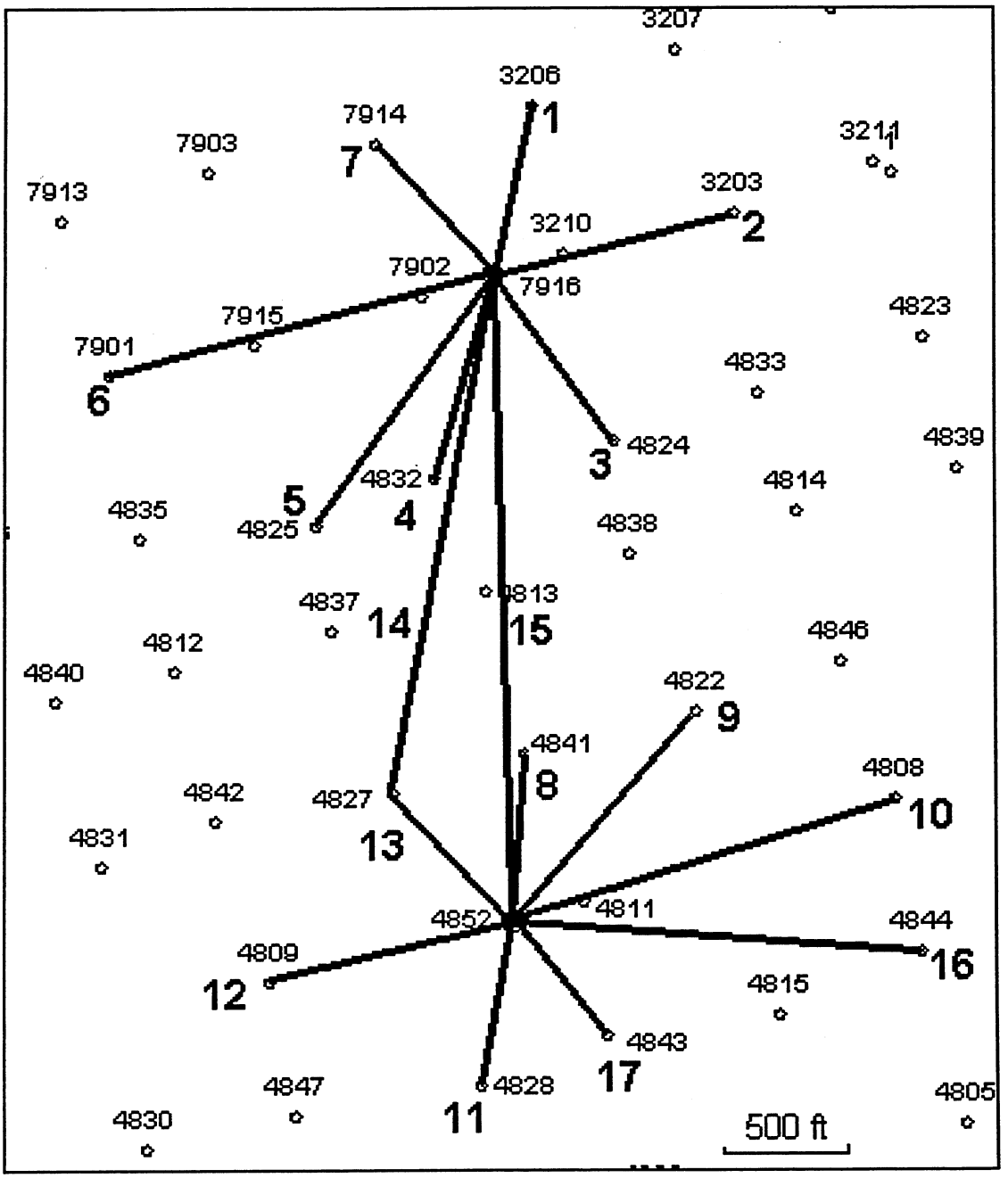

Figure 2. Map Showing Location of Inter-well Reflection

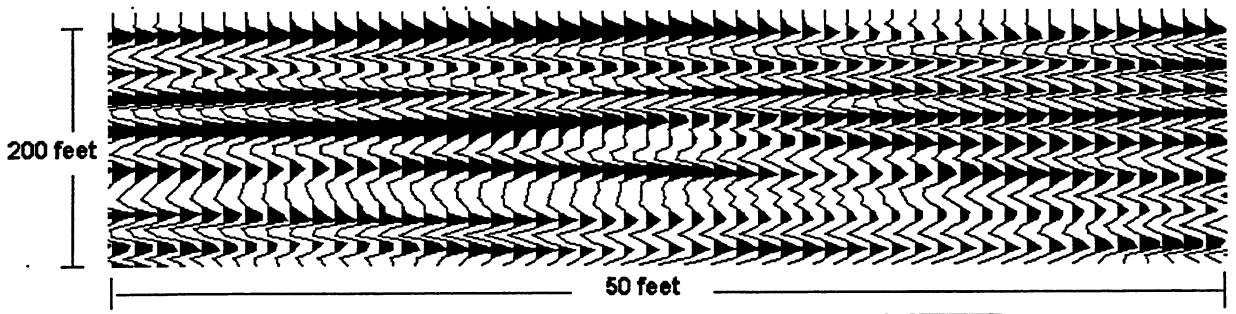

Figure 3. Portion of cross well reflection survey line 1 from well #7916 to well #3206.

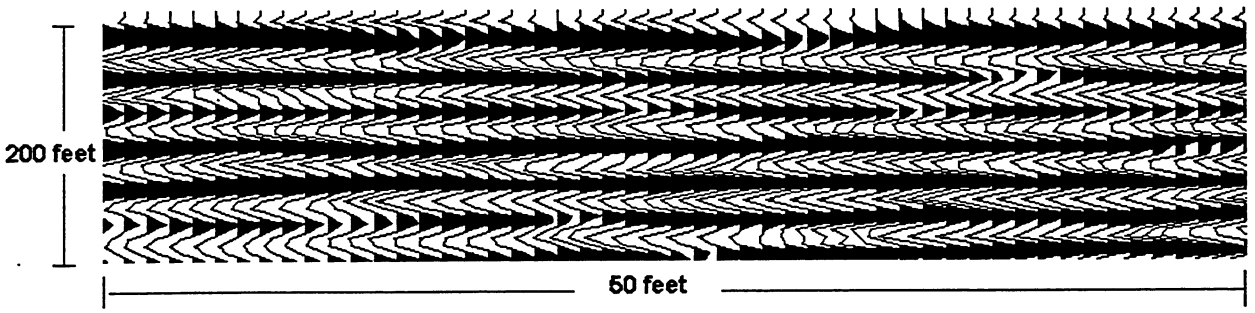

DOE 12

Figure 4. Portion of inter-well reflection image on line 12, extending from well #4852 to well #4809.

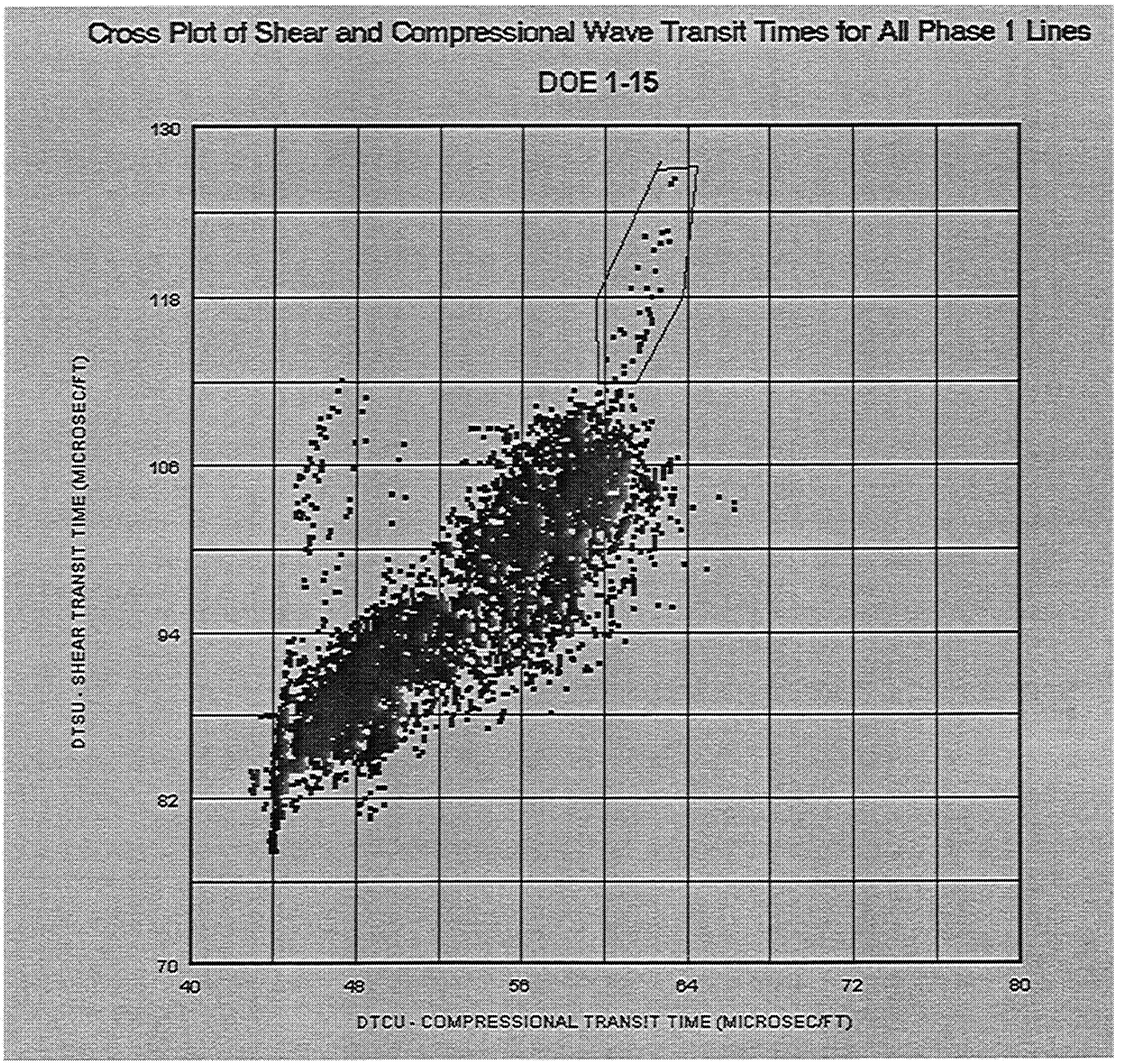

Figure 5. Shear wave travel times (DTSU) versus compressional wave travel times (DTCU) for the total cross well seismic data.

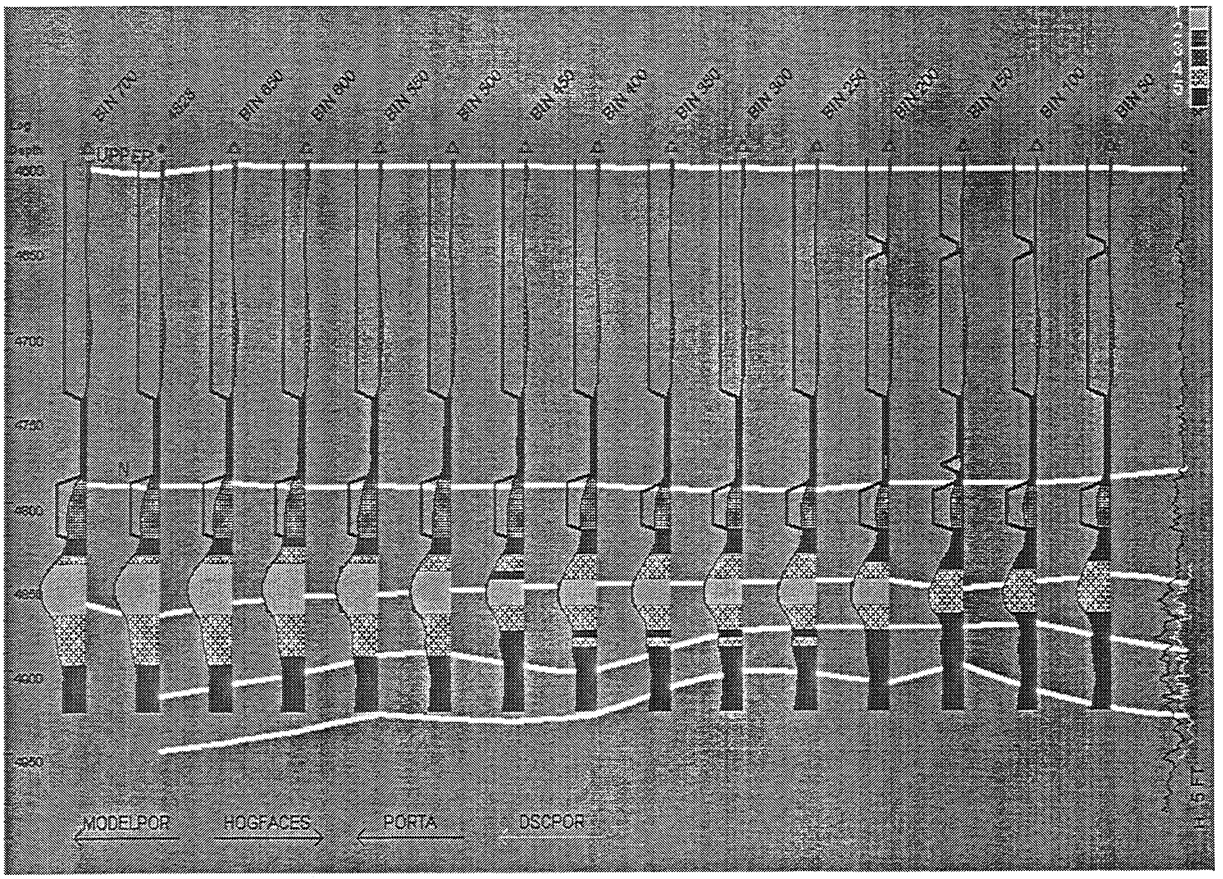

Figure 6. Rock types from cross well seismic for the south line from the source well # 4852 (right) to well # 4828 (left).

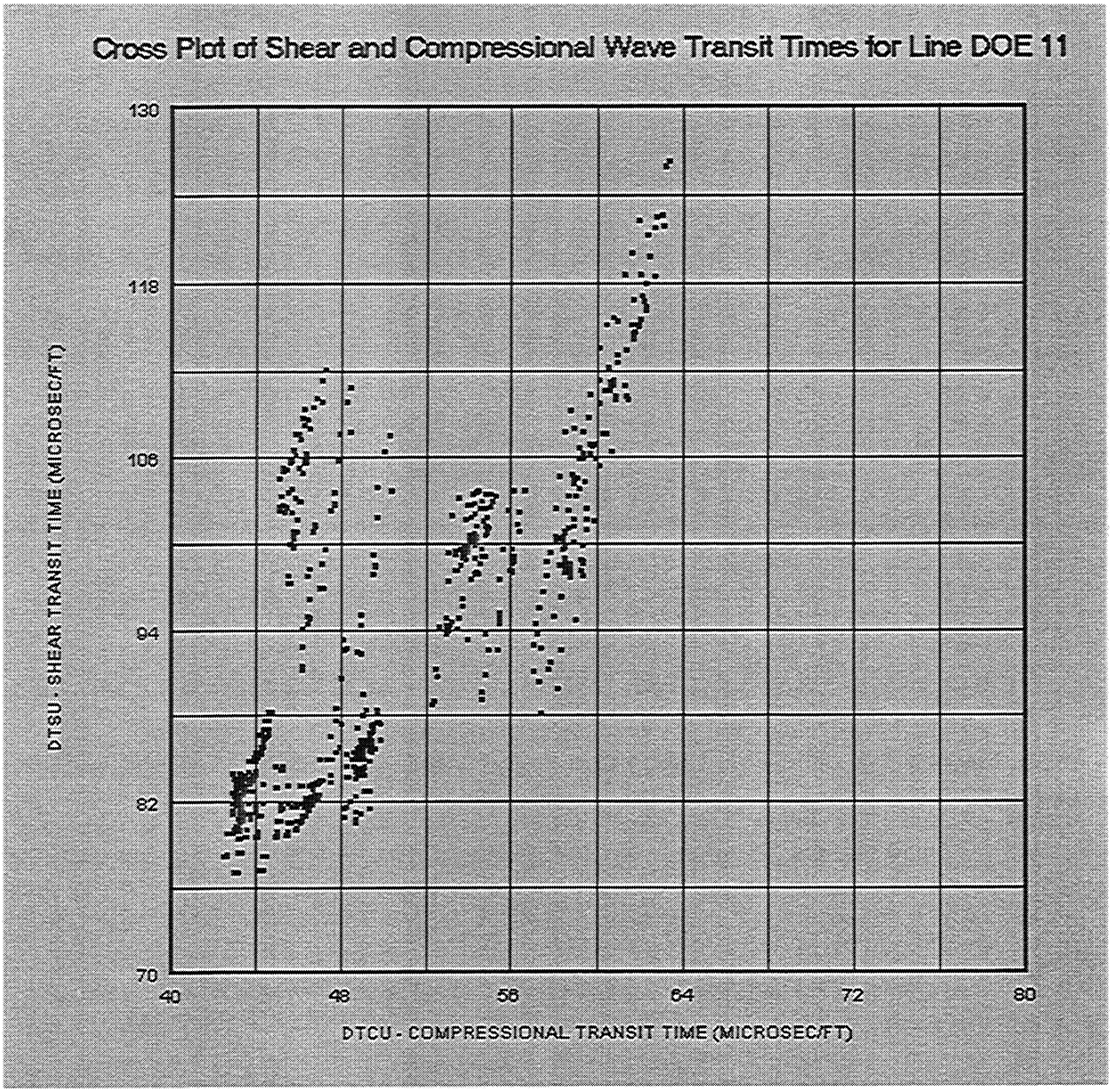

Figure 7. Cross plot of the south line crosswell compression (DTCU) and shear (DTSU) wave travel times.

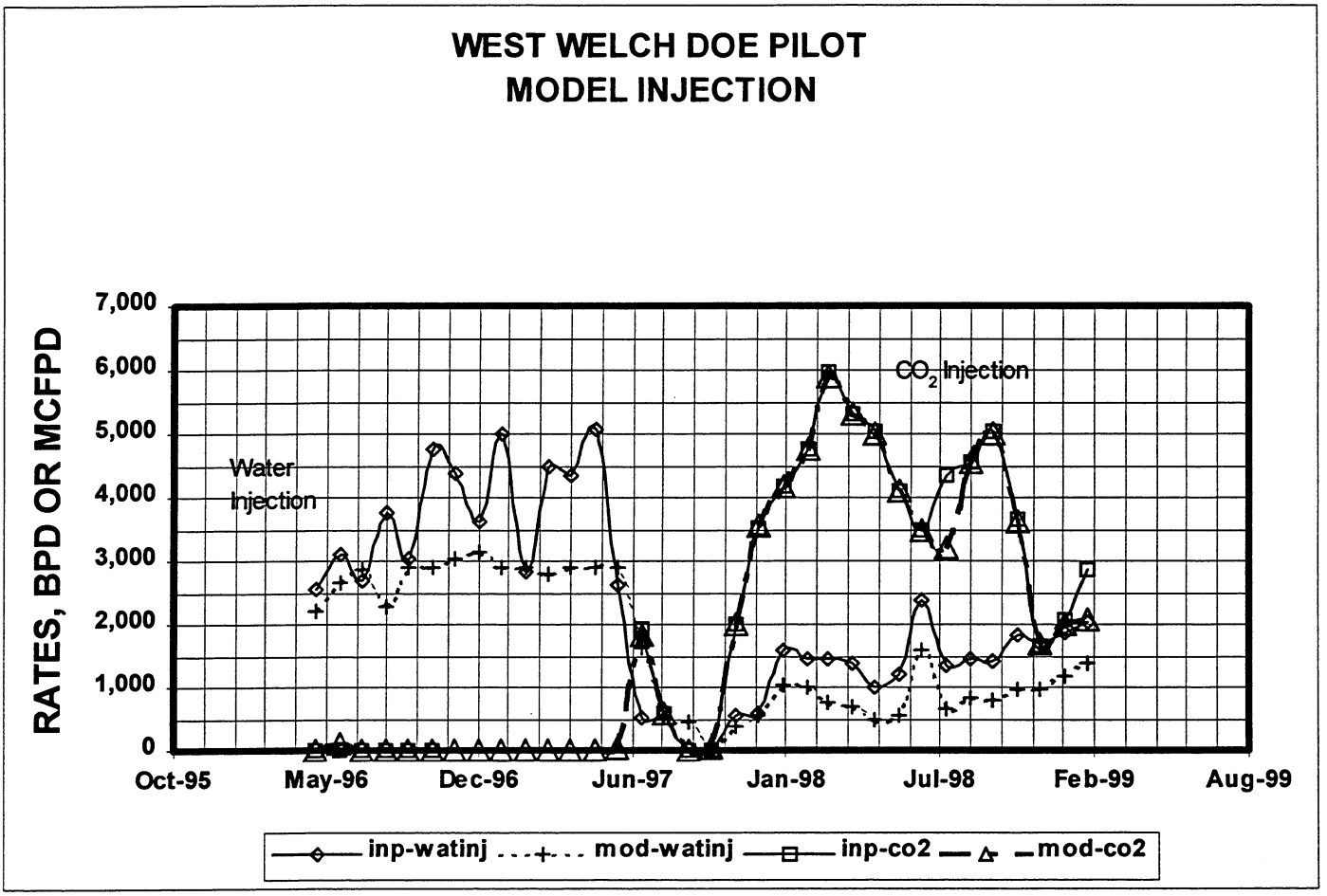

Figure 8. Model injection rates vs. actual injection rates

TABLE 1
CO_2 Injection Rate
West Welch DOE Project

Month	Rate/MCFD	No. of CO_2 Injectors
10/97	2187	
11/97	3780	
12/97	4596	
01/98	5227	
02/98	6650	
03/98	5959	
04/98	5444	12
05/98	4966	11
06/98	5172	11
07/98	5381	12