TUDRP

Determination of Cuttings Lag in Horizontal and Deviated Wells

Augusto José Garcia-Hernandez, University of Tulsa, Drilling Research Projects,
B.S. in Mechanical Engineering, Central University of Venezuela.

This report is prepared for TUDRP Advisory Board Meeting, November 14th -15th , 2005, Tulsa-Oklahoma.

Abstract:

A literature review, preliminary modeling, preliminary experimental work and recent development of this project are presented in this report. The literature review has been focused on cuttings transport in horizontal and slightly inclined well-bores, solid-liquid flow patterns (two and three layer models), particle slip velocity and particle tracking. To model the phenomena, correlations developed by Larsen[8], Iyoho[12] and Chien[18] were used to calculate the particle traveling velocity, and then it was used to associate the particles with their original location using other relationships. Preliminary experimental work has been completed using the Low Pressure Ambient Temperature Flow Loop (L.P.A.T.) and a high speed camera. Due to a recent development the current report includes a suggested modification of the flow loop in order to record the bed height in the inclined condition.

Project Status:

Project Status: Activity	Percent Accomplished
Literature Review	65 %
Flow Loop Training	95 %
Development of experimental technique	70 %
Experiments	5 %
Modeling	40 %

Table 1 - Project Status

Introduction:

This project focuses on experimentally determining the transport velocity of cuttings in horizontal and high-angle boreholes in order to produce a computer model for cuttings lag.

Cuttings transport is an important part of the drilling process. Numerous experimental studies have been performed to investigate factors related to cuttings removal from the well-bore and to optimize drilling efficiency. Several empirical and analytical solutions were developed in recent years. They provide good understanding of cuttings removal and allow modeling of this process. However, effective models of cuttings removal are important not only as a tool for drilling optimization, but as a good source of geological information.

Combining the different models of cuttings transport with the relationships between the source locations and the transport velocity of the particles, we are able to develop a mathematical model that predicts the original location of the cuttings that are being collected at the surface. The information obtained by this model would help characterization of the formation, well planning, mud program selection and other important aspects to be considered during the design of the drilling process.

Problem Statement:

During the drilling process, cuttings are generated at the bottom of the hole and transported to the surface by the drilling fluid. Essential information about the properties of the formation (type, strength, porosity, etc.) is inferred from the cuttings, but there is some uncertainty about the source depth of the cuttings during drilling operations. In addition, it is important to determine the original location where the cuttings were generated for formation characterization. In order to know the source depth of cuttings that are collected at the surface, it is essential to determine correctly the transport velocity of the cuttings. As we know, the cuttings transport velocity is directly related to the slip velocity. It is essential to highlight that the transport velocity is the most important parameter to consider when we compute the source depth. Therefore the main objective of the study is to determine the transport velocity of the drilled cuttings in the horizontal well-bore configuration.

Literature Review:

The literature review done for this project has been divided mainly into four parts: cuttings transport, solid-liquid flow patterns, particle slip velocity and particle tracking. An extensive summary of these different areas has been completed and it is presented in the following tables, where the most important parameters to consider for this project have been highlighted and studied.

Reference			Pipe/ Annulus	Experimental / Semi-Experimental / Mechanistic	Vertical / Inclined / Horizontal	Type of fluid	Type of Particles	Review
Author	**Year**	**Title**						
Sifferman, Myers, Haden & Wahl	1973	Drill Cuttings Transport Vertical Annuli	Annulus	Experimental	Vertical	Mud-bentonite ρ=12-15 ppg, water, oil	(ATSM mesh Nº 3 & 6), 1/8-in, S.G.: 1.6 & 2.6	Full Scale experimental facility was used to evaluate the effect of drilling hydraulics parameters such as rotary speed, drilling rate and eccentricity in cuttings transport
Tomren, Iyoho & Azar	1986	Experimental Study of Cuttings Transport in Directional Wells	Annulus	Experimental	Vertical-Inclined-Horizontal	Water , Low viscosity bentonite Carbopol and high viscosity bentonite muds	Real drilled cuttings, size 0.25-in, S.G.: 163.5 lbm/ft^3	Experimental study to determine the mayor factors affecting cuttings transport such as rheology, flow rate, inclination angle and eccentricity. Results indicate that the formation of cuttings bed produces drastic effect on particle and annular liquid velocity
Azar & Sanchez	1997	Important Issues in Cutting Transport for Drilling Directional Wells	General review of the factors that impact on hole cleaning in directional well such as annular fluid velocity, hole inclination, drill string rotation, eccentricity, fluid properties and characteristics of drilled cuttings.					
Ozabayoblu, Miska, Reed & Takach	2003	Cuttings Transport with Foam in Horizontal & Highly-Inclined Well-bores	Annulus	Experimental and Mechanistic	Horizontal and inclined	Foam, qualities from 70% to 90% (Power Law Fluid)	Normal Gravel 2-5 mm (s.g.=2.6)	Development of a computer simulator to predict the bed thickness and pressure drop for 2 and 3 layers flow pattern. Experimental data agreement with the simulator results with an error less than 20 %

Table 2.1 - Literature review on cuttings transport

Reference			Pipe/ Annulus	Experimental / Semi-Experimental / Mechanistic	Vertical / Inclined / Horizontal	Type of fluid	Type of Particles	Review
Author	**Year**	**Title**						
Zeidler	1972	An Experimental Analysis of the Transport of Drilled Particles	Annulus	Experimental	Vertical	Water , Mud (glycerin solution, using viscosities from 0.96 cp up to 114 cp), polymer solutions, bentonite slurries and water in oil emulsions	Irregular shaped particles, ASTM Nº 1/4, 4, 6, 8 and 10	An Experimental apparatus was developed to determine the settling velocity of drilled particles in a Newtonian fluid and also to study the transport of drilled particles in an annulus using both water and drilling mud. Correlations were developed for the settling velocity of the drilled particles and for the recovery fraction of the drilled particles subjected to turbulent flow of water in an annulus.
Chien	1997	Effect of Hydraulics and Fluid Rheology on the Transportation of Drill Cuttings in Horizontal Drilling	Establish a key relationship among the three dominant parameters involved in the solid-liquid two-phase flow, presented a calculation scheme to determine the magnitude of geometrical parameters associated with an annulus with bed and proposed the use of apparent viscosity of the drilling fluid evaluated at the cutting transport shear rate to correlate hole-cleaning parameters					

Table 2.2 - Literature review on cuttings transport

Reference			Pipe/ Annulus	Experimental / Semi-Experimental / Mechanistic	Vertical / Inclined / Horizontal	Type of fluid	Type of Particles	Review
Author	**Year**	**Title**						
Kelessidis & Bandelis	2004	Flow Patterns and Minimum Suspension Velocity for Efficient Cuttings Transport in Horizontal and Deviated Wells in Coiled-tubing Drilling	Annulus	Mechanistic and Experimental	Horizontal	Carboxyl-Methyl-Cellulose and water solutions	r =20.8 ppg, sizes: 0.04, 0.08, 0.16-inches	It provides a critical review of the state-of-the-art modeling for efficient transport during coiled-tubing drilling, its proposed s different approach for predicting the minimum suspension velocity, Modeling of two an three layers solid-liquid flow patterns, Laboratory system to enable the gathering data

Table 3.1 - Literature review on Solid-liquid flow Patterns

Reference			Pipe/ Annulus	Experimental / Semi-Experimental / Mechanistic	Vertical / Inclined / Horizontal	Type of fluid	Type of Particles	Review
Author	**Year**	**Title**						
Doron & Barnea	1995	Flow Pattern Maps for Solid-Liquid Flow in Pipes	Pipe	Mechanistic and Experimental	Horizontal	Water	Acetal Spheres, 3mm [1240 Kg/m3]	Flow Pattern maps were presented. The transitions between the flow patterns are then determined by means of a mechanistic three-layer model and compared with experimental data. The boundary between flow with a stationary bed and flow with a moving bed exhibits satisfactory agreement with the experimental data obtained.
Doron and Barnea	1994	Pressure Drop and Limit Deposit Velocity for Solid-liquid Flow in Pipes	Pipe	Mechanistic and Experimental	Horizontal	Water	Acetal Spheres, 3mm [1240 Kg/m3]	New experimental data on flow rates, pressure drop, delivered concentration and flow patterns for solid-liquid flow in pipes were presented. The three-layer model developed by Doron and Barnea in 1993 was compared to the new experimental data and other data from the literature, showing satisfactory agreement.
Hu	1995	Direct Simulation of Flows of Solid-liquid Mxtures	Simulation of a large number of solid particles motion in a flowing liquid using finite element technique based on moving unstructured grids. Using an developed numerical procedure, the Poiseuille flow of solid-liquid mixtures in a vertical channel was studied. For a sedimenting cylinder along the centerline of a channel, the computed terminal speed of the cylinder agrees with previously published numerical and theoretical results.					
Rabenjafimanantsoa et al	2005	Dunes Dynamics and Turbulence Structures Over Particles Beds, Experimental Studies and Numerical Simulations.	Pipe	Experimental and CFD Simulations	Horizontal	Water and PAC	Spherical glass beads of 250-300mm in diameter, ρ=2.52g/cc	Transport of particles in circular pipes involving formation of dunes in the transition flow regime. An Ultrasound Velocity Profile Monitoring Instrument was used to measure the instantaneous velocity profile over the dunes.

Table 3.2 - Literature review on Solid-liquid flow Patterns

Reference			Pipe/ Annulus	Experimental / Semi-Experimental / Mechanistic	Vertical / Inclined / Horizontal	Type of fluid	Type of Particles	Review
Author	**Year**	**Title**						
Rabenjafimanantsoa et al	2005	Flow Regimes Over Particles Beds. Experimental Studies of Particle Transport in Horizontal Pipes.	Pipe	Experimental	Horizontal and Inclined	Water and PAC	Spherical glass beads of 250-300mm in diameter, ρ=2.52g/cc	Analysis of slurry transport in horizontal and inclined pipes. Rheology has been reported to be very important for dune formation mechanisms. Relationships between pressure drop and transport velocity were used to identify the slurry flow regime
Ramadan et al	2004	Application of a Three-layer Modeling Approach for Solids Transport in Horizontal and Inclined Channels	Pipe	Mechanistic and Experimental	Horizontal and Inclined	Water and PAC	Normal Sand s.g.=2.6, four particle size range (mean size) 0.38-5.00 mm	Development of the three-layer modeling approach for solids transport. The model predicts the pressure loss and transport rate of solids. Comparison between the model and the experimental data shown agreement. Assumption of constant settling velocity. No predictions of the transition from a three-layer pattern to a two-layer or fully suspended flow pattern were presented. Comments about the formation of dunes and ripples during the test.

Table 3 - Literature review on Solid-liquid flow Patterns

Reference			Pipe/ Annulus	Experimental / Semi-Experimental / Mechanistic	Vertical / Inclined / Horizontal	Type of fluid	Type of Particles	Review
Author	**Year**	**Title**						
Chien	1992	Settling Velocity of Irregularly Shaped Particles	Pipe	Semi-Experimental	Vertical	Water & Non-Newtonian Fluids, density= 14ppg	ρ =22.5 ppg, dp= 0.125-in	A new correlation was developed to predict the settling velocity of irregularly shaped particles in both Newtonian and non-Newtonian fluids for all types of slip regimes. The results of the correlation agreed well with the experimental data. Comparison of the correlations obtained with data collected by previous investigator (Richards)
Sample et al.	1977	An Experimental Evaluation Of Correlations Used for Predicting Cutting Slip Velocity	Annulus	Experimental	Vertical	biopolymer, water & glycerin	Glass Spheres, ρ=2.5 gm/cc, dp=0.392-in. Cuttings ρ=2 gm/cc, dp=0.195 & 0.123 inches	General review of published correlations for predicting the carrying capacity of drilling fluids. Data comparison between this study and Sifferman study. A new simplified approach was developed for establishing the carrying capacity of drilling fluids. Of the published correlations evaluated, the method proposed by Preston Moore provided the agreement with the experimental data.
Patankar et al.	2002	Power law Correlations for Sediment Transport in Pressure Driven Channel Flows	Channels	Analytic and experimental	Horizontal		Carbolite Ottawa sand, ρ =2.65-2.71 g/cm^3, dp=0.06-0.09 cm	Study sediment transport in horizontal channels, proppant transport in fractured reservoirs using 2D direct numerical simulations and experimental data. Results of 2D simulations of solid-liquid flows gave rise to straight lines in log-log plots of the relevant dimensionless Reynolds numbers. The correlations obtained can be used as predictive tools or as a basis for models for sediment transport in simulators used for design purposes.
Joseph & Ocando	2002	Slip Velocity and Lift		Analytic	The lift force off a circular particle in plane Poiseuile flow perpendicular to gravity is studied by direct numerical simulation. The value of the Poiseuille flow velocity at the point at the particle's centre when the particle is absent is always larger than the particle velocity; the velocity is positive at steady flow.			

Table 4 - Literature review on Particles Slip Velocity

Reference			Pipe/ Annulus	Experimental / Semi-Experimental / Mechanistic	Vertical / Inclined / Horizontal	Type of fluid	Type of Particles	Review
Author	Year	Title						
Tomasz Dyakowski	2000	Applications of Electrical Tomography for Gas–solids and Liquid–solids Flows — a Review	Pipe	Experimental and modeling	Horizontal	Electrolyte flow	0.5 mm glass spheres	Review of electrical tomography methods for investigating, monitoring and controlling gas-solids and liquid-solids systems. Experimental results are presented. Instantaneous images, captured with the speed up to 200 frames per second, illustrate how flow patterns vary, and reveal the dynamic behaviors of two-phase systems

Table 5 - Literature review on Particles Tracking

Experimental Work:

Experimental Set-up:

Experiments will be performed in the LPAT flow loop facility. It is 90 ft long and consists of an 8-in. inner diameter transparent casing with 4.5 in. outer diameter drill pipe. A 75 H.P. centrifugal pump (maximum tested capacity is 650 GPM), is used to pump fluid into the flow loop. The cuttings are injected at the inlet of the annular test section where they merge with the test section. A visualization section has been used in the middle of the flow loop to obtain images of the particles.

There is a proposed modification of the flow loop in order to record the bed height of the particles using a video technique. It is basically a system that would consist of a mobile base that will have attached two cameras (standard video cameras). The mobile base will be moved parallel to the transparent casing. The cameras will be located next to the pipe on each side, which will be provided a view of the cuttings inside the transparent casing (see Figures 3, 4 & 5).

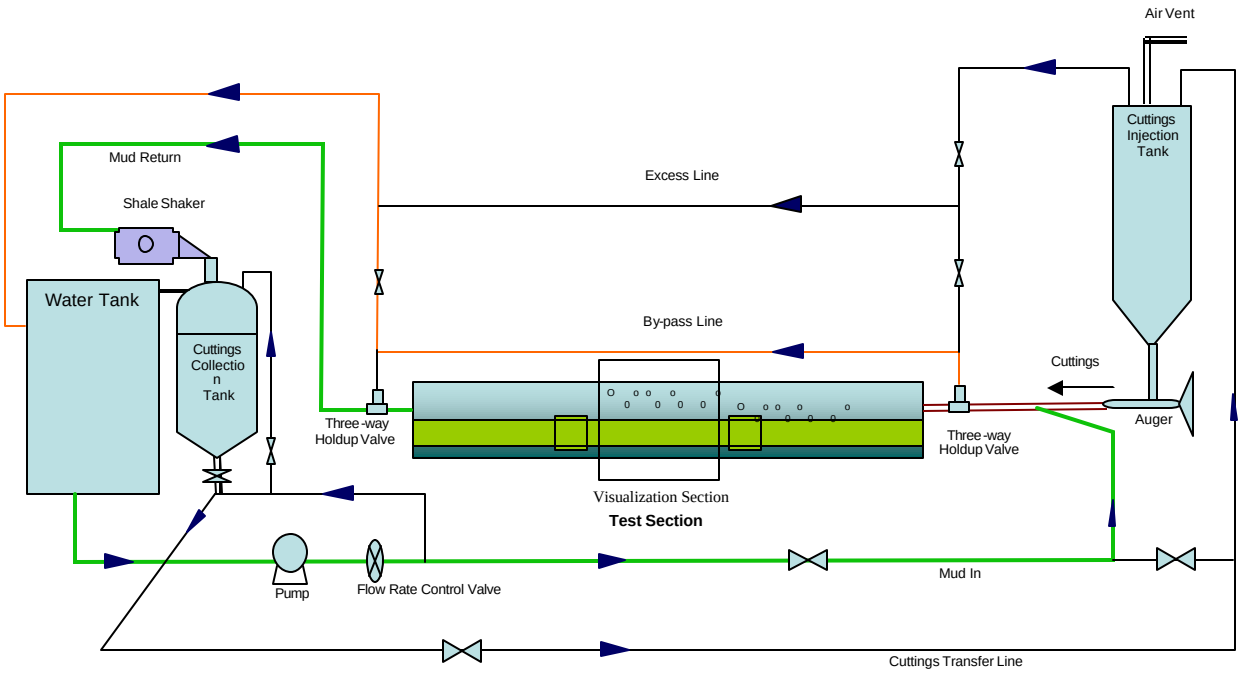

Fig. 1 - Schematic diagram of the flow loop

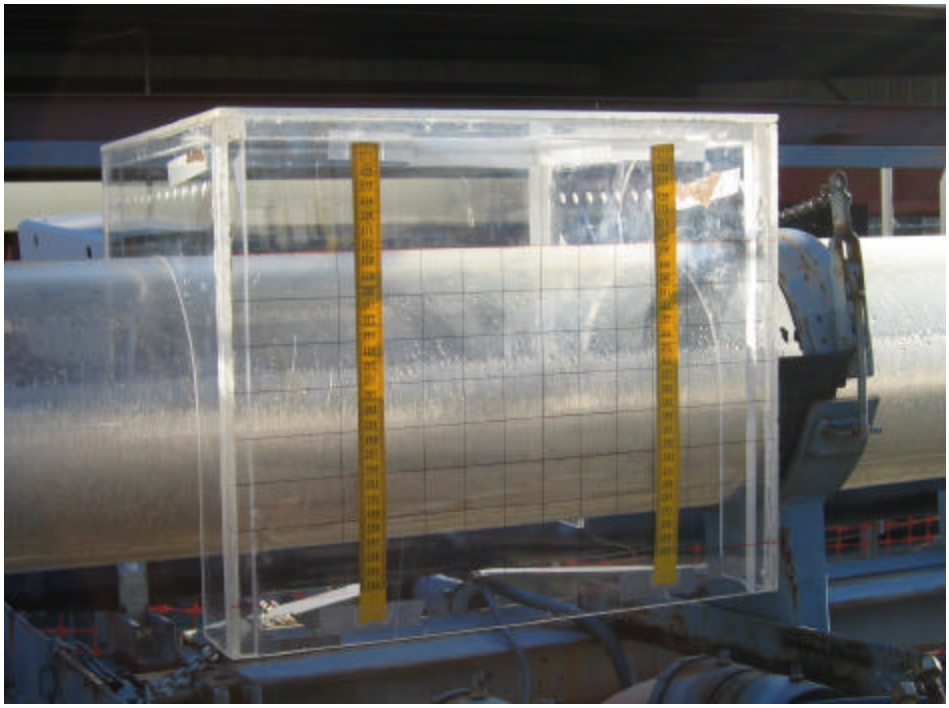

Fig. 2 - Picture of the visualization section in the low pressure loop

Drawings of the proposed modification

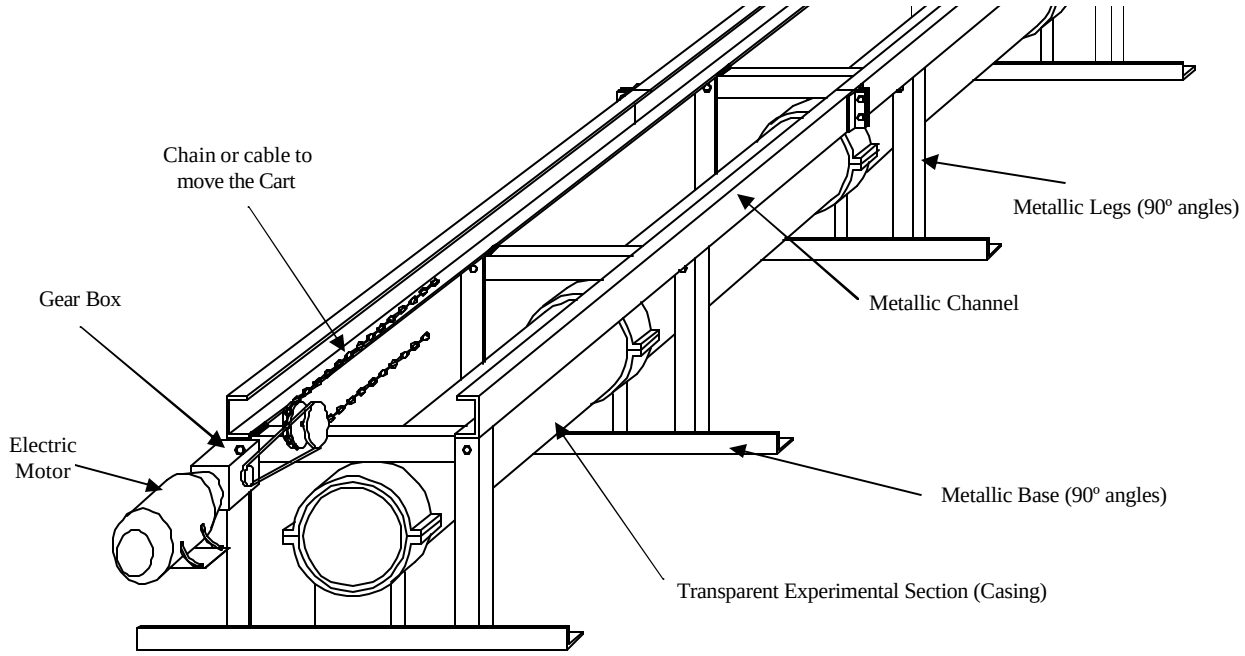

Fig. 3 - Perspective view of the loop modification

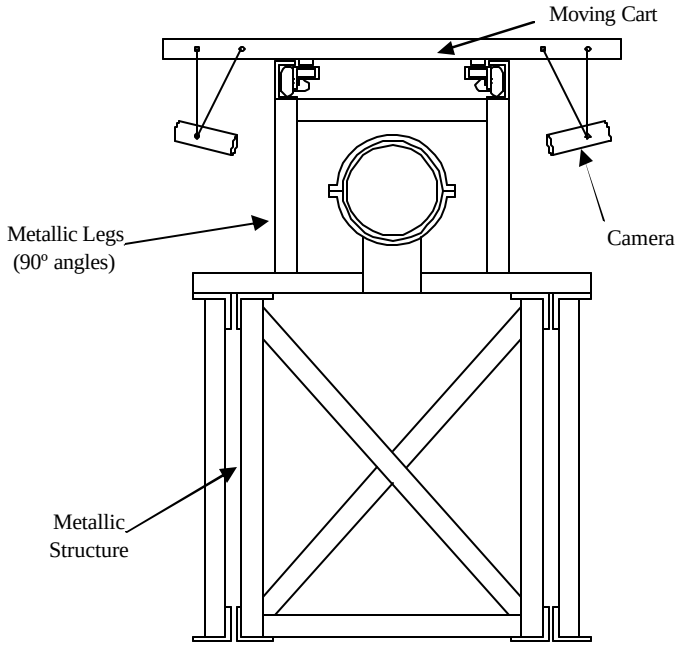

Fig. 4 - Transversal view of the loop structure

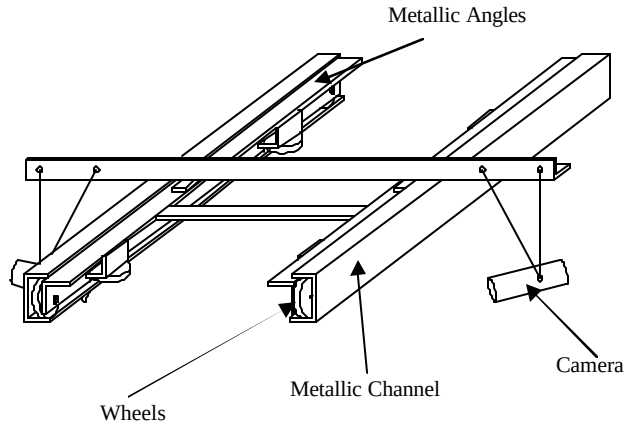

Fig. 5 - Moving Cart with the supports for the cameras on each side

Experimental Technique:

A brief description of the experimental procedure followed during the execution of the preliminary experiments is presented in the following diagram:

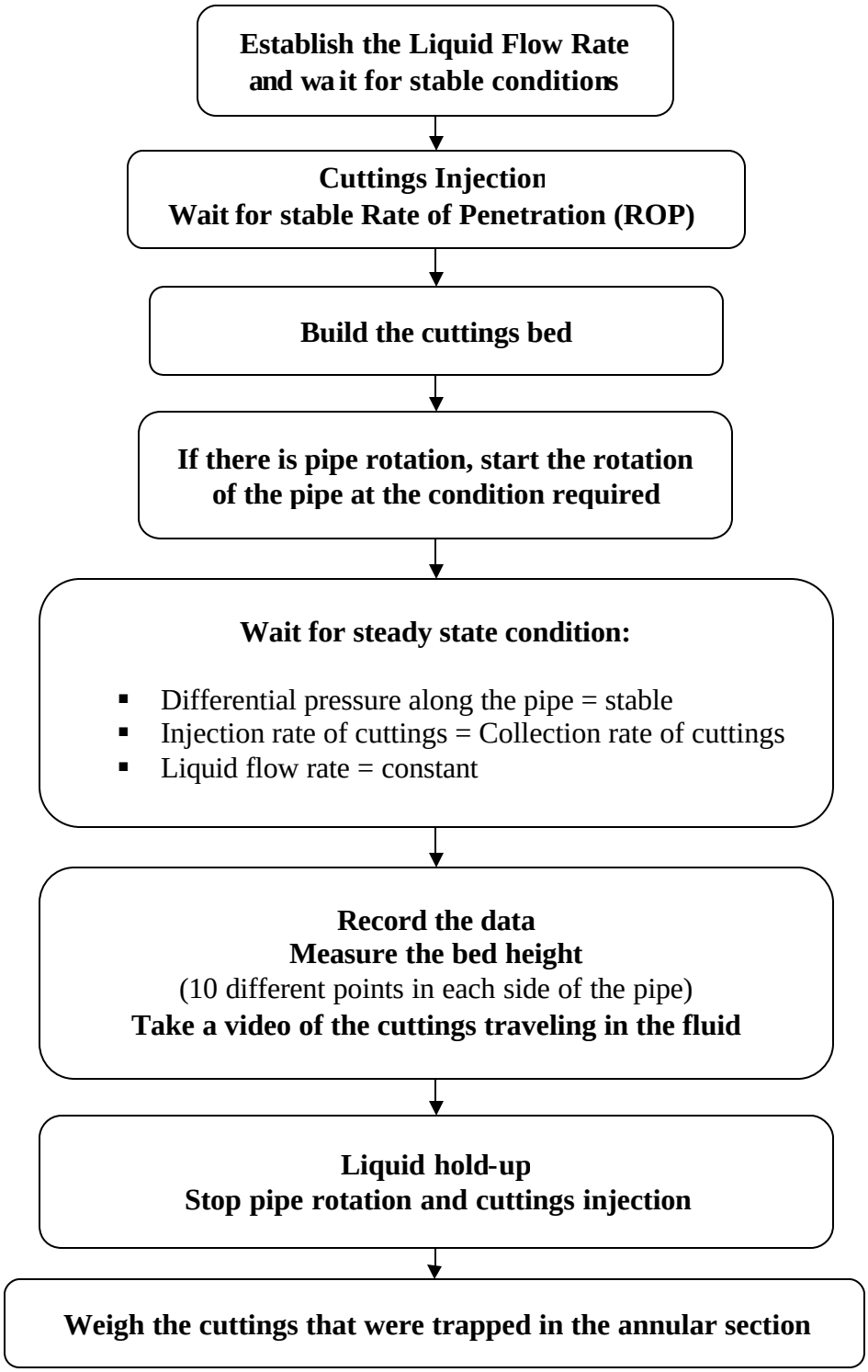

Fig. 6 – Experimental Procedure Diagram

Test matrix:

Stage	Fluid Type	Flow Rate (GPM)	Hole Angle	Pipe Rotation (RPM)
I	Water	200 300 500	70º	0 40
			90º	
II	Polymer (PAC)	200 300 500	70º	0 40
			90º	

Table 6 – Test Matrix

Notes:

- Average cuttings size 3-5mm
- Average cuttings specific gravity = 2.6 (normal gravel used in TUDRP studies)
- Estimated Number of test runs: 24+
- The above test matrix could be modified as more information is acquired during the tests
- Polymer: PAC (Poly Anionic Cellulose)

Preliminary Results and Discussions:

To determine the particles traveling velocity a video technique was used. Different video technologies were used in the developing of the experimental technique. A CCD Hitachi Camera (KP-F120), standard digital camera (Canon PC1048) and high speed camera (TSTH Troubleshooter HR) were tested to obtain the images of the particles in the traveling fluid. The best of these options was the high speed camera (HSC) because it provides high quality images at a high recording rate (1000 frames per second). With this option we were able to distinguish and track the cuttings during the process. The HSC can provide a high quality image and superior resolution of the particles. It is designed for applications such as flow visualization. We compared the results obtained using the other cameras, which do not provide the same quality of data.

This technique is still in development, but some preliminary tests were done using the HSC. Preliminary tests were conducted and they will be repeated to check for any potential problems during the experimental stage. Currently a total of three preliminary tests have been completed. The analysis of the data obtained from these tests is presented in the Results and Discussion section.

Data analysis:

Using the digital videos recorded for each data point in conjunction with a computer program that plays backward and forward we were able to manually track the cuttings. To process the data, a population of particles was tracked for each data point; then the main velocity of that population was calculated and reported. The technique used to calculate the velocity of each particle consists of determining the position "x" of a particle in consecutive recorded frames and the time between each frame, then calculating the velocity. It is important to highlight the assumptions that were made in order to simplify the problem, these assumptions are: constant particle velocity during the segment in study, linear trajectory in the "x" direction, homogeneous concentration of the particles in the annular section.

The cuttings bed height in the annulus was measured at 10 different points on each side of the transparent casing along all the length of experimental section. These measurements were used to calculate the average bed height, assuming a uniform distribution of the cuttings along the annulus. Having the average bed height, pipe eccentricity and liquid flow rate we were able to compute the liquid phase velocity in the flowing area.

In order to determine the efficiency of the experimental technique and report the quality of the test data an uncertainty model was applied for each data point and variable. In this analysis we considered random and systematic error components of the uncertainty, using U_{95} or U_{ASME} models. In addition, a propagation error for the liquid velocity and cuttings velocity was conducted in order to estimate the limits of the variables uncertainties. (See Appendix A)

The following table shows a typical case of data processing:

Particle #	Position "x" of the particle at different frame times (the coordinate "x" is expressed in pixels)									
	Frame #10	Frame #20	Frame #30	Frame #40	Frame #50	Frame #60	Frame #70	Frame #80	Frame #90	Frame #100
1	419	403	392	377	360					
2	359	346	333	316	297	281	267			
3	460	439	416	399	381	361	347	336	325	310
4	534	522	509	494	482	470	458	444	427	
5	324	295	267	239	209	179	145	116		
6	522	492	457	425	392	357	326	295	267	247
7	339	315	292	264	242	212	184	156	122	97
8	516	494	471	451	426	396	370	355	338	317
9	433	420	408	396	380	365				
10	362	338	316	293	268	243	213	186	156	126

Table 7 – Data Processing Case 1

Note:

To produce these tables different particle populations were taken in different locations of the flowing fluid. In addition, more than 500 images were analyzed for each data point in order to obtain good representative samples of the population.

The recording rate was 1000 frames per second (fps) that means that every 10 frames represent 0.01seconds; this was used to carry out the calculations.

Summary table of data processed for the cuttings velocity					
Uncertainty calculations and results		**DPixels (Average)/ 10 Frames**	**Standard Deviation**	**N(ave)=n**	**Standard deviation of the average**
		21.4	2.8	105	2.8
Pixel/mm	**Particle Velocity [mm/s]**	**Interval (+-) U_{95} (uncertainty) [mm/s]**	**Particle Velocity [m/s]**	**Interval (+-) U_{95} (uncertainty) [m/s]**	**t_{95}=**
4.80	445.8	79.3	0.446	0.0793	2

Table 8 – Cuttings Velocity Calculation

Typical images obtained during the tests are shown in the following table:

Frame # 430, X»11.4 mm	Frame # 440, X»33.1 mm	Frame # 450, X»52 mm
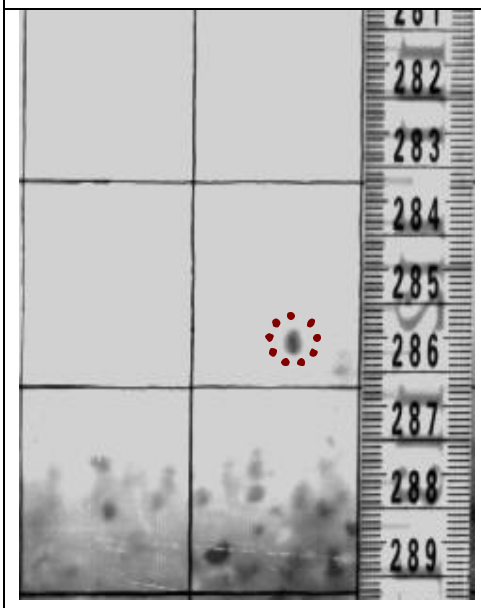	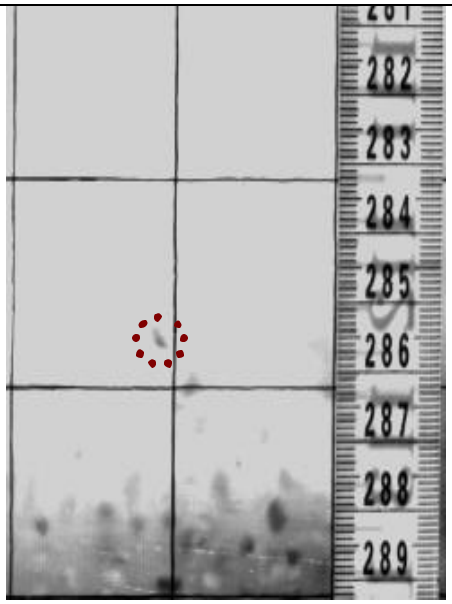	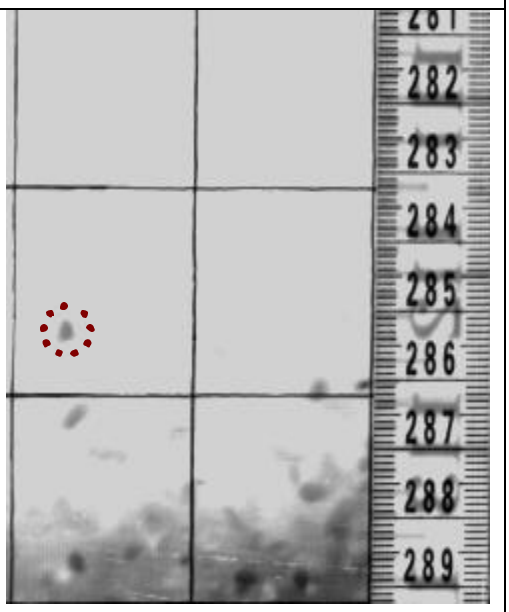

Table 9 – Images of the Cuttings Traveling in the Liquid

The following tables are show the preliminary tests completed and their results:

Tests Completed and Results

Data Point Nº	Flow Rate [GPM]	Rate of penetration (ROP) [ft/hr]	Inclination angle from the vertical [degree]	Cuttings bed height [in]	Liquid Velocity [ft/s]	Cuttings Velocity [ft/s]	Cuttings Slip Velocity [ft/s]
1	201.0±0.26	40.00±0.24	87.0±0.2	5.4±0.48	5.35±0.44	1.46±0.26	3.89±0.51
2	309.1±1.01	38.00±0.5	88.0±0.2	4.9±0.69	7.12±0.53	3.71±0.1	3.41±0.54
3	399.0±0.26	45.00±2.16	87.0±0.2	4.4±1.13	8.14±0.49	7.01±0.16	**1.13±0.5***

Table 10 - Results in Field Units

***Note**: We can observe that data point #3 has a very high value of uncertainty for the cuttings slip velocity; this is the result of propagation error of the liquid velocity and cuttings velocity. This error was unexpected because a thorough data analysis was conducted, so we determined that the error is random. In order to reduce this potential type of error in the future, we might take a larger set of data points.

Data Point Nº	Flow Rate [m^3/s]	Rate of penetration (ROP) [m/hr]	Inclination angle from the vertical [degree]	Cuttings bed height [cm]	Liquid Velocity [m/s]	Cuttings Velocity [m/s]	Cuttings Slip Velocity [m/s]
1	0.0127± 1.62E-5	12.2±0.1	87.0±0.2	13.7±1.2	1.63±0.13	0.45±0.08	1.18±0.16
2	0.0195± 6.39E-5	11.6±0.2	88.0±0.2	12.5±1.8	2.17±0.16	1.13±0.03	1.04±0.16
3	0.0252± 1.62E-5	13.7±0.7	87.0±0.2	11.2±2.9	2.48±0.0.15	2.14±0.0.05	**0.34±0.16***

Table 11 - Results in International System of Units

In order to quantify the traveling velocity and the slip velocity of the cuttings a graphic of cuttings velocity a function of the liquid velocity is presented.

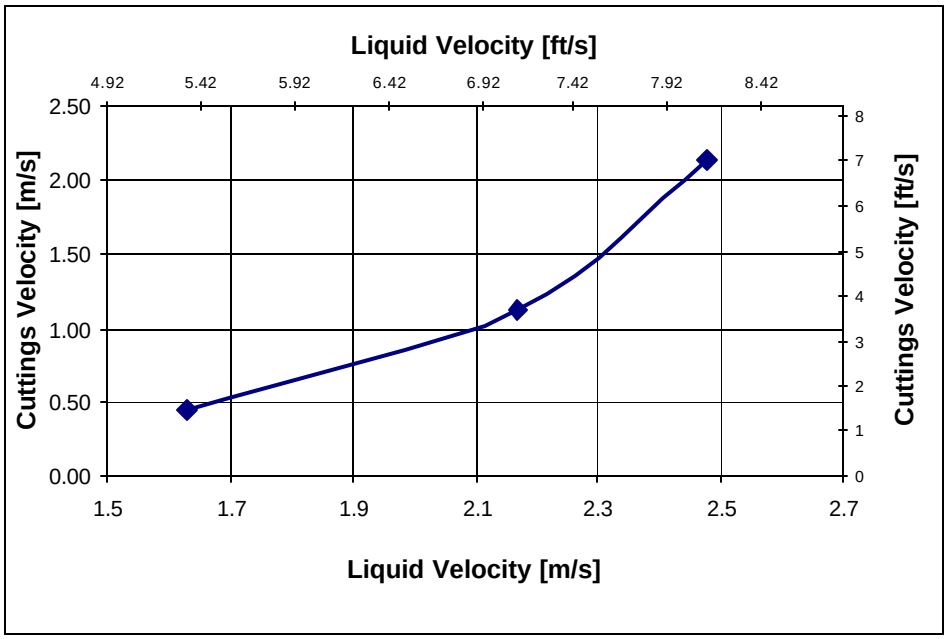

Fig. 7 - Cuttings Velocity at Different Liquid Flow Conditions
Fluid: Water, Cuttings size: 3-5 mm, Cuttings S.G.: 2.6

From Figure 7, we observe that the cuttings velocity increases with the flow rate, but this increment does not follow a linear behavior. In addition, a slip velocity between the cuttings and the fluid is observed. This slip velocity is around 73% of the liquid velocity for the first data point (200 GPM) and it decreases to 14% of the liquid velocity for the last data point (400 GPM). With these preliminary results we cannot formulate any conclusion about what is occurring in the process of cuttings transport, but they have provided us a better understanding of the phenomena, as well as, new hypotheses for the upcoming stages of the experiments.

Preliminary Modeling:

In order to produce the first lag model correlations developed by Larsen[8] and Iyoho[12] were used to compute the cuttings traveling velocity at operational drilling conditions. Using the results obtained from the correlations, the cutting transport ratio and then the cuttings source location are then calculated. Once the cuttings source location is calculated a lag diagram considering a 2-D well bore is produced.

Larsen[8] developed his correlations based on experimental data. He did more than seven hundred experiments with Newtonian and non-Newtonian fluids (Bingham Plastic fluid).These empirical correlations are believed to be field-oriented. Variables that he considered in the study include; hole angle, annular flow rate, mud rheology, drill pipe eccentricity, cuttings size, mud weight, drilling rate and rotary speed.

Iyoho[12] considered a wide variety of parameters during the experimentation stage such as: annular velocities from 1 ft/s up to 4.3 ft/s, angle of inclination varied from 0 to 90 degrees, Newtonian and non-Newtonian drilling fluids (water, bentonite-treated mud and Carbopol solution). Others parameter considered in the study were inner-pipe rotary speed, fluid flow regime, annulus eccentricity and particle injection rate (ROP).

Based on detailed theoretical and experimental analysis, Iyoho[12] came out with useful and fundamental semi-empirical correlations for inclined and eccentric annuli. Using these correlations he was able to develop a field-oriented mathematical model for characterizing and evaluating the performance of drilling muds in order to facilitate their design for effective cuttings transport. In our case we use Iyoho's[12] correlations to do the computations of the cuttings transport velocity in the inclined segment and horizontal segments.

In vertical cuttings transport, previous investigators[1,2] have utilized a "transport ratio" definition,

$$R_T = \frac{V_P}{V_{ann-liq}} = \frac{C_f}{C_v} \tag{1}$$

to evaluate and/ or characterize the effectiveness of hole cleaning by drilling muds.

Iyoho[12] used material balance considerations together with experimental data and produced a new transport function, R_{Tg}, which adequately accounts for cuttings build up on the low side of the annulus. The General Transport Function (R_{Tg}) was developed by writing the average particle velocity, including bed as $C_{VM}V_P / C_{VT}$ and dividing by nominal annular velocity. This new transport ratio function adequately accounts for cuttings in the bed while keeping the basic R_T equation developed by Sifferman et al.[1]

Transport Fluid:

$$V_{pa} = V_{ann} - V_{slip} Cosb \tag{2}$$

and

$$V_{pr} = V_{slip} Sin b \tag{3}$$

Under steady-state conditions, the material balance can be written as:

Volume of the material flowing in = Volume of the material flowing out.

$$Q_{L-in} = Q_{L-out} = Q_L \tag{4}$$

and

$$Q_{p-in} = Q_{p-out} = Q_p \tag{5}$$

If the bed is practically immobile and C_{VM} is the fractional particle concentration in motion, then

$$Q_L = V_L A_T (1 - C_{VM}) \tag{6}$$

and

$$Q_P = V_p A_T C_{VM} = \frac{\overline{ROP}}{60} \frac{p}{4} \frac{d_h^2}{144} \tag{7}$$

Where:

$\overline{ROP} = Rate\ of\ \ penetration\ [ft/h]$

$d_h = hole\ diameter\ [in]$

$Q_p = Flow\ rate\ injection\ of\ \ particles\ [ft^3/\min]$

The fractional particle feed concentration

$$C_f = \frac{Q_p}{Q_L + Q_p} \tag{8}$$

Then the feed concentration is:

$$C_{f\%} = \frac{Q_p}{Q_L + Q_p} 100 \tag{9}$$

Mud Annular Velocity is:

$$V_{ann} = \frac{9.6 Q_L}{p(d_h^2 - d_{pe}^2)} \tag{10}$$

Where:

$d_{pe} = External\ diameter\ of\ \ the\ drillpipe\ [in]$

$Q_L = Mud\ \ flow\ rate\,(liquid)\ [\,ft^3/\min]$

$V_{ann} = Mud\ \ annular\ velocity\,[\,ft/s]$

Effective Viscosity is:

$$m_e\,(cp) = \frac{1488 * K * 12^n \left(\frac{d_h - d_{pe}}{12}\right)^{1-n}}{\left(\frac{12}{32.2}\right) V_{ann}^{1-n}}$$

(11)

Where:

$K = Consistency\ index\ [lbf - s^n / ft^2]$

$n = Flow\ behavior\ index\ [-]$

$$m_{ec} = \left\{ m_e \left[\frac{25}{(r_p - r_f) d_p} \right] \right\}$$

Where:

$m_{ec} = Effective Viscosity\ with\ correction\ [cp]$

$r_p = Particle\ density\,[lbm/\ ft^3]$

$r_f = Fluid\ \ density\,[lbm/\ ft^3]$

$d_p = average\ \ particle\ diameter\ [in]$

Reynolds Number

$$N_{\mathrm{Re}} = \frac{124 r_f V_{ann} (d_h - d_{pe})}{m_{ec}} \qquad (12)$$

Predictive Models for General Transport Ratio

- Laminar Flow, β=10º

$$R_{Tg} = \frac{27.86 m_{ec}^{0.121}}{b^{0.122} C_f^{0.929}} \qquad (13)$$

For vertical flow, use β=1

- Laminar Flow, β=10º

$$R_{Tg} = \frac{87.1 m_{ec}^{0.486}}{b^{1.203} C_f^{1.221}} \qquad (14)$$

- Turbulent Flow, β=10º

$$R_{Tg} = \frac{30.85 m_{ec}^{0.75}}{b^{0.17} C_f^{1.228}} \tag{15}$$

For vertical flow, use β=1

- Turbulent Flow, β=10º

$$R_{Tg} = \frac{250.61 m_{ec}^{0..77}}{b^{0.995} C_f^{1.396}} \tag{16}$$

Restrictions Imposed on the new Transport Model

1. In all cases, $R_{Tg} \leq 100$ percent. Values of R_{Tg} may give theoretical transport efficiencies greater than 100, especially at low hole angles. In these situations, R_{Tg} should be set equal to 100 giving maximum transport performance.

2. In Eqs. 13 and 14, $C_f \leq 1.8$ percent. If the penetration rate is high and/ or the liquid rate is low, the calculated value of C_f may be greater than 1.8. Under these conditions (which will be rare in practice) C_f should be set at 1.8.

3. In Eqs. 14 and 16, restrictions (2) apply but the limiting values of C_f depend on the hole angle.

$For\ 10^o < b \leq 30^o, \quad C_f \leq 1.2$

$For\ 30^o < b \leq 50^o, \quad C_f \leq 1.0$

$For\ 50^o < b \leq 70^o, \quad C_f \leq 0.8$

$For\ 70^o < b \leq 90^o, \quad C_f \leq 0.6$

Cuttings Transport Ratio:

Rock cuttings advance toward the surface at a rate equal to the difference between the fluid velocity and the particle slip velocity. The particle velocity relative to the surface is called the transport velocity.

$$n_T = \overline{n_a} - \overline{n_{sl}} \tag{17}$$

The transport ratio is defined as the transport velocity divided by the mean annular velocity:

$$F_T = \frac{\overline{n_T}}{\overline{\overline{n_{sl}}}} = 1 - \frac{n_{sl}}{n_a} \tag{18}$$

For positive cuttings transport ratios, the cuttings will be transported to the surface. For a particle slip velocity of zero, the mean cuttings velocity is equal to the mean annular velocity and the cuttings transport ratio is unity.

Relationships between the source locations and the transport velocity:

Vertical segment	Inclined segment	Horizontal segment
$S_{DY(Vertical)} = \frac{V_{T(Vertical)} D_C}{V_{T(Vertical)} + \overline{ROP}}$	$S_{DX(Inclined)} = \frac{V_{T(Incllined)} L_I Sin(a)}{V_{T(Inclined)} + \overline{ROP}}$	$S_{DX(Horizontal)} = \frac{V_{T(Horizontal)} L_H}{V_{T(Horizontal)} + \overline{ROP}}$
	$S_{DY(Inclined)} = \frac{V_{T(Incllined)} L_I Cos(a)}{V_{T(Inclined)} + \overline{ROP}}$	

Table 12 - Relationships between the source locations and the transport velocity for all the segments.

where:

$V_L = Liquid\ Velocity$

$S_{DX(V,I,H)} = Horizontal\ coordinate\ of\ the\ cuttings\ Source$

$S_{DY(V,I,H)} = Vertical\ coordinate\ of\ the\ cuttings\ Source$

$D_C = Vertical\ Current\ Depth$

$L_I = Inclined\ section\ length$

$L_H = Horizontal\ section\ length$

$a = Well\ inclination\ angle$

$\overline{ROP} = Average\ Rate\ of\ Penetration$

$\underline{\underline{V_T = Transport\ Velocity}}$

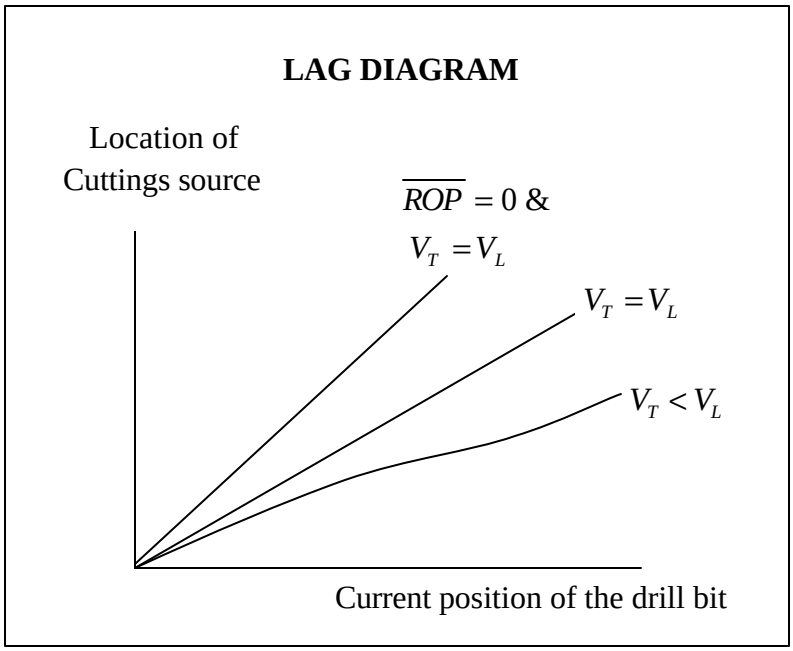

Fig. 8 – Schematic Lag Diagram

Schematic diagram of the modeling

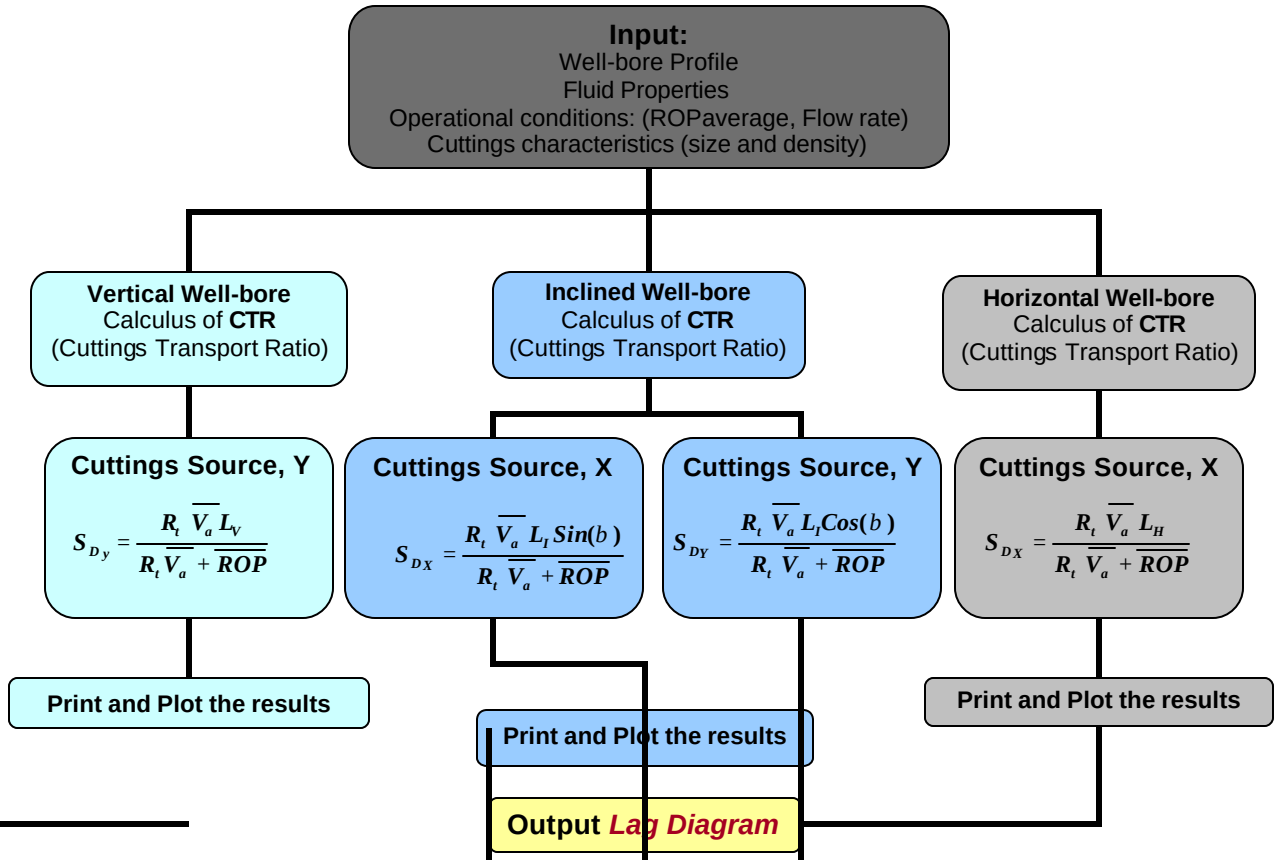

Fig. 9- Algorithm diagram

Summary:

- Different video technologies were reviewed in order to develop the experimental technique.
- Preliminary experiments were conducted using a high speed video camera.
- An uncertainty analysis was applied to the data collected.
- A modification in order to measure the bed height in the inclined position is proposed.
- Initial modeling and programming were done using available correlations and VBA.

.

Timetable:

Activity/Time	Fall 2005	Spring 2006	Summer 2006	Fall 2006	Spring 2007
Literature Review					
Development of experimental technique					
Experiments					
Modeling					
Analysis of the results					
Final Report					

Table 13 – Project execution time

Future Work:

- Build the proposed system in order to measure bed height in the inclined position.
- Improve the experimental technique and complete the test matrix.
- Introduce the drill-pipe connection time in the modeling part.
- Compare the data collected from the flow-loop with previous correlations and existing mechanistic models (Ozbayoglu[22])

References:

1. Sifferman, Drill Cuttings transport Vertical Annuli. SPE 4514, 1973.
2. Sample et al., An Experimental Evaluation of Correlations Used for Predicting Cutting Slip Velocity, SPE 6645, 1977.
3. Tomren, Iyoho & Azar, Experimental study of cuttings transport in directional Wells. SPE 12123, 1986.
4. Kelessidis & Bandelis, Flow Patterns and Minimum Suspension Velocity for Efficient Cuttings Transport in Horizontal and Deviated Wells in Coiled-tubing Drilling, paper SPE 81746 presented at the 2003 SPE/ICoTA Coiled Tubing Conference.
5. Azar & Sanchez, Important Issues in Cutting Transport for drilling Directional Wells. SPE 39020, 1997.
6. Leising &Walton, Cuttings transport Problems and Solutions in Coiled Tubing. IADC/SPE 39300, 2002.

7. Zeidler, An Experimental Analysis of the transport of drilled Particles, Rice University, Houston, Texas, 1970.
8. Larsen, A Study of the Critical Fluid Velocity in cuttings Transport for Inclined Well bores, Master thesis, University of Tulsa, Tulsa, Oklahoma, 1990.
9. Doron and Barnea, Flow Pattern Maps for Solid-Liquid Flow in Pipes. Int. J. Multiphase Flow Vol.22, Nº 2, pp 273-283, 1996.
10. Doron & Barnea, Flow of Solid-Liquid Mixtures in Inclined Pipes. Int. J. Multiphase Flow Vol. 23, Nº 2, pp 313-323, 1997.
11. Kamp and Rivero, Layer Modeling for Cuttings Transport in Highly Inclined Wellbores, paper SPE 53942 presented at SPE Latin American and Caribbean Petroleum Engineering Conference, 1999.
12. Iyoho, Drilled-Cuttings Transport by Non-Newtonian Drilling Fluids through Inclined, Eccentric Annuli, Ph. D thesis, University of Tulsa, Tulsa, Oklahoma, 1980.
13. Nguyen and Rahman, A Three-Layer Hydraulic Program for Effective Cuttings Transport and Hole Cleaning in Highly Deviated and Horizontal Wells, IADC/SPE 36383, 1996.
14. Cho et al., A Three-Segment Hydraulic Model for Cuttings Transport in Horizontal and Deviated Wells, SPE 65488, 2000.
15. Martings and Santana, Modeling and Simulation of Annular Axial Flow of Solids and Non-Newtonian Mixtures, papers presented at the III Encontro Nacional de Ciencias Termicas, Itapema, Brazil.
16. Gadde et al., Modeling Proppant Settling in Water-Fracs, SPE 89875, 2004.
17. Iyoho et al., A computer Model for Hole-Cleaning Analysis, SPE16694, 1987.
18. Chien, settling velocity of irregularly shaped particles, SPE 26121, 1992.
19. Patankar et al., Power law correlations for sediment transport in pressure driven channel flows, Int. J. Multiphase Flow 28, pp 1269-1292, 2002.
20. Joseph and Ocando, Slip velocity and lift, Department of Aerospace Engineering and Mechanics, University of Minnesota, 2001.
21. Bourgoyne A. et al., Applied Drilling Engineering SPE Textbook Series, Vol. 2, 1991, ISBN 1-55563-001-4.
22. Ozbayoglu, Cuttings Transport with Foam in Horizontal and Highly-Inclined Wellbores, Ph. D thesis, University of Tulsa, Oklahoma 2002.
23. Dieck, Measurement Uncertainty: Methods and Applications, The Instrumentation, System, and Automation Society, 2002.
24. Communication with Dr. Claudia Zettner, Exxon Mobil.

Appendix 1:

Measurement Uncertainty Model

Standard Deviation: The Elemental Random Uncertainty

$$S_{X,i} = \left\{\left[\sum \left(X_{i,k} - \overline{X}_i\right)^2 / \left(N_i - 1\right)^{1/2}\right]\right\}$$

Note: The sum is over k where there are N_i values of $X_{i,k}$.

Random Uncertainty for an Error Source

$$S_{\overline{X},i} = \left[S_{X,i} / \left(N_i\right)^{1/2}\right]$$

Where:

$S_{\overline{X},i} =$ The random uncertainty (or standard error of the mean) for error source i

$N_i =$ The number of data points averaged for the error source

Standard Deviation of the Average for the Result: The Random Uncertainty

$$S_{\overline{X},R} = \left[\sum \left(S_{\overline{X},i}\right)^2\right]^{1/2}$$

Where $S_{\overline{X},R}$ and $S_{\overline{X},i}$ have the same units.

Symmetrical Systematic Uncertainty for the Test Result

$$B_R / 2 = \left[\sum \left(b_i / 2\right)^2\right]^{1/2}$$

Where B_R is the systematic uncertainty of the results and where B_R and b_i have the same units.

U_{95} and U_{ASME} Uncertainty Models

The U_{95} model is: $U_{95} = \pm 2.00\left[\left(B_R / 2\right)^2 + \left(S_{\overline{X},R}\right)^2\right]^{1/2}$

This model provides 95% confidence under a wide variety of conditions and is the recommended model for uncertainty calculations. This is the case because the "2.00" in front of the equation is the Student's **t** for 30+ degrees of freedom and 95% of confidence. This simple model may also be altered to other confidences by using the U_{ASME} model: $U_{ASME} = \pm t_{95}\left[\left(B_R / 2\right)^2 + \left(S_{\overline{X},R}\right)^2\right]^{1/2}$. Here is no assumption of the degrees of freedom being 30 or higher, and an individual Student's **t** is calculated for each uncertainty statement.

Uncertainty (Error) Propagation

The Taylor Series for propagating the effects of the uncertainty in X and Y on the result R for independent sources is:

$$(U_R)^2 = (\partial R/\partial X)^2 (U_X)^2 + (\partial R/\partial Y)^2 (U_Y)^2$$

Where:

U_R = an uncertainty in the result, either systematic or random

U_X = an uncertainty in the measured parameter, X, either systematic or random

U_Y = an uncertainty in the measured parameter, Y, either systematic or random

$\partial R/\partial X =$ the influence coefficient that express as the influence an uncertainty in X will have on result R at level X_i, (θ_X, alternate notation)

$\partial R/\partial Y =$ the influence coefficient that express as the influence an uncertainty in Y will have on result R at level Y_i, (θ_Y, alternate notation)

The general expression for *N* uncertainty source is:

$$(U_R)^2 = \sum_{i=1}^{N} \left[(\partial R/\partial V_i)^2 (U_i)^2 \right]$$

Where:

V_i = the ith measured parameter or variable

U_i = the uncertainty (systematic or random) associated with the ith parameter

The following table presents the results of the uncertainty analysis for the first data point:

Uncertainty Source	Units	Nominal Level	Systematic Uncertainty (B_R)	Random Uncertainty (S_{XR})	Number of Points (N)	U_{95} ±
Flow Rate	GPM	201	0.16	0.1	2600	0.26
Rate of Penetration	ft/hr	40	0.02	0.12	2600	0.24
Inclination Angle from the vertical	degrees	87	0.1	0	2600	0.2
Cuttings Bed Height	inches	5.4	0.079	0.2	10	0.48
Liquid Velocity	ft/s	5.35	-0.01	-0.22	2600	0.44
Cuttings Velocity	ft/s	1.46	0.09	0.09	105	0.26
Cuttings Slip Velocity	ft/s	3.89	0.092	0.24	105	0.51
Note that Uncertainty = $U_{95} = \pm t_{95}[(B_R/2)^2 + (S_{X,R})^2]$, If $\nu \geq 30$ then $t_{95}=2.0$, $\nu=10 \Rightarrow t_{95}=2.228$						