Technologies Under Development:

"Design and Development of Gas-Liquid Cylindrical Cyclone Compact Separators for Three-Phase Flow"

Paper presented at:

1999 Oil and Gas Conference – Technology Options for Producers' Survival

June 28-30, 1999, Dallas, TX

Co-Sponsored by DOE and PTTC

by

Ram S. Mohan, Ph.D., Assistant Professor of Mechanical Engineering and
Ovadia Shoham, Ph.D., Professor of Petroleum Engineering
The University of Tulsa
600 South College Avenue
Tulsa, Oklahoma 74104-3189
Phone: (918) 631-2075
Email: Ram-Mohan@utulsa.edu

THE UNIVERSITY of TULSA

June 1999

Design and Development of Gas-Liquid Cylindrical Cyclone Compact Separators for Three-Phase Flow

Ram S. Mohan, Ph.D. (Ram-Mohan@utulsa.edu, 918-631-2075)
Ovadia Shoham, Ph.D. (os@utulsa.edu, 918-631-3255)
Tulsa University Separation Technology Projects (TUSTP)
The University of Tulsa
600 South College Avenue
Tulsa, Oklahoma 74104-3189

BACKGROUND

Multiphase separation technology has advanced slowly and incrementally for several years. A new look and infusion of novel ideas and concepts are now needed to develop breakthrough technologies in this area for the 21st century. In the past, the petroleum industry has relied mainly on the conventional vessel-type separator, which is bulky, heavy and expensive, to process wellhead production of oil-water-gas flow. Economic and operational pressures continue to force the petroleum industry to seek less expensive and more efficient separation alternatives in the form of compact separators, such as the gas liquid cylindrical cyclone (GLCC©). The compact dimensions, smaller footprint and lower weight of the GLCC has a potential for cost savings to the industry, especially in offshore applications. Also, the GLCC reduces the inventory of hydrocarbons significantly, which is critical for environmental and safety considerations.

A lack of understanding of the complex multiphase hydrodynamic flow behavior in the GLCC inhibits complete confidence in its design and necessitates additional research and development. Most of the studies on compact separators have been carried out for simple gas/liquid flows, usually utilizing air and water. There has been considerable progress, recently, in the research conducted in this area under the leadership of the Tulsa University Separation Technology Projects (TUSTP), mainly for two-phase separation in the GLCC. The significance of the research conducted by TUSTP has been highly appreciated by the industry, as shown by their continuing support to the consortium. TUSTP research team provides expertise in several essential areas, such as multiphase flow measurement and instrumentation, mathematical modeling, fluid mechanics, computational fluid dynamics, process control and high pressure field applications. Due to the much needed interdisciplinary nature of the research team, no other industry/university research consortium exists in the area of compact multiphase separation technology at the present time.

The objective of the proposed project is to expand the research activities of TUSTP to multiphase oil/water/gas separation. This project will be executed in two phases. Phase I (1997 - 2000) will focus on the investigations of the complex multiphase hydrodynamic flow behavior in a three-phase GLCC. The activities of this phase will include the development of a mechanistic model, a computational fluid dynamics (CFD) simulator, and detailed experimentation on the three-phase GLCC. The experimental and CFD simulation results will be suitably integrated with the mechanistic model. In Phase II (2000 - 2002), the developed GLCC separator will be tested under high pressure and real crudes conditions. This is crucial for validating the GLCC design for field application and facilitating easy and rapid technology deployment. Design criteria for industrial applications will be developed based on these results

and will be incorporated into the mechanistic model by TUSTP. These essential ingredients will ensure the development of the state-of-the-art technology in compact separation technology for the 21st century.

INTRODUCTION

For many years, the Petroleum Industry has relied mainly on the conventional vessel-type separators. They are bulky, heavy and expensive in capital, installation and operation. Due to economic and operational pressures, the petroleum industry has recently shown interest in the development of innovative alternatives to the conventional separators. One such alternative is the Gas-liquid Cylindrical Cyclone (GLCC). Unlike the conventional vessel type separators, the GLCC is simple, compact, low weight, low-cost, requires little maintenance, and is easy to install and operate. It is therefore gaining popularity as an easy-to-operate economically attractive, alternative to the conventional separator. The development ranking of the various separation technology alternatives are shown schematically in Fig. 1. As shown in this figure, conventional vessel-type separators have reached their maturity, except for some minor improvements that are being incorporated, such as new developments of internal devices and control systems. Large diameter vertical cyclones and hydro-cyclones have also been used by the industry for some time. However, recent trends in development are focused towards new type of compact separators such as the GLCC.

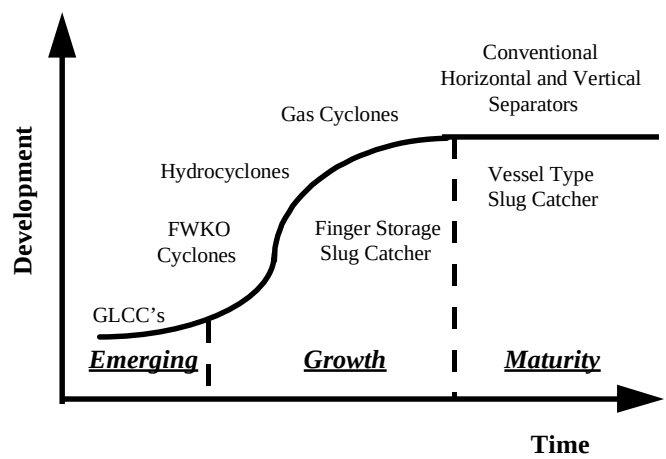

Fig. 1 - 'S' Curve for Developmental Ranking of Separation Technology

A schematic of the GLCC separator is shown in Fig. 2. It is a vertically installed pipe mounted with a downward inclined tangential inlet, with outlets provided at the top and bottom of the pipe. It has neither moving parts nor internal devices. Due to the tangential inlet, the flow forms a swirling motion producing centrifugal forces. The two phases of the incoming mixture are separated due to centrifugal and gravity forces. The liquid is forced radially towards the walls of the cylinder and is collected from the bottom, while the gas moves to the center of the cyclone and is taken out from the top. Currently, the GLCC finds its potential applications as a gas knockout system upstream of production equipment. Through the control of Gas Liquid Ratio (GLR), it enhances the performance of multiphase meters, multiphase flow pumps, and de-sanders. Other applications are portable well testing equipment, flare gas scrubbers, and slug

catchers. The GLCC is also being considered for down hole separation, primary surface separation (onshore and offshore) and sub sea separation.

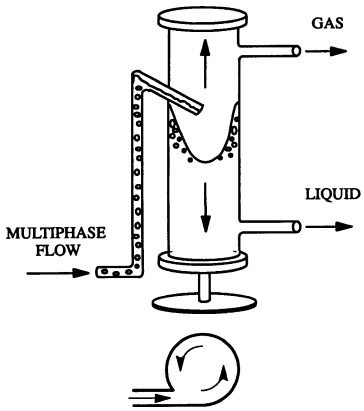

Fig. 2 - Gas-Liquid Cylindrical Cyclone Configuration

GLCC's that have already been installed and put to use in the field have successfully demonstrated their applicability as two-phase separators. The concept is bound to have a pronounced impact on the petroleum industry. However, a lack of understanding of the complex, multiphase, hydrodynamic flow behavior inside the GLCC inhibits complete confidence in the GLCC design and necessitates additional research and development. Knowledge of the hydrodynamic behavior would enable GLCC users to correctly predict the performance of the GLCC and to carry out appropriate design for all configurations and applications.

Most of the studies on compact separators have been carried out for simple gas/liquid flows, usually utilizing air and water. The fluid system existing in the industry is much more complicated with oil/water/gas three-phase flow. In this project, we propose to develop compact separators for oil/water/gas flow and conduct detailed investigations of the three-phase flow behavior. Initially, oil/water two-phase flow will be studied, utilizing a non emulsifying oil to avoid emulsions and dispersions. By all means, this will not be a trivial extension of gas/liquid flow due to the close densities of the two liquids, water and oil. Later, the gas phase will be added to investigate whether compact separators will be effective as a water knockout device to remove the majority of the free water from multiphase mixtures.

OBJECTIVES

The overall objective of this five-year project (October, 1997 – September, 2002) is to expand the state-of-the art of compact separation technology research from two-phase (gas-liquid) flow separation to multiphase oil/water/gas flow production systems. The research aims at making compact separators predictable, reliable and a viable economical alternative to conventional vessel type separators. Long-term cooperation with petroleum industry is envisaged in conducting this project to better understand, analyze and design compact separators for field application, and facilitate easy and rapid technology deployment.

PROJECT DESCRIPTION

This project will be executed in two phases. Phase I (1997 - 2000) will focus on the investigations of the complex multiphase hydrodynamic flow behavior in a three-phase GLCC© separator. The activities of this phase will include the development of a mechanistic model, a computational fluid dynamics (CFD) simulator, and detailed experimentation on the three-phase GLCC©. The experimental and CFD simulation results will be suitably integrated with the mechanistic model. In Phase II (2000 - 2002), the developed GLCC© separator will be tested under high pressure and real crudes conditions. Design criteria for industrial applications will be developed based on these results and will be incorporated into the mechanistic model.

Major Project Milestones:

- Initial modeling, design, fabrication and preliminary data acquisition (Year 1)
- Gas carry-under measurements, model refinement and design improvement (Year 2)
- Liquid carry-over measurements, model refinement and design improvement (Year 3)
- High-pressure field pilot plant GLCC© design (Year 4)
- High-pressure data acquisition and field design guidelines (Year 5)
- Interim and final reports preparation (ongoing).

PROJECT STATUS

This report presents a brief overview of the activities and tasks accomplished during Year 1 of the project (budget period, October 1, 1997 – September 30, 1998). The total tasks of the budget period are given initially, followed by the technical and scientific results achieved till date. The report concludes with a detailed description of the plans for the conduct of the project for the upcoming budget period (October 1, 1998 – September 30, 1999).

Tasks of the Current Budget Period (Oct. 1, 1997 – Sept. 31, 1998)

Objective - Initial Modeling and Data Acquisition:

a. Initial development of the mechanistic model for three-phase separation.
b. Design and expansion of two-phase test facility for three-phase loop.
c. Preliminary experimental data acquisition of global separation efficiency.
d. Preliminary simulation of three-phase flow using CFX code.
e. Interim reports preparation.

As a part of the tasks identified for the current budget period, the following specific activities have been completed:

1. Plans for detailed experimental investigations for GLCC© control are in progress. Preliminary data acquisition is in progress for control strategy formulation. The experimental investigations are being conducted in the out-door experimental facility using a dedicated GLCC© capable of withstanding higher pressures. The newly fabricated GLCC© with state-of-the-art control valves and new data acquisition system have already been installed. This GLCC© has a new aluminum inlet, designed for high-pressure (200-psi) conditions, with sector/slot plate configuration.

2. Identified a new indoor project location for the experimental facility for three-phase flow in the North Campus of The University of Tulsa and allocated the area. Updated the

preliminary floor layout drawing to scale of the three-phase flow loop consisting of the three-phase separator, oil and water tanks, metering section, test section and, related valves and fittings. Construction of the three-phase flow loop is in progress and expected to be completed by November-December, 1998.

3. Started development activities to identify strategies for mechanistic modeling for multiphase flow behavior in GLCC©. Literature review in progress to identify the issues related to behavior of oil-in-water and water-in-oil dispersions. Several oil/water-mixing strategies formulated based on Computational Fluid Dynamics (CFD) simulation studies. Investigation in progress to identify techniques for integration of GLCC©s with hydrocyclones for building three-phase compact separation systems. This is very critical for elevating the compact separation technology from bulk separation to fine separation of three-phase flow.

4. Several items for the flow loop partially received. Procurement of components needed for the flow loop such as pipes and fittings, gate valves, pumps, and control valves is completed. Three-phase separator, oil and water tanks, two sets of centrifugal pumps for oil and water, flexible piping and the upstream metering section have been installed. Fabrication of the flow loop, support structure for the experimental facility, test GLCCs and downstream metering section are underway.

5. Designated four graduate students to perform the research and experiments. One more student is expected to join in Spring '99.

It is essential to develop an appropriate control strategy for proper operation of a three-phase GLCC. Hence initial experimental investigations are planned for evaluating the GLCC control system performance for different possible control strategies. The layout of the experimental facility for conducting the controls experiments is given in Fig. 3. Construction of the dedicated GLCC for controls investigation is completed in the existing outdoor GLCC flow loop and the experiments are in progress.

A schematic of the floor layout of the three-phase flow loop consisting of the metering and test section are shown in Figs. 4 and 5. Air is supplied from a compressor and is stored in a high-pressure gas tank. The air flows through a metering section consisting of micro-motion mass flow meter and control valves. The liquid phases (water and oil) are pumped from the respective storage tanks and are metered with two sets of micro-motion mass flow meters and control valves, before being mixed. Several mixing sections have been designed to evaluate and control the oil-water mixing characteristics at the inlet. The liquid and gas phases are then mixed at a tee junction and sent to the test section. State-of-the-art micromotion net oil computers (NOC) will be used to quantify the watercut, GOR, and mixture density. The test section consists of 2 dual stage GLCCs. Initially the test section will be equipped with one dual stage GLCC and later it will be upgraded to 2 dual stage GLCCs. The three-phases from the GLCC outlets will also metered using micro-motion mass flow meters. The test section construction will be modular so that in place of GLCC any other separators such as hydro-cyclones could be used in series to form compact separation systems.

Investigations have been initiated in collaboration with the TUSTP member companies and other universities such as Michigan State University to formulate mechanistic models for integrated compact separation systems. Control valves placed along the flow loop control the flow into and out of the test sections. The flow loop is also equipped with several temperature

sensors and pressure transducers for measurement of the in-situ pressure and temperature conditions. Installation of the data acquisition system will follow as soon as the construction of the flow loop is completed. A schematic of the typical data acquisition system for the flow loop is shown in Fig. 6.

Three types of GLCC configurations will be considered for single stage GLCC and dual stage GLCC as shown in Fig. 7. The above flow loop can be used for both configurations. These two types of configurations will aid in investigating the function of GLCC as a bulk separator and a full separator. Non-emulsifying oil will be used as the experimental fluid. Flow runs will be conducted initially by using oil-water two-phase and gas will be added as the third phase later. Two types of oil-water interface are possible as shown in Fig. 8. Initial investigation will focus on identifying the nature of oil-water interface and formulation of appropriate separation strategies for the GLCC. Several literature have been identified to provide more information into the nature of the oil-water interface for cyclonic separators of low G-forces such as the GLCCs.

As an essential component of the mechanistic model development for three-phase flow, preliminary Computational Fluid Dynamic simulations have been conducted to investigate the oil-water separation in a two-phase liquid-liquid mixture with water (denser liquid) as the medium. The results of CFD flow-simulation studies using the computer code CFX 4.1 are shown in Fig. 9 for three different oil droplet sizes. The simulation time was 20 seconds, the oil specific gravity was 0.885, and the GLCC lower part length and diameter were 4-ft and 3-inches respectively. The magnitudes of radial, axial and tangential velocity components are also given in Fig. 9, which is typical of normal GLCC operating conditions. The simulation results of the droplet trajectory indicate that, it is much easier to separate oil droplets of diameters 1000 micron (1mm) and above from the denser water medium. It is also observed that at diameters of 100 microns and below there is a much higher probability of oil particle carry-under into the water stream. This is a very significant initial result as it gives a basis for oil droplet monitoring, predicting the oil carry-under and developing strategies for ensuring separation efficiency of three-phase separators. Detailed investigations are planned in the second project year (October, 1998 – September, 1999) to conduct simulation studies for other operating conditions, namely different flow velocities, different fluid densities, and also verification with experimental results.

Tasks of the Second Project Year Activities (Oct. 1, 1998 - Sep. 31, 1999)

Objective - Gas Carry-under and Model Refinement:

a. Measurement of the operational envelope of the GLCC for gas carry-under.
b. Detailed measurement of gas carry-under beyond the operational envelope.
c. Development of constitutive models for CFD code for simulation of gas carry-under.
d. Refinement of mechanistic model for gas carry-under.
e. Investigation of three-phase separator configurations and verification with experimental results.
f. Interim reports preparation.

Contract Information: Grant No.: DE-FG26-97BC15024, Project Period: 10/1/97 to 09/30/02, Recipient Project Director: Dr. Ram S. Mohan, The University of Tulsa, Ph: 918-631-2075, Fax: 918-631-2397, Email: Ram-Mohan@utulsa.edu.

Acknowledgement: The authors wish to acknowledge the Federal Energy Technology Center (FETC), U.S. Department of Energy for the above grant and specifically the DOE Project Officers, Ms. Rhonda P. Lindsey and Mr. James L. Barnes at the National Petroleum Technology Office (NPTO), Tulsa. This report is prepared for the project period 10/1/97 to 09/30/98.

Note: GLCC© - Gas-Liquid Cylindrical Cyclone - copyright, The University of Tulsa, 1994.

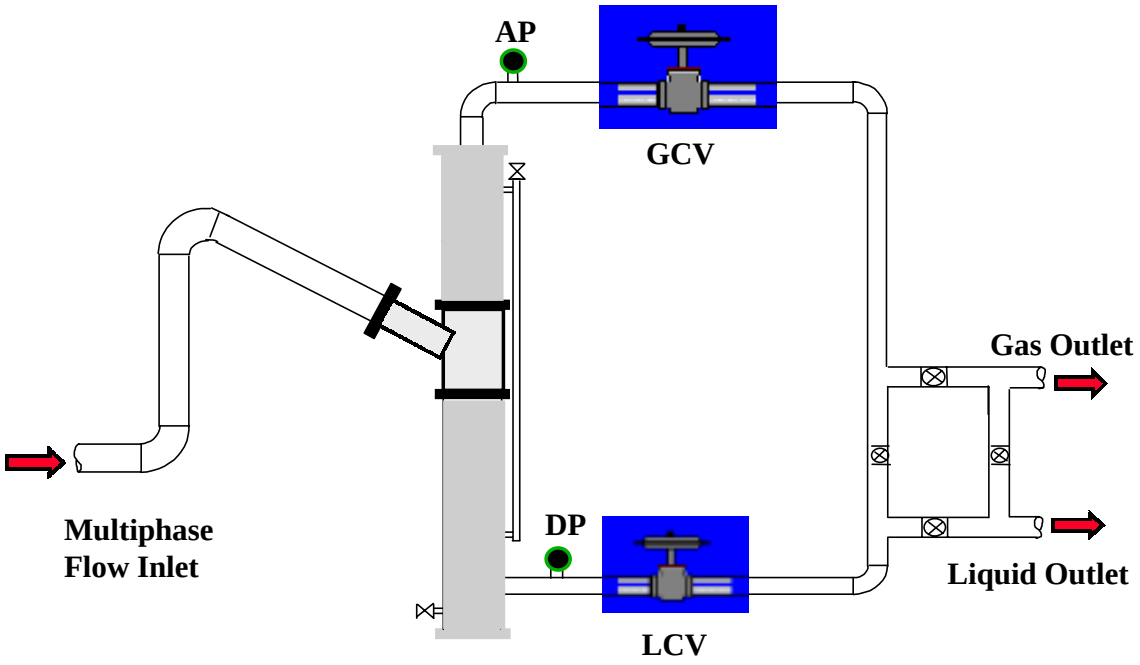

Fig. 3. GLCC Experimental Facility for Controls Experiment

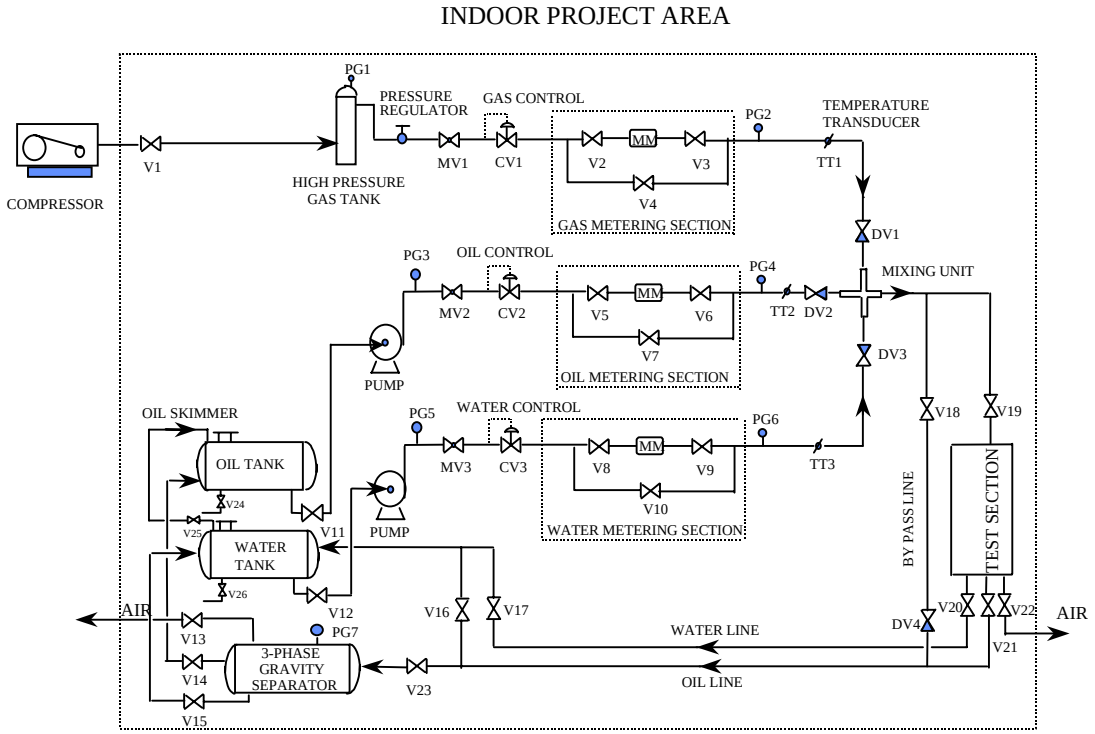

Fig.4. Three-Phase Experimental Flow Loop

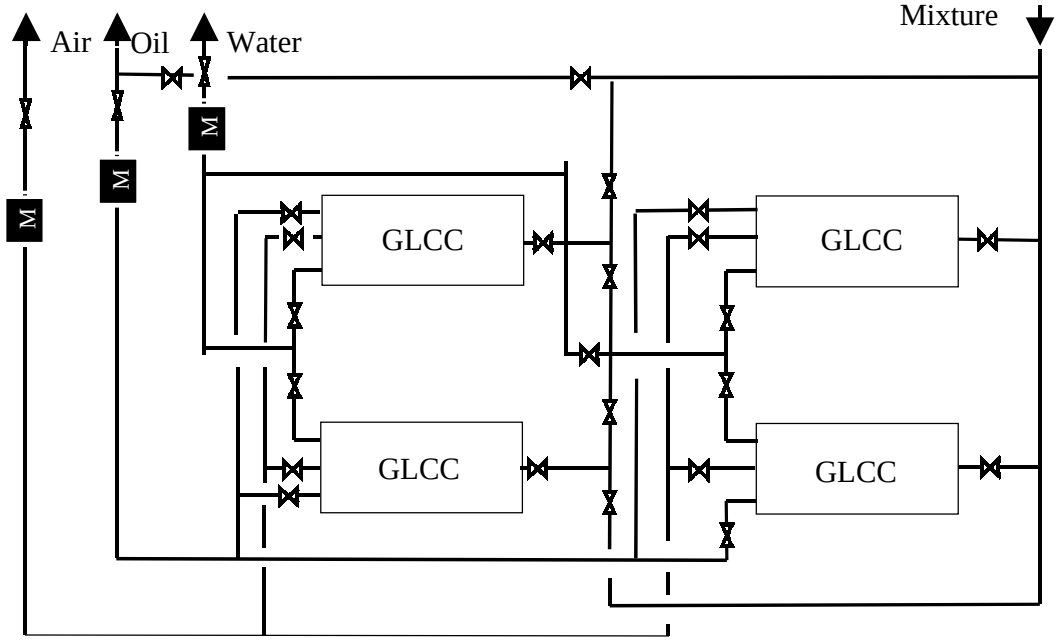

Fig. 5. GLCC Test Section

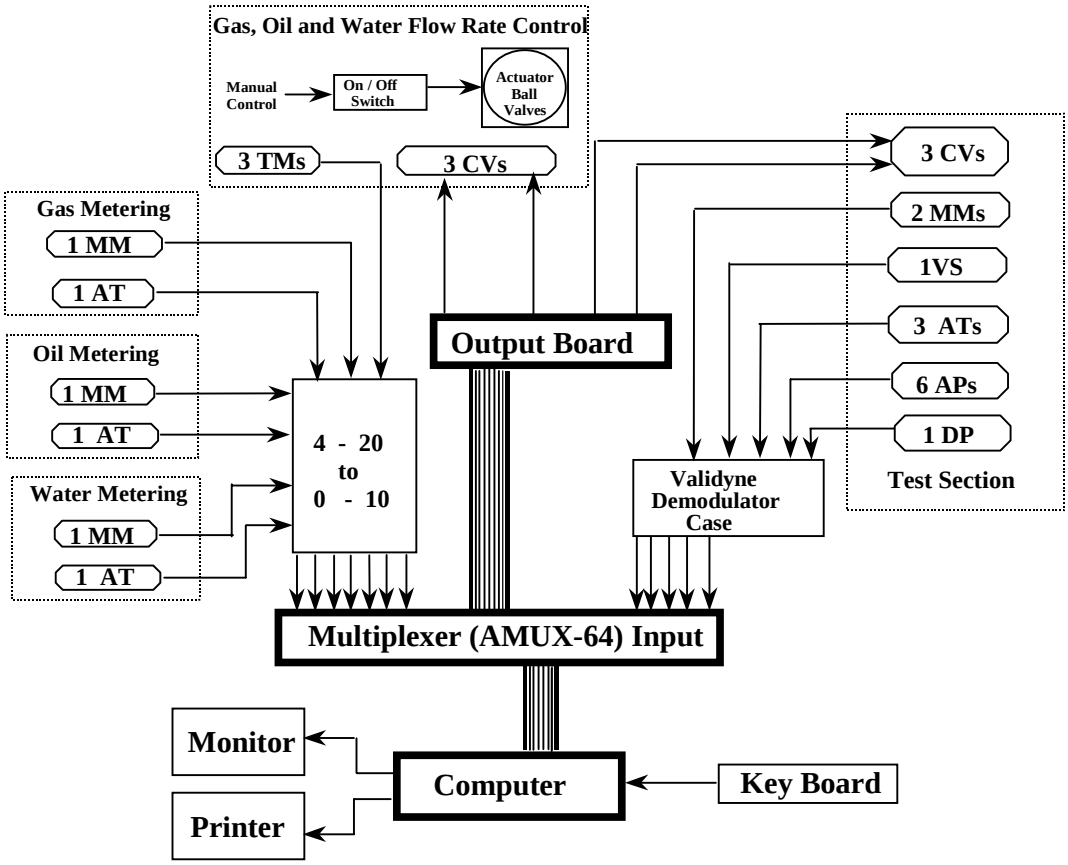

Fig.6 Instrumentation and Data Acquisition Flow Chart (3-PHASE)

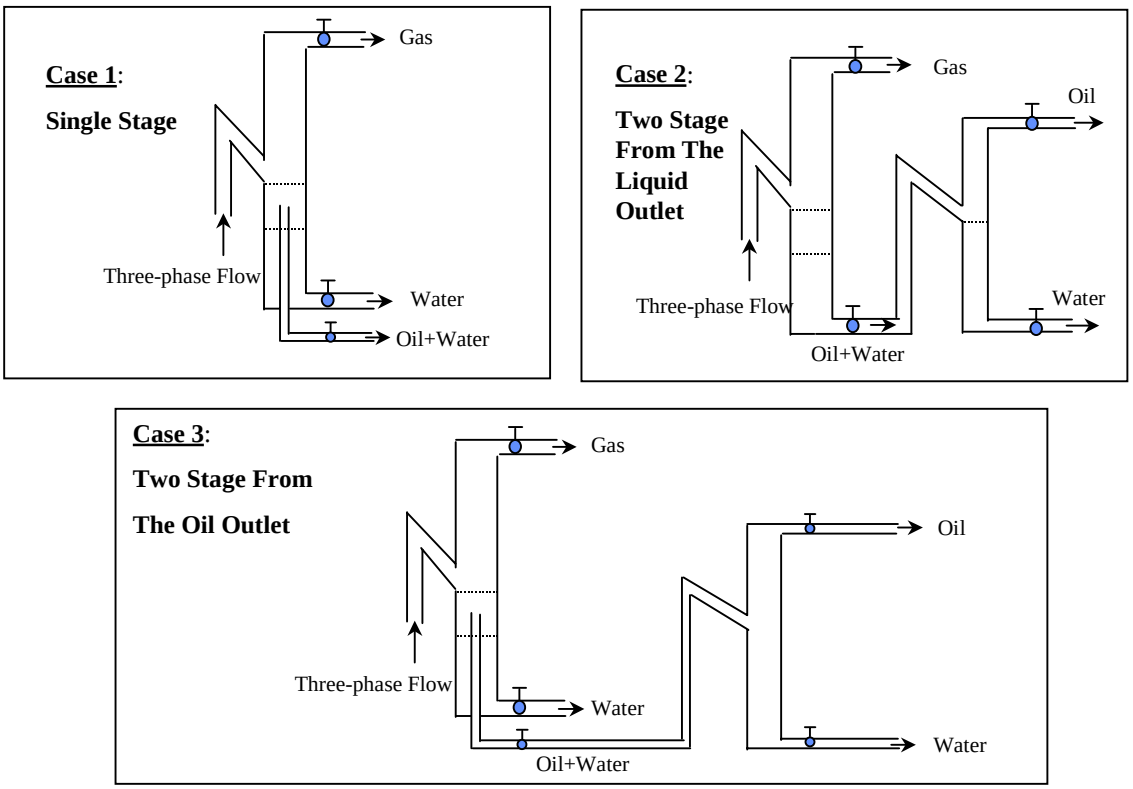

Fig. 7 Test section configurations (separated outlets)

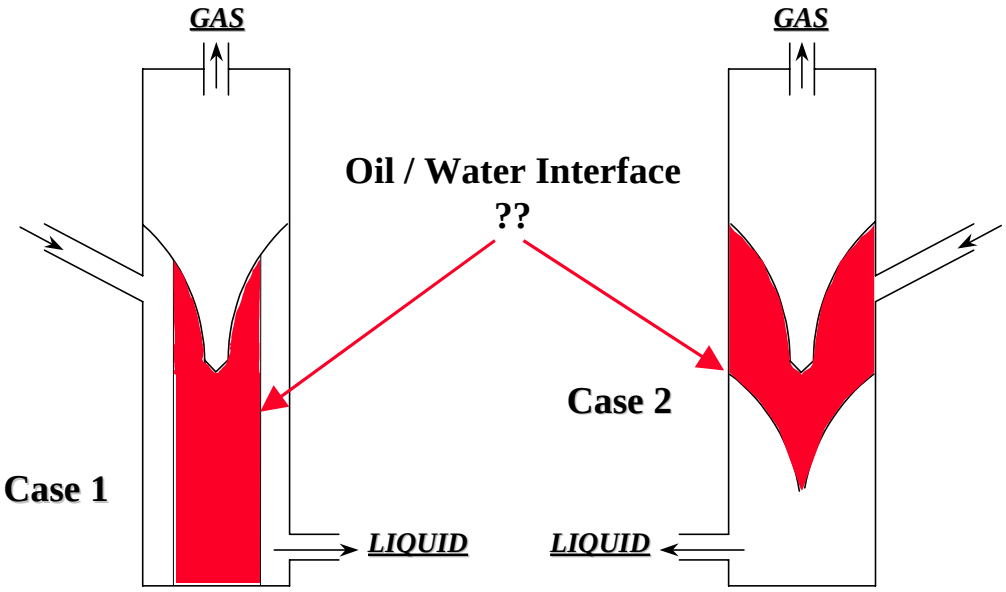

Fig. 8 Oil/Water Interface

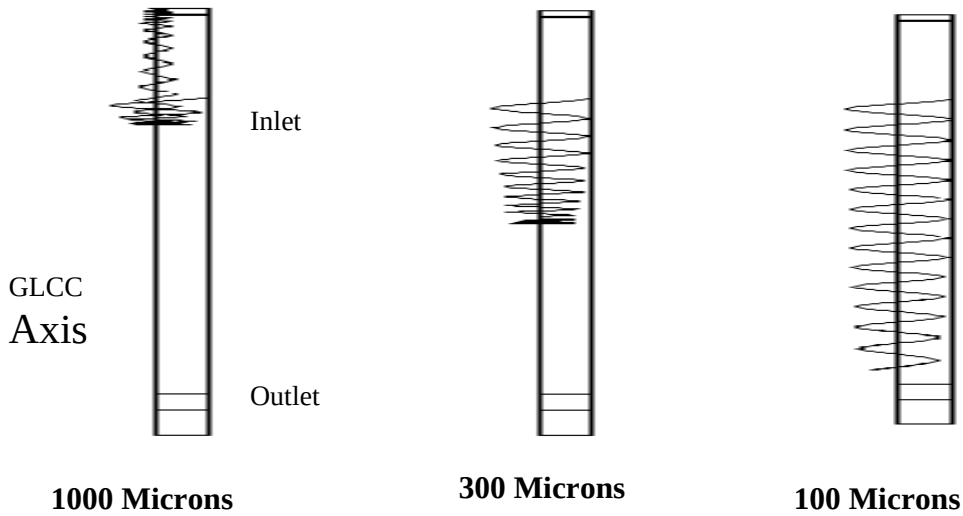

Simulation Time : 20 seconds, **GLCC diameter:** 3 inches,
GLCC Lower length: 4 Ft, **Radial Velocity:** 0.18 m/s,
Axial Velocity: 0.75 m/s, **Tangential Velocity:** 1.66 m/s,
Oil Density: 885 Kg/m^3,

Fig. 9 Preliminary Droplet Trajectory Analysis

1999 Oil & Gas Conference

Design and Development of Gas-Liquid Cylindrical Cyclone Compact Separators for Three-Phase Flow

by

Ram S. Mohan and Ovadia Shoham

The University of Tulsa

June 28-30, 1999

Introduction

- Past Studies on Compact GLCC© Separators Have Been Carried Out for Two-Phase Gas/Liquid flow
- Partial or Full Separation of Gas and Liquid Successfully Demonstrated by the GLCC©
- Extension of GLCC© Capabilities for Oil/Water/Gas Three-Phase Separation.
- Feasibility for Bulk Separation of Water and Oil Phases.

Objective

- Study Oil/Water/Gas Three-Phase GLCC Compact Separators:
  - Design and Construct Three-Phase Flow Loop
  - Acquire Experimental Data
  - Develop a Mechanistic Model
  - Test at High Pressure and Real Crude Field Conditions
- GLCC as Bulk Separator?

Project Scope and Schedule - Phase I

- October 1997 - September 2000 at The University of Tulsa (TU)
- Design and Construct Three-Phase GLCC Loop
- Acquire Experimental Data on Oil-Water Separation Efficiency
- Conduct CFD Simulation and Develop Mechanistic Model
- Develop User Friendly Computer Code for Design

Project Scope and Schedule - Phase II

- **October 2000 - September 2002 at TU and Texas A&M**
  - **Test New GLCC Under High Pressure, and Real Crudes - Texas A&M**
  - **Modify Mechanistic Model, Design Criteria and Computer Code - TU**

Experimental Program

- Experimental Facility
  - Metering and Mixing Section
  - Test Section
- Three-Phase GLCC Design

Metering and Mixing Section

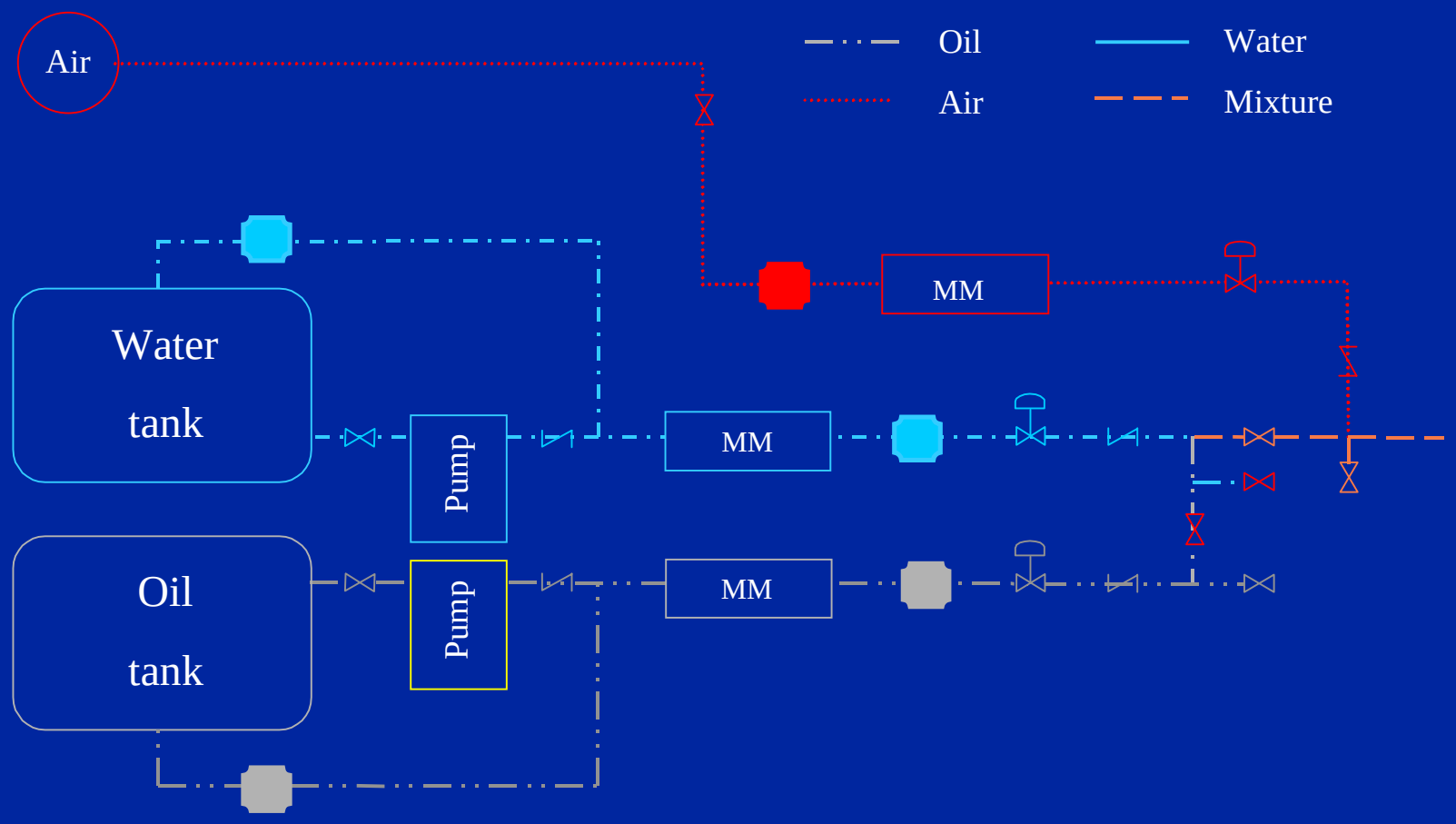

GLCC Test Section

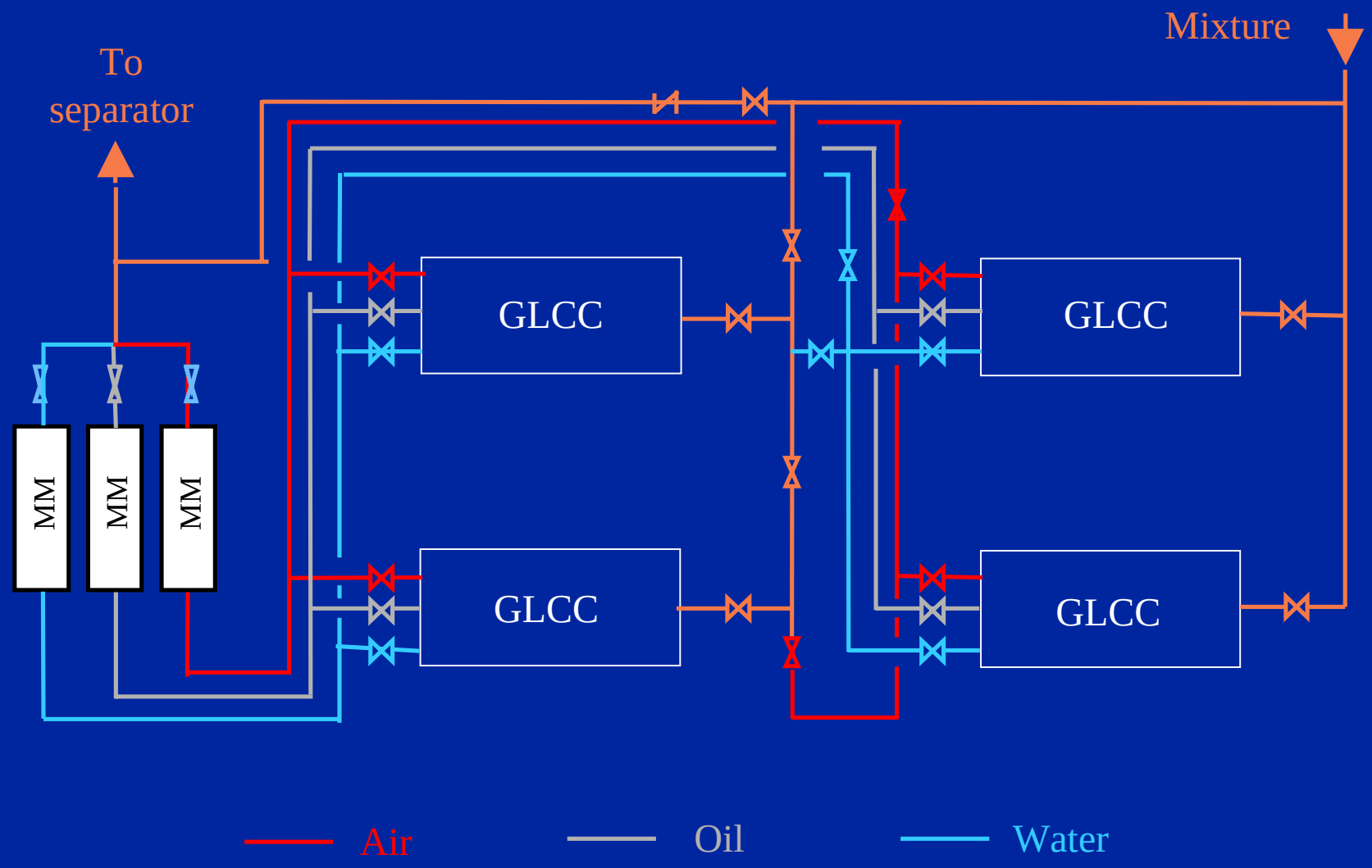

Data Acquisition System

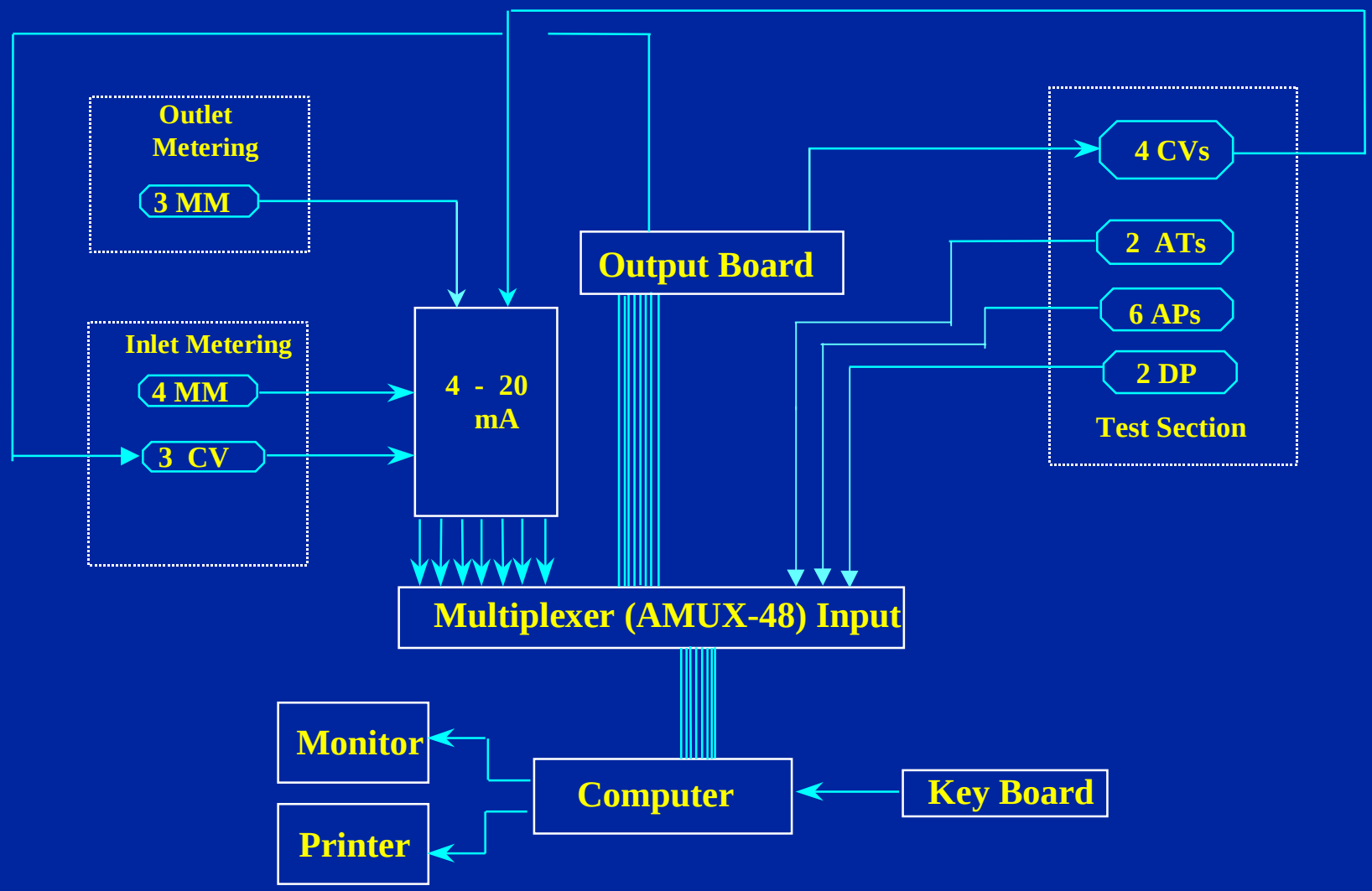

Data Acquisition System

GLCC Configurations

- Two types of configuration will be considered
  - Single-Stage GLCC
  - Two-Stage GLCC

Single-Stage GLCC

Case 1:

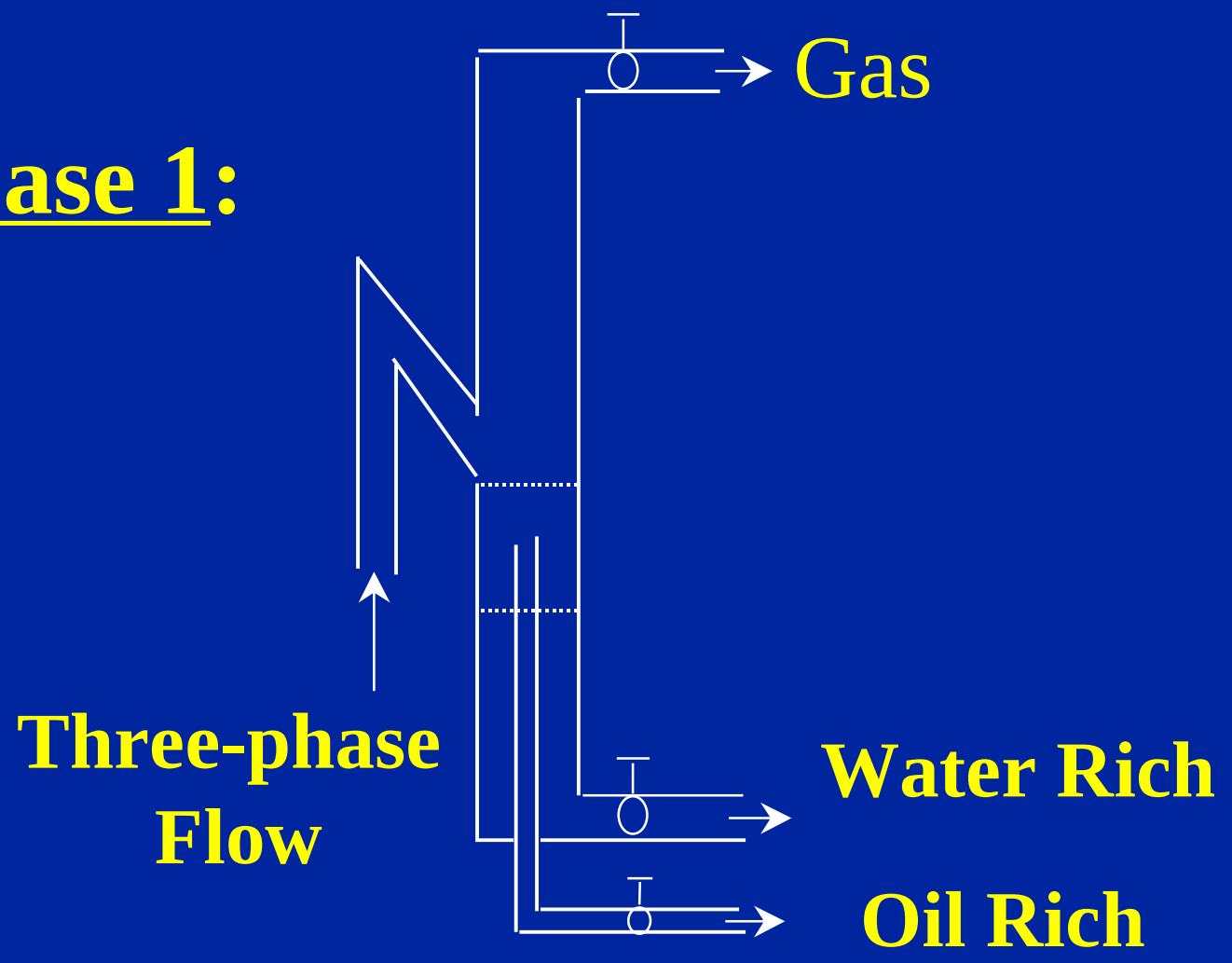

Two-Stage GLCC© / LLCC©

Case 2:

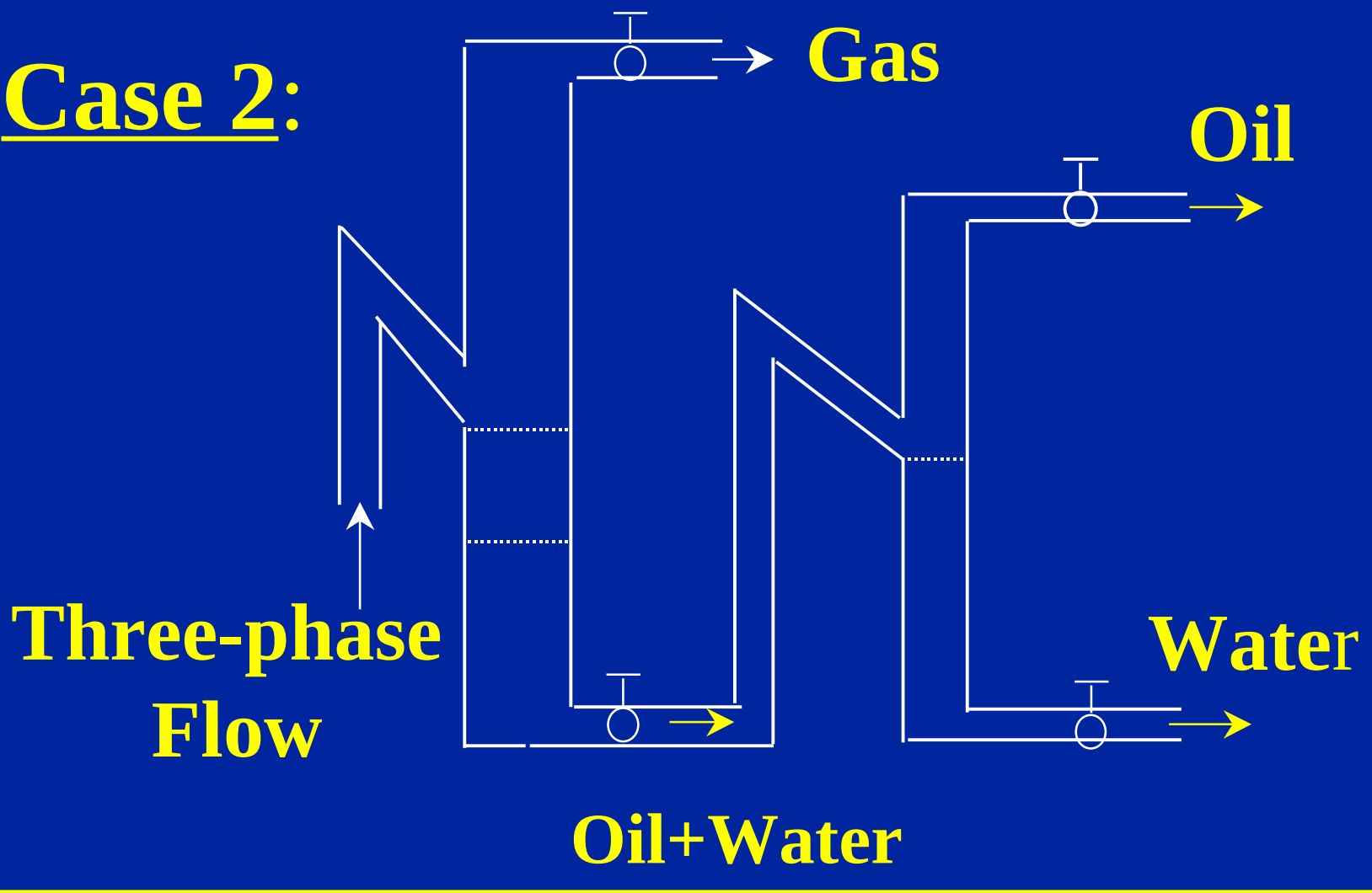

Three-Phase GLCC Design

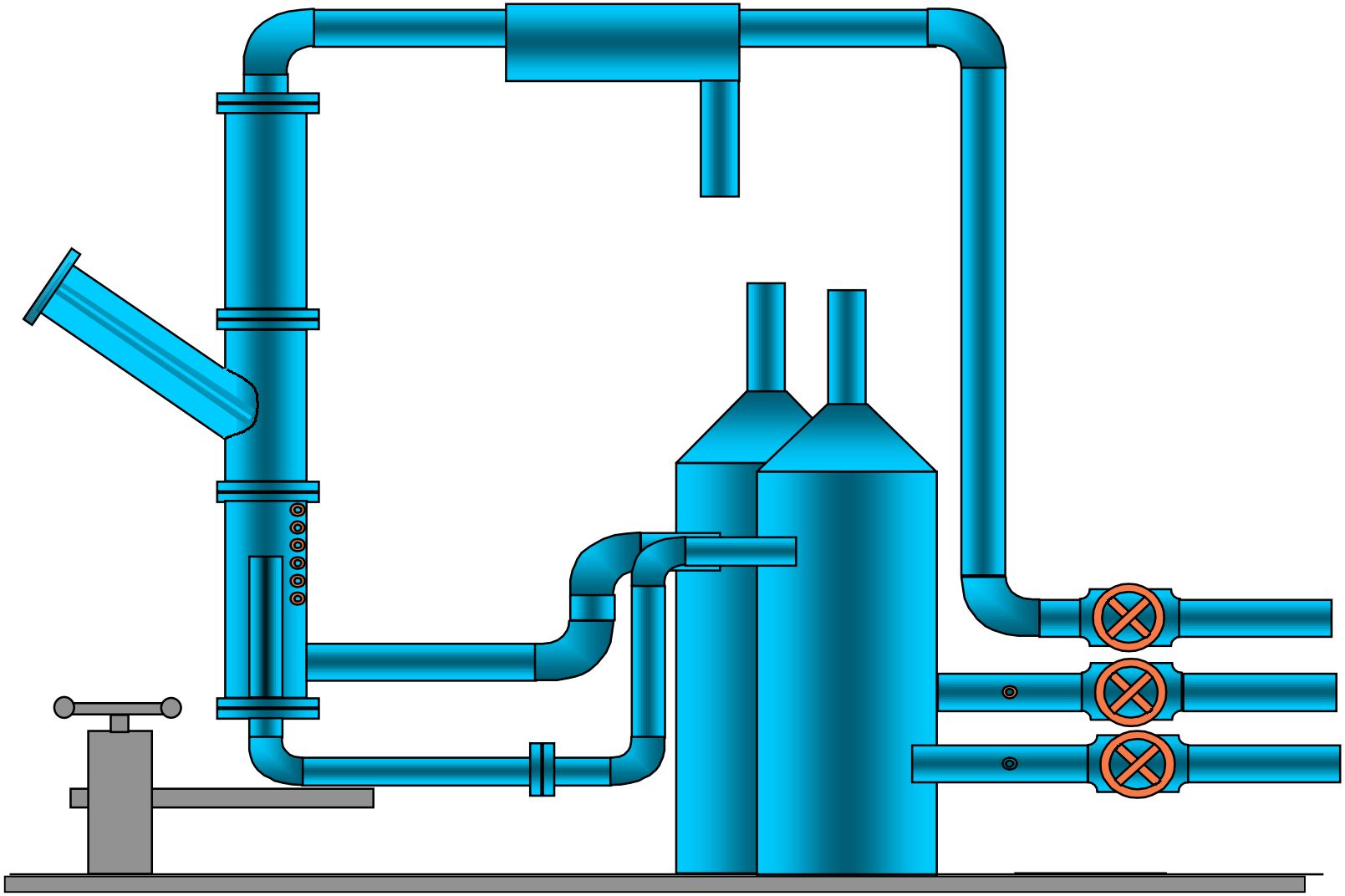

Project Status

- Design and Construction of New Three-Phase Flow Loop - Completed
- Instrumentation and Data Acquisition System - Completed
- Oil-Water Runs - In Progress
- Three-Phase GLCC Design - In Progress

Overview of Three-Phase Flow Loop

Oil, Water and Gas Lines

Oil-Water Mixing

Downstream Metering

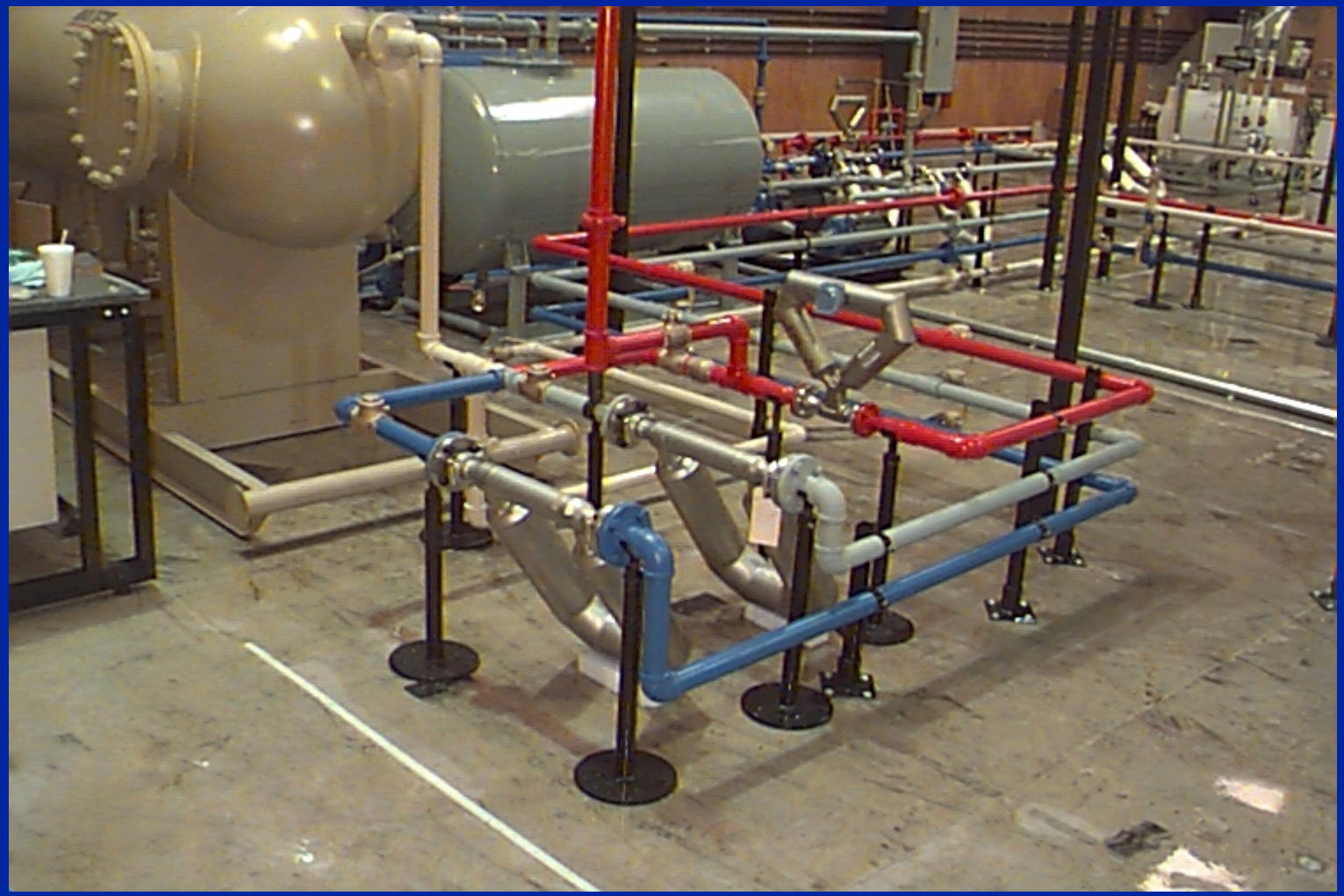

LLCC© in Place

Oil/Water Separation in LLCC©

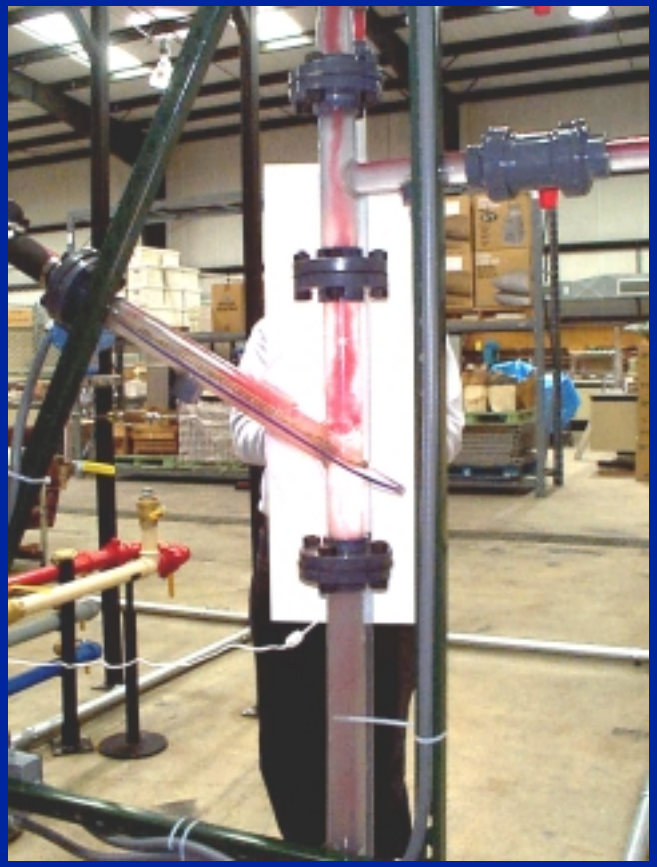

Conclusions & Near Future Work

- Oil/Water Mixtures Can be Separated in the LLCC© with Efficiencies Greater than 80%.
- Summer 1999
  - Construction and Installation of Three-Phase GLCC
  - Preliminary Data Acquisition
- Fall 1999
  - Completion of Data Acquisition
  - Initial Mechanistic Model