the ENERGY lab

E&P Focus

Fall 2014 Oil & Natural Gas Program Newsletter

CONTENTS

Understanding CO_2 EOR.....1

Editor's Letter 2

CO_2 Capture and Sequestration of Steam Methane Reforming Process Gas.....4

Hydrogen Energy California Project: Co-Production of Power and Fertilizer.....6

Summit Texas Clean Energy, LLC, Texas Clean Energy Project: Pre-Combustion CO_2 Capture and Sequestration.....8

East Texas Oilfield CO_2 EOR.... 10

Near Miscible CO_2 Flooding in the Arbuckle 12

Commercial Exploitation and the Origin of Residual Oil Zones: Developing a Case History in the Permian Basin..... 14

Moving CO_2 EOR Offshore..... 18

E&P Snapshots 22

CONTACTS

Roy Long

Technology Manager
Ultra-Deepwater/Offshore
304-285-4479
roy.long@netl.doe.gov

Eric Smistad

Technology Manager
Oil & Gas
281-494-2619
eric.smistad@netl.doe.gov

U.S. DEPARTMENT OF ENERGY

Understanding CO_2 EOR

CO_2 EOR–The Basics: The first priority for carbon dioxide enhanced oil recovery (CO_2 EOR) is a reliable source of CO_2. Three sources are available to the oil and gas industry:

- Naturally occurring underground sources, where the gas is primarily CO_2 (90% or higher);
- CO_2 separated from produced methane gas;
- CO_2 captured from exhaust gases produced during electrical power generation and other industrial processes that burn hydrocarbon fuels. This source is known as anthropogenic (human-produced) CO_2.

CO_2 collected by one or more of these three methods is pipelined to a producing oil field for CO_2 EOR. Candidate fields for the CO_2 EOR process, a form of tertiary (third phase) enhanced recovery, are generally older fields that are in severe decline, having undergone primary and secondary recovery. Secondary recovery in candidate and CO_2 EOR producing fields is generally water flooding. Previously water-flooded fields normally respond very well to CO_2 EOR.

At the field, the CO_2 is injected into the producing formation. Often, CO_2 floods involve the injection of volumes of CO_2 alternated with volumes of water, called water-alternating-gas or WAG floods. This approach helps to mitigate the tendency for the lower viscosity CO_2 to finger its way ahead of the displaced oil. Once the injected CO_2 breaks through to the producing well, any gas injected afterwards will follow that path, reducing the overall

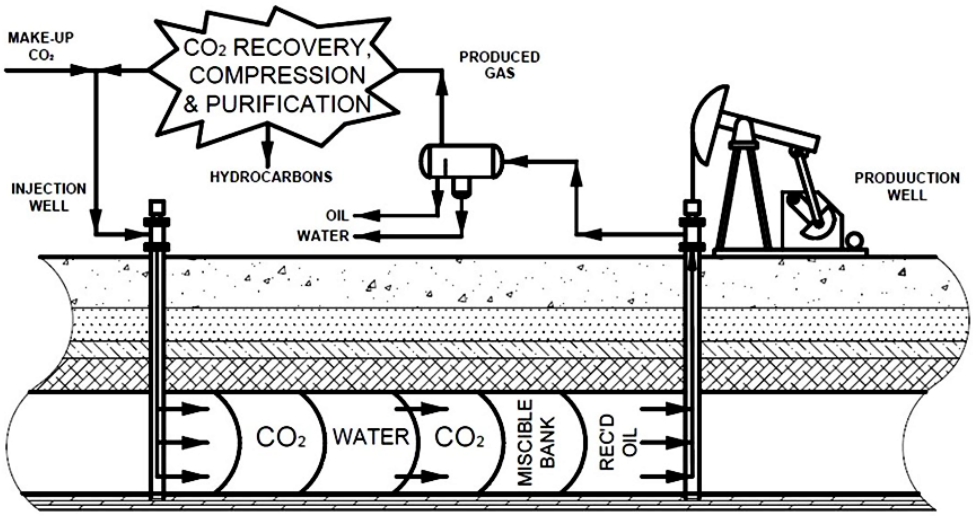

Diagram of a typical CO_2 EOR WAG operation. As CO_2 dissolves in the oil it swells the oil and reduces its viscosity, helping to improve the efficiency of the displacement process.

NATIONAL ENERGY TECHNOLOGY LABORATORY

1450 Queen Avenue SW
Albany, OR 97321
541-967-5892

420 L Street, Suite 305
Anchorage, AK 99501
907-271-3618

3610 Collins Ferry Road
P.O. Box 880
Morgantown, WV 26507-0880
304-285-4764

626 Cochrans Mill Road
P.O. Box 10940
Pittsburgh, PA 15236-0940
412-386-4687

13131 Dairy Ashford, Suite 225
Sugar Land, TX 77478
281-494-2516

Visit the NETL website at:
www.netl.doe.gov

Customer Service:
1-800-553-7681

E&P Focus is published by the National Energy Technology Laboratory to promote the exchange of information among those involved in natural gas and oil operations, research, and development.

This newsletter is available online at http://www.netl.doe.gov/E&P Focus

Editor's Letter

NETL Invests in CO_2 EOR

For the past several decades, the U.S. and the rest of the world have faced two important questions. First, how will we obtain the energy necessary to support the continued growth and betterment of the world's population? And, second, how can we produce and utilize these energies in ways that have a minimal impact on the environment?

The Energy Information Administration's (EIA) International Energy Outlook (2013) projects that demand for all forms of energy will continue to grow and that carbon dioxide emissions related to fossil fuels will also grow (see Figures 1, 2).

Since its inception in 1972, Carbon Dioxide Enhanced Oil Recovery (CO_2 EOR) has offered a partial solution to both of these issues. NETL has actively worked to advance CO_2 EOR technology as a key part of its commitment to help provide safe and cleaner energy options for the nation. In this edition of E&P Focus you will find descriptions of the CO_2 EOR research funded by NETL and its potential impact on increased oil production and enhanced greenhouse gas emissions reduction.

The Editor

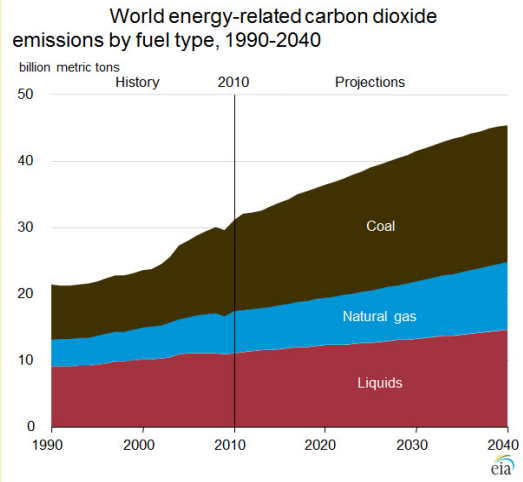

Figure 1. World energy-related carbon dioxide emmisions by fuel type, 1990-2040

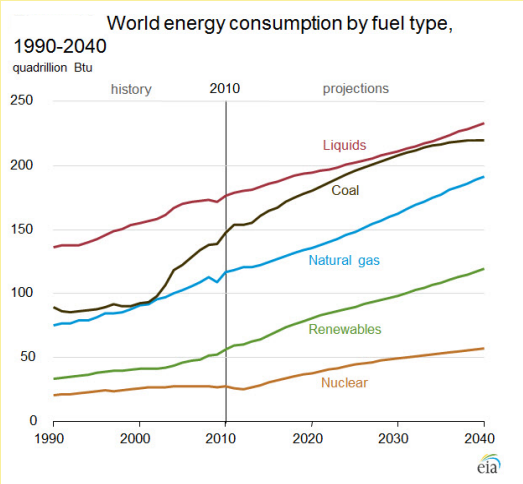

Figure 2. World energy consumption by fuel type, 1990-2040

efficiency of the injected fluids to sweep the oil from the reservoir rock.

In either direct injection or WAG, the CO_2 sweeps through the formation, forming a leading miscible bank. The miscible bank is a phase in which the CO_2 combines with the oil in the formation, swells the oil particles and breaks the surface tension between the injected gas and the oil, allowing the oil to be swept from the formation toward the producing wells. Upon recovery from the producing well, the wellbore fluid containing oil, formation water and gas is separated into its components. The separated gas, primarily CO_2, is combined with imported natural or anthropogenic CO_2 and reinjected into the formation, together with the separated water, creating continuous WAG circulation through the producing formation and, thereby, sustaining CO_2 EOR.

When final depletion levels are reached and oil production falls to an uneconomic level, the field is abandoned. When a well or field is abandoned, all CO_2 used in the CO_2 EOR process remains in the formation and is permanently stored away from the atmosphere.

CO_2 Injection Well at the Citronelle Project in Southern Alabama.

CO_2 Capture and Sequestration of Steam Methane Reforming Process Gas

Under the Industrial Carbon Capture and Storage (ICCS) program, the U.S. Department of Energy (DOE) is collaborating with industry in cost sharing arrangements to demonstrate the next generation of technologies that will capture CO_2 emissions from industrial sources and either sequester those emissions or beneficially reuse them in CO_2 EOR. The technologies included in the ICCS program have progressed beyond the research and development stage to a scale that can be readily replicated and deployed into commercial practice within the industry.

Project Description

The DOE selected Air Products and Chemicals, Inc. (Air Products) to receive ICCS program funding through the American Recovery and Reinvestment Act (ARRA) of 2009, for its project entitled "Demonstration of CO_2 Capture and Sequestration of Steam Methane Reforming Process Gas Used for Large-Scale Hydrogen Production". Under this project, Air Products is demonstrating a state-of-the-art system to concentrate CO_2 from two steam methane reformer (SMR) hydrogen production plants located in Port Arthur, Texas (see Figures 1, 2).

Air Products retrofitted its two Port Arthur SMRs with a vacuum swing adsorption (VSA) system to separate the CO_2 from the process gas stream,

Figure 1. Port Arthur plant (one of two SMR units).

followed by compression and drying processes. This process concentrates the initial stream containing from 10-20 percent CO_2 to greater than 97 percent CO_2 purity. The technology removes more than 90 percent of the CO_2 from the process gas stream used in a world-class scale hydrogen production facility with negligible impact on the efficiency of hydrogen production. The first separation system began operations in December 2012 and the second in March 2013. Through mid-December, 1.6 million metric tons had been separated and shipped.

The compressed CO_2 is delivered to the Denbury pipeline for transport to Texas for enhanced oil recovery (EOR) projects in the West Hastings Field, where it is injected into the oil and gas producing formations in a miscible flood program to increase oil production. A monitoring, verification

and accounting (MVA) program ensures the injected CO_2 remains in the underground geologic formation.

Projected Achievements

Overall, the project addresses climate change concerns, enhances U.S. economic and energy security, and boosts domestic oil production. Specific project advantages and benefits include:

- Capturing approximately one million metric tons per year of CO_2, that would otherwise be emitted to the atmosphere, for permanent storage in geologic formations in EOR applications.
- The CO_2 to be used for EOR will result in approximately 1.6 to 3.1 million barrels of additional domestic oil production.
- The technology application is significant, with the U.S. dedicated hydrogen estimated to be almost four million tonnes annually. The two Port Arthur SMRs represent 4.3 percent of this market, primarily for use by refineries.

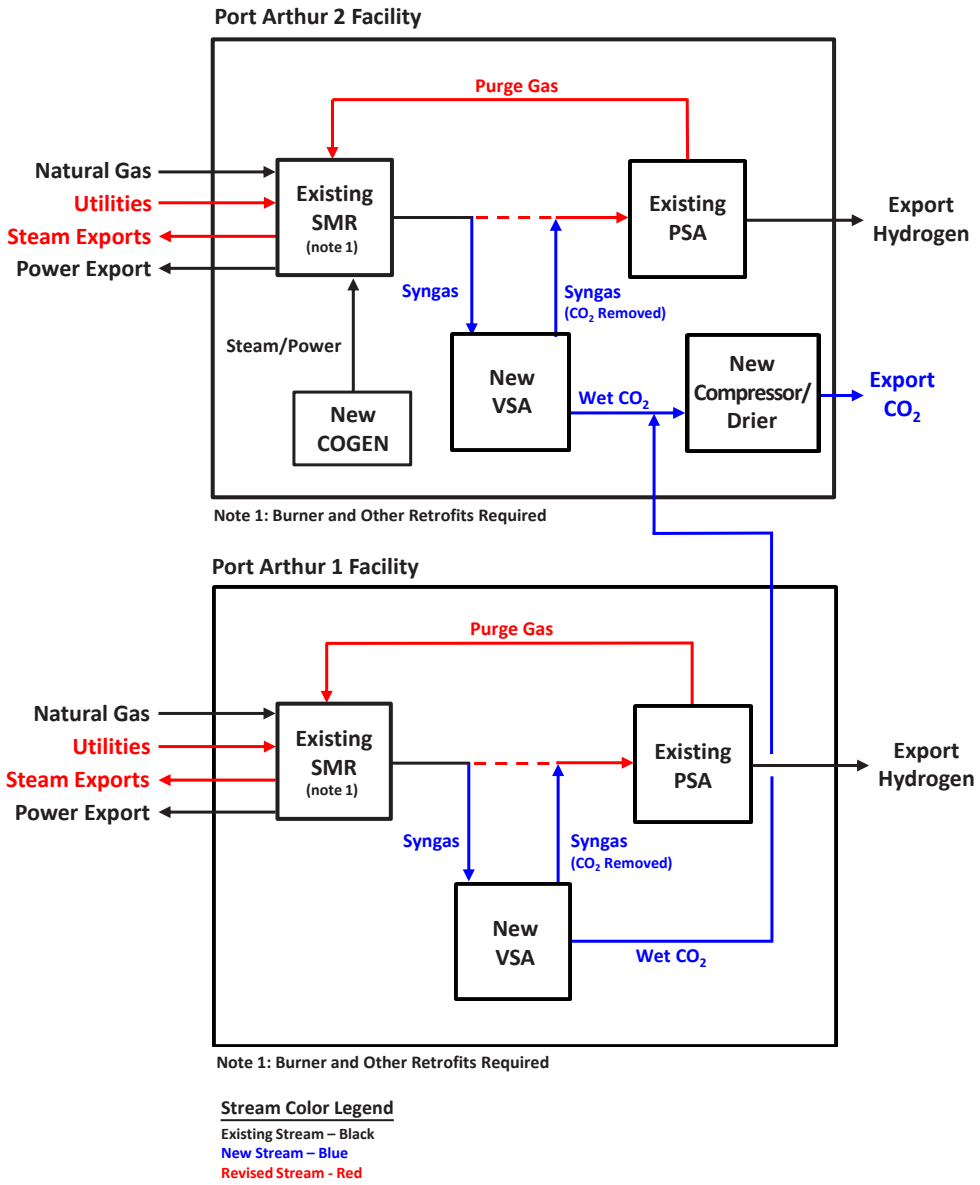

Figure 2. Flow diagrams for both Port Arthur units showing existing elements and new flow streams resulting from the CO_2 capture project.

Hydrogen Energy California Project: Co-Production of Power and Fertilizer

DOE is providing financial assistance under Clean Coal Power Initiative (CCPI) Round 3 to Hydrogen Energy California LLC (HECA), along with private capital cost sharing, to demonstrate an advanced coal-fired generating plant that co-produces electricity and fertilizer products. The project will employ integrated gasification combined cycle (IGCC) technology to nominally generate 400 megawatts (MWe) gross, and up to 300 MWe (net), of electricity and produce approximately one million tons per year of fertilizer using a 75 percent sub-bituminous coal and 25 percent petroleum coke fuel blend. The fertilizer could be a combination of urea ammonium nitrate (UAN), urea, or other fertilizer equivalent, with the proportion dependent on market and commercial conditions. The CO_2 off-take agreement contemplated by HECA will enable geologic storage of CO_2 at a rate of approximately 2.6 million tonnes per year. The captured CO_2 will be transported via pipeline to the Elk Hills oil field, approximately four miles from the power plant, for use in CO_2 enhanced oil recovery (EOR).

The project will utilize the Mitsubishi Heavy Industry (MHI) two-stage oxygen-blown gasification technology and combined cycle power block. A Rectisol® acid gas removal system will be employed to achieve the intended CO_2 capture efficiency. Water quality and availability issues are addressed by utilizing local brackish groundwater treated on-site to meet all industrial process water requirements. The brackish groundwater will be supplied from the Buena Vista Water Storage District (BVWSD), which is a local water district with some groundwater sources not suitable for agricultural use. The project will also incorporate a Zero Liquid Discharge (ZLD) system. All project wastewater, including wastewater generated from the IGCC, raw water treatment, and cooling tower blowdown will be directed to ZLD system(s) with the recovered water recycled for reuse in the process. This further reduces the water demands of the project.

Benefits

The project will be among the cleanest of any commercial solid fuel power plant built or under construction and will significantly exceed the emission reduction targets for 2020 established under the Energy Policy Act of 2005. In addition, emissions from the plant will be well below the California regulation requiring base-load plants to emit less greenhouse gases than comparably-sized natural gas combined cycle power plants. The CO_2 captured by the project will enable geologic storage at a rate of approximately 2.6 million tonnes of CO_2 per year and will increase domestic oil production.

Specific project benefits include:

- Achieving approximately 90 percent CO_2 capture efficiency.
- Geologically storing approximately 2.6 million tonnes of CO_2 per year while producing about 5 million barrels of oil per year.
- Incorporating the beneficial use of CO_2 for EOR and geologic storage. EOR brings economic and energy security benefits.
- Meeting California's increasing power demands by generating low-carbon hydrogen power.

- Maximizing the use of local, non-potable brackish groundwater for all process and cooling needs will maintain area freshwater aquifers for agricultural use. All project wastewater will be directed to the 100 percent ZLD system, with the recovered water recycled for reuse in the process.
- Providing a low carbon footprint for California's key agricultural market and substantially lowering foreign imports of fertilizer to the U.S.
- Boosting California's economy by creating 2,500 local construction jobs and about 140 permanent operational positions.

Figure 1. Artists Rendition of HECA Polygen - 400MWe (gross) Power Plant with 1 million ton/yr fertilizer production facility.

Summit Texas Clean Energy, LLC, Texas Clean Energy Project: Pre-Combustion CO_2 Capture and Sequestration

Under the Clean Coal Power Initiative (CCPI) Round 3 program, the U.S. Department of Energy (DOE) is providing financial assistance, including funding under the American Recovery and Reinvestment Act (ARRA) of 2009, to industry for the purpose of demonstrating the commercial viability of next generation technologies that will capture CO_2 emissions from coal-based electric power generating facilities and either store those emissions, or beneficially reuse them. The Texas Clean Energy Project (TCEP) was awarded on January 29, 2010.

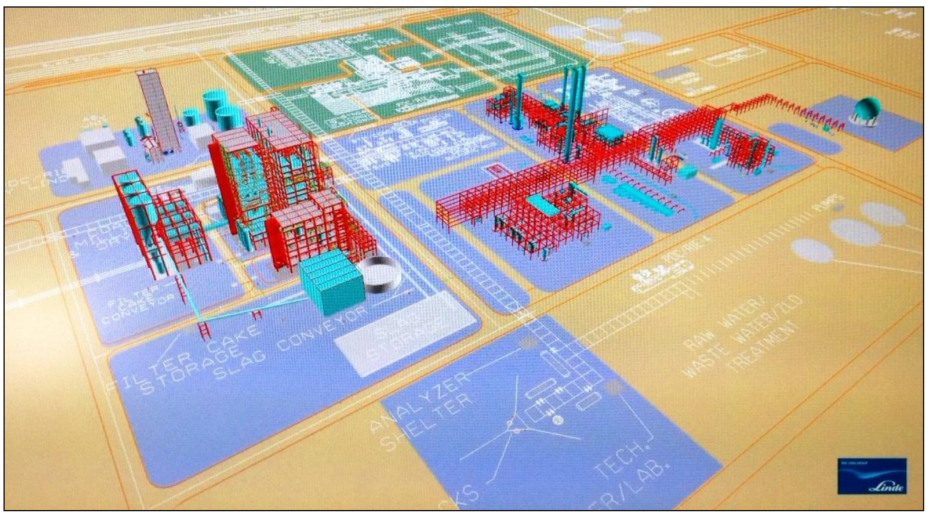

Figure 1. Early Rendering of TCEP IGCC Facility

Project Description

The TCEP will be a greenfield integrated gasification combined cycle (IGCC) poly-generation facility with fully integrated CO_2 capture to be located in Penwell, Ector County, Texas. The TCEP will produce electricity for export to the grid and other high-value marketable products, including CO_2, urea, and sulfuric acid. The IGCC facility will deploy Siemens commercial gasification and power block technologies (Figs. 1,2). Two SFG-500 (500 megawatt-thermal) gasifiers will produce syngas that will be quenched, cleaned and shifted to a high-hydrogen (H_2) concentration. The power block will consist of one SGT6-5000F combustion turbine, one triple-pressure heat recovery steam generator (HRSG) and one SST-900RH reheat steam turbine for power generation rated at 400 megawatts (gross). The facility will use water-gas shift and Linde Rectisol® acid gas removal technology to capture about 90 percent of the total CO_2 produced from the facility.

The captured CO_2 will be divided into two streams. About 21 percent of the CO_2 will be used in producing approximately 2,156 tons per day of urea fertilizer. The balance of the CO_2 will be compressed for transport by existing regional pipe-lines to oilfields in the west Texas Permian Basin for beneficial use in enhanced oil recovery (EOR) operations with concomitant geologic storage. The west Texas Permian Basin is the largest market in the world for CO_2 EOR.

Benefits

The Texas Clean Energy Project represents an important step in advancing the commercialization of technologies that capture CO_2 from pre-combustion syngas in existing and new electric generating power plants. Standards that limit CO_2 emissions from coal-based electric generation stations do not yet exist, but it is possible that this type of regulation may be enacted in the near future. By producing electricity and other marketable products, while simultaneously capturing and storing greenhouse gas emissions, the project will demonstrate that domestic coal can remain a viable energy source to meet the Nation's growing energy demands while minimizing the potential environmental impact. Additionally, the project will demonstrate that the poly-generation approach is an economical route for IGCC technology. Specific project benefits are as follows:

- The capture of up to 3,000,000 tons per year of CO_2 from the entire plant syngas stream prior to combustion.
- Long-term geologic storage of the captured CO_2.
- Increased domestic oil production, which will contribute to national energy security.
- A path forward for existing and new coal-based power plants to continue to provide economical energy production while meeting environmental sustainability goals.

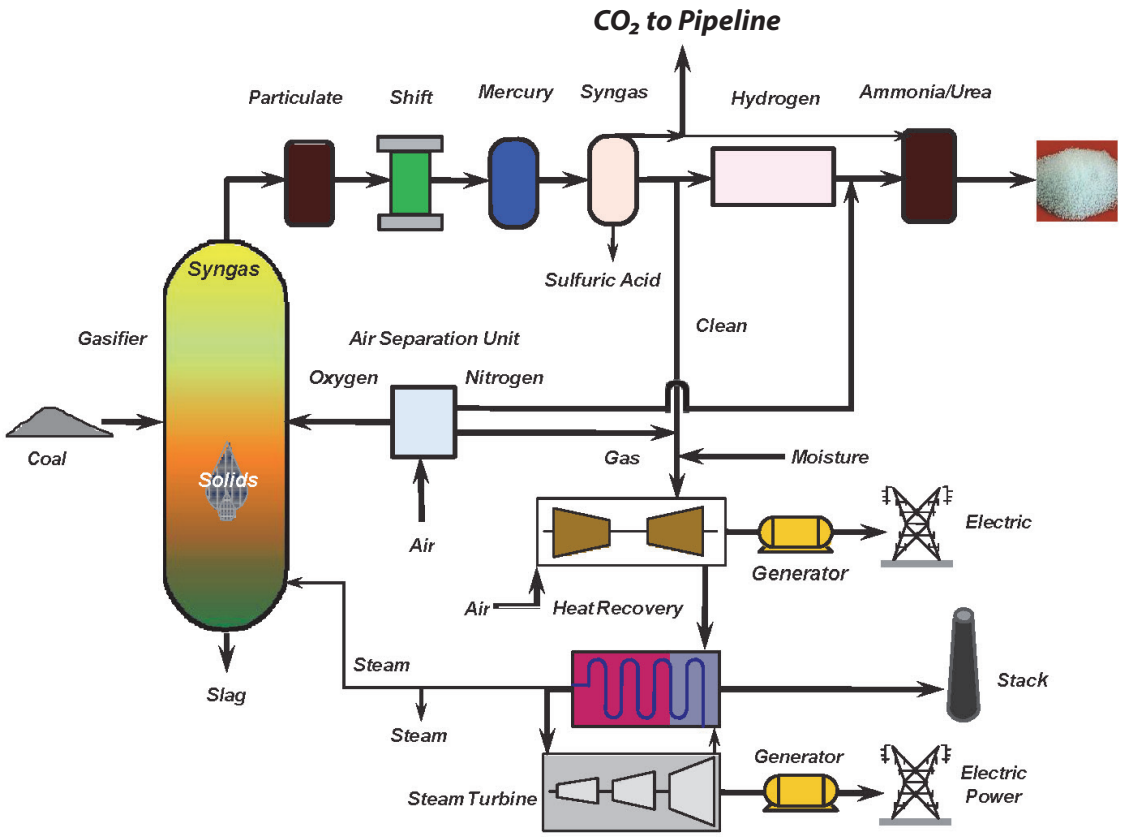

Figure 2. Texas Clean Energy Project CO_2 Capture and Storage Concept

East Texas Oilfield CO_2 EOR

The East Texas Oil Field (ETOF), discovered on September 3, 1930, has produced 5.44 billion stock tank barrels (BSTB) of 39° American Petroleum Institute (API) oil from lower Woodbine sandstones in more than 31,000 wells. Estimated original oil in place (OOIP) varies from 6.8 to 7.5 BSTB. Given a midrange OOIP value of 7.0 BSTB, current recovery efficiency is 77%, which is the highest of any giant oil field in the world.

Between 2009 and 2014, DOE partnered with the University of Texas at Austin and two independent producers to explore short and medium-term strategies for maximizing recovery from the East Texas Oil Field.

EOR Target

After 84 years of production, some 1.5 billion barrels (bbl) of oil remains in the reservoir. Targeting and producing this oil has proven difficult. Since the late 1990's, major oil companies have sold most of their properties to small producers. Development of strategies to recover this oil has become a critical issue because most current operators do not have sufficient expertise and support in geology and engineering, which are crucial to revitalizing production as well as to lowering production cost.

In spite of the field's excellent reservoir quality and remarkable long-term performance history, details of its depositional environment and reservoir architecture have not been fully studied and have only recently become better understood. Currently, about 1,570 million stock tank barrels (MMSTB) of oil remains in the reservoir—470 MMSTB of this

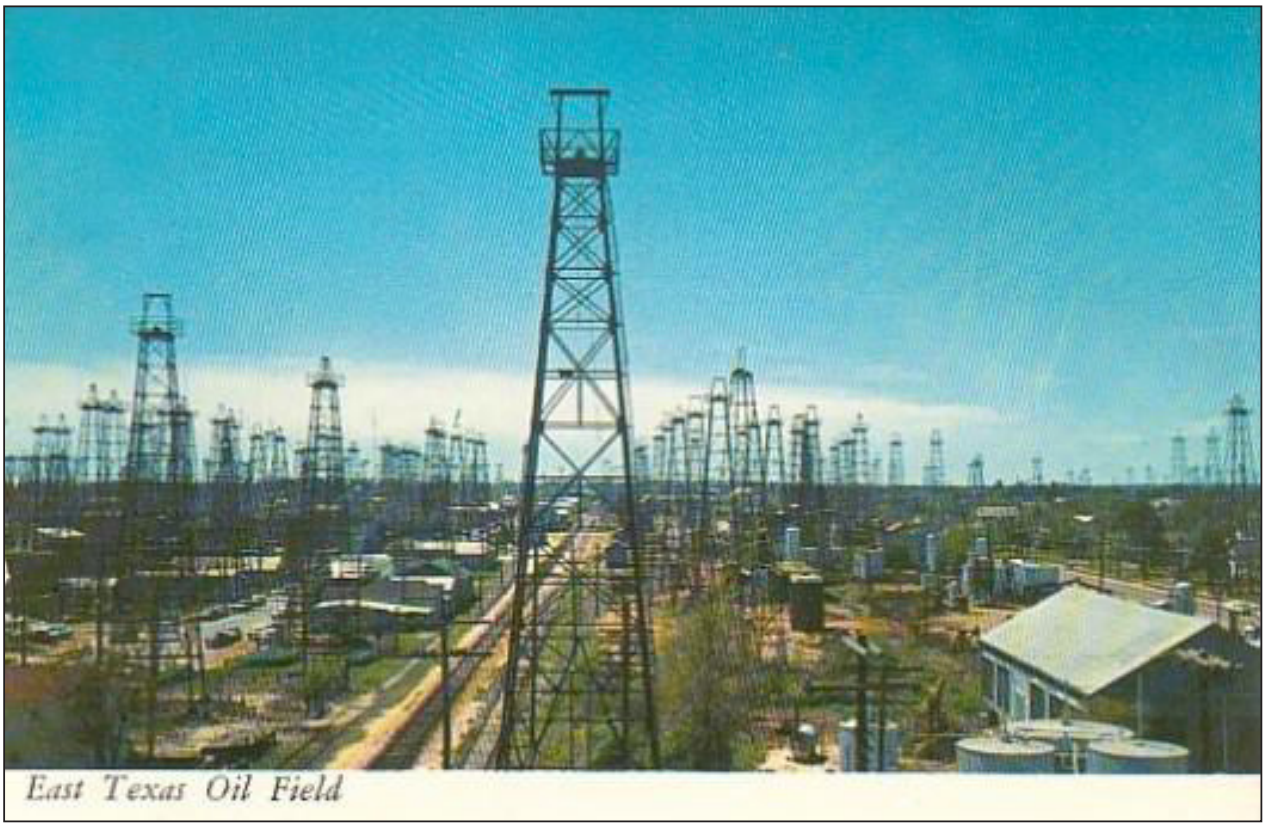

Figure 1. Photo of a portion of the East Texas Oil Field in the 1930s near Tyler Texas. Photo courtesy www.tylertexasonline.com.

total is remaining mobile oil and 1,100 MMSTB is residual oil. Of the 470 MMSTB of remaining mobile oil, about 70 MMSTB should be produced by 2030, according to decline-curve analysis; and 400 MMSTB is untapped, unswept, or poorly swept. A fraction of the 470 MMSTB remaining mobile oil can be produced using strategically targeted recompletions and waterfloods guided by depositional trends, whereas residual oil can be produced only by enhanced oil recovery (EOR) methods.

Project Objectives

The goals of this project were to evaluate deepening and behind-pipe opportunities and enhanced oil recovery (EOR) potentials to maximize recovery from the ETOF, a field currently operated by 114 small producers. This field-demonstration project had two industrial partners, Danmark Energy LLP and John Linder Operating Co., and two primary goals: (1) locating well-deepening and waterflooding targets guided by depositional trends through detailed mapping of reservoir architecture, and (2) conducting a feasibility study on EOR methods for recovering a portion of the ~1.1 billion stock tank barrels (BSTB) of residual oil. The processes are low cost, low risk, and potentially highly profitable. While the geographic scope of the project was limited to only parts of the giant ETOF, results should serve as an important geologic and engineering research source to provide crucially needed support to all operators in the field. Research findings have already been efficiently transferred into production enhancement for many operators.

Depositional environments of lower stringer sandstones in the northern and middle parts of the ETOF were mapped using more than 600 wells, and deepening candidates were identified based on architecture of depositional systems. With the help of results from this study, 8 out of 15 workover/recompletion targets successfully produced more than 140,000 STB of crude at a low cost about $1 million. With net revenues of some $11 million on these deepenings and workovers alone, the project has already created considerable benefits for operators.

Both surfactant/polymer and CO_2 floodings were tested in the laboratory using ETOF and Berea sandstone cores. Oil recovery of 70% by miscible CO_2 flooding in ETOF cores is slightly lower than 85% recovery in Berea sandstone cores. Oil recovery by alkaline-surfactant-polymer (ASP) flooding in Berea and ETOF cores is 90% and 28%, respectively. Significantly lower oil recovery in ETOF cores might have stemmed from the high adsorption of surfactant by clay minerals; in addition, the optimal three-phase condition was not achieved in the core flooding.

The final report for this project, "Development Strategies for Maximizing East Texas Oilf Field Production," project number 08123-16, is available online at http://www.netl.doe.gov/research/oil-and-gas/

Near Miscible CO_2 Flooding in the Arbuckle

CO_2 injection Projects are normally operated at a pressure above the minimum miscibility pressure (MMP), which is determined by crude oil composition and reservoir conditions. However, many reservoirs in the United States and around the world are located at shallow depths or geologic conditions exist such that they operate at pressures below the MMP. For example, one part of the Arbuckle formation in the Bemis-Shutts field in Kansas has a MMP of 1400 psia while the current maximum operating pressure is at 1100 psia in a large portion of the field. Another part of Arbuckle reservoir in the Ogallah unit has a MMP of 1350 psi while it is operating at current reservoir pressure in the neighborhood of 1150 psi.

Between 2011 and 2014 the DOE partnered with the Kansas Geological Society and the University of Kansas to carry out research to test the notion that a significant amount of residual oil could be second from Arbuckle reservoirs with CO_2 EOR at pressures less than that required to achieve miscibility.

EOR Target

Arbuckle reservoirs are a significant resource in Kansas for improved oil recovery. These reservoirs have produced an estimated 2.2 billion barrels of oil, representing 35% of the 6.1 billion barrels of oil of total Kansas oil production. Most Arbuckle reservoirs have active water drives which have maintained reservoir pressure at 1000-1100 psig for nearly 50 years even though millions of barrels of fluid have been produced. Initial studies of CO_2 miscible flooding indicated that miscibility is not achievable at the reservoir operating pressure in most Arbuckle reservoirs. Currently, over a hundred small producers are operating in Arbuckle reservoirs. Unless an alternative technology is introduced, many of these fields in central Kansas will be abandoned with substantial remaining oil left in place.

For this reason, the Ogallah Unit was used in this project as an example to demonstrate an approach to evaluate CO_2 displacement in the near miscible region. The goal of this project is to demonstrate near miscible CO_2 application can substantially increase oil production rates with CO_2 injection at pressures below MMP. The application of CO_2 injection at near miscible conditions may lead to development of CO_2 projects for small producers in reservoirs where the MMP is not attainable at current operating reservoir pressures.

Overview of Ogallah Unit

The target oil field, Ogallah Unit is located at Trego County, Kansas (as shown in Figure 1). The unit is currently operated by Carmen Schmitt, Inc. The unit produces from the Arbuckle formation (3950-4060 ft.) and other formations above the Arbuckle (Marmaton and Lansing-Kansas City). The Arbuckle formation is associated with a structural high at the central Kansas uplift and is thin to absent in parts of Northeastern Kansas. Reservoir temperature ranges from 92°F to 130°F with an average temperature of 110°F. Active water drives have maintained reservoir pressure at approximately 1150 psi.

Primary production of the Ogallah started in 1951. Well production history shows that no water was produced before 1960. Water breakthrough in producers started after 1960. Due to the high water production, wells were worked over with well deepening, formation plug-back and perforation at upper intervals. At the peak of production in 1969, the Ogallah field had 85 producing wells. The field was producing 1.07 MMBO/year with cumulative production of 11.37 MMBO by 1969. After 1969, the field commenced

commingle-production from the Lasing Kansas City formation (LKC) and half of those wells were shut in at 1989 due to economic decline. The Ogallah field was unitized in 1991 and the number of active producers since then was reduced to 18.

Experimental Study

The experimental study was comprised of fundamental studies of phase behavior for the CO_2/crude oil system and the displacement process at near miscible conditions. Phase behavior studies between CO_2 and Arbuckle crude oil were carried out to define near miscible conditions in the Arbuckle formation at the Ogallah unit. Slim-tube experiments were conducted to determine the MMP. Swelling tests were performed to determine the relationship between saturation pressure, swelling factor and CO_2 volume injected. Extraction tests were conducted to examine extraction of liquid hydrocarbon into CO_2-rich phase and the effect of pressure on the extraction. The results from both tests were used to examine the phase behavior at near miscible conditions independently from slim-tube experiments, and to identify characteristics of phase behavior in the CO_2 displacement process. A phase behavior model based on the Peng-Robinson equation of state was used to characterize the experimental phase behavior interaction between CO_2 and oil. Core flow tests were conducted at pressures at near miscible condition in which the effect of CO_2 injection pressure and water saturation on oil recovery was evaluated. Completion of these experimental studies allowed development of a representative flow model to simulate near miscible displacement physics and extend it to simulate CO_2 injection process in a reservoir model of oil field.

A project website detailing the results is available at https://www.torp.ku.edu/research/near-miscible-CO2

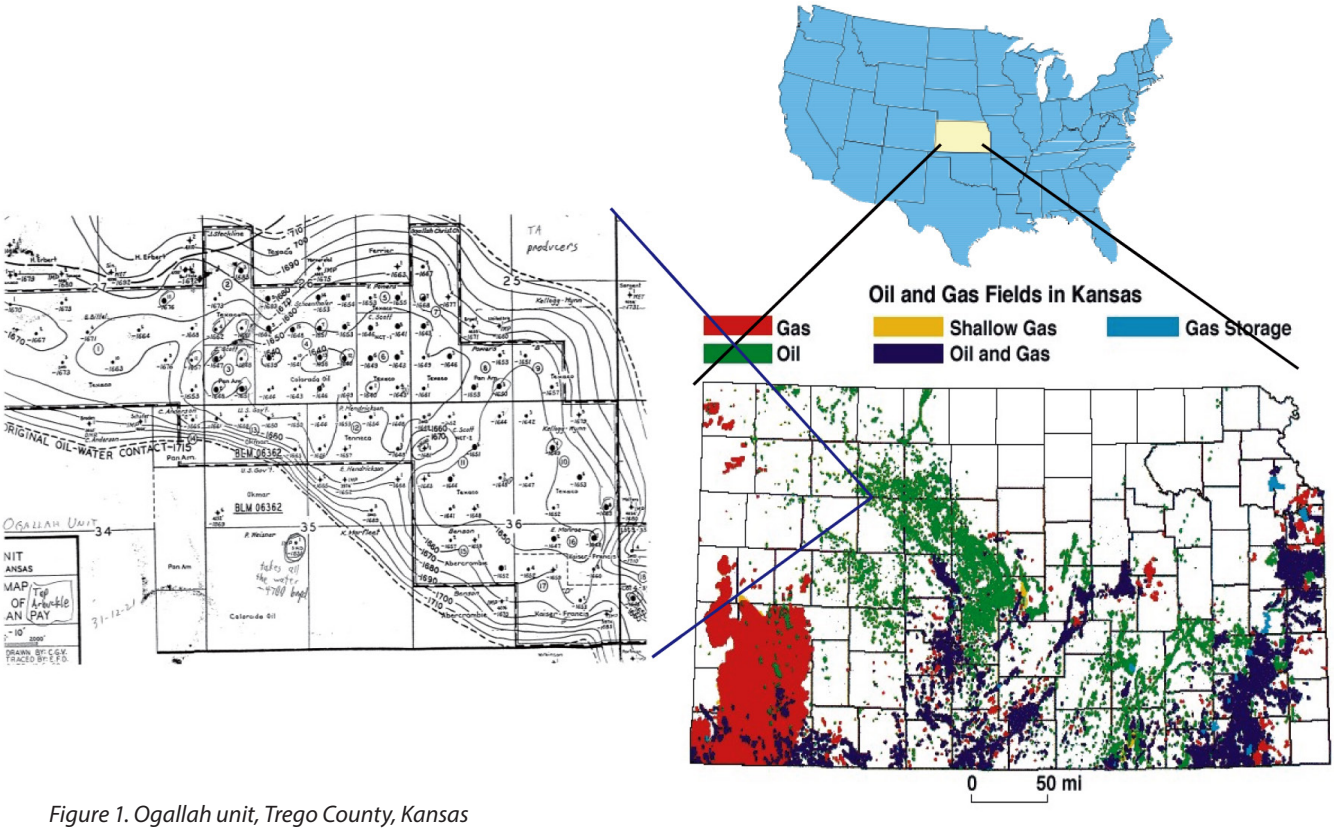

Figure 1. Ogallah unit, Trego County, Kansas

Commercial Exploitation and the Origin of Residual Oil Zones: Developing a Case History in the Permian Basin

A large new resource of recoverable oil has been identified in the San Andres dolomite formation. Residual Oil Zones (ROZs), up to 300 ft. thick and containing up to 20-40% oil in pores of the dolomitic reservoir are present both below and between presently productive fields. The oil in the ROZs is residual, i.e., not recoverable by primary production methods or water flooding, but the oil is recoverable using enhanced oil recovery (EOR) methods such as CO_2 EOR. Although preliminary at this stage, the estimated oil in place in the ROZ's likely exceeds 100 million barrels of oil and is equal to the original oil in place in the zones with mobile oil present (main pay zones, MPZs). The DOE has partnered with the University of Texas of the Permian Basin, Advanced Resources Intl., Melzer Consulting and a number of independent producers to delineate the size of the ROZ resource and develop technology to produce this oil using CO_2 EOR.

This project identifies and spatially maps the ROZ trend in what is referred to as the Artesia trend of the San Andres formation of Permian, Guadalupian Age. The probable origin of this ROZ is identified, and ways are outlined to explore and identify similar additional ROZ trends in the Basin. The study shows the identification of an ROZ is not necessarily expensive, can be undertaken by small operators, and can add value to both mineral leases and mineral ownership.

Background

ROZs have, as their analog, oil fields that possess mobile oil (main pay zones or MPZs), that originally flowed oil naturally and then were secondarily water flooded until oil production neared zero. The "waterflooded (swept) intervals" still have 20-40% residual oil in the pore space. The swept zones can be revived using CO_2 EOR. In fact, the Permian Basin now produces about 200,000 barrels of oil per day from CO_2 floods. On average, an additional recovery of 10-20% of the original oil in place in a field is possible using CO_2. This is oil that would not be recoverable without the aid of an injectant that liberates the oil.

What the industry has learned is that there is not a lot of difference between a main production zone (MPZ) interval that has been waterflooded and a ROZ. This study helps confirm that the ROZs have been flooded by Mother Nature, due to tectonic changes that have occurred after the establishment of a very large ancestral oil trap. The movable oil was swept away by a natural waterflood leaving behind the ROZs. Eleven CO_2 EOR projects now underway in the Permian Basin prove that the naturally waterflooded intervals are commercially attractive.

ROZs are evidenced during drilling by "shows" of oil in mud, in cuttings and cores, and by wireline logs showing residual oil saturations. Because of the shows, well completions or drill stem tests have often been attempted but result only in recoveries of black sulfur water, leading to expensive dry holes.

Defining the ROZ Trend

To define the Artesia Trend well logs, formation tops, drill stem tests, core data, water composition and pressure analysis, and geological data were gathered in an attempt to define and model the hydrological sweep process. Pressures recorded in drill stem tests were particularly useful in defining piezometric conditions. Careful definition and modeling

of present ground water movement, and analysis of the groundwater conditions prior to major water extraction, allowed calculation of rock properties that, in a model, reliably calculated movement of water in past geologic times. The model over geologic time concludes that the water charge entered the San Andres in the region west of Artesia, NM starting after the uplift in the Miocene Period and began its slow migration within the San Andres formation "fairways" to an area northeast of Fort Stockton coincident with the sulfur deposits there. During the migration of the water it displaced oil that was part of the paleo-trap causing sweep (displacement) of the oil and leaving the ROZs. The construct of the hydrological model allows scoping of the sweep process and insights as to the hydrodynamics and regional hydrology.

Evidence exists of other trends of ROZs in the Permian Basin. Using the methods found effective in this study, new investigations are being conducted to define their origins and map their distributions. The work should allow a more robust determination of the magnitude of the technically recoverable oil resource due to EOR in the Permian Basin.

EOR Target

It is now realized that ROZs contain oil that is recoverable by the use of miscible CO_2 EOR. Of the 15% to 35% oil trapped in ROZs some 10% to 20% can be recovered by CO_2 flooding. The CO_2 enters the oil causing it to swell, become less viscous and be forced out of pores. It may also change the surface tension of the oil and its attraction to the rock. Some of the oil

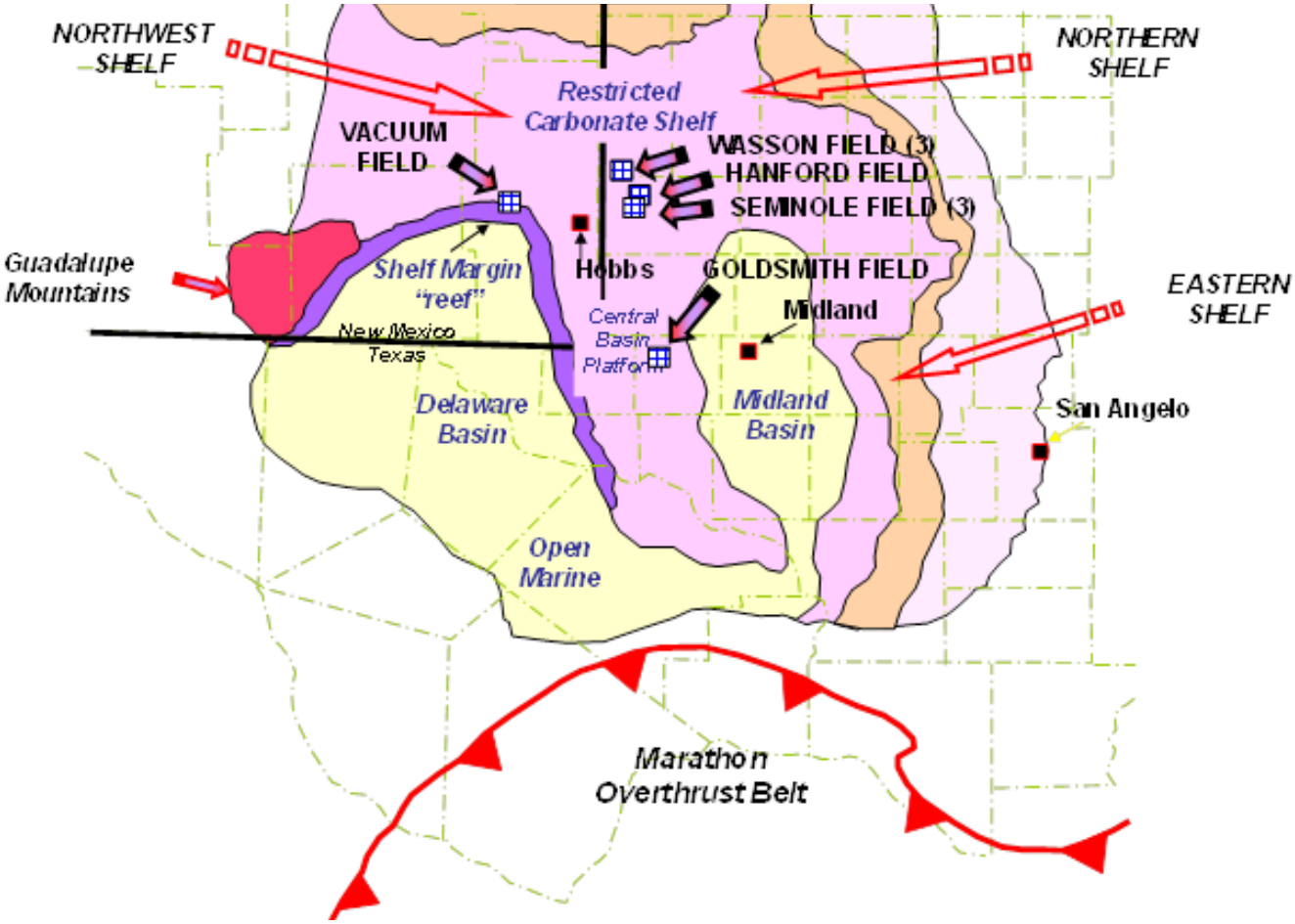

Figure 1. Middle San Andres Paleogeography Illustrating the Locations of ROZ Projects

is forced from the pores and the CO_2 is trapped, becoming sequestered. The idea that one can sequester CO_2 during EOR has led some to a name change of Carbon Capture and Storage (CCS), to Carbon Capture Use and Storage (CCUS).

Mechanism of ROZs

For a long period of time, the oil in place in reservoirs beneath the oil/water contacts was understood to be due to capillary "smearing" and surface tension in rock/water and oil phases. The widely accepted terminology was "transition zones." The language and lab tests supporting the concept effectively excluded the possibility that thick intervals of residual oil could be explained in other ways and that, in fact, the science of capillary forces could be superimposed on a more fundamental theory for why thick zones of residual oil (ROZs) exist.

The concept of post-entrapment tectonic adjustments to oil bearing basins proposed three mechanisms for readjustments of paleo entrapments. One of these types, lateral flushing from a nearby uplift, was seen to be especially dominant in the Permian Basin region of West Texas and southeastern New Mexico. In the meantime, several enhanced oil recovery projects were privately demonstrating economic oil recovery from the ROZs, elevating the importance of understanding their origins and distribution.

It was recognized that, if the lateral flushing mechanics was a plausible explanation for the ROZs, such a process might be modeled in a hydrological sense to attempt to better understand the process, characterize the reservoirs, and explain the nature of the economic potential of the intervals. This study was designed as an attempt to model a specific fairway of flushing that rims the Delaware Basin portion of the greater Permian Basin and would require an extensive data collection effort from historical wells and studies in an attempt to characterize both the input rock properties and fluid characteristics.

Results

The investigation of ROZs required a multidisciplinary team. The science of lateral oil flushing has components of geochemistry, biochemistry, reservoir engineering, and geology, including tectonic stage reconstruction. This team gathered data from the selected San Andres formation fairway of interest consisting of well logs, formation tops, drill stem tests, core data, geological and hydrological studies. Essential data also came from earlier studies having to do with Capitan Reef hydrology, professional association compendia and their oil field studies, and regulatory agency-required oil and gas data reporting.

The results of the data collection formed the basis for a hydrological model simulation wherein modern hydrological conditions were used to calibrate the model in order to project back in geological time to the predominate period of entrapment flushing. The results of the model work were subject to a large number of assumptions but could be constrained by the observations of tilted oil water contacts, sulfur occurrences, water salinities, and other anecdotal data that, taken in aggregate, provides confidence of the model and flushing process.

Results of the study confirmed the presence of thick and extensive greenfield ROZs, i.e., where no main pay zones are present. The hydrodynamic modeling demonstrated that the mechanics of flushing are measured in units of tens to hundreds of feet (of movement) of water

per 1000 years. This agreed with independent, analytical calculations of piezometric head effects on oil/water contact tilts and attempts to model the process using modern first-principle physics and simulators.

The Artesia fairway was found to extend from the Northwest Shelf of New Mexico east to the Central Basin Platform and then south along the West side of the platform to Pecos county. The lateral limits of the fairway on the west side of the Central Basin Platform were defined as the San Andres shelf to basin transition on the basin side, and on the east platform side transition from the intertidal carbonate dominated faces to the evaporite dominated sabkhas facies tract.

In addition to horizontally dividing the trend based on facies and permeabilities, the trend was divided vertically into a number of different, stratigraphically distinct, intervals within the San Andres. The middle – upper San Andres "Judkins" interval has been identified as the "flow path". Careful investigation of the present hydrologic regime and of the hydrologic regime before the withdrawal of water for agriculture and water flooding of oil fields has allowed calculation of rock and water properties to put into models of water flow in past geologic time. The model calculates tilt in oil water contacts as they exist in a number of fields. It is determined that between 46 and 17.3 pore volumes of water have passed through the Artesia trend.

Identification of the Artesia fairway favorable for individual ROZ deposits should allow explorationists to focus exploratory efforts. Dissemination of information about ROZs through lectures and symposiums both locally and country wide has led to new CO_2 EOR projects targeting just ROZs, in addition to adding stratigraphic sections of ROZs to the CO_2 floods already underway in old producing fields of the Permian basin.

More information on the DOE research projects focused on ROZs can be found at http://www.netl.doe.gov/

Moving CO_2 EOR Offshore

The Gulf of Mexico (GOM) Federal Offshore Continental Shelf (OCS), an important domestic petroleum province, accounts for about 20 percent of total domestic crude oil production. Since reaching a peak of 1.54 million barrels a day (MMB/D) in 2003, the Gulf of Mexico's OCS oil production has declined to 1.23 MMB/D, as of mid-2013. While there is optimism that new discoveries in the deep and ultra-deep waters of the GOM OCS will reverse this decline, another option seems to offer additional promise—the application of CO_2 enhanced oil recovery.

The DOE recently completed a study titled "CO_2 EOR Offshore Resource Assessment" that examined the relationship between technology and recovery for CO_2 EOR applied in the GOM OCS.

Potential Benefits

The use of CO_2-EOR in the GOM OCS would provide numerous benefits, including:

- Increasing the volumes of economically viable domestic oil reserves and production, including adding significant Federal royalty and tax revenues;
- Providing a market for CO_2 emissions from Gulf Coast electric power and industrial plants, helping "buy-down" the costs of CO_2 capture; and
- Providing secure locations for storing CO_2.

The U.S. DOE already recognizes that offshore storage of CO_2 provides several key advantages, including:

- Locating sequestration sites away from heavily populated, onshore areas reduces the difficulty of establishing surface and mineral rights for storage sites;

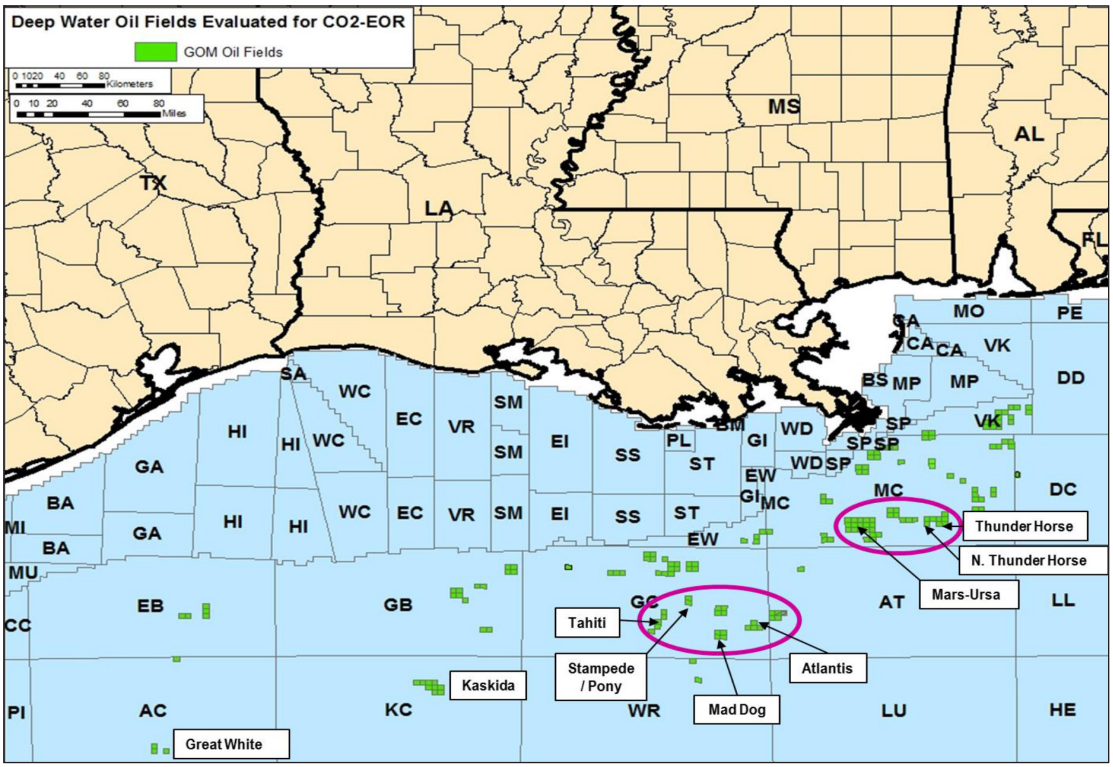

Figure 1. GOM OCS deep water oil fields with circled first order "anchor fields"

- Offshore storage reduces risks to underground sources of drinking water; and
- Offshore CO_2 pipelines could utilize already existing corridors and oil and gas infrastructure, thus reducing up-front capital costs.

Three distinct resource targets exist in the GOM OCS for CO_2-EOR: (1) mature, shallow-water oil fields; (2) more recently discovered, deep water oil fields; and (3) undiscovered oil fields, primarily in deep and ultra-deep waters. Figure 1 provides the location of the large deep water and "anchor" oil fields located in the Gulf of Mexico.

With "Next Generation" CO_2-EOR technology, the offshore GOM offers a substantial prize - - nearly 15 billion barrels of additional oil recovery and storage for 3.9 gigatons of CO_2 (equal to 40 years of CO_2 capture from 20 GW size coal-fired power plants), as shown in Table 1.

	Current CO_2-EOR Technology	**"Next Generation" CO_2-EOR Technology**
Oil Recovery	**(MMB)**	**(MMB)**
Shallow Water	390	3,260
Deep Water	80	2,100
Undiscovered	340	9,560
Total	**810**	**14,920**
CO_2 Demand	**(MMmt)**	**(MMmt)**
Shallow Water	150	720
Deep Water	30	580
Undiscovered	130	2,610
Total	**310**	**3,910**

Table 1. Economically viable oil recovery and CO_2 demand.

The estimates of oil recovery and CO_2 demand from applying CO_2-EOR to discovered shallow and deepwater GOM oil fields are based on reservoir-by-reservoir analyses employing a database of resevoir (e.g. pressure, temperature, oil properties, producing water, etc.) and reduced form models for estimating the recovery potential from CO_2-EOR. The estimates of oil recovery and CO_2 demand from applying CO_2-EOR to as yet undiscovered GOM oilfields are based on extrapolation of results from existing deep water oil fields to BOEM's assessment of undiscovered GOM OCS oil resources.

Worldwide CO_2 EOR Points the Way

While a number of near-shore offshore CO_2-EOR pilot projects were undertaken in the early 1980s, there is not yet a commercial-scale CO_2 flood in the U.S. offshore. In contrast, a number of significant offshore CO_2-EOR efforts are underway overseas:

- The CO_2-EOR project in the Lula Field, a super-giant deep water oil field in offshore Brazil, serves as a most valuable case study of using early application of advanced offshore CO_2-EOR technology.
- The Abu Dhabi National Oil Company (ADNOC) is planning a CO_2-flood in the Lower Zakum oil field in the offshore of Abu Dhabi using CO_2 captured from a steel plant in Mussafah, UAE.

- Vietnam and Malaysia have recently conducted offshore CO_2-EOR pilots in preparation for larger-scale use of this technology to increase oil recovery efficiency and provide storage for CO_2.

Finally, while the North Sea has over a dozen hydrocarbon miscible and immiscible offshore EOR projects underway, today the interest is substituting CO_2 for natural gas as the injectant. In preparation for expanded use of offshore CO_2-EOR, the UK recently established the Center for North Sea Enhanced Oil Recovery with CO_2 (CENSOR-CO_2) to help accelerate this option (see End Note).

DOE Study Assesses the Potential

The CO_2-EOR potential in the Gulf of Mexico is governed by three key factors:

- First is the performance level of CO_2-EOR technology. The study examines two distinct levels of CO_2-EOR technology - - Current and "Next Generation";
- Second is the cost of CO_2 delivered to the offshore oil field. The study uses $50 per metric ton (mt) (consisting of a CO_2 purchase price of $30/mt plus $20/mt for offshore CO_2 transportation); and
- Third is the world oil price. The study examines the CO_2-EOR and CO_2 storage potential using "today's" oil price of $90 per barrel and a future, higher oil price of $135 per barrel.

The study's in-depth, reservoir-by-reservoir analysis shows that the volumes of economically viable oil recovery and CO_2 demand vary by nearly an order of magnitude, depending on the efficiency and sophistication of available offshore CO_2-EOR technology.

- ***Current CO_2-EOR Technology***. With today's moderate performance CO_2-EOR technology (Current Technology), an oil price of $90/bbl, and a CO_2 cost of $50/mt, economically viable oil recovery and CO_2 demand from the GOM OCS are modest:
  - 810 million barrels of incremental oil, and
  - 310 million metric tons of CO_2 demand.
- ***"Next Generation" CO_2-EOR Technology***. Substituting higher performing "Next Generation" CO_2-EOR Technology (oil price of $90/bbl and CO_2 cost of $50/mt), the economically viable oil recovery and CO_2 demand from the GOM OCS increase by more than tenfold:
  - 14,920 million barrels of incremental oil, and
  - 3,910 million metric tons of CO_2 demand.

While "Next Generation" Technology improves oil recovery efficiency by about half, the great bulk of the impact is from the much greater number of offshore oil fields that become economically viable. The combinations of more efficient use of CO_2 and higher recovery per well are the main reasons for the sharp increase in the number of economically viable oil fields under "Next Generation" technology.

In reviewing these results, it is useful to recognize that a majority of the oil fields holding substantial original oil in-place (OOIP) were screened out as being too small or too lean for CO_2-EOR. Specifically, for the shallower water areas, 80 percent of the oil fields holding nearly half of the OOIP were screened out; for the deep water, half of the oil fields, holding about a

third of the resource were, screened out.

Higher oil prices of $135 per barrel (real $2012) would materially improve the oil recovery and CO_2 demand potential that would result from applying CO_2-EOR to GOM OCS oil fields.

Energy Information Administration's (EIA) Annual Energy Outlook 2013 projections indicate an oil price of $135/B (real) could be reached by year 2030. In addition, conversion of empty offshore natural gas pipelines to CO_2 transportation could lower delivered CO_2 costs by $10/mt or more. Most importantly, incentives for capturing and storing CO_2 with EOR could make large volumes of affordable, market-competitive Gulf Coast CO_2 supplies available for the GOM offshore EOR industry.

Timing

There is considerable urgency for implementing CO_2-EOR in the offshore oil fields of the Gulf of Mexico OCS. Most of the shallow water (less than 1,000 feet of water depth) GOM oil fields are mature and near abandonment, having produced 95 percent or more of their Original Proved Reserves. Once these fields are abandoned and their platforms removed, the costs of conducting CO_2-EOR or storing CO_2 in these oil fields increases significantly.

On the other hand, much of the oil resource in the deep waters of the GOM is in newly discovered (or still undiscovered) oil fields. As illustrated by the super-giant Lula oil field in the ultra-deep waters of offshore Brazil, early implementation of CO_2-EOR at newly discovered oil fields appears to offer significant economic benefits, including higher volumes of economically viable oil recovery and accelerated opportunities for storing CO_2.

End Note

Recently, the UK established the Centre for North Sea Enhanced Oil Recovery with CO_2 (CENSEOR-CO_2) to accelerate implementation of carbon capture and storage and unlock three billion barrels of "hard-to-reach" oil from the North Sea. The objectives of CENSEOR-CO_2 are to create a market for CO_2 captured from electric power plants and industrial plants and to increase oil recovery efficiency by up to 25 percent. The Centre, located in Edinburgh, Scotland, is funded by the Scottish Government matched by industry funding.

Similar and even larger benefits could be realized by undertaking CO_2-EOR in the offshore oil fields of the GOM. Important next steps would be to support the development of advanced "Next Generation" CO_2 enhanced oil recovery technology and to provide incentives for its timely application.

What DOE is Doing

The Department of Energy's R&D Program aims to reduce the technology and cost barriers to increasing recovery from mature conventional oil reservoirs. Several trends highlight the need for continued research into ways to improve recovery from conventional domestic oil reservoirs.

- Energy demand continues to grow, and the need to slow the growth in oil imports for economic and energy security reasons remains strong.
- Onshore domestic oil production is rising, but there are significant amounts of oil left in conventional reservoirs in mature oil fields.
- Economic extraction of these resources will require research to provide for a better understanding of the geologic nature of these reservoirs as well as new technologies for cost-effectively producing the oil.

The need for federal investment in scientific data collection and technology development is driven by the following facts:

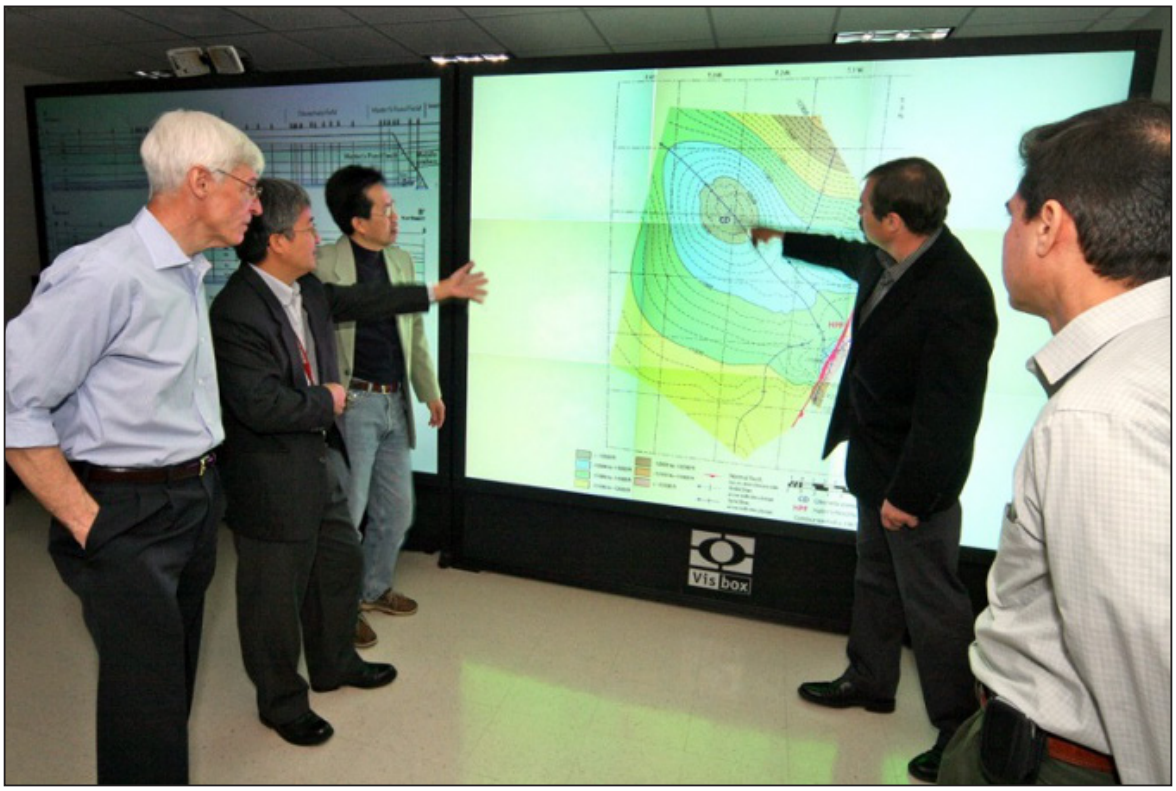

NETL is investigating the potential for recovering incremental oil from the Citronelle Field in Alabama using carbon dioxide EOR. The first stage is developing an improved understanding of the geology using state-of-the-art interpretation techniques. Fields like Citronelle can demonstrate the potential for recovering domestic oil using carbon dioxide captured from industrial sources.

NETL is demonstrating carbon dioxide flooding EOR in the Hall-Gurney field in Russell, Kansas, using carbon dioxide recovered from a nearby ethanol plant.

- While enhanced oil recovery has been successfully applied in some areas where circumstances are favorable (e.g., Permian Basin), in many other areas perceived risk keeps it just beyond reach. The development and demonstration of new EOR technologies and new ways to apply existing EOR technologies can help to accelerate its application.
- In mature fields that are the targets of EOR, small producers face challenges that are unique to their situation—low productivity wells, high water cuts, aging infrastructure and tight regulatory constraints. These operations are often low margin and are not targeted by the larger service companies' R&D efforts.

Currently there are 26 funded projects in petroleum R&D portion of NETL's program that are underway or have been recently completed. Of these, seven projects are directed at problems related specifically to CO_2 EOR. In addition to these extramural projects, an effort funded through Section 999 of the Energy Policy examined midcontinent reservoirs where circumstances preclude re-pressuring to minimum miscibility pressure. Another project looked at ways to increase the viscosity of injected CO_2 to improve sweep efficiency.

Together, these projects form a portfolio that is balanced and responsive to the issues facing operators. The data, technologies and tools developed through this portfolio will help industry make decisions and optimize operations in ways that will advance the goal of environmentally sustainable CO_2 EOR.

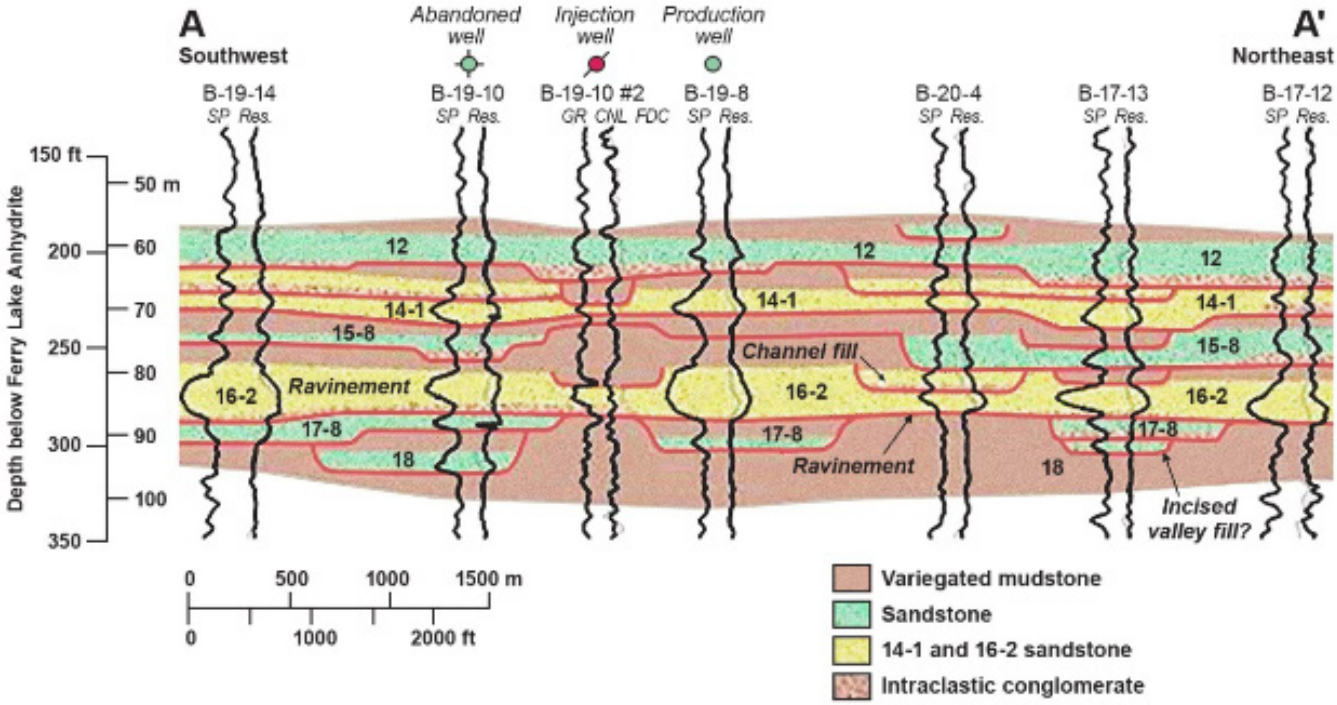

Geologic complexity in fields where CO_2 flooding is being studied.

NETL