TOPICAL REPORT NUMBER 28

FEBRUARY 2014

CLEAN COAL TECHNOLOGY

Greenidge Multi-Pollutant Control Demonstration Project

Cover Photo:

AES Greenidge Power Plant

U.S. DEPARTMENT OF ENERGY

CONSOL ENERGY

CLEAN COAL TECHNOLOGY

Greenidge Multi-Pollutant Control Demonstration Project

Executive Summary 4

Introduction 5

Background. 6

Host Site 7

Project Objectives 8

Technology Description. 9

Project Description 11

Results 13

Costs 14

Benefits 15

Bibliography 16

Acronyms and Abbreviations 17

Contacts 18

Executive Summary

The project was carried out by CONSOL Energy Inc. (CONSOL). Total project cost was $34.7 million, with the U.S. Department of Energy (DOE) providing 41 percent. The remaining 59 percent was provided by AES Greenidge LLC. The demonstration facility was located at the AES Greenidge Power Plant in Dresden, New York. The multi-pollutant control system, which occupies a total of approximately 0.4 acres of land, was installed and tested on AES Greenidge Unit 4, a 107-megawatt electric (MWe), 1953-vintage, tangentially-fired boiler. AES Greenidge was a merchant plant that normally fires high-sulfur eastern U.S. bituminous coal. It can also burn up to 10 percent (by heat content) biomass.

The objective of this project was to demonstrate a technology suite that can meet increasingly strict environmental regulations and that is applicable to smaller, older coal-fired plants. This type of technology was needed because retrofitting conventional technologies to these smaller, older plants is often impractical due to the relatively high capital cost per kilowatt. Furthermore, these plants are often space constrained.

The performance goals included reducing high-load emissions of nitrogen oxides (NO_x) to ≤0.10 pounds per million British thermal units (lb/MMBtu) and reducing sulfur dioxide (SO_2), sulfur trioxide (SO_3), hydrogen chloride (HCl), and hydrogen fluoride (HF) emissions by at least 95 percent. The mercury emissions were to be reduced by at least 90 percent. These reductions were to be achieved while the unit fired greater than 2 percent sulfur eastern U.S. bituminous coal and co-fired up to 10 percent biomass.

Construction was completed in late 2006, and startup followed immediately. The operational phase of the demonstration project continued until October 2008, and CONSOL's final report was accepted in May 2009.

The project team included CONSOL, AES Greenidge LLC, and Babcock Power Environmental Inc. (BPEI). CONSOL, as the Prime Participant, was responsible for managing the project, conducting tests, and evaluating the results. AES Greenidge LLC served as the host site and was responsible for co-funding, environmental permitting, and operating the demonstration plant. BPEI was the main technology supplier and was responsible for the engineering, procurement, and construction (EPC) of the demonstration facility. BPEI was a subcontractor to AES Greenidge. Overall project management was provided by DOE's National Energy Technology Laboratory (NETL).

The multi-pollutant control system consisted of a NO_xOUT CASCADE® hybrid selective non-catalytic reduction (SNCR) / selective catalytic reduction (SCR) system, a Turbosorp® circulating fluidized bed dry scrubbing (CFBDS) system, a baghouse, and an activated carbon injection (ACI) system. Combustion modifications were simultaneously installed by the plant owner outside the scope of this project. The SNCR system consists of multiple injection points at which urea ($CO(NH_2)_2$) is injected into the furnace to react with NO_x to form molecular nitrogen (N_2), carbon dioxide (CO_2), and water vapor. These reactions also result in the formation of ammonia (NH_3), which exits in the boiler flue gas and serves as the reagent for further NO_x reduction in the downstream SCR unit. The SCR is an "in-duct" design consisting of a single catalyst layer installed in a modified section of ductwork between the economizer and the air heater. When needed for mercury removal, the ACI system is used to inject activated carbon into the ductwork upstream of the dry scrubber. Hydrated lime ($Ca(OH)_2$) sorbent and humidification water are separately injected into the dry scrubber to remove SO_2 and other acid gases. The acid gases react with the hydrated lime to form dry solid byproducts, which are then separated from the flue gas in the baghouse.

Overall, the operation of the demonstration plant went smoothly with one exception: AES Greenidge experienced problems with periodic plugging of the SCR catalyst bed by large particle ash (LPA). The problem was ultimately solved by installing a screen to remove the LPA. The performance goals were met or exceeded with the exception of the target for NO_X emissions. The target was met for acceptance testing, but over the longer term it was necessary to accept slightly higher NO_X emissions in order to maintain suitable combustion characteristics for routine operation.

Introduction

Coal is both plentiful and affordable in the United States and is being looked upon to continue to fuel a large portion of electricity generation as demand increases. Our Nation's energy security and environmental stability depend on the resolution of environmental concerns associated with continued coal use. Cost-effective and efficient technologies developed to ensure the environmentally clean utilization of this resource have been designated as "clean coal technologies."

Clean coal technology research and development (R&D) began in the 1970s. Many promising technologies had emerged by the 1980s. These had progressed through the laboratory, pilot, and proof-of-concept scales but were not implemented due to the financial and technical risks associated with a first-of-a-kind commercial-scale plant. A pathway to facilitate the further development of these technologies was initiated by Congress and implemented by DOE in 1985 with the creation of the Clean Coal Technology Demonstration Program (CCTDP). The CCTDP forged cost-sharing partnerships between DOE, non-federal public entities, technology suppliers, and clean coal technology users to reduce the financial and technical risks preventing commercial-scale deployment.

Building on the successes of CCTDP, DOE implemented the Power Plant Improvement Initiative (PPII) in 2001 to focus on enhancing the reliability of the Nation's power supply. PPII was followed by the Clean Coal Power Initiative (CCPI) in 2002.

The CCPI is an industry/government cost-shared partnership program initiated in 2002 that furthers efficient clean coal technologies for use in new and existing U.S. electric power generating facilities. CCPI is a technology demonstration program implemented through a series of solicitations (rounds) that target priority areas of interest to meet DOE's Roadmap goals. Technologies emerging from the program will help U.S. coal-fired electricity generating plants to meet both existing environmental objectives as well as those emerging in the near future. CCPI is planned and managed by the DOE Office of Fossil Energy and implemented NETL.

CCPI Round 1 (CCPI-1) criteria for candidate projects were very broad in that the solicitation was open to "any technology advancement related to coal-based power generation that results in efficiency, environmental, and economic improvement compared to currently available state-of-the-art alternatives." CCPI Round 2 (CCPI-2) encouraged proposals to demonstrate advances in coal gasification systems, technologies that permit improved management of carbon emissions, and advancements that reduce mercury (Hg) and other power plant emissions. CCPI Round 3 (CCPI-3) required projects that could demonstrate the capture, recovery, and sequestration or beneficial use of CO_2 from coal-fired power plants.

Future CCPI rounds will build upon the successes of previous rounds, demonstrating advanced technologies that strengthen the Nation's energy and economic security with minimal impacts to the environment and consumer.

The PPII comprised a single round in which four projects were successfully completed. The total value of these projects is $71.5 million, with DOE contributing $31.5 million or 44.6 percent. This report describes one of these projects, the Greenidge Multi-Pollutant Control Project.

Background

The demand for electricity in the U.S. is projected to increase significantly over the next two decades. Because coal is both plentiful and affordable, the generation of electricity from this abundant resource is being looked upon to continue to account for a significant share of total generation. In order to further capitalize on the energy security and economic stability provided by coal, a new generation of technologies must be developed to address the environmental concerns associated with coal. These capabilities must also be both cost-effective and efficient to support economic growth. This new generation of technologies has been designated "clean coal technologies."

R&D of clean coal technologies began in the 1970s, and many promising technologies had emerged by the 1980s. As these technologies were unproven in a commercial setting, their financial and technical risks prevented the implementation and subsequent benefits of using these new capabilities to further utilize our nation's coal resources for electricity generation. A pathway was needed to prove the technical performance and competitive cost capabilities of a technology in a commercial setting to reduce the risk of implementation and to facilitate the technology's acceptance. This pathway was initiated by Congress and implemented by the DOE in 1985 with the creation of the CCTDP. The CCTDP forged cost-sharing partnerships among DOE, non-federal public entities, and technology suppliers and users who were involved in the implementation of clean coal technologies. These partnerships yielded a reduction in the financial and technical risks that were holding back the commercial implementation of clean coal technologies. As a condition of participation, CCTDP demonstrations were required to be conducted at a scale and in an operational environment sufficient to determine their potential for satisfying the technical, economic, and environmental needs of the marketplace.

Building on the successes of the CCTDP, DOE initiated the PPII in 2001 to implement demonstrations specifically addressing issues regarding electric power reliability. PPII was established on October 11, 2000, under United States Public Law 106-291. The purpose of PPII was the demonstration on a commercial scale of energy-related technologies that would assure the reliability of the Nation's energy supply from electric generating facilities by advancing the efficiency, environmental performance, and cost-competitiveness of coal-fired capacity. Additional guidance from the U.S. Congress provided that PPII would apply to both existing and new power plants and would demonstrate advanced coal-based technologies. A major driver for PPII was an increasing concern over the adequacy of the nation's power supplies. During the two previous years, 1999 and 2000, a series of rolling blackouts and brownouts had been experienced in several parts of the United States, including the West Coast and parts of the Northeast. These blackouts and brownouts were caused in large part by sharp rises in demand for electricity and lagging construction of new power plants.

PPII was funded by US$95 million in previously appropriated funds. Building on the successes of CCTDP, DOE implemented the PPII which was followed by the CCPI in 2002. One of the projects carried out under the PPII, Greenidge Multi-Pollutant Control Project, is the topic of this report.

The CCPI is an industry/government cost-shared partnership program that furthers efficient clean coal technologies for use in new and existing U.S. electric power generating facilities. CCPI is a technology demonstration program implemented through a series of solicitations (rounds) that target priority areas of interest to meet DOE's Roadmap goals. Technologies emerging from the program will help U.S. coal-fired electricity generating plants to meet both existing environmental objectives as well as those emerging in the near future. CCPI is planned and managed by the DOE Office of Fossil Energy (FE) and implemented by NETL.

CCPI-1 criteria for candidate projects were very broad in that the solicitation was open to "any technology advancement related to coal-based power generation that results in efficiency, environmental, and economic improvement compared to currently available state-of-the-art alternatives." CCPI-2 encouraged proposals

to demonstrate advances in coal gasification systems, technologies that permit improved management of carbon emissions, and advancements that reduce mercury and other power plant emissions. CCPI-3 required projects that could demonstrate the capture, recovery, and sequestration or beneficial use of carbon dioxide from coal-fired power plants. Future CCPI rounds will build upon the successes of previous rounds, demonstrating technologies that strengthen the Nation's energy security with minimal environmental impact.

As stated earlier, the major emphasis of the PPII program was to increase the reliability of the Nation's energy supply without compromising the Nation's environmental goals. Domestic coal-fired electricity generating units with capacities ranging from 50–300 MW were becoming increasingly vulnerable to either retirement or possible capacity derating due to fuel switching as a result of progressively tighter state and federal environmental regulations. At the time, there were approximately 400 units in this size range that were equipped with neither flue gas desulfurization (FGD) nor SCR technologies; for many of these units, it would be difficult or impossible to install an SCR and wet FGD scrubber because of economic limitations and/or space constraints. The "Greenidge Multi-Pollutant Control Project" was selected under the PPII program to demonstrate a cost-effective emissions control option for these smaller units, which represent more than 55 GW of installed generating capacity. Following protracted negotiations, the Cooperative Agreement was awarded on May 19, 2006, with design and construction activities already underway. The proposal was submitted by CONSOL Energy Inc. (CONSOL) with AES Greenidge LLC and BPEI rounding out the core project team. The host site, AES Greenidge Unit 4, was typical of these smaller units with a net capacity of 107 MWe.

Host Site

The AES Greenidge power plant is located on the western shore of Seneca Lake in Dresden, Yates County, New York. The plant was removed from service in March 2011, but at the time of, and following the project, it operated as a merchant plant that sold its electricity to the New York Independent System Operator's day-ahead and hour-ahead markets. The plant comprises two units, Units 3 and 4. Units 1 and 2 two have been dismantled, although the stacks are still standing. Unit 3 is rated at 54 MW (net) and is supplied by Boilers 4 and 5. It is fired with eastern bituminous coal. Unit 4 is rated at 107 MW (net) and is supplied by Boiler 6.

Unit 4 (Boiler 6) was the host unit for the project. It is a 107 MWe, 1953-vintage, reheat unit that is reasonably representative of the large existing fleet of smaller coal-fired units discussed above. Its primary fuel was eastern U.S. bituminous coal, but it also occasionally burned waste wood at up to 10 percent of its heat input. The use of wood provided a potential economic benefit, diversified the plant's fuel supply, and reduced SO_2 and NO_X emissions. Fuel was delivered by rail or truck. Boiler 6 is a tangentially-fired, dry bottom boiler that was placed in service in 1953. It is a balanced draft boiler served by two forced draft fans and two induced draft fans. Steam is supplied to Unit 4 at 1465 psig and 1005 °F. The reheat temperature is also 1005 °F. The unit was equipped with a natural gas reburn system in the 1990s, but the system was no longer in use when this project commenced. The boiler also was retrofitted with separated overfire air (SOFA) ports, which enabled it to achieve a full-load NO_x emission rate of about 0.3 lb/MMBtu. Particulate matter was controlled with a cold side electrostatic precipitator. Fly ash was hauled to a landfill located adjacent to the plant site. There was no SO_2 control system prior to the project. The permit limit of 3.8 pounds per million Btu (lb/MMBtu) was met by firing medium-sulfur coal and co-firing biomass.

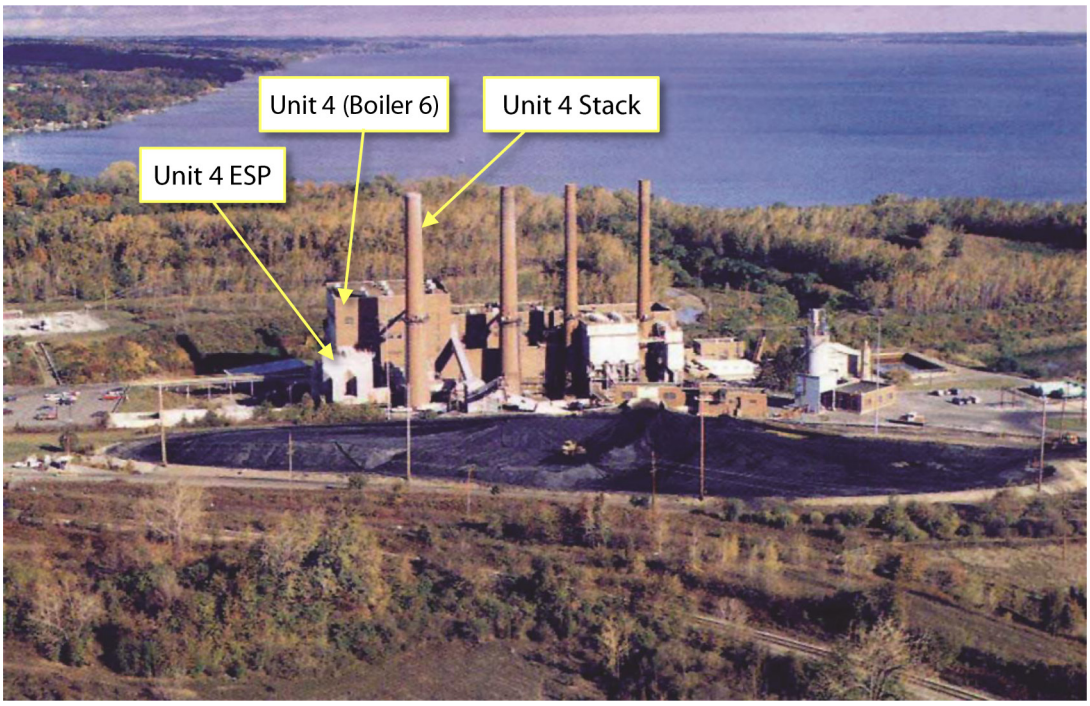

Aerial photograph of the AES Greenidge plant, as viewed from the south prior to the Multi-Pollutant Control Project.

In addition to the multi-pollutant control system that was installed under the PPII project, AES Greenidge simultaneously carried out several other projects to improve performance and reliability for Unit 4. These included a major turbine overhaul, replacement of the unit's high-temperature superheater elements, and upgrades to the unit's distributed control system, air preheaters, and ash handling system. AES Greenidge also upgraded the Boiler 6 combustion system, including both its firing system and its SOFA system, to help optimize the performance of the hybrid SNCR/SCR process installed under the PPII project.

Project Objectives

The overall goal of the Greenidge Multi-Pollutant Control Project was to demonstrate a cost-effective multi-pollutant control system that would achieve deep reductions in NO_X, SO_2, acid gas (SO_3, HCl, and HF), particulate matter, and Hg emissions while the unit was firing >2 percent-sulfur eastern U.S. bituminous coal and co-firing biomass at up to 10 percent of its total heat input. Specific goals were to demonstrate:

- That the combination of the hybrid SNCR/SCR system and the combustion modifications (installed outside the scope of the PPII project) could reduce high-load NO_x emissions to ≤0.10 lb/MMBtu.
- That the Turbosorp® CFBDS system could achieve at least 95 percent SO_2 removal while Unit 4 fired coal with a sulfur content greater than 2 percent and while it co-fired biomass at up to 10 percent of the total heat input.
- That the Turbosorp® CFBDS system also could reduce emissions of acid gases (i.e., SO_3, HCl, and HF) by more than 95 percent.
- That at least 90 percent of the mercury in the coal is removed by the combined effects of the hybrid SNCR/SCR system, Turbosorp® CFBDS system (including baghouse), and activated carbon injection.

- That the performance and economics of the multi-pollutant control system prove the systems suitability for meeting the emission control requirements of boilers in the 50 MWe to 600 MWe range.

Technology Description

The technology demonstrated in this project is actually a suite of technologies that are installed to sequentially treat the flue gas. They are arranged such that they act synergistically. Although the low-NO_x firing system is key part of the suite, it was installed outside the scope of the PPII project. The technologies that were part of the project include the NO_xOUT Cascade® system, which is a hybrid selective non-catalytic reduction/ selective catalytic reduction (SNCR/SCR) system, and the Turbosorp® CFBDS system, which includes a baghouse and an activated carbon injection system. The overall system was designed to effectively reduce emissions of NO_X, SO_2, Hg, acidic gases, and particulate matter.

NO_x formation in the furnace combustion zone is held in check by the low-NO_x firing system. The SNCR process takes place above the combustion zone, where aqueous urea is injected at multiple points. At the temperatures in the upper furnace, the urea reacts with NO_x to form molecular nitrogen (N_2) and water vapor. Ammonia (NH_3) also is formed as a byproduct of the SNCR process. When SNCR is used alone its effectiveness is limited by the quantity of NH_3 that is permitted in the flue gas (ammonia slip), thus limiting the amount of NO_x removal that can be achieved. In the demonstration technology, ammonia slip is actually desired for use in the downstream in-duct SCR reactor, allowing the SNCR process to achieve a greater level of NO_x reduction in the furnace.

The flue gas exiting the furnace, which contains unreacted NO_x and NH_3 produced by the SNCR process, next enters an in-duct SCR reactor. The SCR reactor is composed of a single catalyst layer installed between the unit's economizer and air preheater. The NO_x in the flue gas reacts with the ammonia in the presence of the catalyst to form N_2 and water vapor. A Delta Wing™ static mixing technology is installed in the ductwork upstream of the SCR reactor to ensure optimum mixing of the flue gas constituents to maximize conversion efficiency. The SCR catalyst also oxidizes a portion of the elemental Hg in the flue gas, enhancing its removal further downstream.

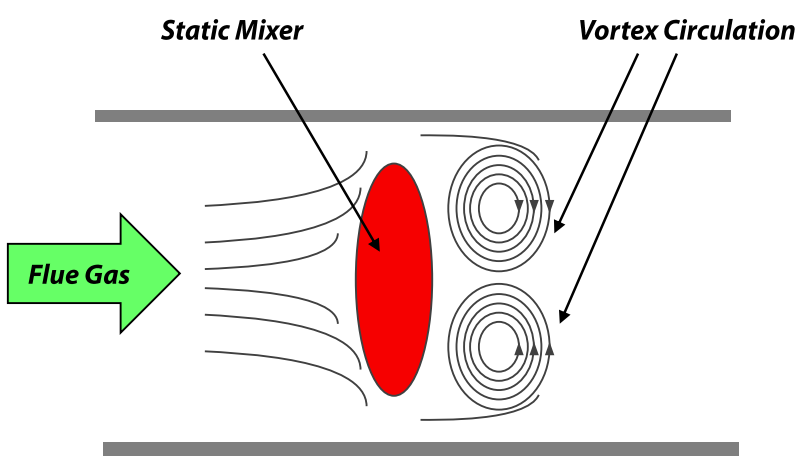

Conceptual illustration of the Delta Wing™ static mixing technology.

The flue gas exiting the SCR reactor passes through the plant's existing air preheater and is sent to the Turbosorp® CFBDS system for removal of SO_2, other acid gases, mercury, and particulate matter. If necessary, powdered activated carbon is injected into the flue gas duct upstream of the Turbosorp® CFBDS system to aid in mercury removal. Water, fresh hydrated lime, and recycled solids from the baghouse are separately injected into an absorber vessel, where the acid gas components of the flue gas (SO_2, SO_3, HCl, and HF) react with the hydrated lime to form dry solid products. After exiting the absorber vessel, these dry solids are separated from the flue gas in a conventional baghouse which is an integral part of the Turbosorp® CFBDS system. The bulk of these solids are recycled to the absorber vessel to maximize reagent utilization and acid gas removal. Since the existing ID fans lacked the capacity to overcome the pressure drop resulting from the installation of the SCR and Turbosorp® CFBDS system, a booster fan was needed for this project. Depending on fan capacity in future installations, a booster fan may not be required.

Mercury removal in the Turbosorp® CFBDS system is aided by the Hg oxidation that occurs in the SCR. Although an activated carbon injection system was installed for the Greenidge project, the performance goal of >90 percent mercury capture was achieved without the use of any activated carbon. For future installations, the need for activated carbon injection will be evaluated on a case-by-case basis, depending on the coal type and required level of mercury reduction.

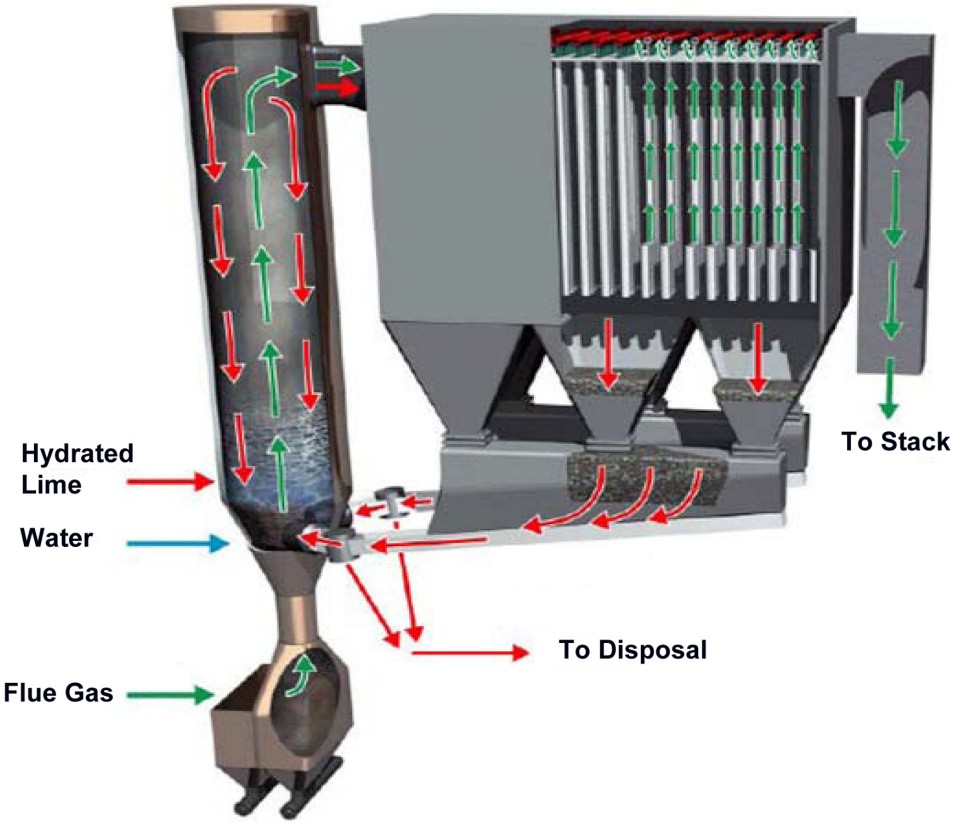

Turbosorp® CFBDS system.

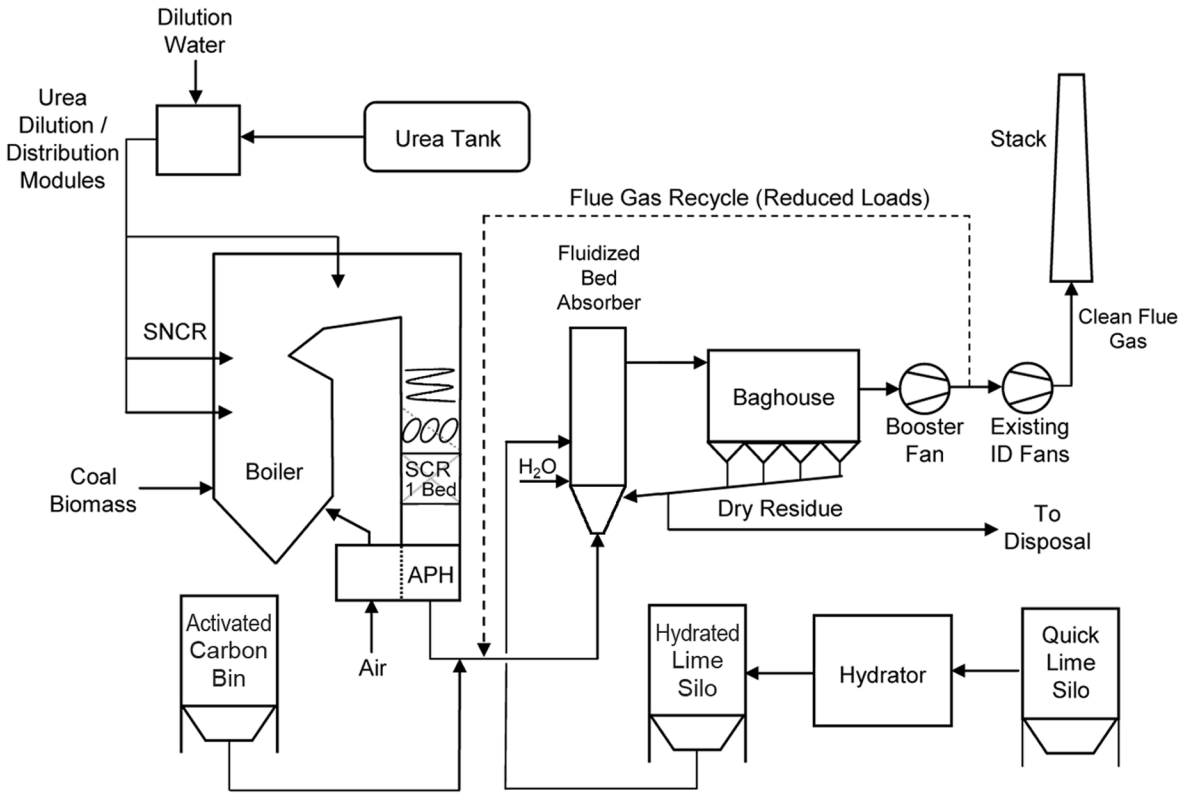

Schematic of the multi-pollutant control process demonstrated at AES Greenidge Unit 4.

The hydrated lime used in the Turbosorp® CFBDS system can be either purchased or hydrated on site from quick lime, depending upon economics and other supply considerations. A hydrator was installed as part of the Greenidge Multi-Pollutant Control Project for use in producing hydrated lime on site.

Project Description

The project involved the engineering, procurement, and construction of the technologies that comprise the multi-pollutant control system. These are the NO_xOUT CASCADE® system, ACI system, and the Turbosorp® CFBDS system. Also included in the project activities were permitting, startup, operation, and testing of the multi-pollutant control system. As discussed above, for the technology to achieve the targeted NO_x emissions rate, a low NO_x firing system is also needed. This was installed by AES Greenidge outside the scope of the demonstration project. AES Greenidge Unit 4 was required to reduce its NO_x and SO_2 emissions, repower, or retire under a consent decree with the State of New York. The multi-pollutant control system was selected due to its lower capital cost and space requirements when compared with conventional air emissions control retrofit technologies.

The project was carried out under a Cooperative Agreement with DOE. The total project cost was $34,740,803 of which $14,341,423 (41.3 percent) was provided by DOE and the balance was provided by AES Greenidge. The Cooperative Agreement was signed on May 19, 2006. AES Greenidge had planned a major outage during October and November of 2006 for reasons

unrelated to the project. In order to minimize disruptions for the project, the tie-ins for the multi-pollutant control system were made during the outage and well before the Cooperative Agreement was signed. (In such cases, allowable expenses are reimbursed by DOE after the Cooperative Agreement is signed. If the Cooperative Agreement is not signed, no reimbursement is made.)

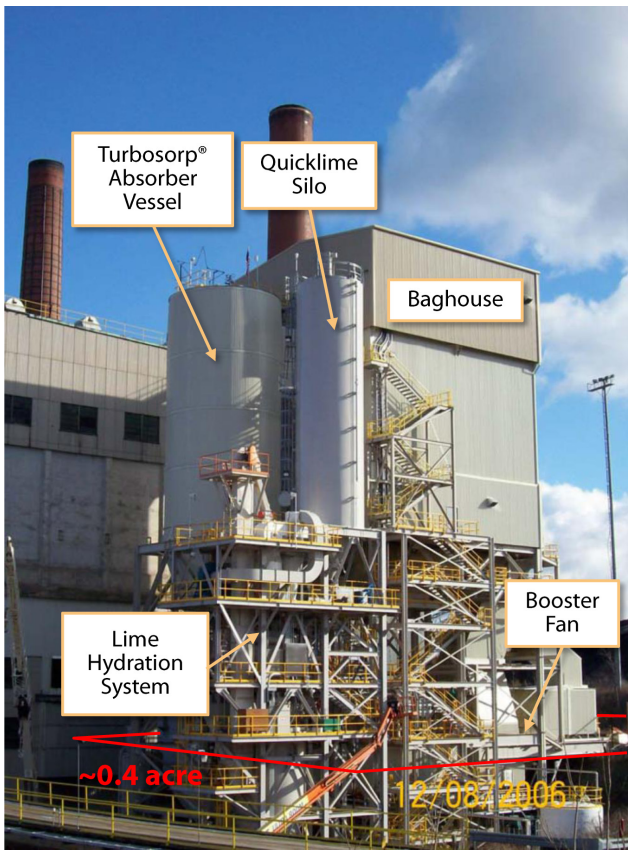

Turbosorp® CFBDS system including ancillary equipment.

DOE, through the National Energy Technology Laboratory, had oversight of the work done under the Cooperative Agreement. CONSOL Energy Inc. was the prime contractor to DOE under the Cooperative Agreement. AES Greenidge was responsible for site management and operation of the demonstration facility under a subcontract to CONSOL. BPEI was the engineering, procurement, and construction subcontractor to AES Greenidge and supplied the SCR and Turbosorp® CFBDS systems. The NO_xOUT CASCADE® technology was supplied by Fuel Tech under subcontract to BPEI.

Commissioning of the multi-pollutant control system was completed in early 2007, and this was followed by approximately eighteen months of operational testing, which concluded in October 2008. As is normal with new installations some problems were encountered and, in general, were routinely solved with a few exceptions.

Several problems occurred with the lime hydration system during start-up and operation. The majority of these occurred in the hydrated lime milling and classification system. Early on several episodes of plugging occurred in the hydrated lime classification loop. It was determined that modifications to the system were required to prevent excessive overflow of milk of lime. The system originally included a wet scrubber to remove particulate matter from the hydrator exhaust gas as well as a milk of lime circuit that was partially fed by the scrubber bottom liquid. These circuits were eliminated from the hydration system and the exhaust was routed to the Turbosorp® CFBDS system. Several other minor equipment and operational changes reduced the severity of the plugging problem.

A flue gas recirculation system was installed to return flue gas to the absorber to maintain sufficient velocity in the fluidized bed for the Turbosorp® CFBDS system to operate at low load. The booster fan was installed close to, and upstream of, the existing induced draft (ID) fans. To avoid moving the existing fans, the off-take for the recirculation stream was installed between the booster fan discharge and the suction of the existing fans. This resulted in unstable operation at low flows. Prior to the project, the unit minimum load was 37 MWnet. Due to the instability, the unit minimum load was increased to 45 MWnet, resulting in a loss of 8 MW of turn-down capability. Hindsight suggests that installing new, larger-capacity ID fans likely would have been preferable to installing the booster fan.

The most substantial problem encountered during operation of the multi-pollutant control system was that the boiler produced some large particle ash (LPA) which tended to plug the SCR catalyst. This initially required frequent outages to clean the LPA from the catalyst. Since the SCR catalyst was installed in a vertical section

of ductwork with a downward gas flow, resolving the LPA problem presented some difficulty. After several attempts, an LPA removal system including a sloped screen, sootblowers, and vacuum ports was installed. This significantly reduced the severity of the problem.

At the completion of the project, AES Greenidge continued to operate the multi-pollutant control system, and it continued to meet the terms of their consent decree with the State of New York, until Unit 4 was removed from service in March 2011.

Results

As previously stated, the goals of this project were to demonstrate that the multi-pollutant control system could reduce NO_x emissions to 0.10 lb/MMBtu or less (when combined with the low-NO_x combustion system installed outside the scope of the project), capture more than 95 percent of SO_2 and acid gases (SO_3, HCl, HF) when the unit was firing coal with a sulfur content of greater than two percent, and capture at least 90 percent of the mercury from the coal. The multi-pollutant control system's performance was evaluated over an 18-month period following start-up in early 2007. The unit fired up to five percent biomass for two test campaigns during this period.

NO_x

The goal for high-load NO_x emissions was met during the short-term acceptance tests, but the multi-pollutant control system was unable to meet this goal during longer-term operation while simultaneously maintaining acceptable combustion characteristics, sufficiently high steam temperatures, and sufficiently low ammonia slip for routine operation. Nevertheless, long-term NO_x emissions did meet the unit's permitted emission rate of 0.15 lb/MMBtu, averaging 0.14 lb/MMBtu. Overall NO_x emissions were reduced by 52 percent compared to pre-project levels.

Mercury and Air Toxics Standards (MATS)

The demonstration of the multi-pollutant control system was intended to prove that the system is capable of deep emission reductions. The demonstration period ended in October 2008, and the final report was issued in April 2009. In February 2012 the Mercury and Air Toxics Standards (MATS), which require deep reductions in certain emissions from coal- and oil-fired power plants, were published in the Federal Register. Although MATS had not yet been proposed when this project was conducted, the multi-pollutant control technology that was demonstrated provides an option for existing coal-fired units to meet MATS requirements. In short, MATS sets strict emission limits for mercury, particulate matter (which is a surrogate for non-mercury metals), and HCl (which is a surrogate for acid gases) for coal- and oil-fired units with a generating capacity greater than 25 MW. Units can comply with an SO_2 emissions limit as an alternative to the HCl limit and with emissions limits for individual metals as an alternative to the particulate matter limit. In the case of coal-fired units, separate limits are provided for two coal types and for IGCC units.

Particulate Matter (PM)

During the course of the project the average particulate matter (PM) loading at the exit of the air preheater was 5.81 lb/MMBtu, and this loading was further increased by the introduction of substantial quantities of sorbent and dry scrubber reaction products in the Turbosorp® CFBDS system. Nevertheless, the PM loading at the stack (exit of the baghouse) was consistently less than 0.001 lb/MMBtu throughout the demonstration period. No measurements were taken for individual toxic trace metals since MATS was not promulgated at the time this project was conducted. However, the technology demonstrated its ability to meet this standard since total filterable particulate emissions can serve as a surrogate for toxic metals. The MATS standard for existing units can be met by maintaining total PM emissions below 0.03 lb/MMBtu for all coal types. Thus, the technology consistently held PM emissions to one thirtieth of the level required to meet the standard for toxic metals.

Acid Gases and SO_2

As discussed above, the project strove to capture at least 95 percent of the SO_2 and other acid gases present in the flue gas using the Turbosorp® CFBDS system. During long-term testing, the Turbosorp® CFBDS system achieved an average SO_2 removal of 96.3 percent while holding emissions to 0.134 lb/MMBtu. The results during the guarantee tests were 96.0 percent removal with emission levels held to 0.146 lb/mmBtu. HCl removal averaged at least 96 percent during several series of tests. Concentrations of HF were at or below detection levels in the stack gas. Therefore, no valid conclusions can be drawn with respect to HF removal. The Turbosorp® CFBDS system also consistently showed SO_3 removal rates in excess of 95 percent when the SO_3 concentration at the inlet to the absorber exceeded 12 ppmvd. (There were a number of measurements in which less than 95 percent removal of SO_3 was calculated. However, in all such cases, scrubber inlet concentrations were below 12 ppmvd, resulting in outlet concentrations near or below the detection limit.) The only acid gas regulated under the MATS is HCl. The limit for HCl can be met using SO_2 emissions as a surrogate. In order to meet the MATS for HCl for existing plants, SO_2 emissions must be 0.2 lb/MMBtu or less for all coal types. As with particulate matter (toxic metals), the technology suite demonstrated at AES Greenidge can readily meet the MATS requirement for SO_2 (HCl) emissions for existing coal-fired units.

Hg

During the guarantee tests, mercury emissions were held to an average level of 0.38 pounds per trillion Btu (lb/TBtu), and during long-term operation Hg emissions averaged less than 0.114 lb/TBtu. These levels represented removal rates well over the 90 percent goal, with some tests showing removal rates over 99 percent. MATS for existing plants requires that Hg emissions be limited to no more than 4.0 lb/TBtu for plants firing low rank virgin coal and no more than 1.2 lb/TBtu for plants firing other coals (such as the eastern U.S. bituminous coal that was fired during the tests at AES Greenidge). As with other pollutants, the multi-pollutant control system demonstrated the ability to meet the stringent Hg emission limits required by MATS.

Costs

In its final report, the Participant presented capital and operating costs using data obtained during the project. These costs are based on a 107 MWnet plant fired with a 2.5 percent bituminous coal. An 80 percent capacity factor was assumed, and the costs are presented in 2005 dollars, the year that work on the project commenced.

Total capital costs were estimated at $37.3 million or $349/kWnet. This total includes $12.2 million ($114/kWnet) for the hybrid NO_x control system, $24.5 million ($229/kWnet) for the CFBDS and $0.6 million ($6/kWnet) for the activated carbon injection system. The total costs are estimated to be 40 percent less than those for a conventional wet FGD scrubber and a full SCR system.

Fixed operating costs were also estimated and include operating and maintenance labor, maintenance supplies, and administrative costs. The total for these categories was $880,000 per year or $1.18 per MWh.

Variable operating costs were estimated at $5.08 million per year or $6.77 per MWh based on actual performance. Expenses included in the variable operating costs included pebble lime, waste disposal, electricity, urea, catalyst, replacement of baghouse bags and cages, compressed air and process water. The greatest expense was for pebble lime, which contributed over 55 percent of the total.

Benefits

When this project was conducted it appeared that nearly one-fifth of the U.S. coal-fired generating capacity could be facing either retirement or possible capacity derating due to fuel switching as a result of progressively tighter environmental regulation. Conventional emission control technologies such as scrubbers and SCRs that are cost-effective on larger coal-fired plants are often not a viable option for these smaller facilities due to the constraints imposed by capital costs, maintenance requirements, and available space. Several years after the project ended, MATS was promulgated, imposing strict limits on emissions of mercury, acid gases, and particulate matter from coal-fired units. This rule is forcing many uncontrolled units to either retrofit, switch fuels, or retire. The Greenidge Multi-Pollutant Control Project demonstrated an emissions control system that can enable smaller coal-fired units to achieve MATS compliance at a reduced cost, potentially allowing them to extend their service life. The Participant estimated the overall capital cost of the system to be 40 percent less the capital cost of a conventional SCR and wet FGD scrubber. Additionally, the small footprint requirement of less than 0.4 acres allows the multi-pollutant technology to be installed in some power plants that lack sufficient space for more conventional pollution controls.

Bibliography

Connell, Daniel P. "Greenidge Multi-Pollutant Control Project, Final Public Design Report." January 2009. http://www.netl.doe.gov/File%20Library/Research/Coal/major%20demonstrations/ppii/greenidge/Greenidge-Final-Public-Design-Report.pdf.

Connell, Daniel. P. "Greenidge Multi-Pollutant Control Project - Quarterly Progress Report for Work Performed During the Period July 1, 2008, to September 30, 2008," November, 2008. http://www.netl.doe.gov/File%20Library/Research/Coal/major%20demonstrations/ppii/greenidge/Q093008.pdf.

U.S. Department of Energy, Office of Fossil Energy, National Energy Technology Laboratory. "Greenidge Multi-Pollutant Control," Project Brief, April 2009. http://www.netl.doe.gov/File%20Library/Research/Coal/major%20demonstrations/ppii/greenidge/GreenidgeProjectSummary.pdf.

U.S. Department of Energy, Office of Fossil Energy, National Energy Technology Laboratory. "Greenidge Multi-Pollutant Control," Project Fact Sheet, January 2009. http://www.netl.doe.gov/File%20Library/Research/Coal/major%20demonstrations/ppii/greenidge/Proj408.pdf.

Connell, Daniel. P. "Greenidge Multi-Pollutant Control Project - Final Report of Work Performed May 19, 2006 – October 18, 2008", http://www.netl.doe.gov/File%20Library/Research/Coal/major%20demonstrations/ppii/greenidge/GreenidgeProjectFinalReport-5-27-09.pdf.

Acronyms and Abbreviations

ACI . . . . . .Activated Carbon Injection

BPEI . . . . . .Babcock Power Environmental Inc.

$Ca(OH)_2$ . . . . . .Hydrated lime

CCPI . . . . . .Clean Coal Power Initiative

CCTDP . . . . . .Clean Coal Technology Demonstration Program

CFBDS . . . . . .Circulating Fluidized Bed Dry Scrubber

CONSOL . . . . . .CONSOL Energy Inc.

CO_2 . . . . . .Carbon dioxide

$CO(NH_2)_2$ . . . . . .Urea

DOE . . . . . .Department of Energy

EPC . . . . . .Engineering, procurement, and construction

ESP . . . . . .Electrostatic precipitator

FE . . . . . .DOE Office of Fossil Energy

FGD . . . . . .Flue Gas Desulfurization

HCl . . . . . .Hydrogen chloride

HF . . . . . .Hydrogen fluoride

Hg. . . . . .Mercury

MATS . . . . . .Mercury and Air Toxics Standard

MMBtu . . . . . .Million British thermal units

NY. . . . . .New York

MW. . . . . .Megawatts

MWe . . . . . .Megawatts (electrical)

NETL . . . . . .National Energy Technology Laboratory

NH_3. . . . . .Ammonia

N_2 . . . . . .Molecular nitrogen

NO_x. . . . . .Nitrogen oxides

PM . . . . . .Particulate matter

$PM_{2.5}$. . . . . .Particulate matter less than 2.5 microns in diameter

ppmvd . . . . . .Parts per million volume, dry basis

PPII . . . . . .Power Plant Improvement Initiative

R&D . . . . . .Research and development

SCR. . . . . .Selective Catalytic Reduction

SNCR . . . . . .Selective Non Catalytic Reduction

SO_2 . . . . . .Sulfur dioxide

SO_3 . . . . . .Sulfur trioxide

TBtu . . . . . .Trillion British Thermal Units

Contacts

D. P. Connell, Principal Investigator
CONSOL Energy Inc.
Research & Development
4000 Brownsville Road
South Park, PA 15129-9566
412-854-6559
danielconnell@consolenergy.com

Michael Knaggs
Office of Major Demonstration Projects
NETL
Work Phone: 304-285-4926
Work Phone Alternate: 412-386-4081
Cell Phone: 304-216-1613
Fax: 304-285-4216
Office/Mail: 39-322 M/S:P03B
Michael.Knaggs@netl.doe.gov

National Energy Technology Laboratory

1450 Queen Avenue SW
Albany, OR 97321-2198
541-967-5892

420 L Street, Suite 305
Anchorage, AK 99501
907-271-3618

3610 Collins Ferry Road
P.O. Box 880
Morgantown, WV 26507-0880
304-285-4764

626 Cochrans Mill Road
P.O. Box 10940
Pittsburgh, PA 15236-0940
412-386-4687

13131 Dairy Ashford, Suite 225
Sugar Land, TX 77478
281-494-2516

Visit the NETL website at:
www.netl.doe.gov

Customer Service:
1-800-553-7681

U.S. DEPARTMENT OF ENERGY | Office of Fossil Energy

Printed in the United States on recycled paper

February 2014