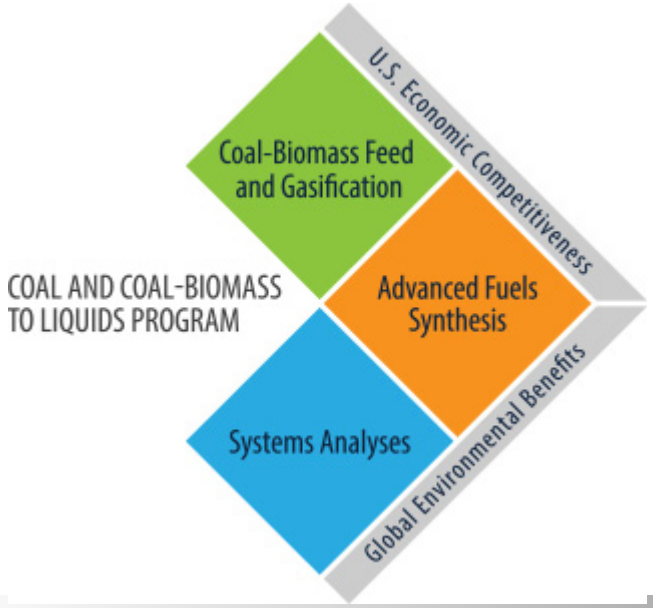

Overview of Coal and Coal-Biomass to Liquids (C&CBTL) Program

Jenny B. Tennant

Technology Manager, C&CBTL

December 2014

Coal and Coal-Biomass to Liquids Slide Library

Table of Contents

Introduction to CTL

Operating & Planned CTL & CBTL Plants

DOE/NETL Program Overview

Project Summaries

NETL Office of Research & Development Summary

Systems Analysis CBTL Focused Activities

Introduction To Coal-to-Liquids (CTL)

Products from Coal-Derived Syngas

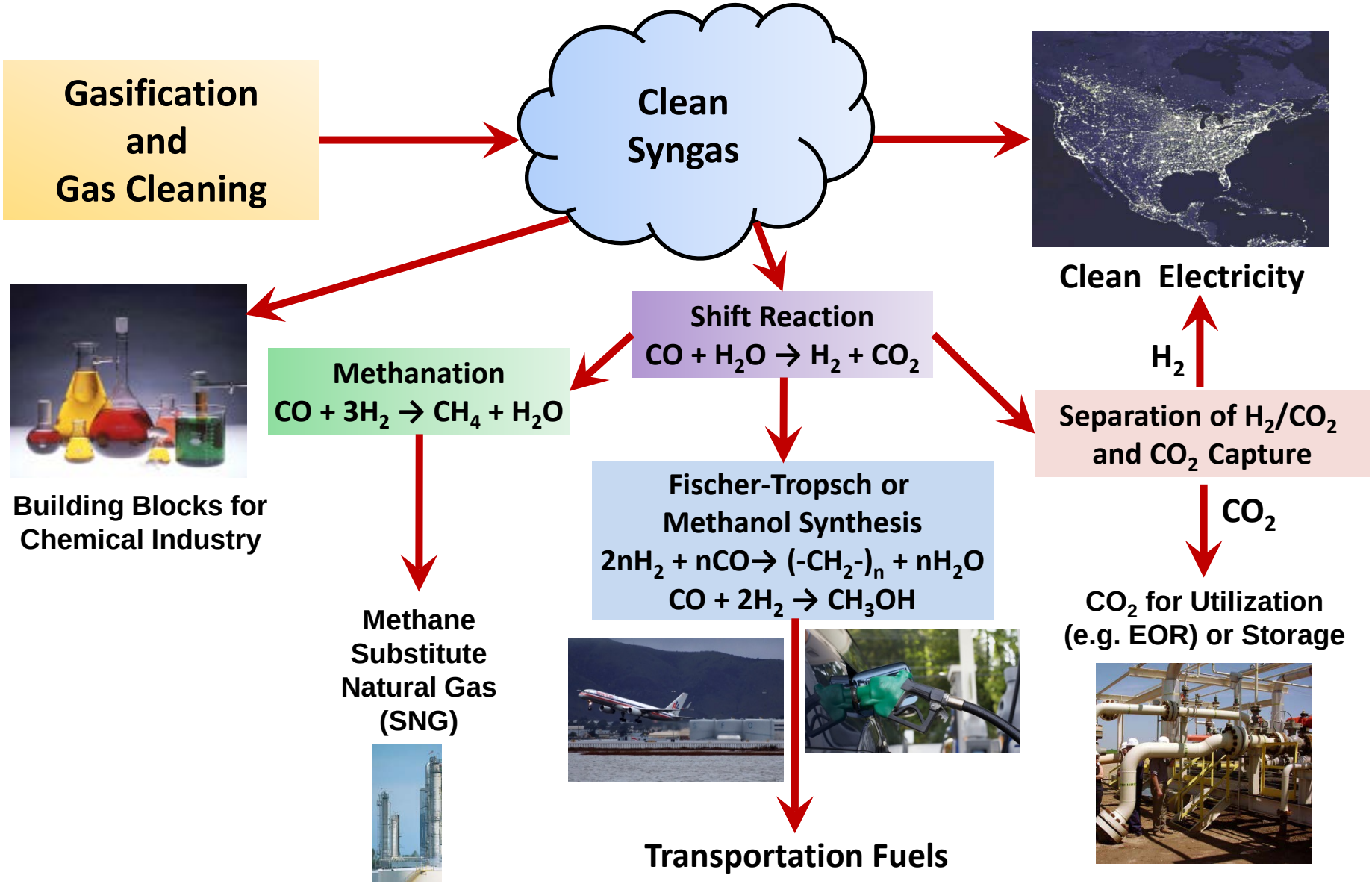

Coal to Liquids Technologies

Conversion Technologies

- Direct (Bergius Hydrocracking)
- Indirect (Gasification + [Fischer-Tropsch or Methanol])
- Hybrid (combination of direct and indirect)

Shenhua's Direct Coal to Liquids Plant

Three Options for Coal to Liquids Plants

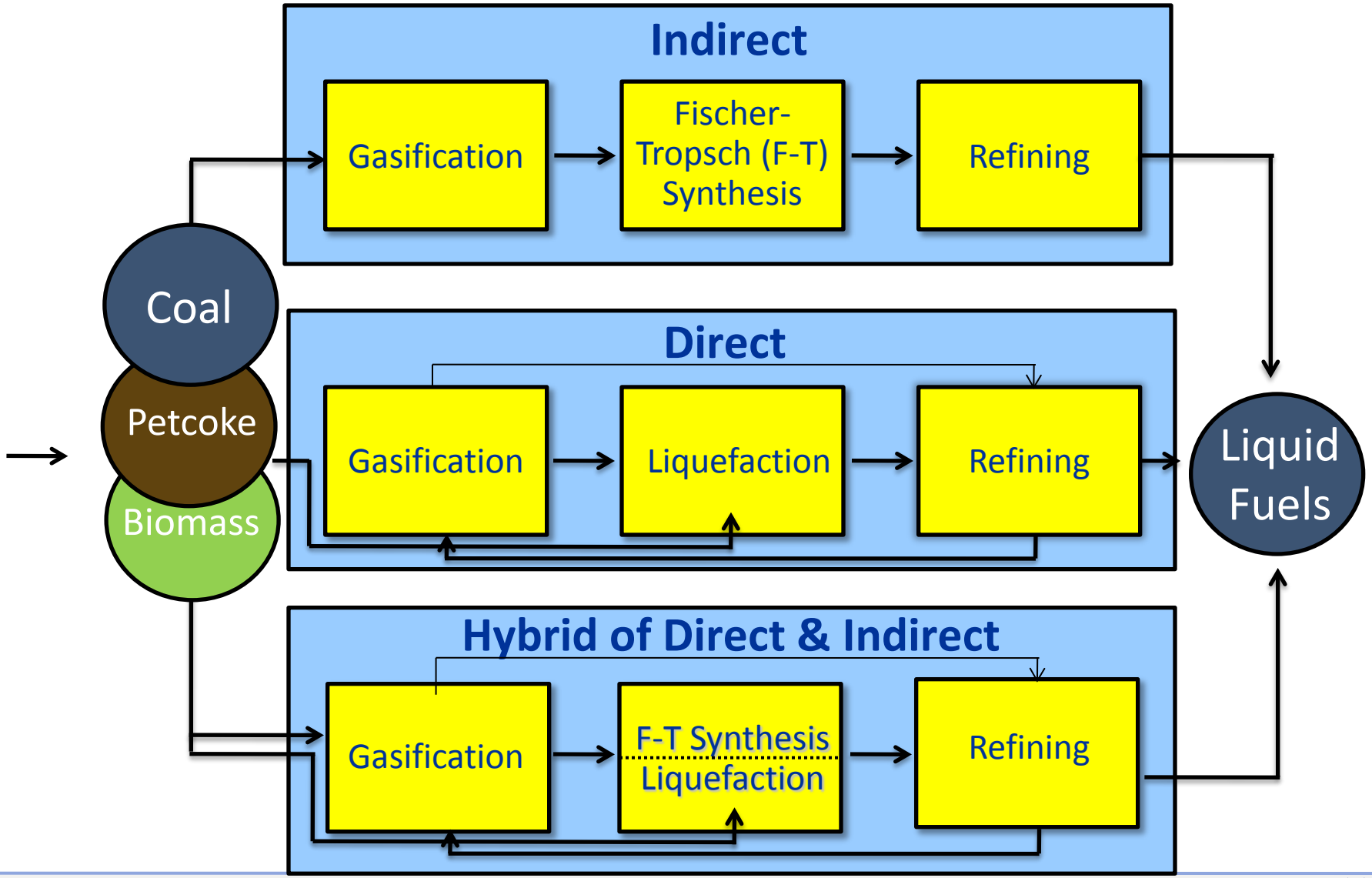

Based on ExxonMobil graphic

Example of a DCL Process Flow Diagram

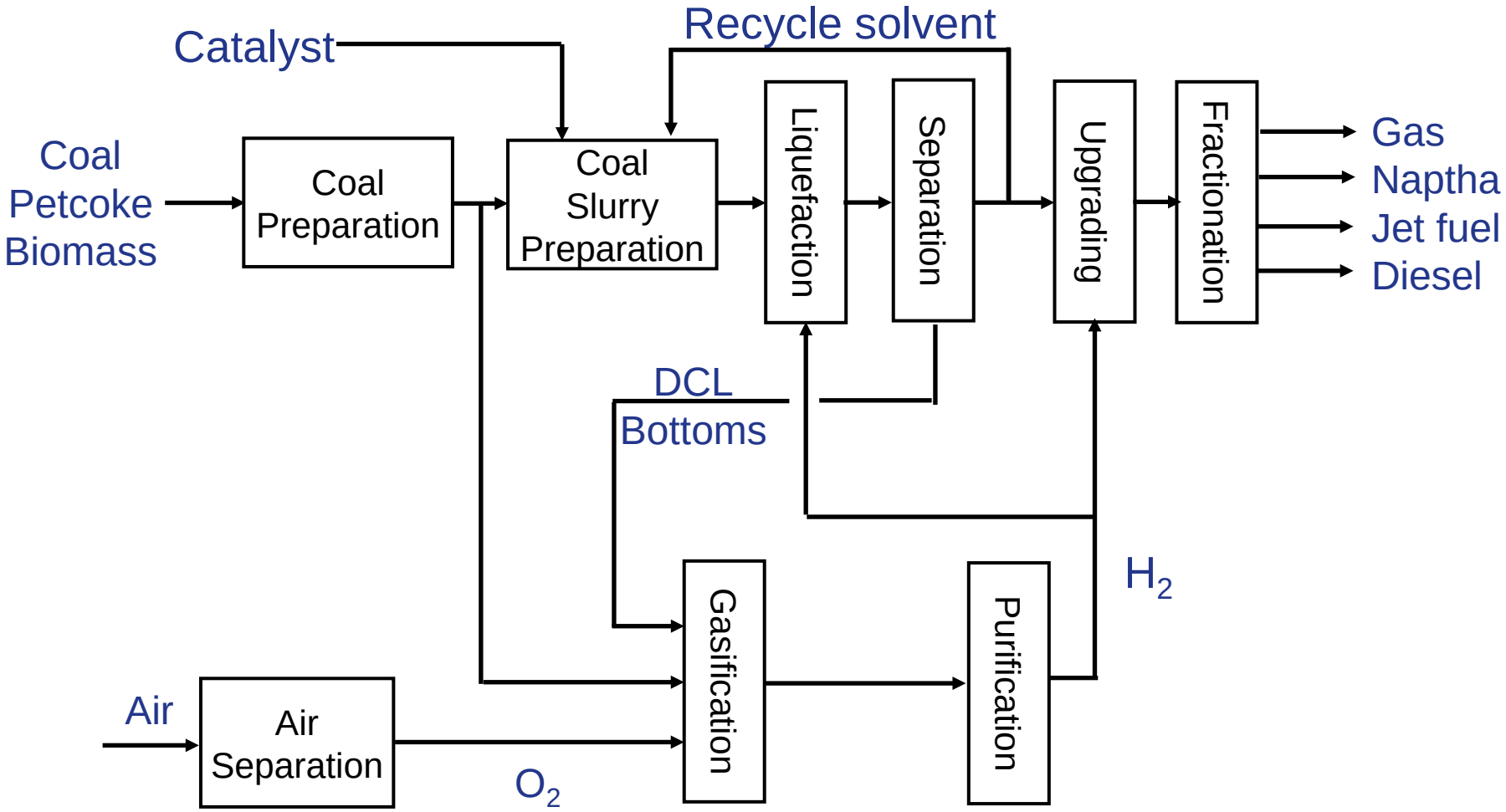

Direct Coal Conversion Projects

Originally developed in Germany in 1917

Used to produce aviation fuel in WWII

U.S. spent $3.6 billion on direct coal conversion R&D from 1975-2000

U.S developed technology licensed to China in 2002

HTI's R&D Center
Lawrenceville, NJ
3 TPD (30 BPD)

Catlettsburg, KY
250 – 600 TPD
(1,800 BPD)

Inner Mongolia, China
3,000 TPD
(24,000 BPD)

Shenhua Direct Coal Liquefaction (DCL) Plant

Shenhua Group – near Ordos, Inner Mongolia, China

Production Capacity:

1.08 M tons/yr (~24,000 BPD) liquid products (mainly diesel & naphtha) from 3.5 M tons/yr coal

Plant Cost: $1.5 B USD

4 years of construction (2004-2008)

Commissioned 2008

Shenhua CTL Plant

World's only commercial DCL plant

Shenhua DCL utilizes technology pioneered by DOE integrated with German and Japanese technologies, and combined with Shenhua innovations

Direct Conversion

Advantages

- Produces high-octane gasoline
- More energy efficient than indirect conversion (i.e. more fuel/Btus produced per ton of coal)
- Products have higher energy density (Btu/gallon) than indirect conversion
- One step conversion process

Disadvantages

- High aromatic content
- Low-cetane number diesel
- Sulfur and other pollutants removal difficulties
- High operating costs due to harsh process conditions
- Limited experience (first/ only commercial operation started 2008)
- Highly coal specific

Indirect Coal Conversion to Liquid Fuels

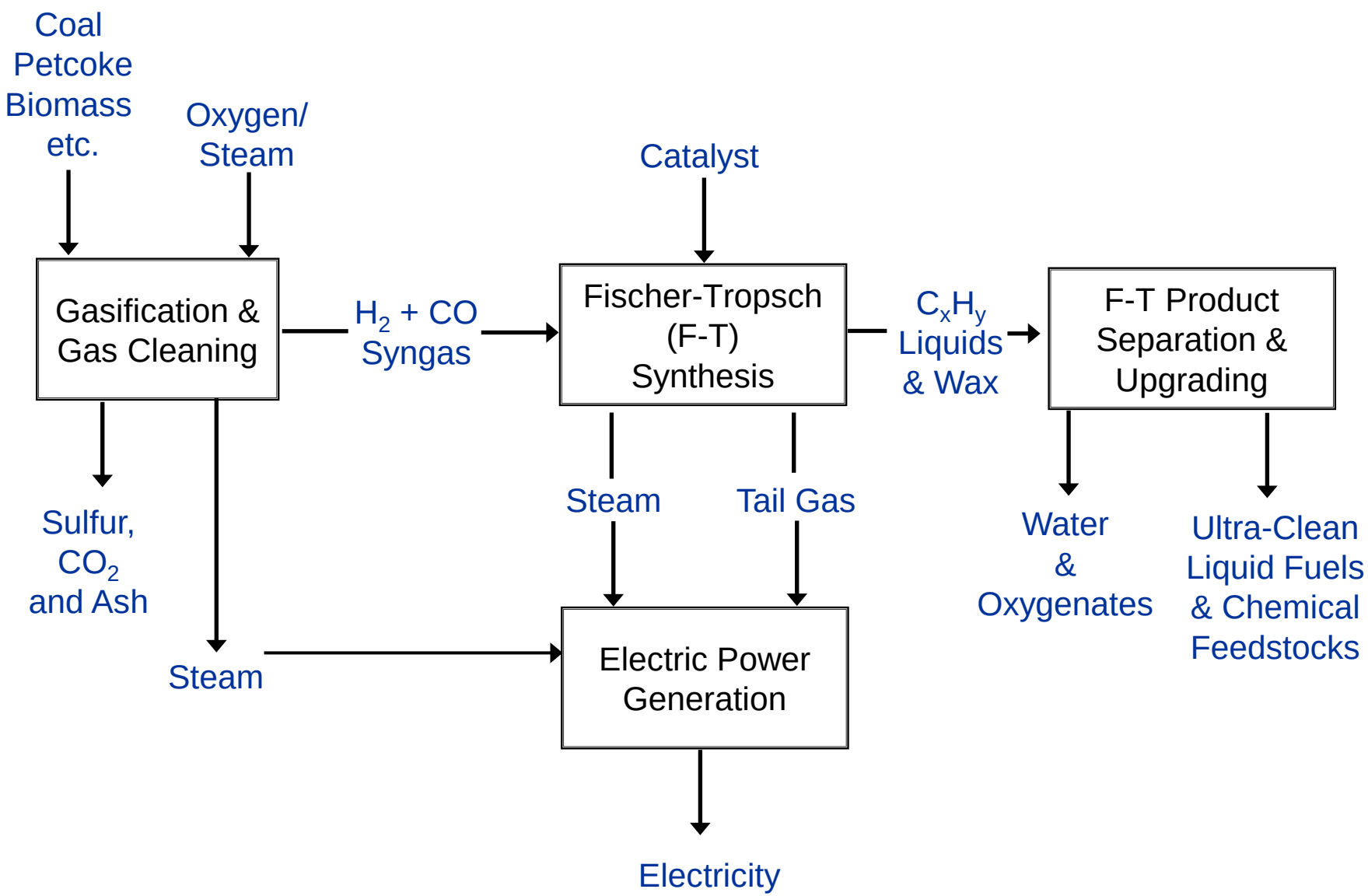

Fischer-Tropsch & Incidental Reactions

Paraffins	$2(n+1)H_2 + nCO \longrightarrow C_nH_{(2n+2)} + nH_2O$
Olefins	$2nH_2 + nCO \longrightarrow C_nH_{2n} + nH_2O$
Alcohols	$2nH_2 + nCO \longrightarrow C_nH_{2n+1}OH + (n-1)H_2O$
WGS	$CO + H_2O \longleftrightarrow CO_2 + H_2$
Boudouart	$2CO \longleftrightarrow C_{\downarrow} + CO_2$
Coking	$CO + H_2 \longrightarrow C_{\downarrow} + H_2O$

Examples of Fuels Synthesis Reactions

Primary Fuels (Methanol, Octane) Production

Methanol $CO + 2H_2 \longrightarrow CH_3OH$

(H_2/CO ratio = 2)

Octane $8CO + 17H_2 \longrightarrow H\text{-}(CH_2)_8\text{-}H + 8H_20$

(H_2/CO ratio = 2.125)

Syngas ratio H_2/CO usually in range of 2 or slight excess

Indirect Coal Conversion

Liquid products from indirect conversion process

- Zero sulfur
- Near zero aromatic hydrocarbons
- Minimal refining for ultra-clean diesel or jet fuel production

Captured CO_2 may be utilized (e.g. EOR) or sent to storage

Indirect conversion plants can co-produce electric power to improve process economics and can also be reconfigured to produce hydrogen

SASOL in South Africa has two large, indirect coal conversion facilities (SASOL II & III) that currently produce about 160,000 BPD of liquid fuels

Sasol Ltd.

Indirect Coal Conversion - SASOL I

Sasolburg, South Africa

Plant startup 1955

- 17 Sasol-Lurgi fixed bed dry bottom gasifiers
- 100% Sub-bituminous coal feedstock
- Fisher-Tropsch process for liquid chemicals production

Supplies syngas to:

- Sasol Wax to produce Fischer-Tropsch hard waxes
- Sasol Solvents to produce methanol and butanol
- Sasol Nitro to produce ammonia

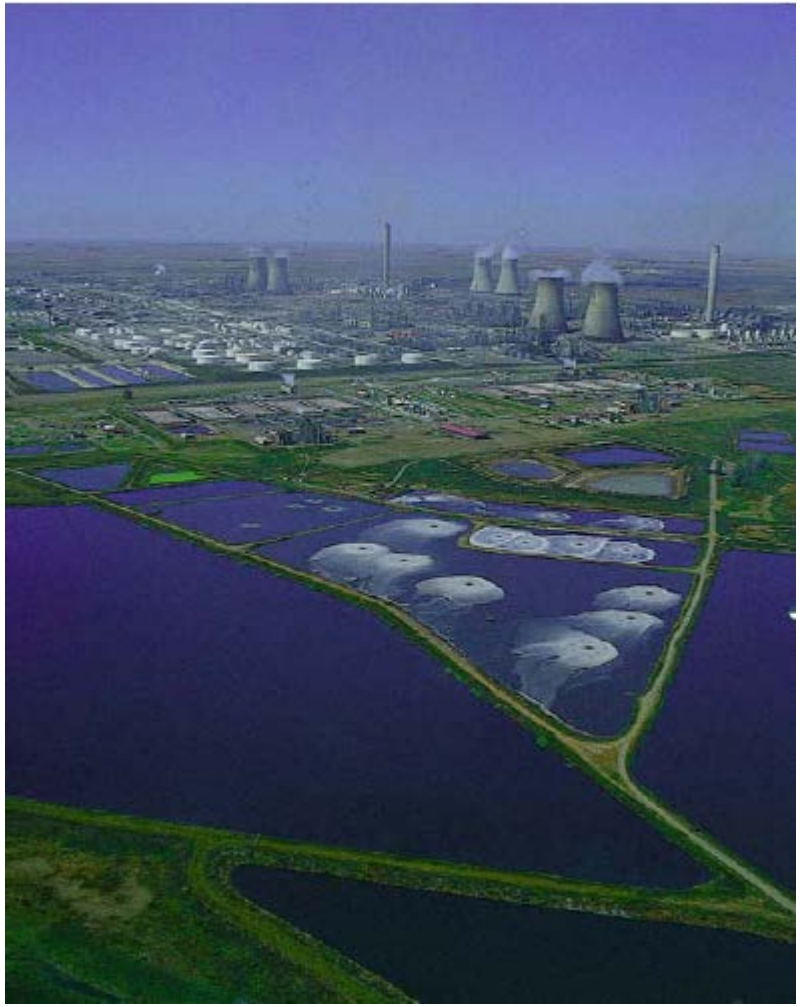

Plant converted from coal gasification to natural gas reforming - 2004

Photo: John Sichinga

Indirect Coal Conversion - SASOL II & III

Secunda, South Africa

Plant startup 1974

- 80 Sasol-Lurgi fixed bed dry bottom gasifiers
- 4 additional gasifiers currently being commissioned for Sasol Synfuels
- ~160,000 BPD production from ~40M tons/yr of coal, constituting ~27% of South Africa's total liquid fuels production in 2012
- Sub-bituminous coal feedstock, supplemented with natural gas
- Fisher-Tropsch process for Liquid Fuels & Chemicals production using Sasol's Advanced Synthol Reactor technology

Photo: Courtesy Sasol

Indirect Coal Conversion

Advantages

- Ultra-clean products
- Well suited for CO_2 capture
- Well suited for electric power co-production/ polygeneration
- Lower operating expenses than direct conversion due to less severe process conditions
- Almost 60 years of operating experience (SASOL I – 1955)

Disadvantages

- Less energy efficient than direct conversion (i.e., less fuel/Btu's produced per ton of coal)
- Products have lower energy density (Btu/gallon) than direct conversion
- Two step conversion process, coal to gas to liquids

Hybrid DCL/ICL Plant Concept

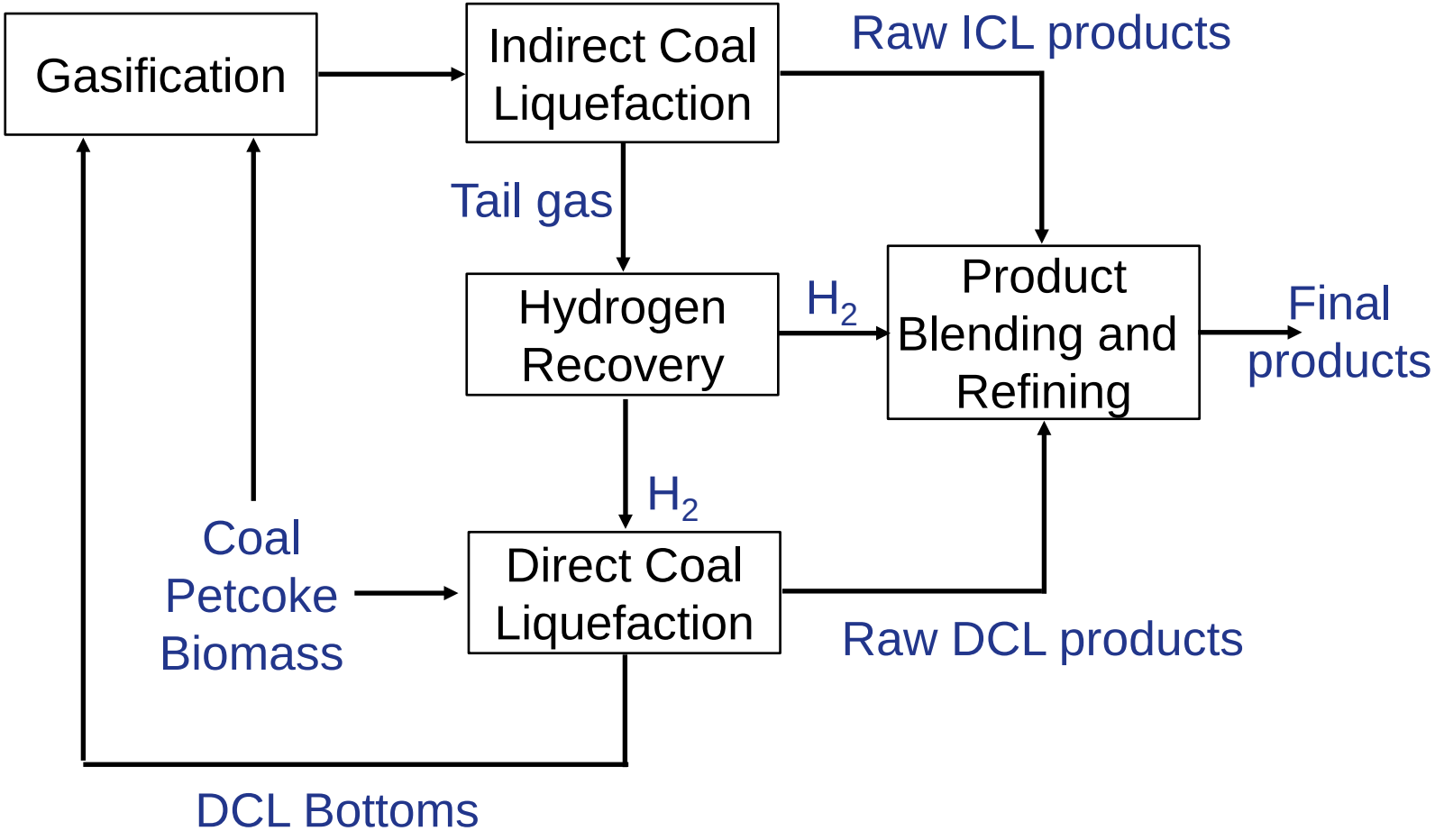

Coal & NG Hybrid Plant Concept

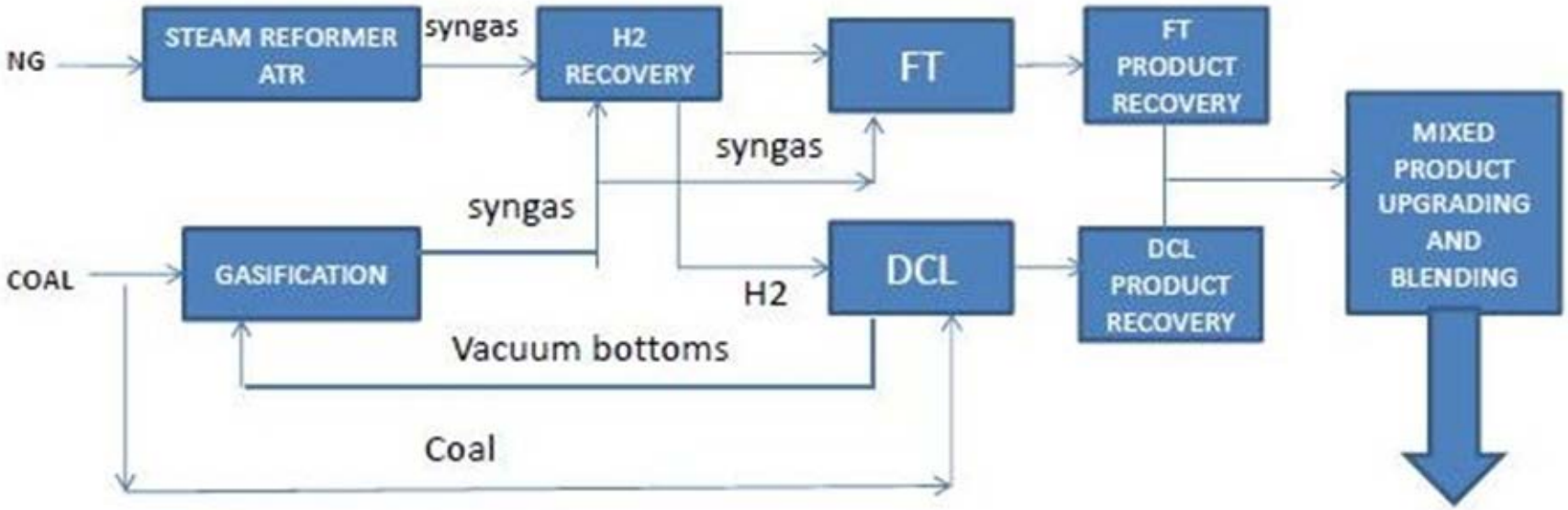

- Co-utilization of abundant U.S. fossil fuel reserves (coal and natural gas)
- Synergy of NG reforming with direct coal to liquids (DCL)
  - Address H_2 demand of DCL from NG reforming
  - Product flexibility & blending opportunity

Combining Direct with Indirect Conversion

Possible Benefits of a Hybrid Conversion Process

Indirect coal conversion technology – High quality fuels produced, but lower process efficiency

Direct coal conversion technology – High theoretical process efficiency but expensive upgrading required to meet fuel specifications

Hybrid Approaches

- Combination of aspects of both direct and indirect coal conversion technologies may strike a balance between process efficiency and final fuel quality by blending the indirect conversion (FT) fuels to reduce the amount of upgrading required for the DCL output, increasing "drop-in" fuels output
- Using multiple or blended carbon feedstocks (biomass and natural gas with coal) may improve environmental performance
- Combining aspects of syngas conversion or liquids processing (upgrading) technologies may generally improve process flexibility and maximize targeted product slate

Comparison of Various CTL Configurations

	DCL	ICL Recycle	ICL Once Through	Hybrid DCL/ICL
Coal consumption (tonnes per day, dry basis)	23,027	29,307	34,450	23,146
Product mix (BPD) Diesel Naptha LPG Total	 45,812 18,863 5,325 70,000	 47,687 22,313 0 70,000	 47,687 22,313 0 70,000	 46,750 20,591 2,660 70,000
Net Export Power (MW)	0	399	1,139	45
Thermal efficiency (%)	60.1	48.4	47.4	58.7
Product yield (bbl/t dry coal)	3.04	2.39	2.03	3.02
Plant CO_2 generation (kg CO_2/bbl product)*	434	706	894	458

*Approximately 80% of the CO_2 is in concentrated form ready for sequestration

Source: Headwaters

Operating & Planned CTL & CBTL Plants

Coal Conversion Pathways and Technologies

with Examples of Operational Plants

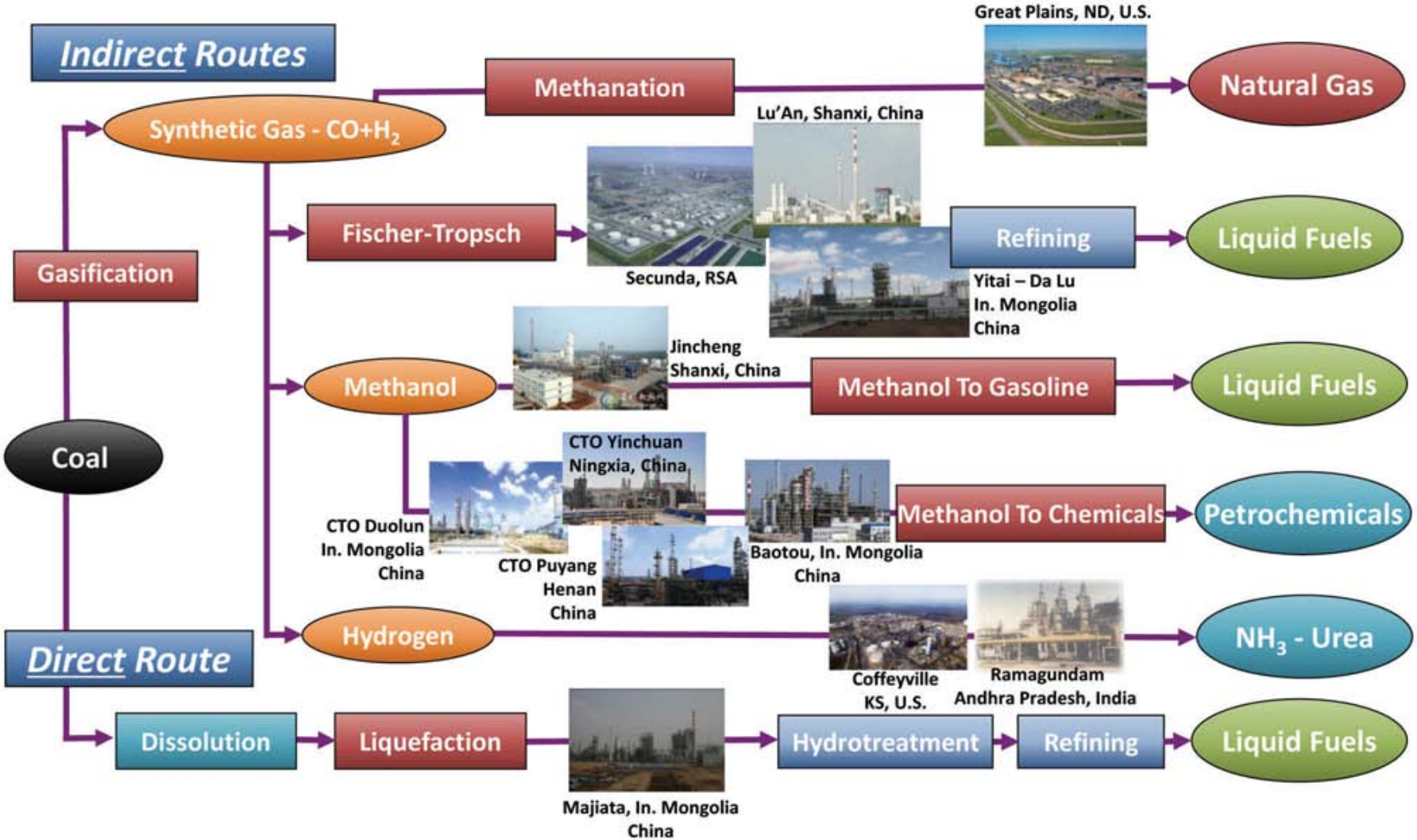

Source: Serge Perineau, President, World CTX

U.S. Coal to Liquid Fuels Projects

Project	Developer	Locations	Type	Products	Status
Future Fuels Kentucky CTL	Future Fuels, Kentucky River Properties	Perry County, Kentucky	CTL	Not specified. Coal to methanol and other chemicals (over 100 million tons of coal supply)	Planning
US Fuel CTL	US Fuel Corp.	Perry County/Muhlenberg County, Kentucky	CTL	300 tons of coal into 525 BPD liquid fuels including diesel and jet fuel	Planning
Many Stars CTL	Australian-American Energy Co. (Terra Nova Minerals or Great Western Energy), Crow Nation	Big Horn County, Montana	CTL	First phase: 8,000 BPD liquids	Planning (no new information since 2011)
Secure Energy CTL (aka MidAmericaC2L	MidAmericaC2L /Siemens	McCracken County, Kentucky	CTL	10,200 BPD gasoline	Planning (no new information since 2011)
Adams Fork Energy - TransGas WV CTL	TransGas Development Systems (TGDS)	Mingo County, West Virginia	CTL	7,500 TPD of coal to 18,000 BPD gasoline and 300 BPD LPG	Operations 2016 or later
FEDC Healy CTL	Fairbanks Economic Development Corp. (FEDC)	Fairbanks, Alaska	CTL	4.2-11.4 million TPY Healy-mined coal; ~40k BPD liquid fuels; 110MW	Planning
Tyonek Coal-to-Liquids (formerly Alaska Accelergy CTL Project)	Accelergy, Tyonek Native Corporation (TNC)	Cook Inlet, Alaska	CBTL	Undefined amount of coal/biomass to 60,000 BPD jet fuel/gasoline/ diesel and 200-400 MW electricity	Planning

World (Non-U.S.) Coal to Liquid Fuels Projects

Project	Developer	Locations	Type	Products	Status
Sasol Synfuels II (West) & Sasol Synfuels III (East)	Sasol (Pty) Ltd.	Secunda, South Africa	CTL	160,000 BPD; primary products gasoline and light olefins (alkenes)	1977(II)/ 1983(III)
Shenhua Direct Coal Liquefaction Plant	Shenhua Group	Erdos, Inner Mongolia, China	CTL (direct liquefaction	20,000 BPD; primary products diesel fuel, liquefied petroleum gas, naphtha	2008
Yitai CTL Plant	Yitai Coal Oil Manufacturing Co., Ltd.	Ordos, Zhungeer, China	CTL	160,000 mt/a Fischer-Tropsch liquids	2009
Jincheng MTG Plant	Jincheng Anthracite Mining Co., Ltd.	Jincheng, China	CTL	300,000 t/a methanol from MTG process	2009
Sasol Synfuels	Sasol (Pty) Ltd.	Secunda, South Africa	CTL	3,960,000 (Nm^3/d) syngas capacity; Fischer-Tropsch liquids	2011
Shanxi Lu'an CTL Plant	Shanxi Lu'an Co. Ltd.	Lu'an, China	CTL	160,000 mt/a Fischer-Tropsch liquids	2014
ICM Coal to Liquids Plant	Developer	Tugrug Nuur, Mongolia	CTL	13,200,000 (Nm^3/d) syngas capacity; gasoline	Planning (2015)
Yitai Yili CTL Plant	Yitai Yili Energy Co.	Yili, China	CTL	30,000 BPD Fischer-Tropsch liquids	Planning (2015)

World (Non-U.S.) Coal to Liquid Fuels Projects

Project	Developer	Locations	Type	Products	Status
Yitai Ordos CTL Plant Phase II	Yitai	Ordos, Zhungeer-Dalu, China	CTL	46,000 BPD Fischer-Tropsch liquids	Planning (2016)
Yitai Ürümqi CTL Plant	Yitai	Guanquanbao, Urunqi, China	CTL	46,000 BPD Fischer-Tropsch liquids	Planning (2016)
Shenhua Ningxia CTL Project	Shenhua Group Corporation Ltd.	China, Yinchuan, Ningxia	CTL	4 million tonnes/year of diesel & naphtha	Planning (2016)
Celanese Coal/Ethanol Project	Celanese Corporation – PT Pertamina Joint Venture	Indonesia, Kalimantan or Sumatra	CTL	1.1 million tons of coal/year to produce ethanol	Planning (2016)
Clean Carbon Industries	Clean Carbon Industries	Mozambique, Tete province	Coal waste-to-liquids	65,000 BPD fuel	Planning (2020)
Arckaringa Project	Altona Energy	Australia, South	CTL	30,000 BPD Phase I 45,000 BPD + 840 MW Phase II	Planning (TBD)

Coal and Coal-Biomass to Liquids (C&CBTL) Program

DOE Vision for Coal and Coal-Biomass to Liquids

- **Enable cost-competitive U.S. production of ultra-clean liquid transportation fuels (gasoline, diesel/jet fuel)**
  - At or below lifecycle Greenhouse Gas (GHG) emissions from conventional petroleum
- **Either drop-in fuels or refinery feedstock**
- **Combine fossil technologies with renewable or other low carbon footprint technologies to reduce overall GHG emissions impact**
- **Novel H_2 production technologies**

TECHNOLOGIES EXIST TO DO THIS NOW – except for cost

NEED TO DEVELOP LOWER COST AND MORE EFFICIENT TECHNOLOGIES

Coal and Coal-Biomass to Liquids Program

Gasification-Based Technologies: Coal-Biomass Feed and Gasification, and Advanced Fuels Synthesis (syngas conversion into transportation fuel)

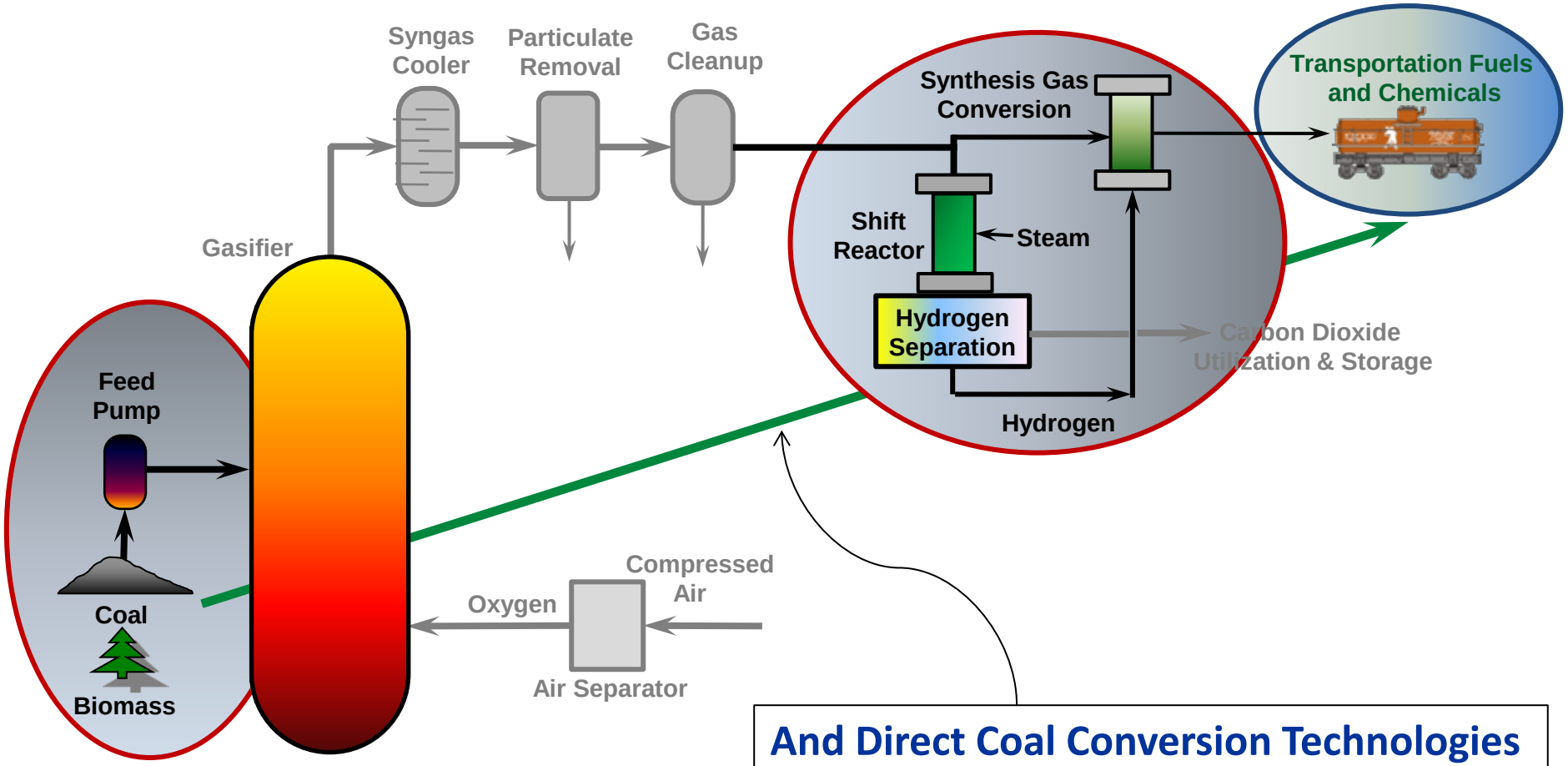

And Direct Coal Conversion Technologies (which don't use gasification at all)

KEY: Gray shaded areas are not applicable to C&CBTL Program

Coal and Coal Biomass to Liquids Program

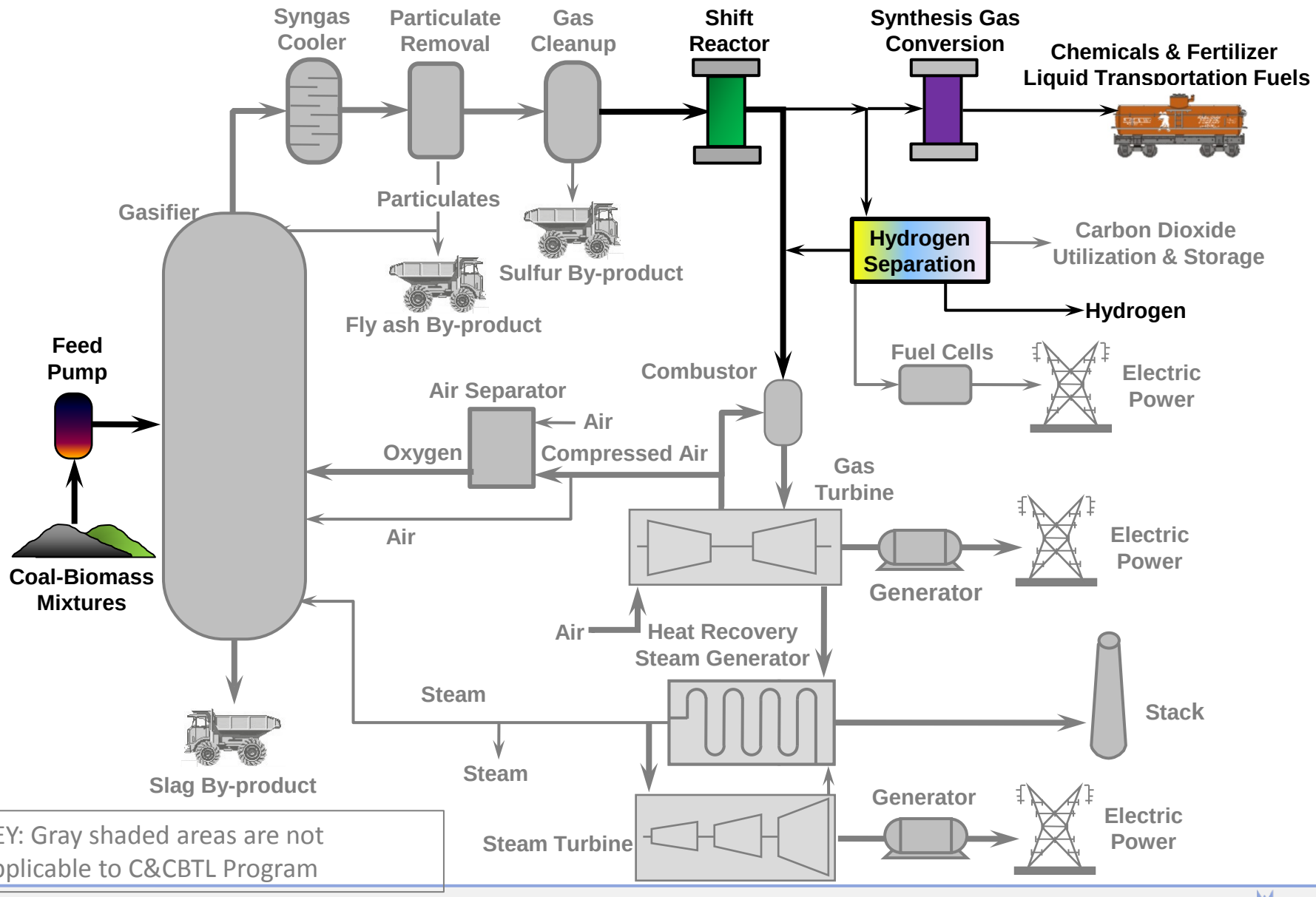

KEY: Gray shaded areas are not applicable to C&CBTL Program

Coal and Coal-Biomass to Liquids Program

Key Technologies

Coal-Biomass Feed and Gasification – The use of biomass mixed with coal to reduce the GHG impact of traditional CTL approaches. Technologies of interest include:

- Coal-biomass feed systems
- Optimization of coal-biomass gasification, and use of resultant syngas

Advanced Fuels Synthesis – Catalyst and reactor optimization for producing liquid hydrocarbon fuels from syngas resulting from gasification of coal-biomass mixtures. Technologies of interest include:

- Advanced syngas processing through intensification/co-production/co-feeding in a Fischer-Tropsch plant to produce (primarily) diesel fuel
- Improvements to direct coal liquefaction (DCL) processes
- Hybrid systems using a combination of DCL and syngas-based liquid fuel production (may also include co-production/co-feeding systems)
- GHG emission reduction technologies other than CCS or biomass co-feed

Economic Challenges & Opportunities

Coal and Coal-Biomass to Liquids

- **Challenges**
  - Oil prices uncertain: higher or lower
    - Higher prices, if believed to be transient, can't justify the high-capital investment in a 20-30 year plant
  - Low natural gas prices: GTL competition
  - Current technology suite (without carbon capture or biomass co-feeding) emits more CO_2 than conventional oil refining
- **Opportunities**
  - Economic stability through diversified transportation fuel sources
  - Technology exports to countries with low domestic oil supplies, leading to more stable global oil prices

Coal and Coal-Biomass to Liquids - Technical Challenges

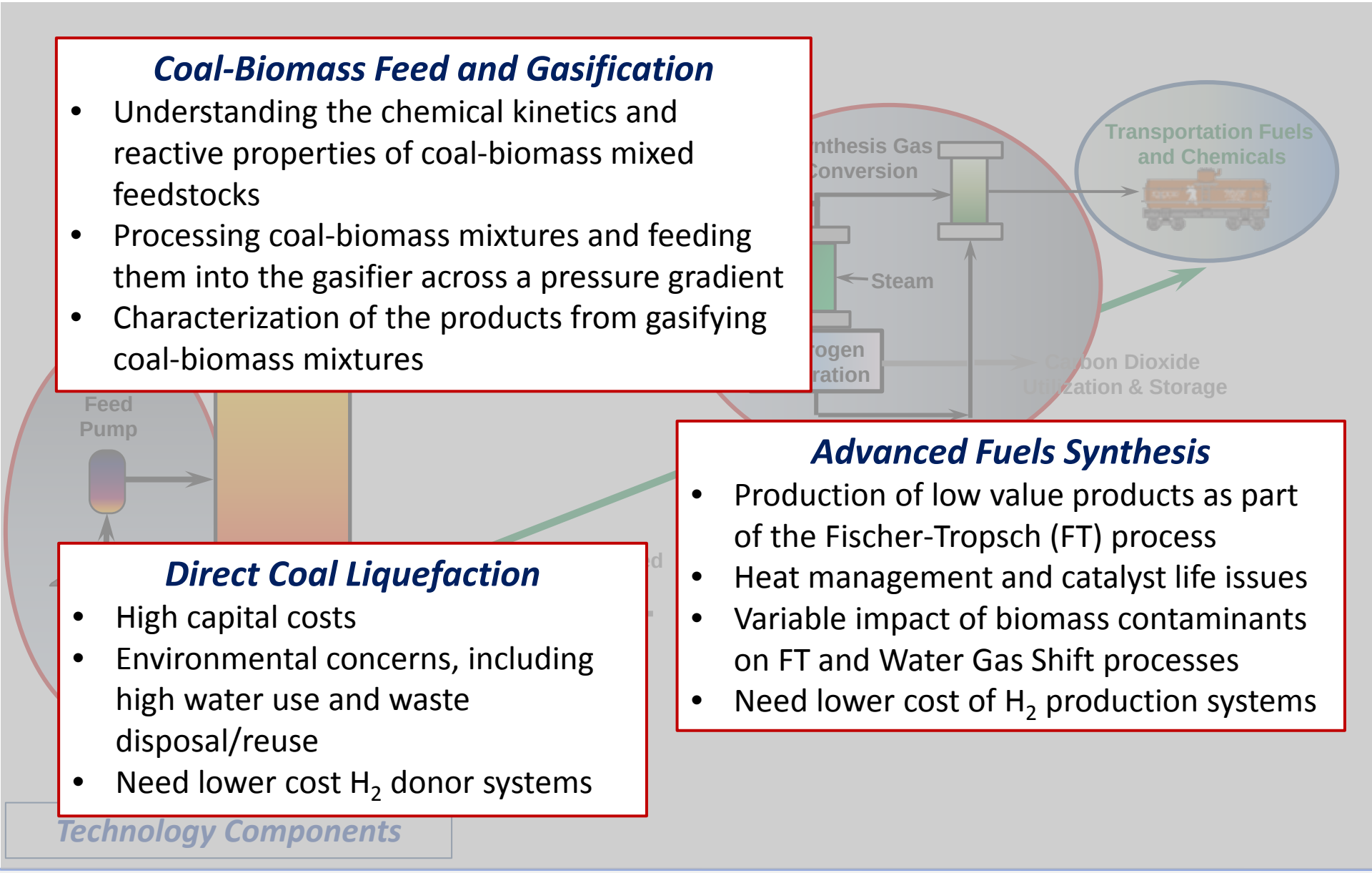

Coal-Biomass Feed and Gasification

- Understanding the chemical kinetics and reactive properties of coal-biomass mixed feedstocks
- Processing coal-biomass mixtures and feeding them into the gasifier across a pressure gradient
- Characterization of the products from gasifying coal-biomass mixtures

Direct Coal Liquefaction

- High capital costs
- Environmental concerns, including high water use and waste disposal/reuse
- Need lower cost H_2 donor systems

Advanced Fuels Synthesis

- Production of low value products as part of the Fischer-Tropsch (FT) process
- Heat management and catalyst life issues
- Variable impact of biomass contaminants on FT and Water Gas Shift processes
- Need lower cost of H_2 production systems

Program Budget

Coal and Coal-Biomass to Liquids

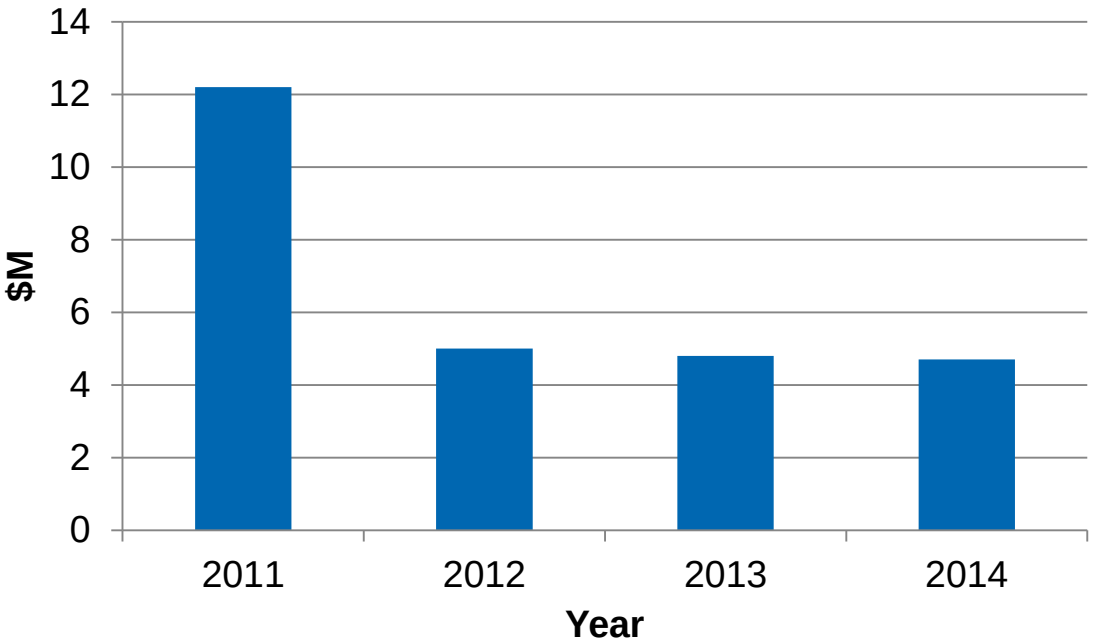

Program Historical Annual Budget*

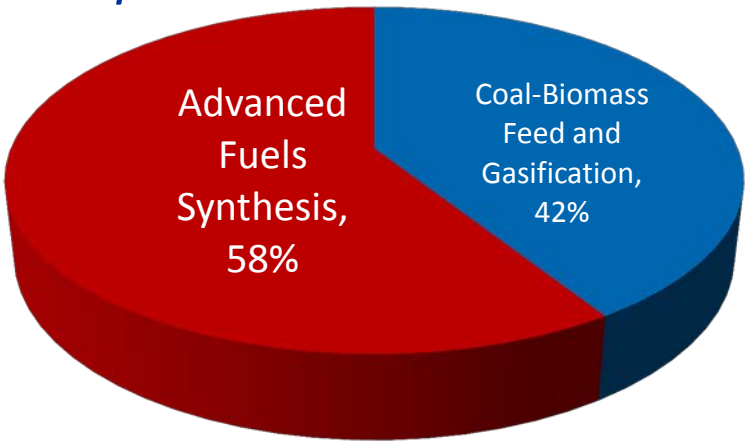

Active Projects
(with program obligations since FY11; excludes ARRA Funds)

Plan to leverage future budgets through tighter integration with the Gasification Systems R&D efforts – both programs should benefit from Polygeneration concepts and configurations

**was the Hydrogen Program prior to 2012*

Coal and Coal-Biomass to Liquids Program Project Summaries

Investigation of Coal-Biomass Catalytic Gasification Using Experiments, Reaction Kinetics and Computational Fluid Dynamics

Virginia Polytechnic Institute and State University

Program Strategy

- Characterize chemical kinetics and reaction mechanisms of co-gasification fuels

Benefits

- Improving co-gasification of coal and biomass feedstock mixes enables use of abundant coal and biomass resources to produce affordable power, fuels and chemicals in a safe & environmentally clean manner

Objective

- Determine key reactive properties of sub-bituminous coal and biomass feedstock mixes
- Develop a computational fluid dynamics (CFD) tool for the design of co-gasification gasifiers

Scope of Work

- Utilize catalysts to improve gasification with aim to lower operating temperatures
- Conduct experiments over a range of temperatures at atmospheric pressure utilizing bench-scale (2”) and pilot-scale (4”) diameter fluidized bed reactors
- Implement reaction kinetic modeling into NETL’s multiphase flow code (MFIX)

Accomplishments

- Pyrolyzed/gasified biomass under different atmospheres and studied coal/poplar mixtures under different pressures and temperatures in two-inch fluidized bed reactor
- Experiments screening red mud for catalytic properties on coal and corn stover co-gasification; beneficial catalytic effects observed
- Reaction kinetics and mechanisms determined; development of MFIX code underway with tuning of parameters for lumped kinetic model, and simulation of the experimental setup of co-gasification processes

Project Team

- Virginia Polytechnic Institute and State University, University of Delaware, Northeastern University

Project Duration - 10/10 – 9/15

Feasibilities of a Coal-Biomass to Liquids Plant in Southern West Virginia

West Virginia University Research Corporation

Program Strategy

- Introduce biomass—the only carbon-based renewable energy resource—into a coal to liquids process as coal-biomass to liquids (CBTL) to further reduce greenhouse gas (GHG) emissions

Benefits

- Reduction in GHG emissions caused by petroleum refining and reduced dependence on imported oil
- A CBTL facility would promote regional rural development and associated economic benefits in southern West Virginia

Objective

- Determine the economic, technical, market, and financial feasibilities of a CBTL facility in the region

Scope of Work

- Rigorous evaluation of the feasibility of CBTL plant:
  - Determine the best CBTL technology by analyzing three production scenarios
  - Identify best strategies for feedstock management, facility operations, and siting

Accomplishments

- Suitable sites for locating a CBTL facility in southern West Virginia were determined and mapped
- Environmental impacts were quantified; modeled post-FT CO_2 capture unit
- Market feasibility/marketing plan development and sensitivity studies continue; capital cost and operating/maintenance costs estimating model validated

Project Team

- West Virginia University Research Corporation

Project Duration

- 10/12 – 09/15

Laboratory Scale Liquids Production and Assessment: Coal and Biomass to Drop-In Fuels

Altex Technologies Corporation

Program Strategy

- Develop an innovative process that can be used to produce a blend-ready, low cost fuel stream from a coal and biomass feed mixture

Benefits

- Use of a replacement fuel (biomass) along with coal has the potential to substantially reduce petroleum use by billions of gallons per year, with a corresponding reduction in emissions of CO_2

Objective

- Fabricate and test a laboratory-scale unit to produce liquid fuel from coal containing a portion of biomass (such as corn stover and switchgrass) at a rate of two liters per day

Scope of Work

- Produce catalysts needed for testing the end-to-end lab-scale fuel-production system
- Produce liquid fuel from lignite, sub bituminous, bituminous coal samples along with biomass materials, such as corn stover, switchgrass, and forest residue
- Characterize produced fuel quality using parameters such as total acid number, distillation temperature, flash point, net heat of combustion, thermal stability and polycyclics
- Estimate the economics of building and operating a 50,000 barrels per day coal and biomass fed synthetic gasoline plant coal and biomass feedstock

Accomplishments

- Catalyst preparation studies completed; Zeolite catalyst selected; regenerability of catalyst experimentally investigated/proved. Developing/building laboratory-scale unit.

Project Team

- Altex Technologies Corporation, Pennsylvania State University

Project Duration

10/12 – 09/15

Poison Resistant Water-Gas-Shift Catalysts for Biomass and Coal Gasification

TDA Research Inc.

Program Strategy

- Develop cost-effective water-gas-shift (WGS) catalysts enabling a coal biomass liquids fuel option

Benefits

- A coal biomass alternate liquids fuel option increases U.S. energy security

Objective

- Optimize catalyst formulation, scale up catalyst synthesis, and, perform extensive lifetime activity testing using contaminants in syngas derived from co-gasification of coal and biomass

Scope of Work

- Synthesize additional catalysts using formulations that have a wide range of compositions centered on successful Phase I sour shift catalysts
- Correlate performance during sour shift with physical and chemical characteristics of the catalyst
- Explore the effects of gold, molybdenum, and cobalt loading
- Test effects of major catalyst poisons; potassium chloride and ammonia, as well as effect of potential catalyst poisons from trace metals, such as arsenic, phosphorus, cadmium and mercury

Accomplishments

- Designed and built a bench-scale catalyst test apparatus and successfully developed a WGS catalyst that met specifications and is now in the process of being optimized

Project Team

- TDA Research Inc.

Project Duration

- 06/10 – 08/16

Small Scale Coal-Biomass to Liquids Production Using Highly Selective Fischer-Tropsch Synthesis

Southern Research Institute

Program Strategy

- Develop economical and environmentally-sustainable process to convert coal-biomass feedstocks to gasoline- and diesel-range hydrocarbon liquids using Fischer-Tropsch (F-T) synthesis

Benefits

- Commercialization of a cost-effective process to produce renewable gasoline increases the Nation's fuel supply diversity and energy security through the use of abundant coal resources and simultaneously protects the environment

Objective

- Demonstrate potential for CBTL cost reduction by maximizing the production of C5-C20 hydrocarbon liquids using a selective F-T catalyst and evaluate impact of the addition of biomass to coal on product characteristics, carbon foot print, and economics

Scope of Work

- Implement full CBTL bench-scale F-T synthesis reactor system to produce liquid transportation fuels using coal and coal-biomass derived syngas from an existing air-blown transport gasifier
- Conduct technical and economic analysis of the CBTL processes, and potential reduction of carbon footprint relative to petroleum diesel baselines

Accomplishments

- Bench-scale skid-mounted F-T reactor system has been validated and operated successfully; engineering modifications in system have been made to improve future operations
- Produced >2 L per day of hydrocarbon liquids

Project Team

- Southern Research Institute, National Carbon Capture Center

Project Duration

- 9/12 – 4/15

R&D to Prepare and Characterize Robust Coal/Biomass Mixtures for Direct Co-Feeding into Gasification

Gas Technology Institute

Program Strategy

- Develop a cost-effective gasification-based CBTL process to produce renewable liquid fuels that will provide diversity of fuel supply and energy security while resulting in lower future capital and operating costs

Benefits

- Broaden the applicability of commercially available gasifiers to include utilization of mixtures of carbon-neutral biomass and coal in order to extend energy resources, increase energy security, and reduce fossil-based energy production carbon emissions

Objective

- Demonstrate & assess the economic viability of fast hydrothermal carbonization (HTC) for transforming lignocellulosic biomass into a densified, friable fuel that will gasify like coal, easily blend with ground coal & coal fines, and form into robust, weather-resistant pellets and briquettes.

Scope of Work

- Deconstruct the lignocellulosic feedstock using HTC to produce samples for property testing; First on a Bench scale, then in a Process Development Unit.
- From the characteristic data, simulations will be conducted to perform techno-economic analysis to evaluate the viability of HTC for producing a new coal/HTC biomass fuel.

Accomplishments

- Process Development Unit modifications completed and PDU operated to generate HTC
- Coal/biomass briquettes prepared and analyzed

Project Team

- Institute of Gas Technology, Desert Research Institute, and the University of Nevada

Project Duration

- 10/10 – 12/14

Coal Fuels Alliance: Design and Construction of Early Lead Mini Fischer-Tropsch Refinery

University of Kentucky Center for Applied Energy Research

Program Strategy

- Congressionally directed project to advance the design and construction of a mini Fischer-Tropsch (F-T) refinery, intended for use as a low-cost test bed for new concepts (Involves the "upstream" section of C&CBTL plant)

Benefits

- Develop meaningful research and engineering about the technology and processes, scalability, cost and economics, as well as product slate characteristics and quality
- Open-access facilities puts information in public domain, aids wider scientific/industrial community
- Means to independently review vendor claims and validate fuel performance and quality.

Objective

- Construct coal-fueled gasifier with a gas separation and clean-up system compatible with existing F-T reactor at the University of Kentucky Center for Applied Energy Research (CAER) site

Scope of Work

- Design and construct a mini Fischer-Tropsch (F-T) refinery pilot facility to convert coal & woody biomass to 1 BPD of F-T liquids via gasification Focus on environmental considerations, particularly management and reduction of carbon dioxide emissions from CBTL facilities and fuel use

Accomplishments

- Major systems of the upstream unit (coal preparation, gasifier, controls) were finished and tested (cold start)
- Oxygen tank, flare and chiller systems readied; acid gas plant in fabrication

Project Team

- University of Kentucky

Project Duration

08/08 – 06/15

Advanced Gasifier and Water Gas Shift Technologies for Low Cost Coal Conversion to High Hydrogen Syngas

Aerojet Rocketdyne

Program Strategy
- Combine gasification and water gas shift technologies to generate low cost, high-hydrogen syngas from coal

Benefits
- Syngas synthesis with increased efficiency and availability, and with decreased capital cost (15-18%)
- Feedstock flexibility, and quick start-up and shut-down
- Commercially competitive production of power from IGCC with 90 percent carbon capture and/or fuels from CTL at petroleum-equivalent greenhouse gas emissions
- Broad utilization of U.S. coal resources, improvement of U.S. economic competitiveness, environmental benefits world-wide

Objective
- Develop an advanced pilot-scale gasifier for use in a first-of-a-kind, commercially relevant demonstration plant

Scope of Work
- Design and operate a AR compact gasifier at a pilot scale with RTI advanced water gas shift system
- GTI to test a range of coals, as well as a coal/natural gas hybrid, in the compact gasifier
- Nexant to prepare a techno-economic analysis of benefits of the technology for both integrated gasification combined cycle (IGCC) and coal-to-liquids (CTL) plants

Accomplishments
- Underway

Project Team
- Aerojet Rocketdyne (AR), RTI International (RTI), Gas Technology Institute (GTI), Coanda, Nexant

Project Duration
- 10/01/2014 – 11/30/2016

Small Scale Pilot Plant for the Gasification of Coal and Coal/Biomass Blends and Conversion of Derived Syngas to Liquid Fuels Via Fischer-Tropsch Synthesis

University of Kentucky

Program Strategy

- Design, construction and operations of a coal/biomass-to-liquids (CBTL) facility at 1 bbl/day liquid fuels capacity which can be used a test bed for new concepts and technologies by technology developers at affordable cost units (Involves the "downstream" section of C&CBTL plant)

Benefits

- CBTL technology enables production of valuable clean fuel and chemical products from domestic coal while reducing CO_2 emissions, enhancing U.S. energy security and independence

Objective

- Compare compositions of Fischer-Tropsch (F-T) liquid fuels produced from coal-derived syngas with that from a mixture of coal and 8-15% biomass (torrefied basis)
- Assess the economics of the CBTL process and compare the cost of adding biomass to coal for the purpose of limiting net CO_2 emissions; investigate coal-torrefied biomass feed handling and preparation

Scope of Work

- Installation and shakedown of water-gas-shift, F-T synthesis, and hydrocracking
- Commencement of initial integrated refinery runs (feed to gasification to separations & upgrading)
- Continuous production runs of mini-refinery to produce quantities of liquid hydrocarbons
- Analysis of technology and processes, including; scalability, cost, economics, product quality

Accomplishments

- Detailed FT vessel design
- Development of preliminary PFDs/mass flows for BOP to support FT, WGS and hydrocracker units; cost estimates

Project Team

- University of Kentucky (UK) Center for Applied Energy Research (CAER)

Project Duration 10/12 – 9/16

DOD Funded C&CBTL Projects*

Breakthrough Hybrid CTL Process Integrating Advanced Technologies for Coal Gasification, NG Partial Oxidation, Warm Syngas Cleanup, and Syngas-to-Jet Fuel

RTI International

Indirect Liquefaction of Coal-Biomass Mixture for Production of Jet Fuel with High Productivity and Selectivity

Southern Research Institute

Green-House-Gas-Reduced Coal-and-Biomass-to-Liquid-Based Jet Fuel (GHGR-CBTL) Process

Altex Technology Corporation

Direct CTL for Jet Fuel Using Biomass-derived Solvents

Batelle

Technology for GHG Emission Reduction and Cost Competitiveness of Mil-Spec Jet Fuel Production Using CTL

Ceramatec, Inc.

**Award Expected in FY15*

Breakthrough Hybrid CTL Process Integrating Advanced Technologies for Coal Gasification, NG Partial Oxidation, Warm Syngas Cleanup and Syngas-to-Jet Fuel

Research Triangle Institute

Program Strategy

- CTL to produce commercially viable quantity of jet fuel that is cost competitive with that from petroleum, and with equal or lower carbon footprint

Benefits

- Aerojet Rocketdyne's Advanced Compact Gasifier, Natural Gas Partial Oxidation, RTI's Warm Syngas Cleaning, and Syngas-to-Liquids (STL) technologies are anticipated to be advanced by their inclusion in the hybrid process

Objective

- Advance constituent technologies of the hybrid process to TRL 5-7
- Produce jet-fuel intermediate suitable for upgrading into jet-fuel by commercial refinery processes
- Establish basis for technology deployment in 5 to 15 years

Scope of Work

- Bench-scale STL reactor system to provide liquid hydrocarbon samples suitable for upgrading to jet fuel
- Integrated operation of AR's gasifier and POX units with RTI's STL process at pilot-scale (~1 bbl/day)
- Product from pilot-scale operations to be upgraded by Axens into jet fuel
- Detailed techno-economic analyses based on experimental data collected from pilot-scale testing
- Commercialization plan for technology deployment

Accomplishments

Project Team

- RTI International, Aerojet Rocketdyne (AR), Gas Technology Institute (GTI), Axens

Duration

- 10/01/2014 – 09/30/2016

Indirect Liquefaction of Coal-Biomass Mixtures for Production of Jet Fuel with High Productivity and Selectivity

Southern Research Institute

Program Strategy

- CTL to produce commercially viable quantity of jet fuel that is cost competitive with that from petroleum, and with equal or lower carbon footprint

Benefits

- Compact Autothermal Reactor, Hybrid FT Catalyst, and Efficient Heat Removal Incorporated Fixed-Bed Reactor technologies are anticipated to be advanced

Objective

- Production of hydrocarbon product from coal/biomass blend, to be directly blended with petroleum-based jet fuel
- Reduce the cost, increase process efficiency and improve the life-cycle for CTL production of jet fuel through process intensification design upgrades for the reactor, catalyst and catalyst bed configuration

Scope of Work

- Improve a compact, pressurized, high temperature autothermal reformer
- Develop a second generation hybrid Fischer-Tropsch catalyst
- Incorporate a novel and efficient heat-exchange reactor system for near-isothermal catalytic operation
- Techno-economic analysis and life cycle analysis

Accomplishments

Project Team

- Southern Research Institute, Chevron Energy Technology Company , Precision Combustion Inc., IntraMicron, National Carbon Capture Center, Nexant, Southwest Research Institute

Duration

- 10/01/2014 – 03/31/2017

Green-House-Gas-Reduced Coal-and-Biomass-to-Liquid-Based Jet Fuel (GHGR-CBTL) Process

Altex Technologies Corporation

Program Strategy
- CTL to produce commercially viable quantity of jet fuel that is cost competitive with that from petroleum, and with equal or lower carbon footprint

Benefits
- Combines lower temperature fast pyrolysis and the production of a targeted intermediate that can be converted to a liquid hydrocarbon fuel at a lower cost than gasification/Fischer-Tropsch methods

Objective
- Design, fabricate, test, and assess the performance of a greater than 1 barrel per day process to produce synthetic JP-8 jet fuel

Scope of Work
- Obtain coal/biomass feedstocks
- Determine GHG footprint of Altex process
- Design, construction and housing of 1 BPD system; testing and operation of system
- Techno-economic analysis

Accomplishments

Project Team
- Altex, Unitel, UC Davis, Argonne National Laboratory, Penn State University

Duration
- 10/01/2014 – 09/30/2016

Direct Coal to Liquid for Jet Fuel Using Biomass Derived Solvents

Battelle Memorial Institute

Program Strategy

- CTL to produce commercially viable quantity of jet fuel that is cost competitive with that from petroleum, and with equal or lower carbon footprint

Benefits

- High hydrogen-donor bio-oil solvents and two-stage catalytic syncrude hydrogenation/hydrotreating technologies to be advanced by the project development efforts
- Eliminating molecular hydrogen required for producing syncrude

Objective

- Develop a hybrid, direct coal/biomass to liquids jet fuel process using novel biomass-derived solvents with excellent hydrogen-donor capability
- Demonstrate a straightforward path to near-term commercial production, a significant reduction in capital and operating costs, and a substantial reduction in greenhouse gas emissions without requiring carbon capture and storage

Scope of Work

- Develop and refine major process steps at continuous bench scale, including: (1) biomass conversion to high hydrogen-donor solvents; (2) coal dissolution in biomass-derived solvents to produce syncrude; and, (3) two-stage catalytic hydrogenation/ hydrotreating of syncrude to jet fuel and other distillates
- Scale-up to continuous, pre-pilot scale
- Estimates of process economics and GHG emissions reduction

Accomplishments

Project Team

- Battelle Memorial Institute, Quantex, ARA, Intertek, PennState, UDRI

Duration

10/01/2014 – 09/30/2016

Technology for GHG Emission Reduction and Cost-Competitive Mil-Spec Jet Fuel Production Using CTL

Ceramatec Inc.

Program Strategy

- CTL to produce commercially viable quantity of jet fuel that is cost competitive with that from petroleum, and with equal or lower carbon footprint

Benefits

- Molten Salt Gasification (MSG), sulfur removal system and hybrid catalyst technologies are anticipated to be advanced by the project development efforts

Objective

- Demonstrate the production of jet fuel from a coal and glycerol or other biomasss
- Integrate several unique technologies to produce a product that may be directly blended with jet fuel from petroleum based sources

Scope of Work

- Utilize existing molten salt gasifier to produce synthesis gas from coal-water slurry
- Clean synthesis gas using efficient sulfur removal system
- Input syngas to a innovative, cost-effective fixed-bed reactor loaded with a hybrid FT catalyst providing high selectivity to the desired jet fuel hydrocarbon range
- Generate about ½ BPD of FT liquids that meet the Jet A distillation curve; deliver sample (~10 gallons) to the DOE/USAF for characterization

Accomplishments

Project Team

- Ceramatec, WHL, Chevron, Hunt Oil

Duration

10/01/2014 – 09/30/2017

NETL Office of Research & Development

Coal and Coal-Biomass to Liquids Program

Systems Analysis

Coal and Coal-Biomass to Liquids Program

NETL ORD Focus for C&CBTL Research FY14

Polygeneration Market Assessment

- Assessment of the "best" chemicals to be included in a polygeneration process
- Conducting a high-level study evaluating size and demand of markets for chemical targets and predicted changes over a 5- to 10-year timeline

Engineering-Scale Performance and Economic Assessment of Technologies for Polygeneration

- Techno-economic assessments utilizing research data from the best performing technologies, catalysts, materials, and engineering concepts
- Advancing the technological maturity of the most promising R&D technologies by generating experimental performance data to perform plant-level techno-economic assessments to evaluate the suitability for large-scale deployment

Transformational Technologies for Polygeneration

- Generating new catalysts and materials for improving the efficiency and economics associated with converting coal-based feeds into aromatics, olefins, and other chemical products
- Evaluating new reactors and chemical processes to translate novel catalysts and chemistries into functioning engineering devices
- Evaluating approaches for lowering reaction temperatures, improving process conditions/economics, and enhancing reaction rates

NETL's Program Analysis Support

Recent, On-going and Planned C&CBTL Studies

Fischer-Tropsch Liquids Reports

- " Affordable, Low-Carbon Diesel Fuel from Domestic Coal and Biomass, " 2009
- " Production of Zero Sulfur Diesel Fuel from Domestic Coal: Configurational Options to Reduce Environmental Impact ," 2011, *Revision/expansion in progress*
- "CBTL Pathway Studies," *In progress*
- " Comprehensive Analysis of Coal and Biomass Conversion to Jet Fuel: Oxygen Blown, Transport Reactor Integrated Gasifier and Fischer-Tropsch Catalyst Configurations ," 2013
- " Chemical-Looping Process in a Coal-to-Liquids Configuration, " 2007
- Gas-to-Liquids Study ,"2013

Baseline Technology Assessments

- " Baseline Technical and Economic Assessment of Commercial Scale Fischer-Tropsch Liquids Facility, " 2007
- CTL Baseline Study "Cost and Performance Baseline for Fossil Energy Plants, Volume 4: Coal-to-Liquids via Fischer-Tropsch Synthesis," *In progress*
- Synergistic Production of Transport Fuels (Diesel, Jet, Gasoline) from Coal, *In progress*

NETL's Program Analysis Support *cont.*

Recent, On-going and Planned C&CBTL Studies

Methanol, Ammonia and Derivatives

- Baseline Analysis of Crude Methanol Production from Coal and Natural Gas, *In progress*
- Baseline Analysis of Subbituminous Coal and Biomass to Gasoline (Indirect Liquefaction by Methanol Synthesis), *In progress*

Synthetic Natural Gas and Ammonia

- " Cost and Performance Baseline for Fossil Energy Plant – Volume 2: Coal to Synthetic Natural Gas and Ammonia," 2011

Hydrogen

- "Production of Higher Purity Hydrogen from Domestic Coal: Assessing the Techno-Economic Impacts of Emerging Technologies," 2010
- "Assessment of Hydrogen Production with CO_2 Capture Volume 1: Baseline State of the Art Plants," 2010

NETL's Coal and Coal-Biomass to Liquids Webpage

http://www.netl.doe.gov/research/coal/energy-systems/fuels/coal-and-biomass-to-liquids/