the Energy to Lead

Development of Porous PEEK® Hollow Fiber-based Gas/Liquid Membrane Contactors for Sour Gas Treating

> Dennis Leppin, P.E., Presenter

> Dr. Shaojun Zhou, Howard Meyer, Dr. Shiguang Li, GTI

> Dr. Ben Bikson, Dr. Yong Ding, PoroGen Inc.

gti

Introduction

- GTI and PoroGen Inc. have teamed to develop a hollow fiber membrane contactor (HFMC) technology using PoroGen's patented fiber manufacturing technology and knowhow
- Focus is on CO_2 removal from natural gas to achieve pipeline and LNG specifications
- HFMC for both absorber and regenerator
- Lab-scale testing of high-pressure absorption and lower-pressure regeneration, field experiments for absorption and regeneration using slipstream from coal-fired power plant flue gas
- Advantages to be confirmed are lower weight, smaller size systems, insensitivity to motion for offshore operations, no flooding, high turndown-ratio, modularity, shop fabrication for any capacity

Technology Description

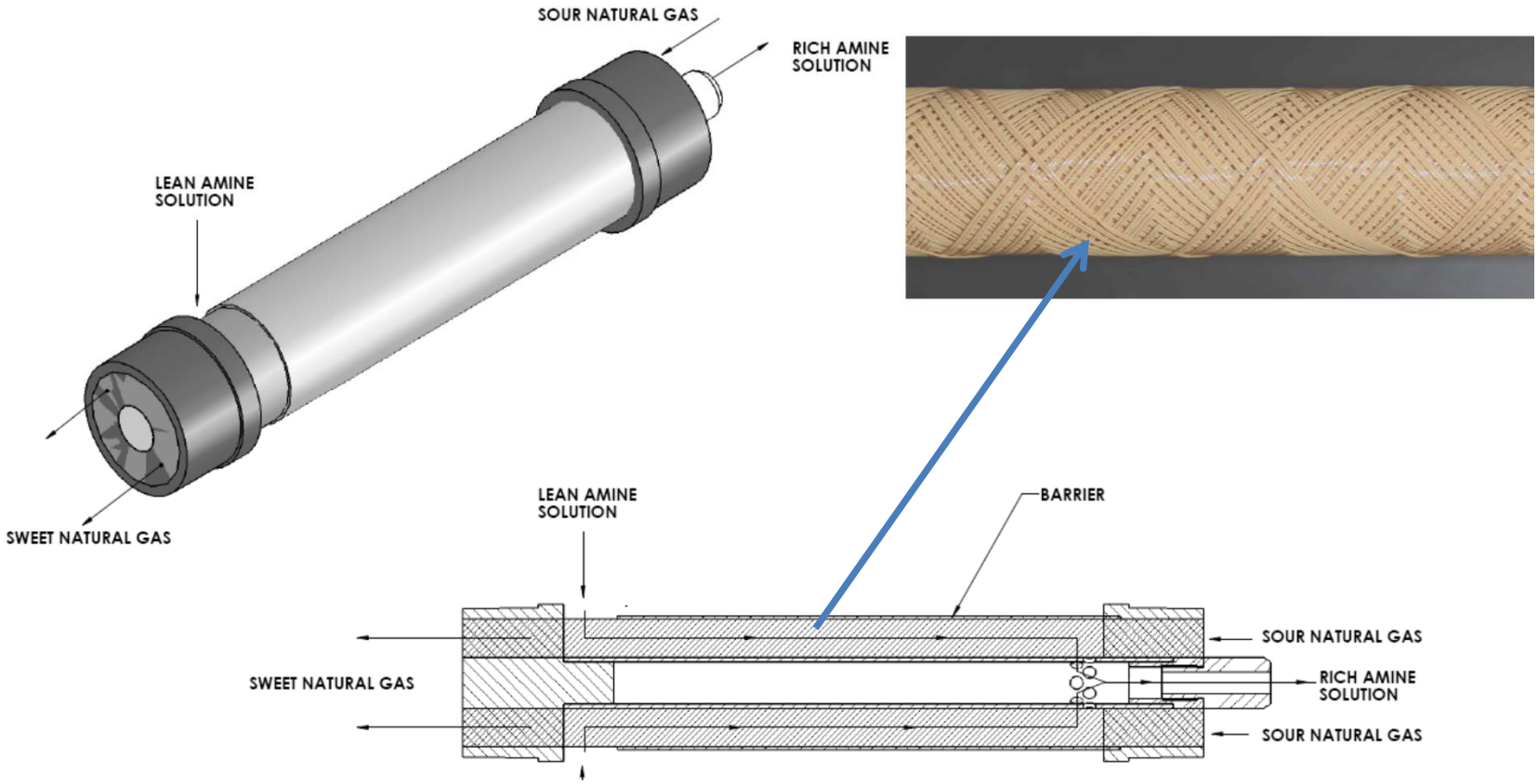

Technology Description

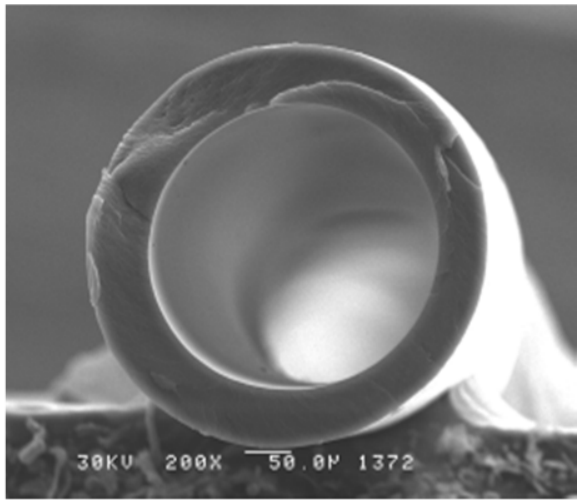

Nanoporous PEEK fiber wall

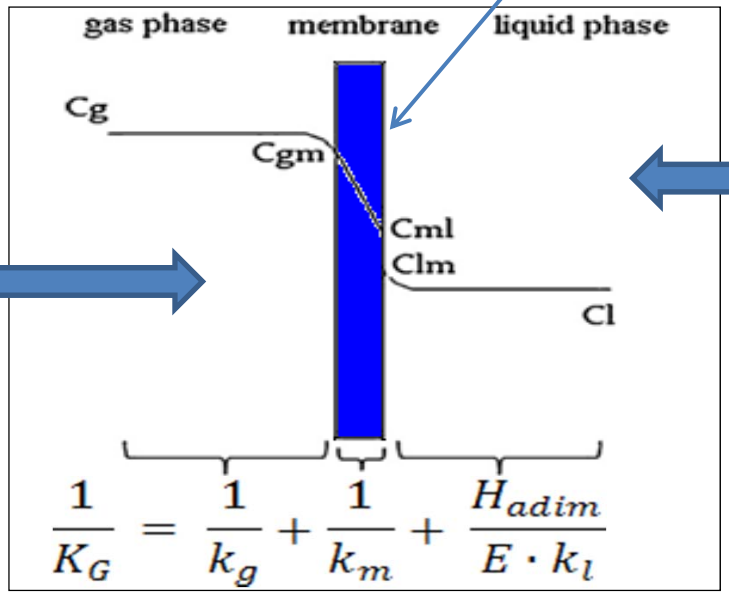

Shell-side

Bore-side

$$\frac{1}{K_G} = \frac{1}{k_g} + \frac{1}{k_m} + \frac{H_{adim}}{E \cdot k_l}$$

Mass Transfer Performance

Comparison to Other Technologies

Gas-liquid contactor	Specific surface area, (m^2/m^3)	Volumetric mass transfer coefficient, $(sec)^{-1}$
Packed column (Countercurrent)	10 – 350	0.0004 – 0.07
Bubble column (Agitated)	100 – 2,000	0.003 – 0.04
Spray column	10 – 400	0.0007 – 0.075
Membrane contactor	**100 – 7,000**	**0.3 – 4.0**

Laboratory Test Rig:
Pressure up to 70 bar
2 ℓ/min solvent
1,000 SCFH feed gas
Integrated or stand-alone
absorber or desorber

Laboratory Flow Schematic – Absorption Section

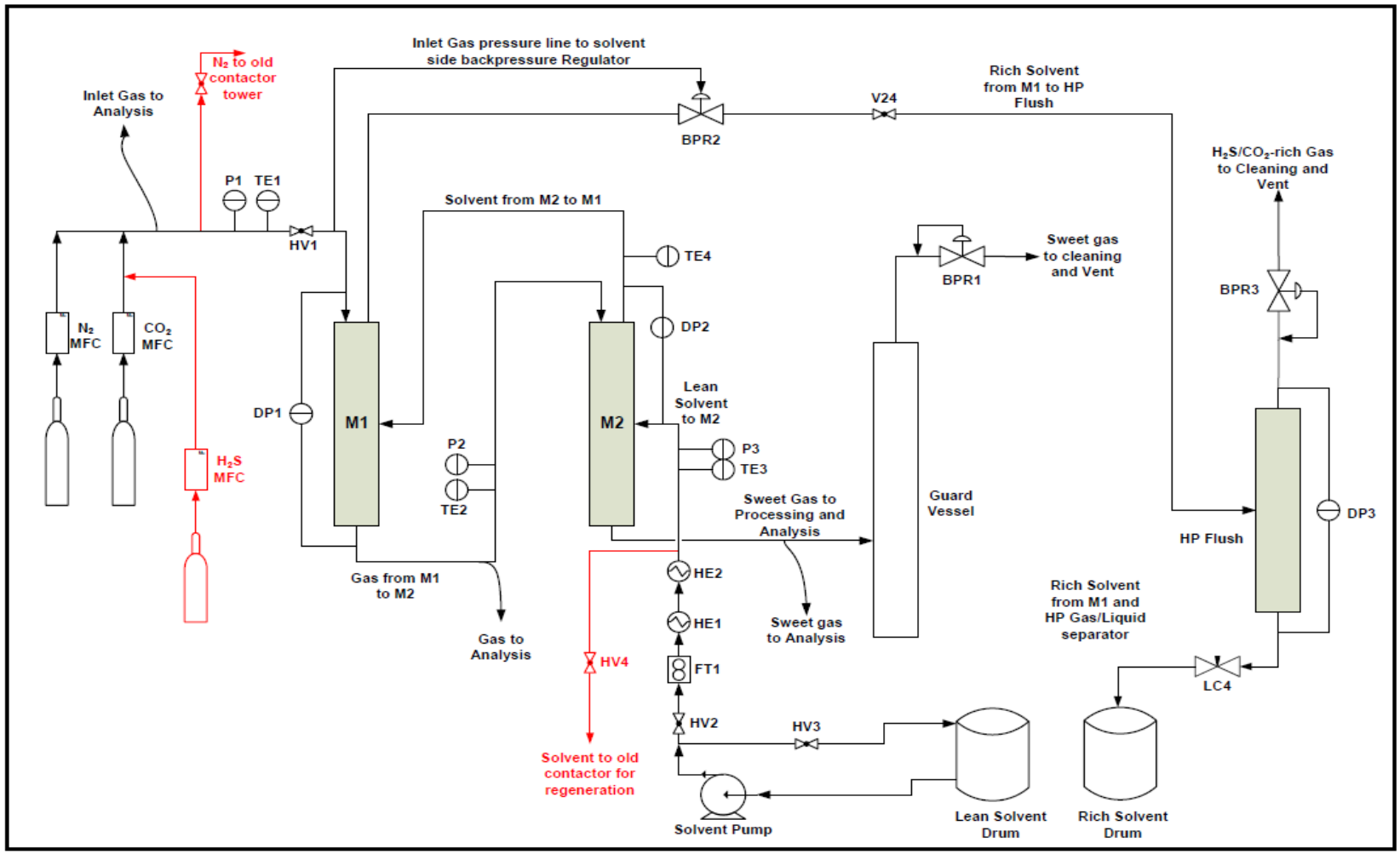

Laboratory Flow Schematic – Desorption Section

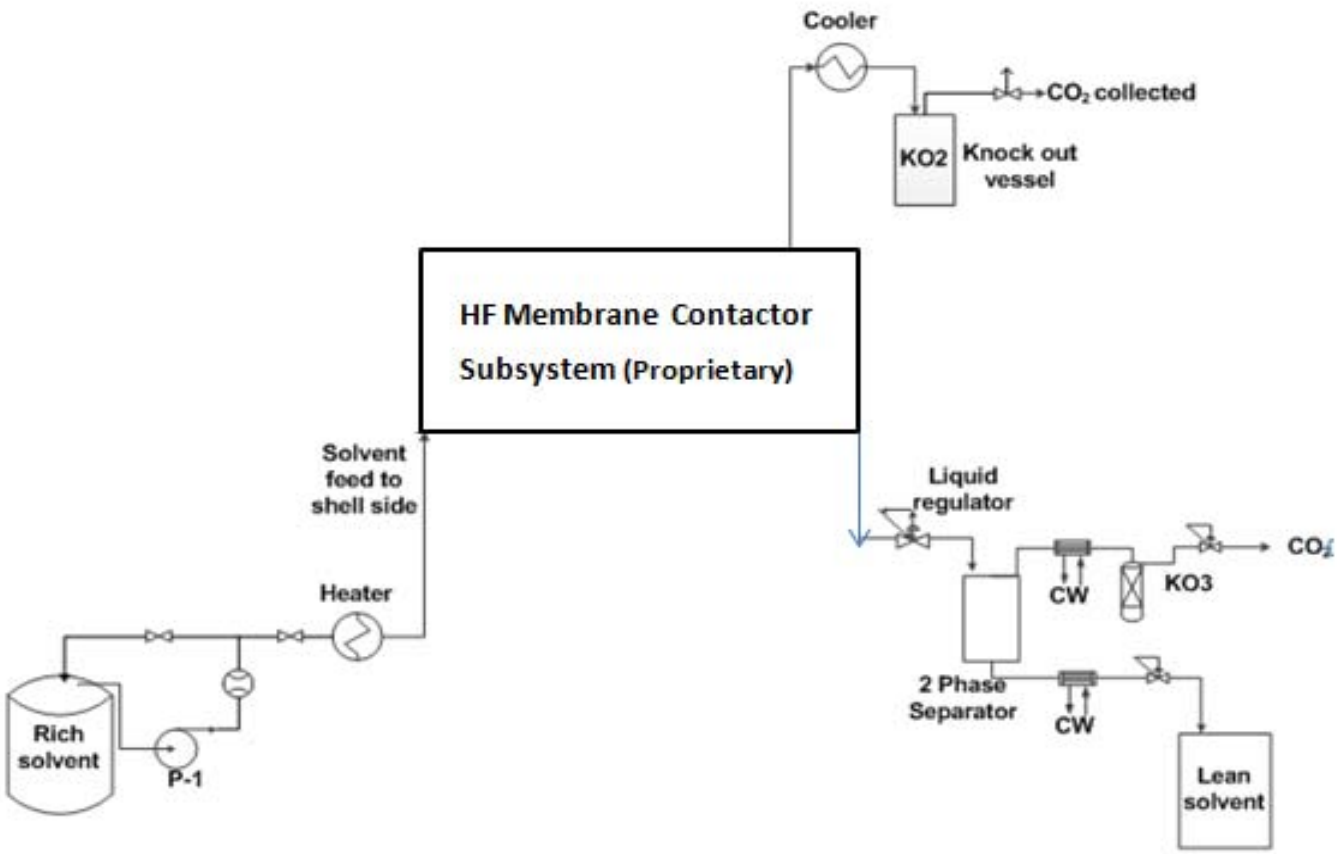

Absorber Performance

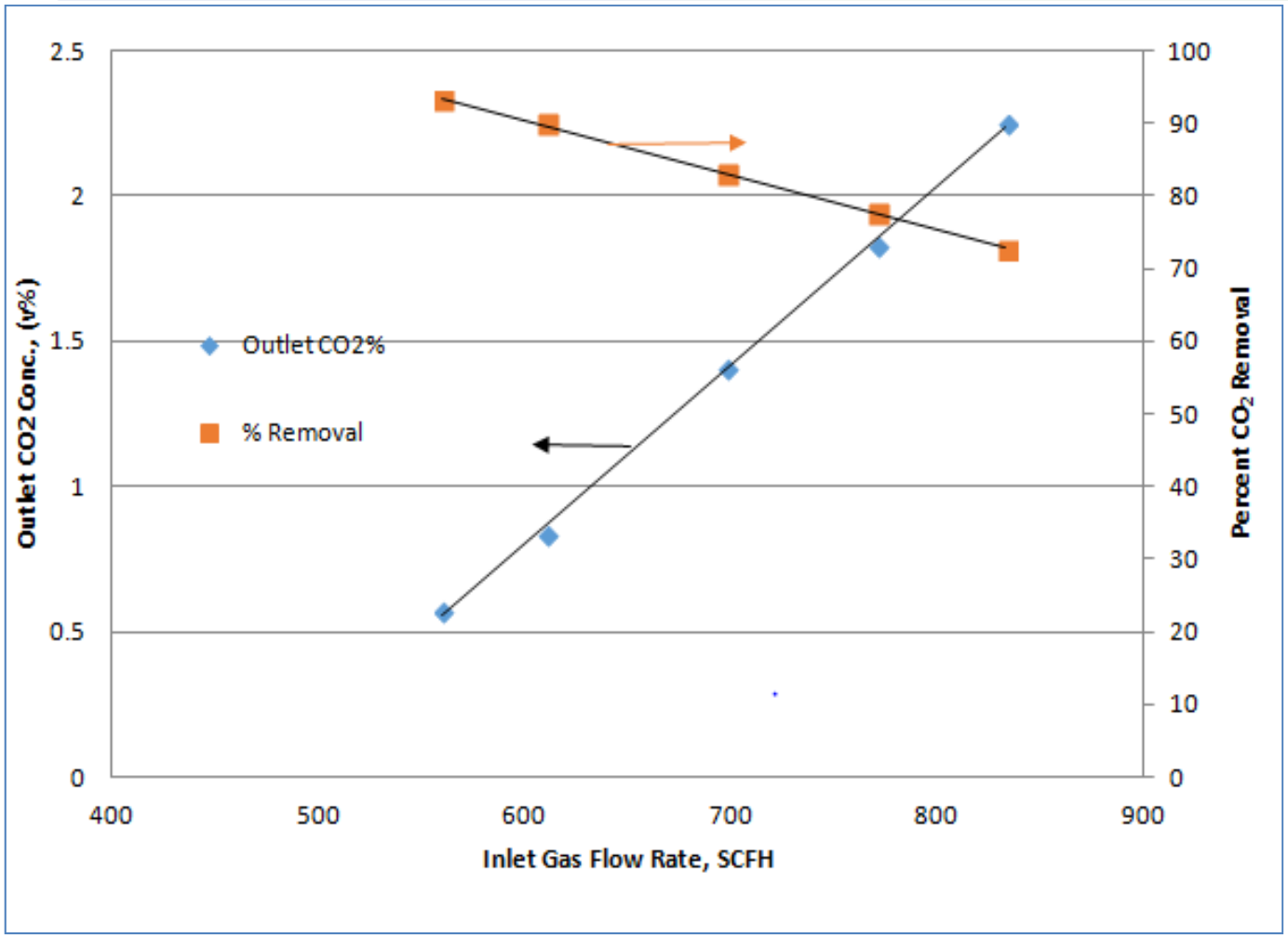

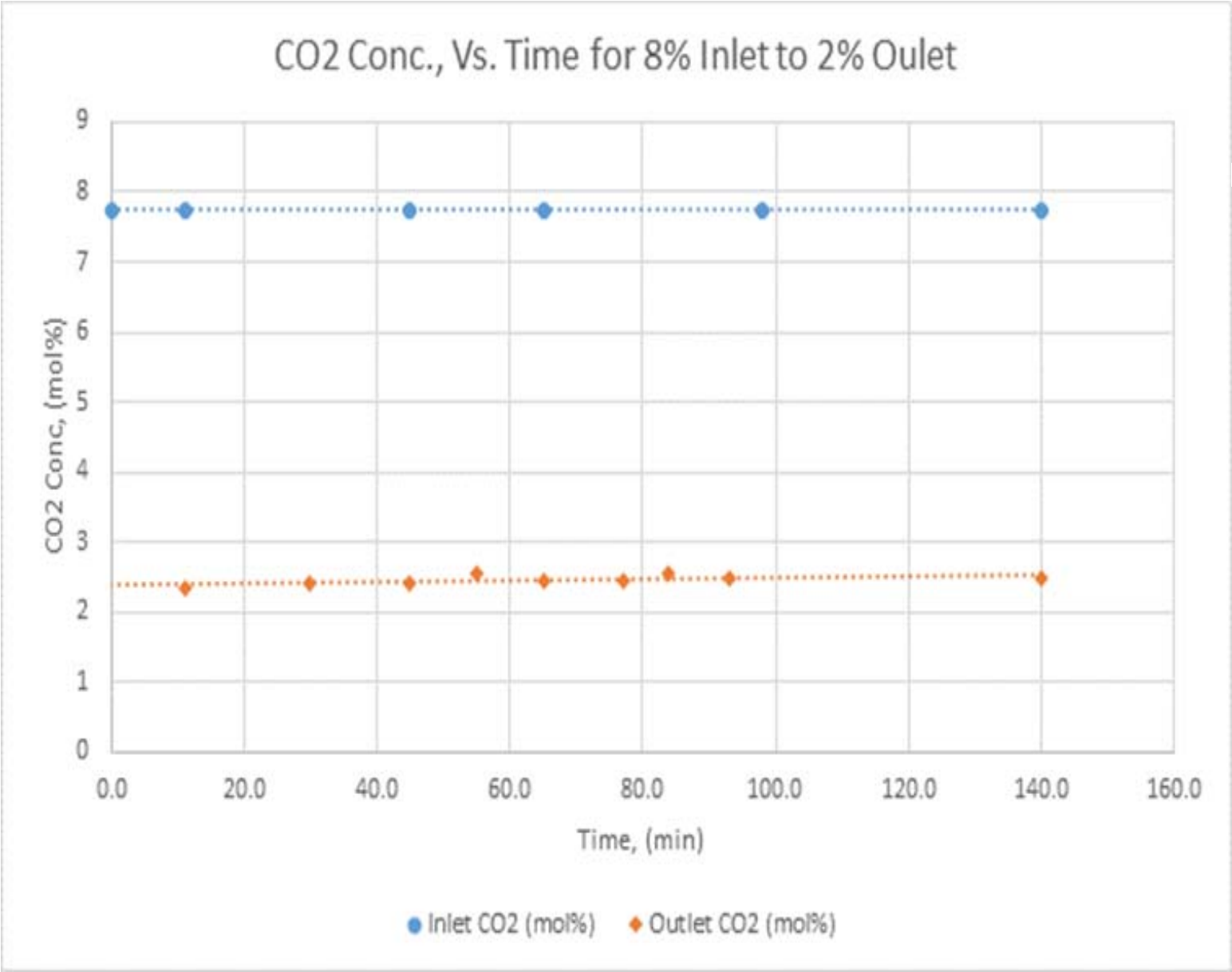
CO2 Conc., Vs. Time for 8% Inlet to 2% Oulet
CO2 Conc, (mol%)
9
8
7
6
5
4
3
2
1
0
0.0
20.0
40.0
60.0
80.0
100.0
120.0
140.0
160.0
Time, (min)
Inlet CO2 (mol%)
Outlet CO2 (mol%)

Absorber Performance – Pipeline CO_2 specifications (~2 vol%)

> Adjustment of liquid flow rate affects exit CO_2 concentration

> Higher liquid rate = lower CO_2 concentration

> Attainment of pipeline specifications shown with single membrane module

> These tests with 40 wt% (incl. 8 wt% piperazine) aMDEA at 950 psia,

T = 76 °F – non-integrated (no regenerator, once-through solvent)

> 1.6 ℓ/min solvent rate, 800 SCFH feed gas rate

> Nominal 2 in. diameter module, 2,000 GPU, ~7,000 cm^2 outside fiber area, ~1,200 fibers

> K_G = 825 – 1150 **mol/(m³·hr·Kpa),** or 0.5 -0.7 s-1

Achieving LNG Specs

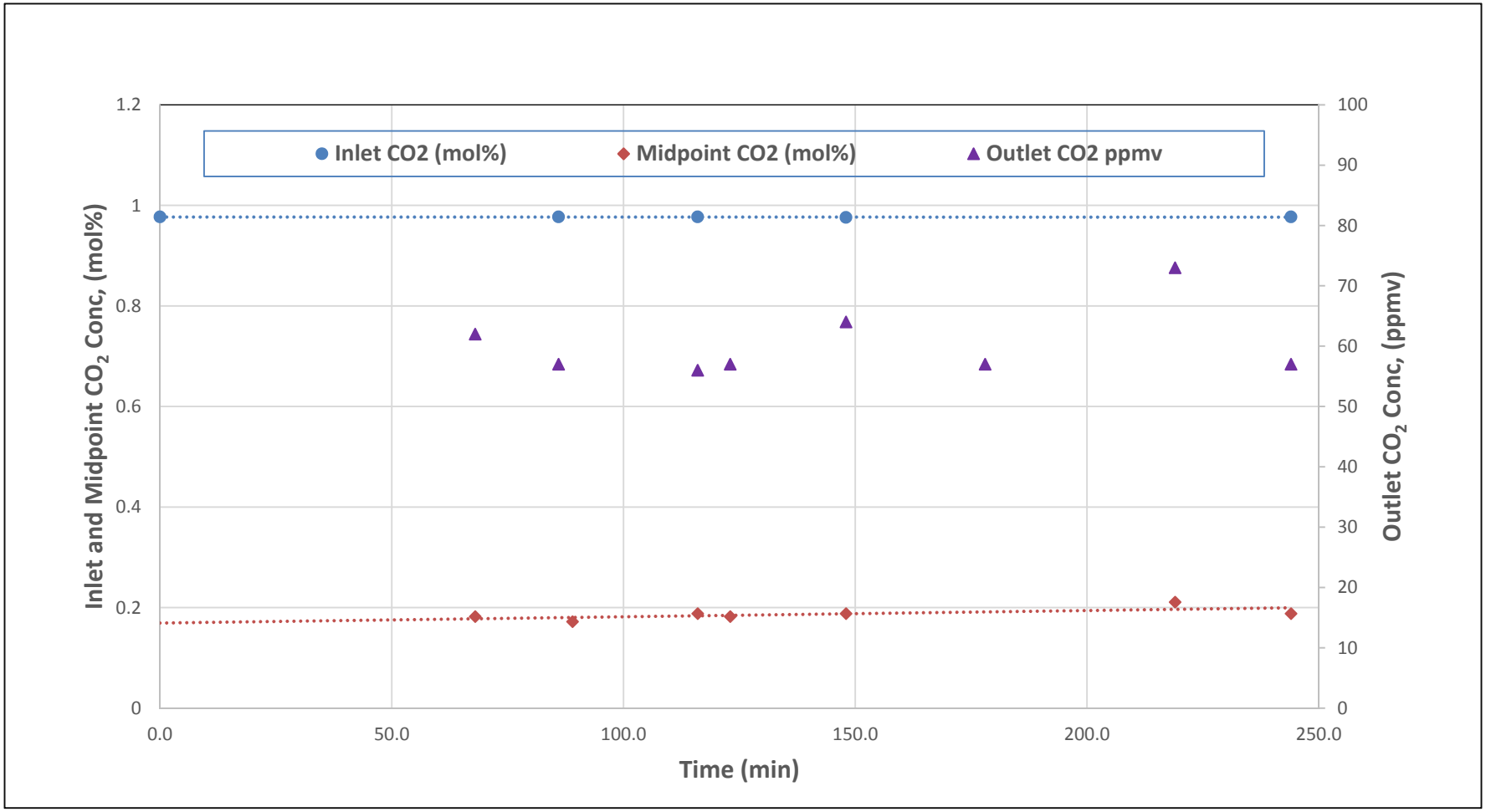

Absorber Performance – LNG Specs

- This was a non-integrated test (absorber-only)
- Feed gas at 1% CO_2, very lean aMDEA solvent used
  - First-stage membrane would be used to reduce feed to 1 - 2 vol% CO_2, as shown separately
- 50 ppmv CO_2 specification on outlet reached (approximately)
  - We have shown elsewhere that lowering gas flow slightly will achieve <50 ppmv CO_2
- Excursion at ~220 min. deliberate – returned to previous level when disturbance returned to original value

Integrated Test (~8 vol% CO_2 to ~2 vol% CO_2

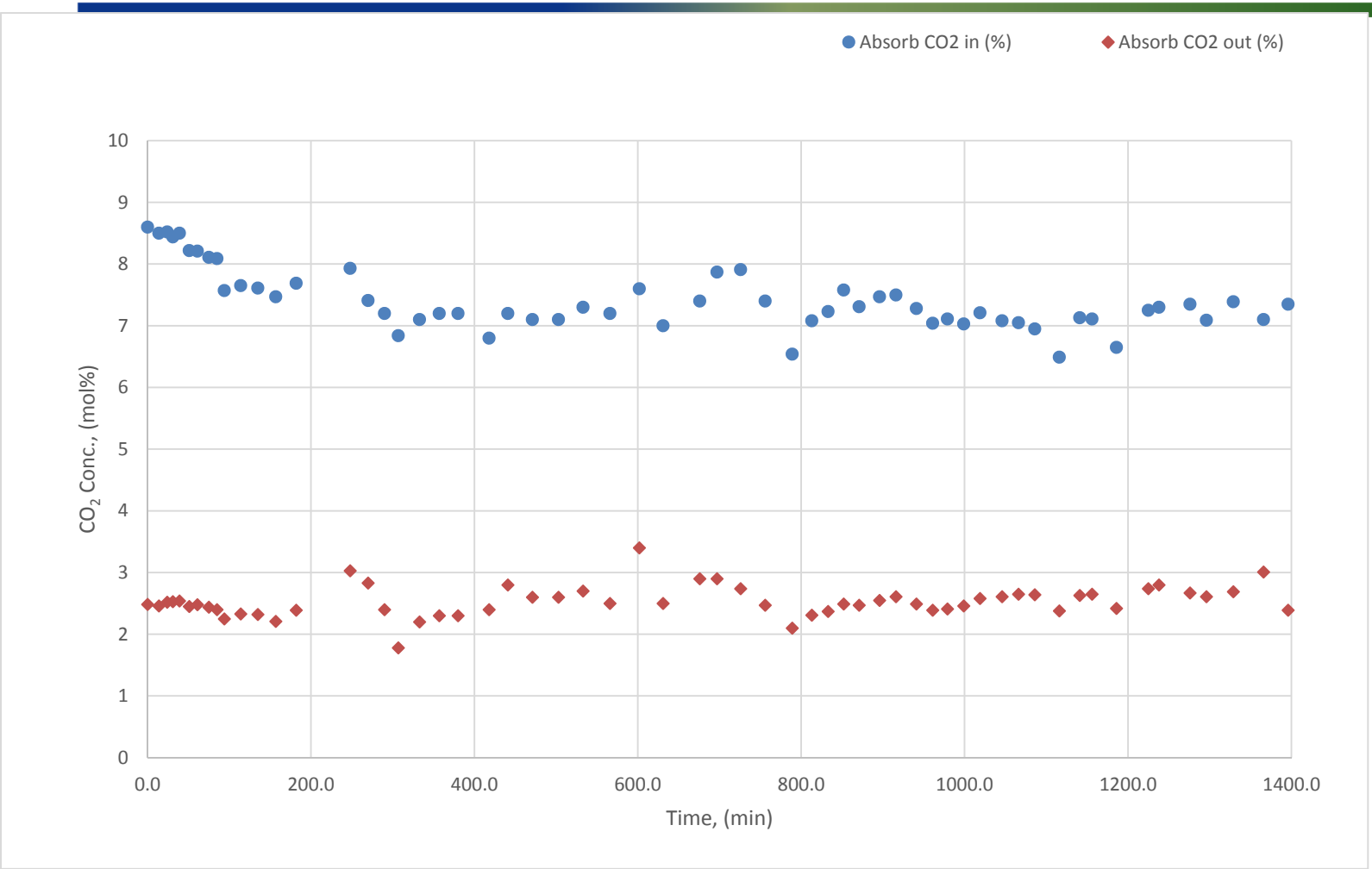

Absorber Performance – Integrated Test

- All membrane contactor–based process
- Regenerator use directly to produce the lean solvent to the absorber
  - Lean solvent ~0.1 wt% CO_2 or 0.0064 mol CO_2/mol amine
  - 23 solvent turnovers
- After startup adjustments, results stable over ~24 hr. test
- Outlet tracks inlet concentrations
- Slightly lower gas flow in test will likely produce <2 vol% CO_2 in outlet
  - When CO_2 in inlet was below 7% outlet approached 2%

Absorber Performance – Effect of H_2S

- Test performed when meeting LNG specs
  - Feed Gas at 1 vol% CO_2 and 950 psig, 71 °F
- 26 ppmv CO_2 at 297 SCFH and 45 ppmv CO_2 at 520 SCFH, aMDEA flow at .35 ℓ/min
- Spiked in H_2S at different levels:
  - At low-level (250 ppmv) H_2S non-detectible (limit 0.1 ppmv) in exit gas
  - At high-level (500 ppmv), H_2S ~4 ppmv in exit gas
  - CO_2 unchanged

Integrated Flue Gas Carbon Capture Testing

- All membrane contactor–based process
- Regeneration configuration similar to natural gas treating application
- At a Midwest Generation power plant site in Illinois
- Funded by DOE and ICCI (with funds from the State of Illinois)
  - Flue gas with ~9 -10% CO_2
  - Slipstream removing ~ 100 - 135 lbs/day CO_2
  - Modules with ~100 ft^2 of area
  - Tests of aMDEA and H3-1 (Hitachi solvent)

Field Experiment Testing Rig

Module Scale Up

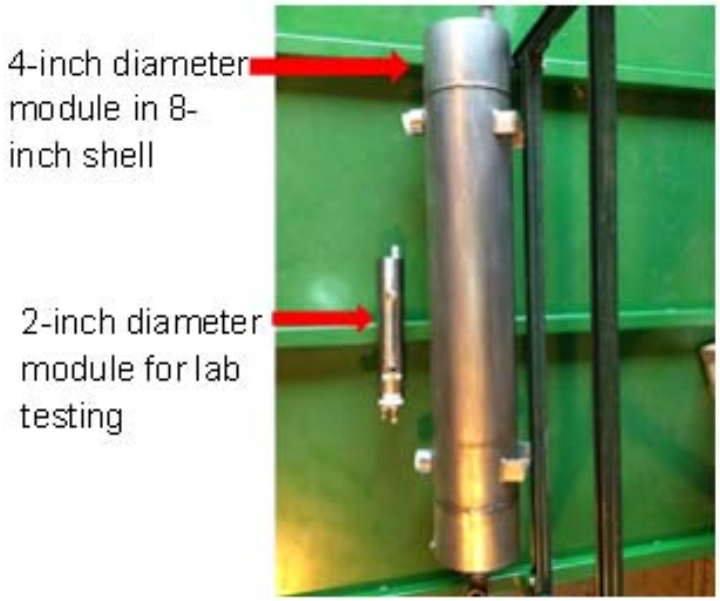

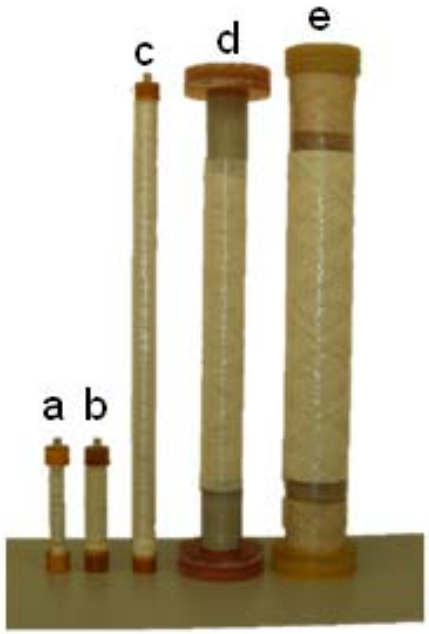

Field Experiment Conditions

Parameter	Condition
Solvents	40 wt.% aMDEA/H_2O, and H3-1
Membrane Absorption	
Membrane contactor surface area	11 m^2
Gas inlet temperature	46-60 °F
Gas flow rate	17-250 L/min
Inlet gas pressure	1.20-1.70 psig
Inlet gas CO_2 concentration	~9.5 vol%
Solvent inlet temperature	55-61°F
Solvent flow rate	1-6 L/min
Inlet solvent pressure	4-12 psig
Membrane Desorption	
Membrane contactor surface area	11 m^2
Solvent inlet temperature	220-250 °F
Solvent outlet temperature	160-220 °F
Liquid flow rate	1-2 L/min

Field Experiment Chronology

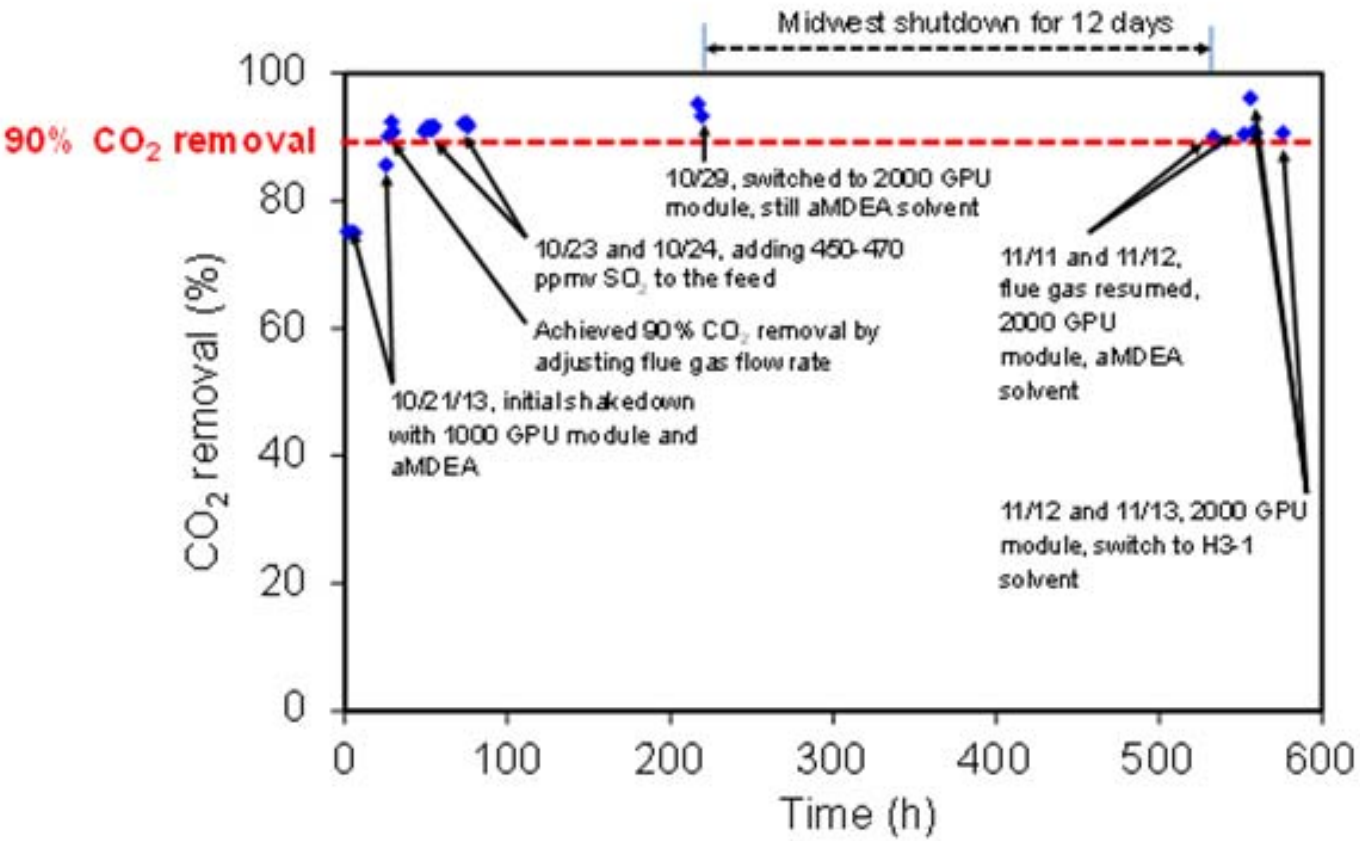

Integrated Flue Gas Carbon Capture Testing – Preliminary Results

- Attained target CO_2 removal with both solvents
- 200 - 300 hundred hours of operation logged
- Presence of SO_2 (up to ~500 ppmv) did not affect CO_2 removal
- Mass transfer coefficients >1 s^{-1} obtained (with 2,000 GPU module)
- H3-1 does appear to have better mass transfer coefficient by ~17%
- Results hampered by undersized flue gas blower/motor
- Upgrades on order for next round of tests

Next Steps

- Continued bench and field testing
  - Improve model, understand process at fundamental level
  - Get more onstream time, data
  - Optimize membrane configurations
- Obtain commercialization partner
  - Provide engineering support, sales support
- Scale up efforts
  - Larger module fabrication
  - Skid package design with pre-treatment

Next Steps (continued)

- Pilot Plant Testing (Natural Gas)
  - Obtain test site
  - Objective to test nominal 8 in. diameter, 1,000 ft^2 modules – 10X scale up
  - Look at pretreatment requirements, startup and shutdown procedures, etc.
  - Longer-term testing to confirm membrane durability, performance life
- CO_2 Capture Pilot Plant at NCCC
  - 1 MWe slipstream testing with coal plant flue gas
  - DOE-funded project

Conclusions

- Promising R&D results
  - High mass transfer rates confirmed for HFMC
    - Up to an order of magnitude greater than towers
  - Absorption and regeneration schemes tested successfully
- Path going forward identified
  - JIP supported by 6 major oil and gas companies
    - Next phase solicitation being evaluated
  - DOE slipstream testing at National Carbon Capture Center (NCCC)

Acknowledgements

> GTI and PoroGen gratefully acknowledge the financial support provided by JIP Sponsors for the natural gas treating part of this work. GTI and PoroGen also gratefully acknowledge the financial support provided by US DOE and by the Illinois Clean Coal Institute with funds made available by the State of Illinois, and Midwest Generation for the post-combustion part of this work.