Pilot-Scale Evaluation of an Advanced Carbon Sorbent-Based Process for Post-Combustion Carbon Capture

Project Review Meeting

October 28, 2014

Project Objectives

- Demonstrate the advanced carbon sorbent-based post-combustion capture technology in a 1 MWe slip-stream pilot plant.
- Achieve >90% carbon dioxide (CO_2) removal from coal-derived flue gas.
- Demonstrate significant progress toward the achievement of the U.S. Department of Energy (DOE) cost target of <$40/tonne of CO_2 captured.

Basic Principles

- Physical adsorption of CO_2 from flue gas on a selective and high capacity carbon sorbent.
- Ability to achieve rapid adsorption and desorption rates (no solid state diffusion limit).
- Minimize thermal energy requirements.
- Ability to produce pure CO_2 stream suitable for compression and pipe line transportation.
- A continuous, falling micro-bead sorbent reactor geometry integrates the adsorber and stripper in a single vertical column
  - Provides a low pressure drop for gas flow and minimize physical handling of the sorbent.

Large Bench-Scale Testing at NCCC

- Previously tested at SRI using air-CO_2 mixture and with steam boiler flue gas at the University of Toledo.
- Testing with a flue gas from a PC-fired boiler.
- Test goal: 150 h of continuous operation; 1,000 h of total operation.
- Completed ~250 h of operation.

System for Tests at NCCC

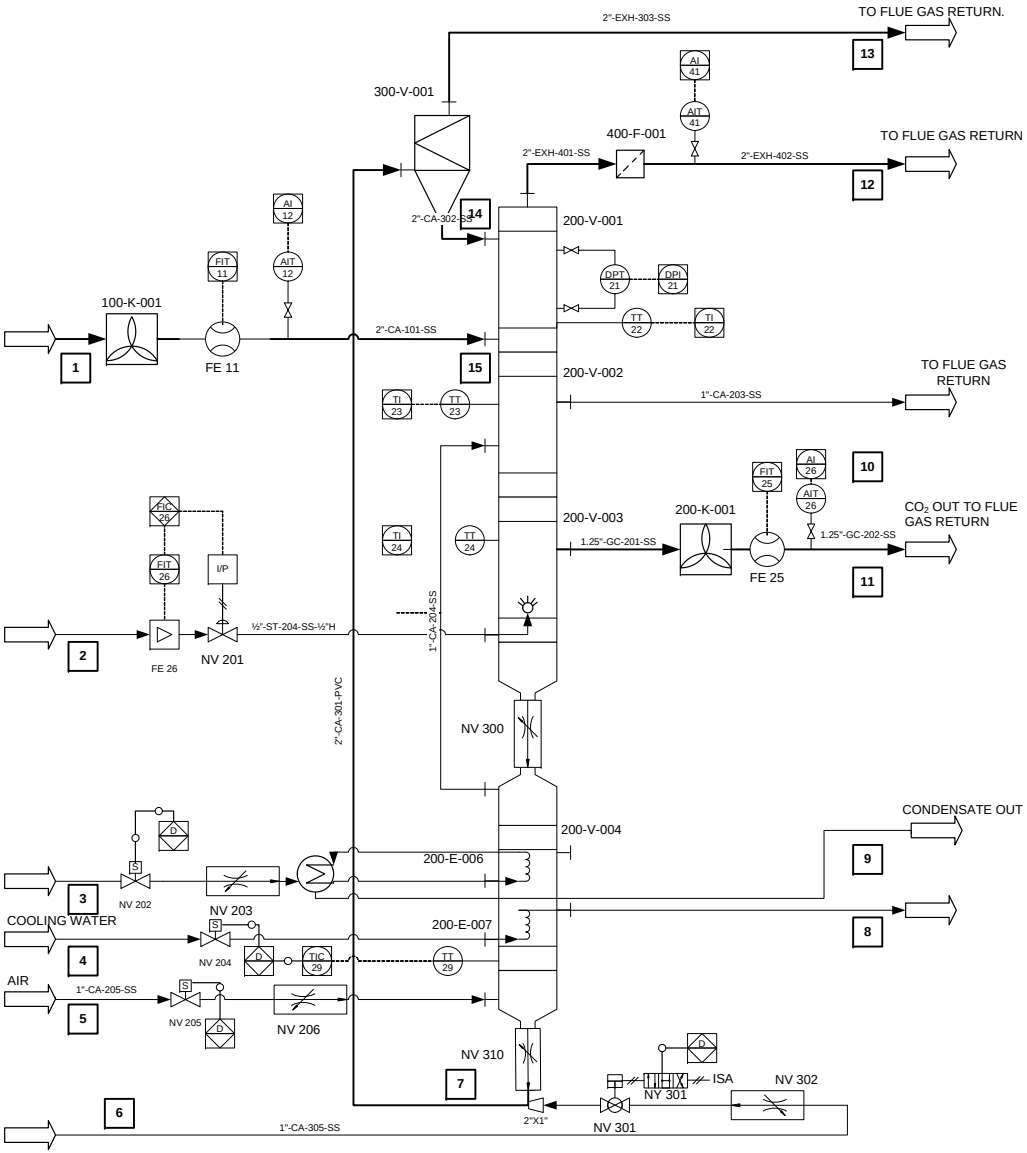

Design of Integrated Reactor for Testing at NCCC

- System Dimensions:
  - 50 ft tall; 4 ft x 4 ft foot print
  - Adsorber: 9-ft tall; 18 inch square
  - Stripper: 15-ft tall; 12 inch square
- A heat exchanger to recover sensible heat from hot, regenerated sorbent and use it to preheat the sorbent from the adsorber.
- Pneumatic transport of the sorbent microbeads.
- Nominal flue gas flow: 70 cfm (2000 liters/min).
- Goal: 90% CO_2 capture and >98% CO_2 purity product.
- CO_2 capture capacity: ~1 ton/day.

Installed Structure at NCCC Pad

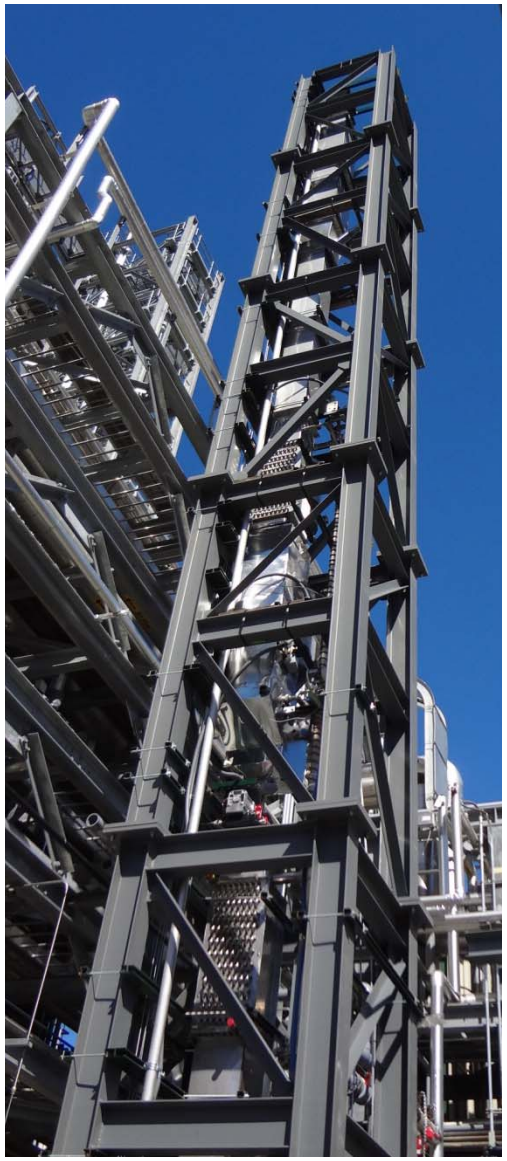

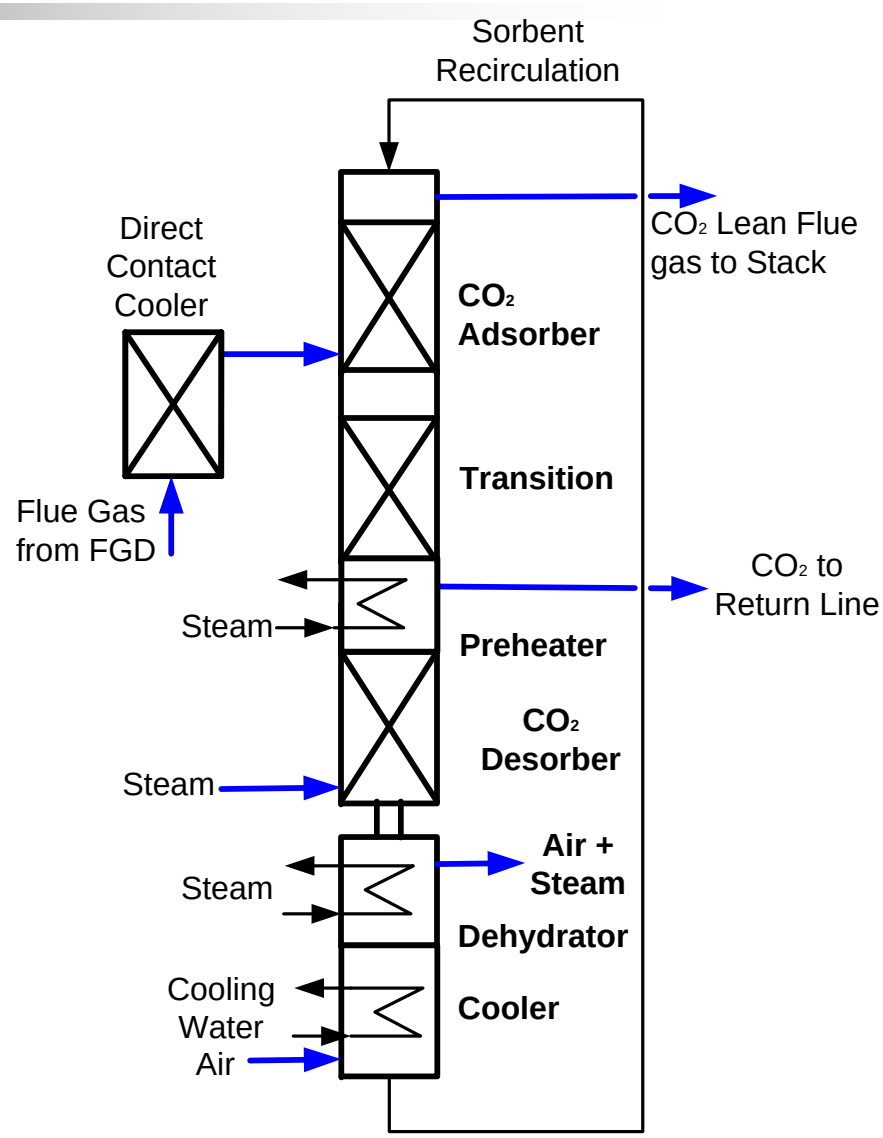

Sorbent flow is controlled at the top of adsorber, bottom of stripper, and bottom of sorbent cooler.

Composition Profiles in the Reactor Column

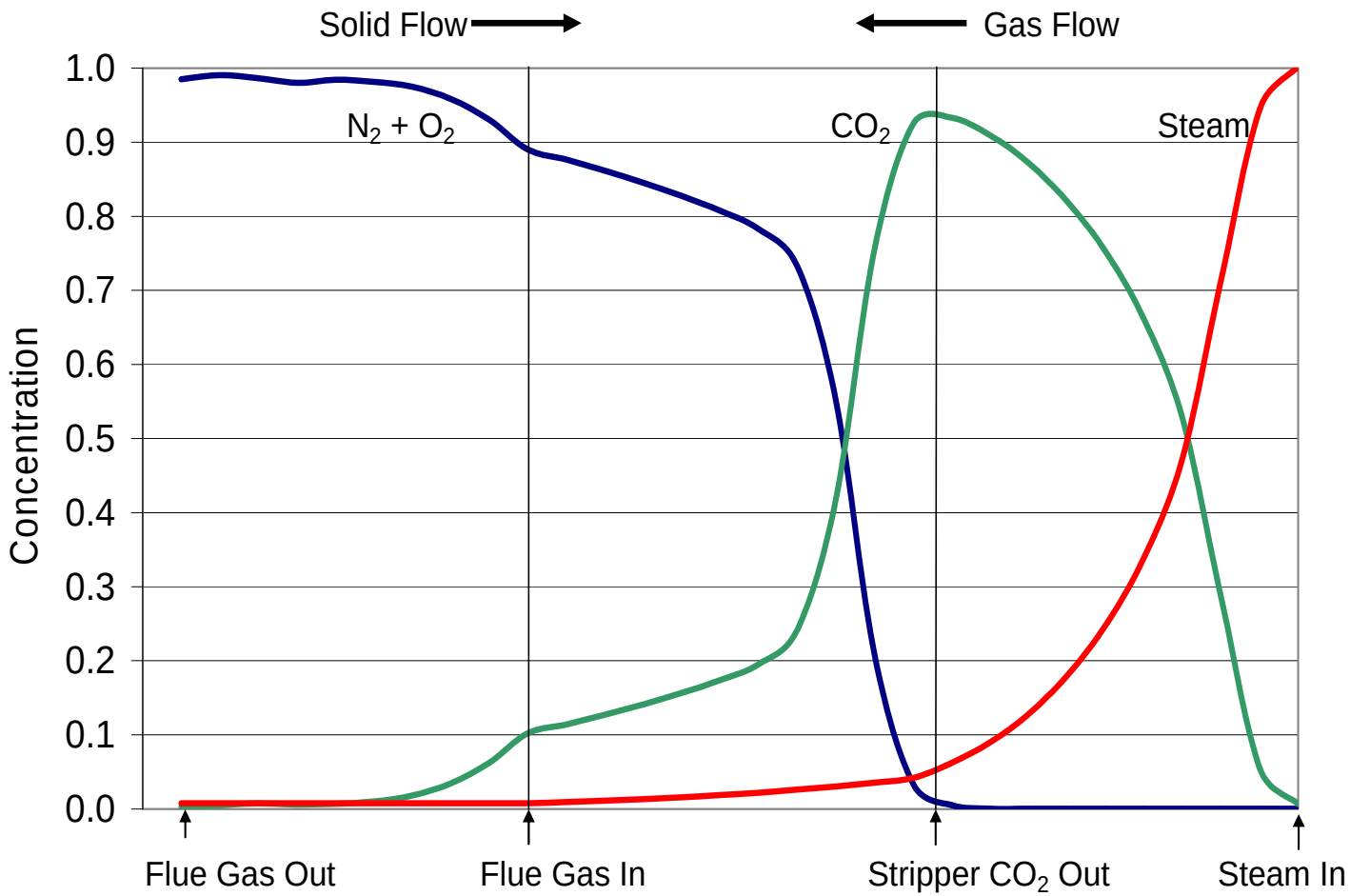

Achieving a high capture efficiency and product purity requires establishing proper composition profiles at various stages.

Flue Gas Control Test

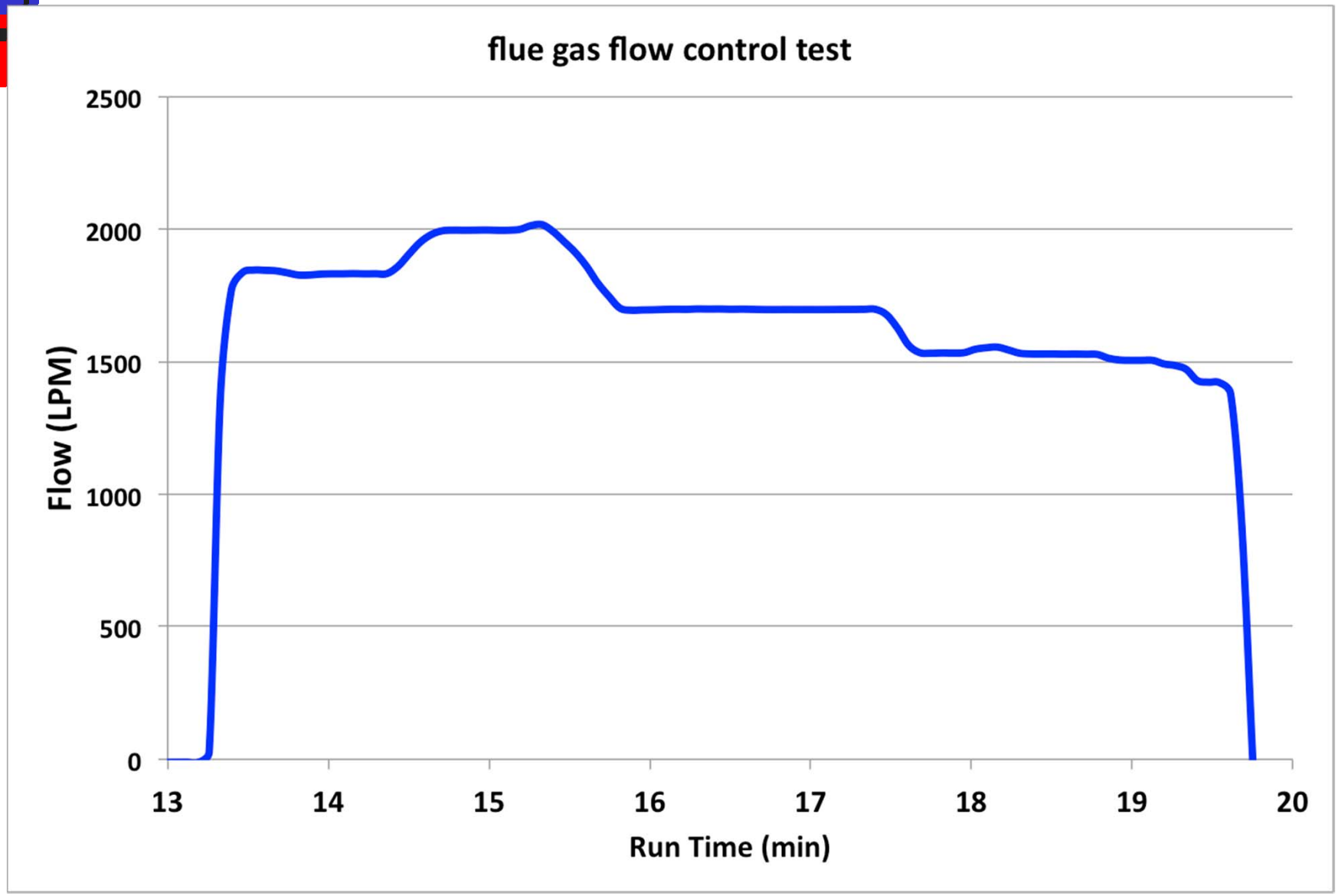

Flue gas flow control required the use of a valve and not a damper.

Sorbent Flow Instability –Pressure Effects

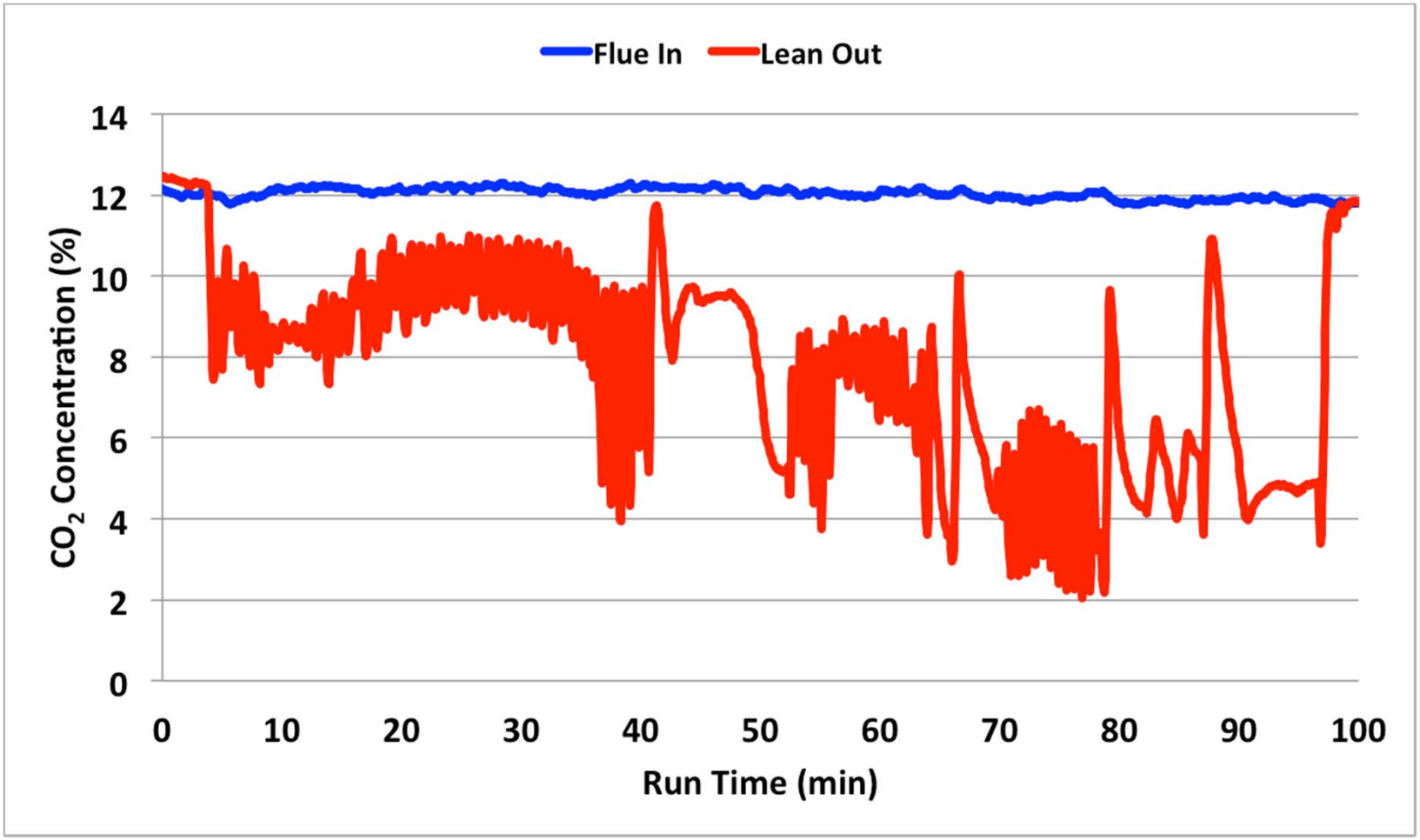

Pressure fluctuations in the reactor can interrupt sorbent flow which can vary the CO_2 capture rate.

Sorbent Flow Instability – Moisture Condensation

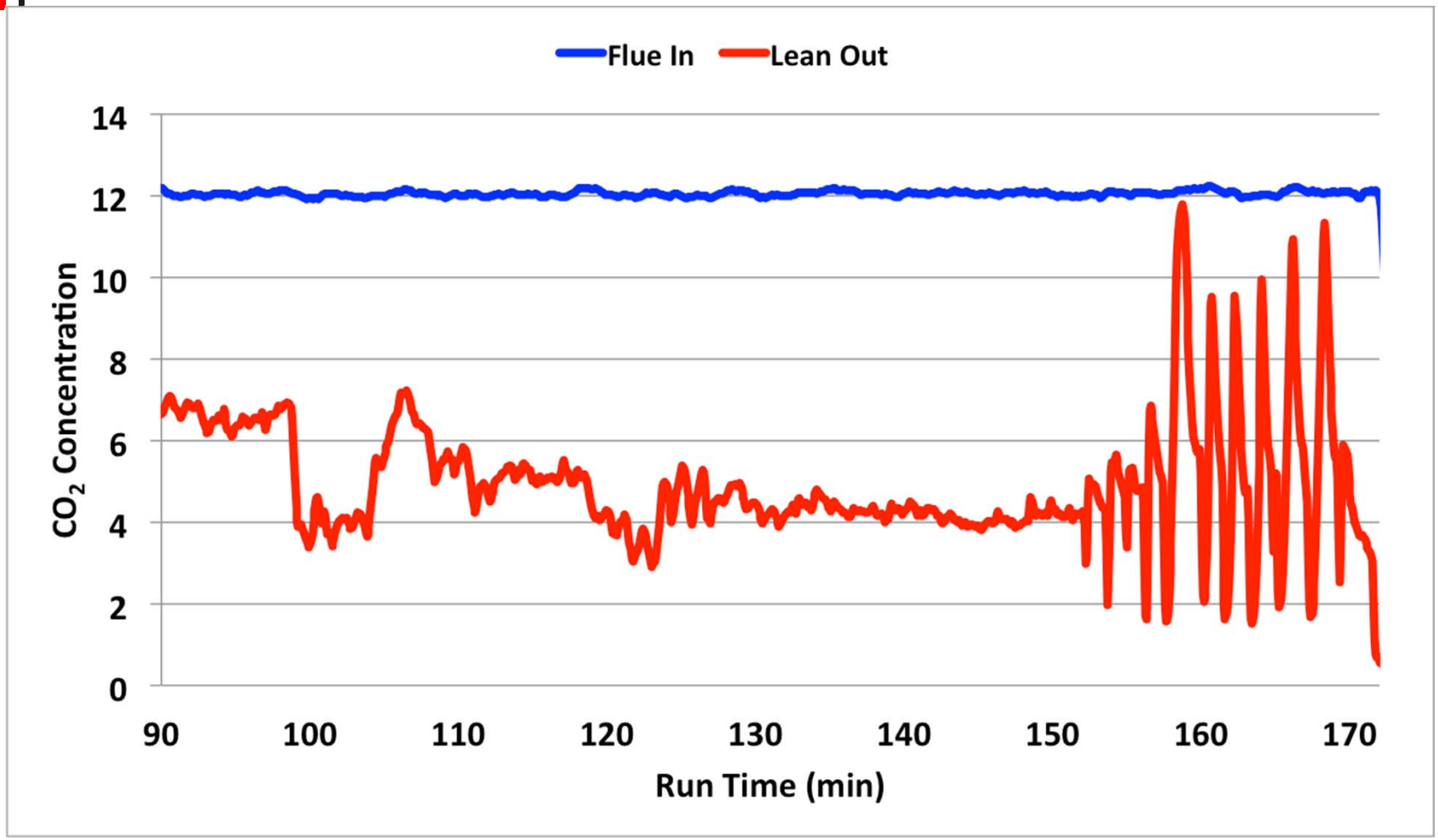

Condensation of moisture in the reactor can interrupt sorbent flow which can vary the CO_2 capture rate.

Stable Solid Flow

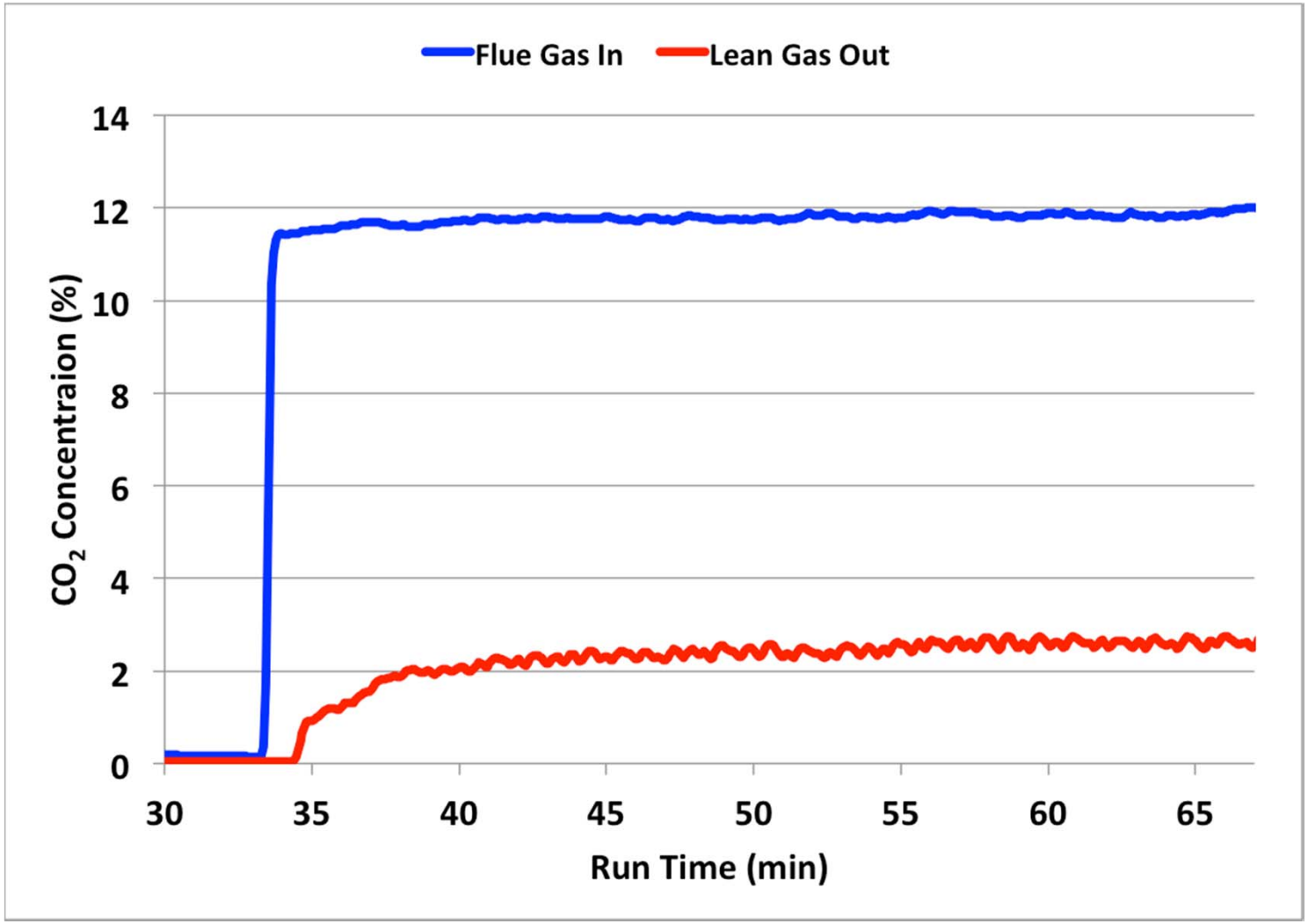

Stable flow can be achieved by preventing moisture condensation and proper pressure at various locations.

Temperature Profiles in the Reactor Column

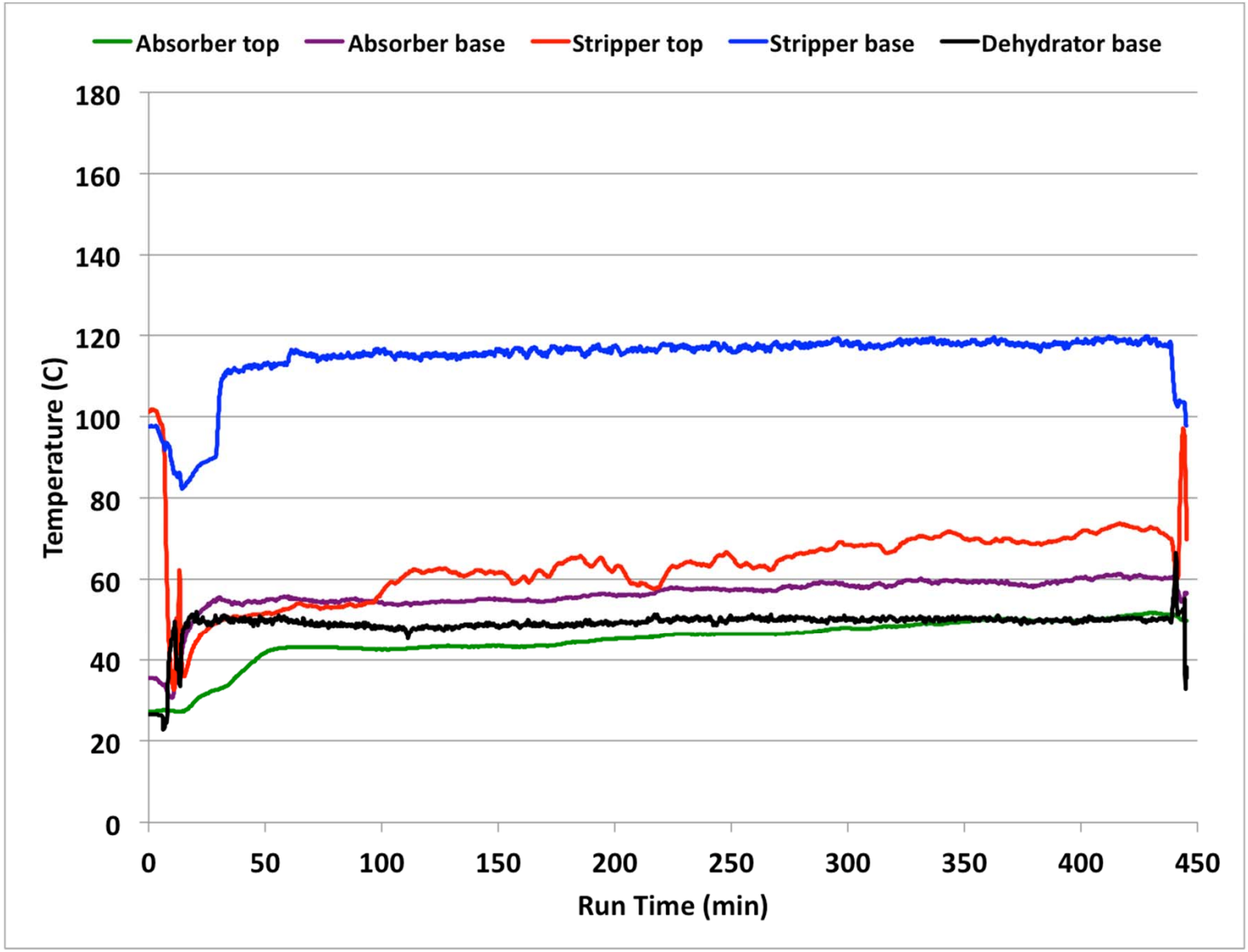

Design and Operating Temperatures

Parameter	Design Value	Operation Nominal Value
Adsorber temperature (°C)	20 to 30	50 to 60
Stripper temperature (°C)	100 to 120	120
Dehydrator top temperature (°C)	120	130
Cold Sorbent temperature (°C)	25 to 35	45 to 50

CO_2 Capture Efficiency

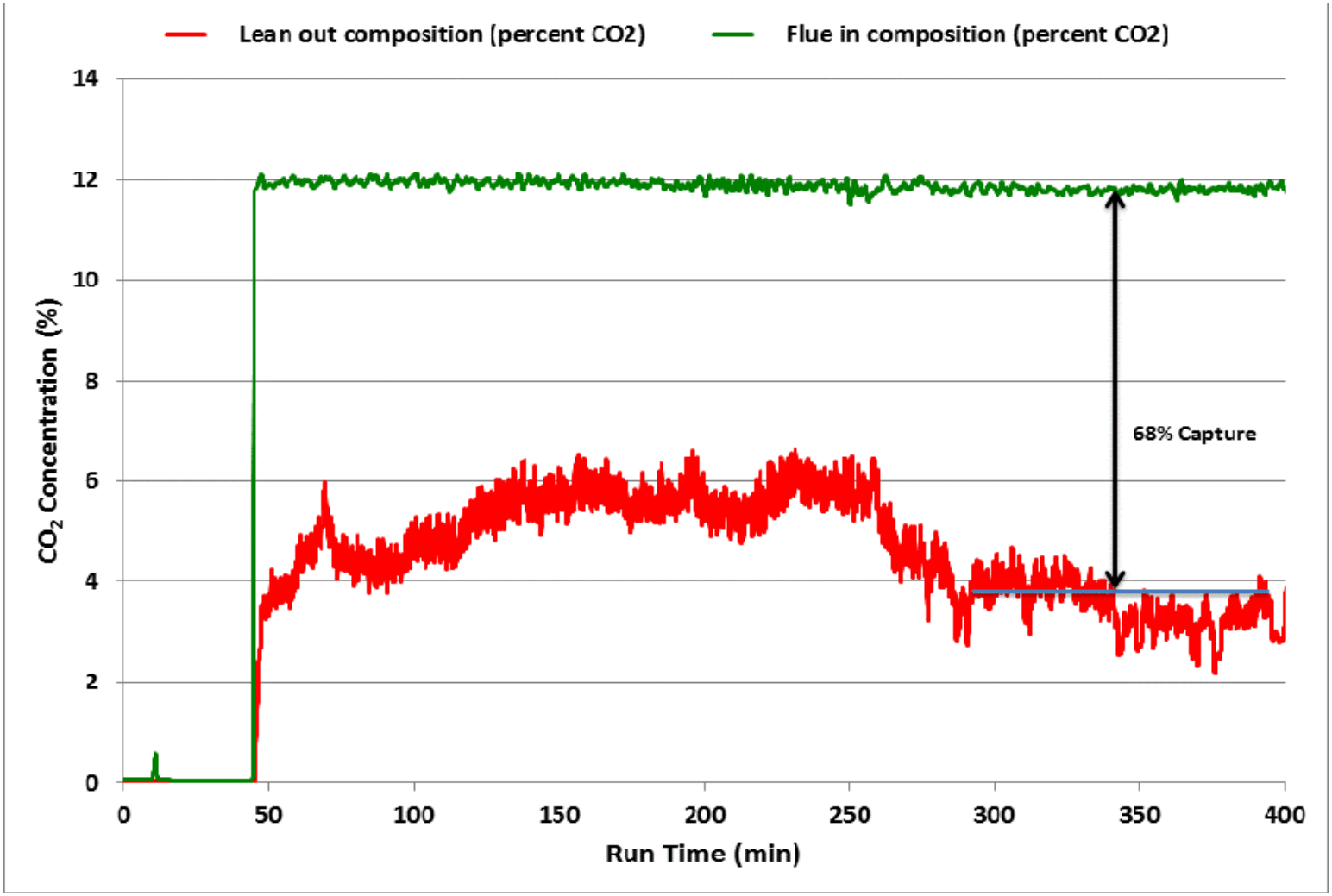

Temperature of the Adsorber

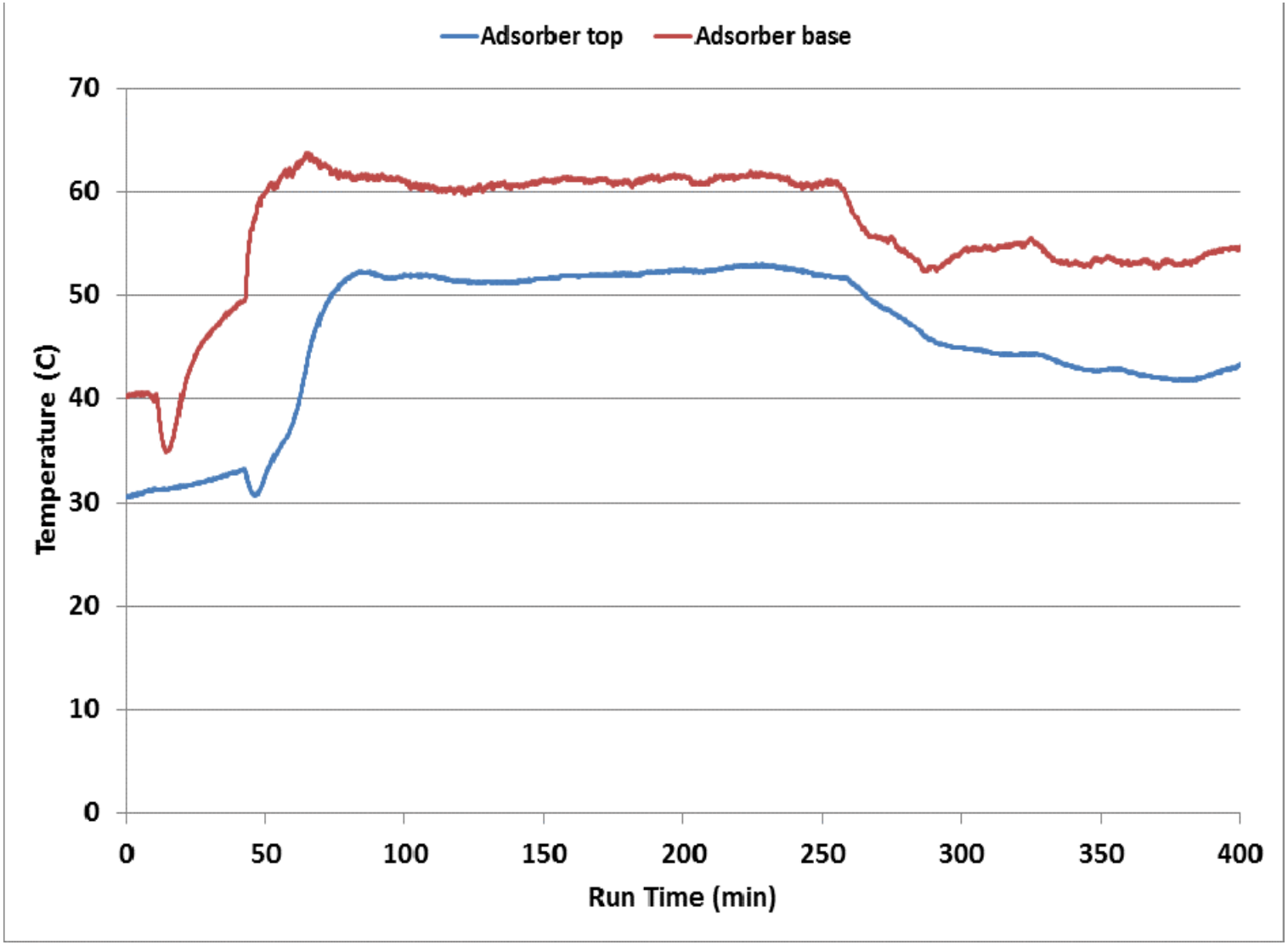

Sorbent is heated by CO_2 adsorption – adsorber base hotter than top.

Capture Efficiency vs Adsorber Temperature

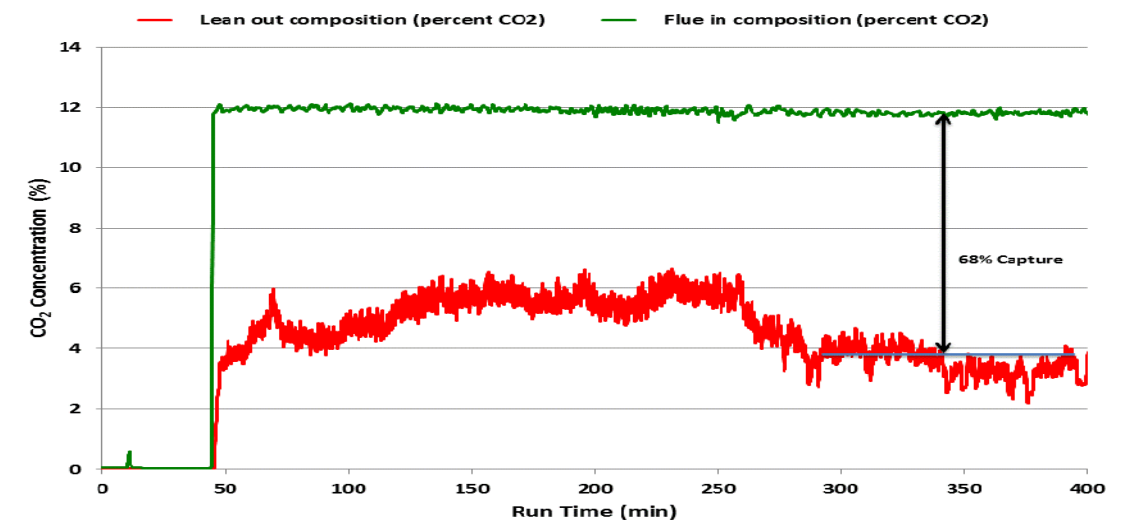

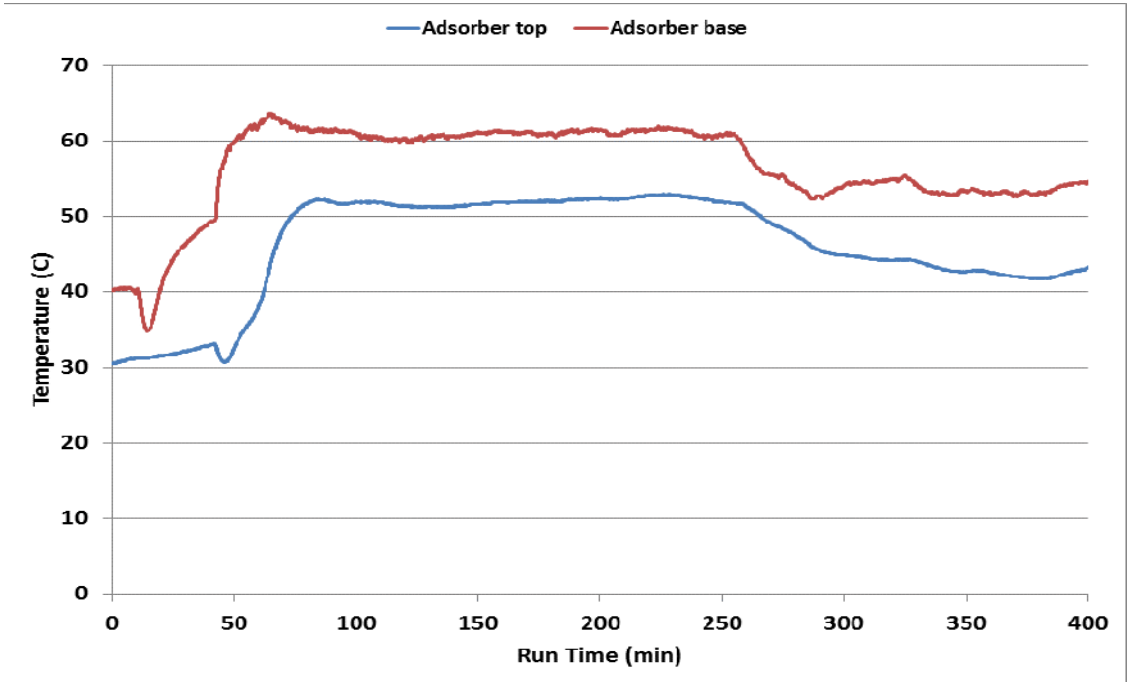

Stable Operation

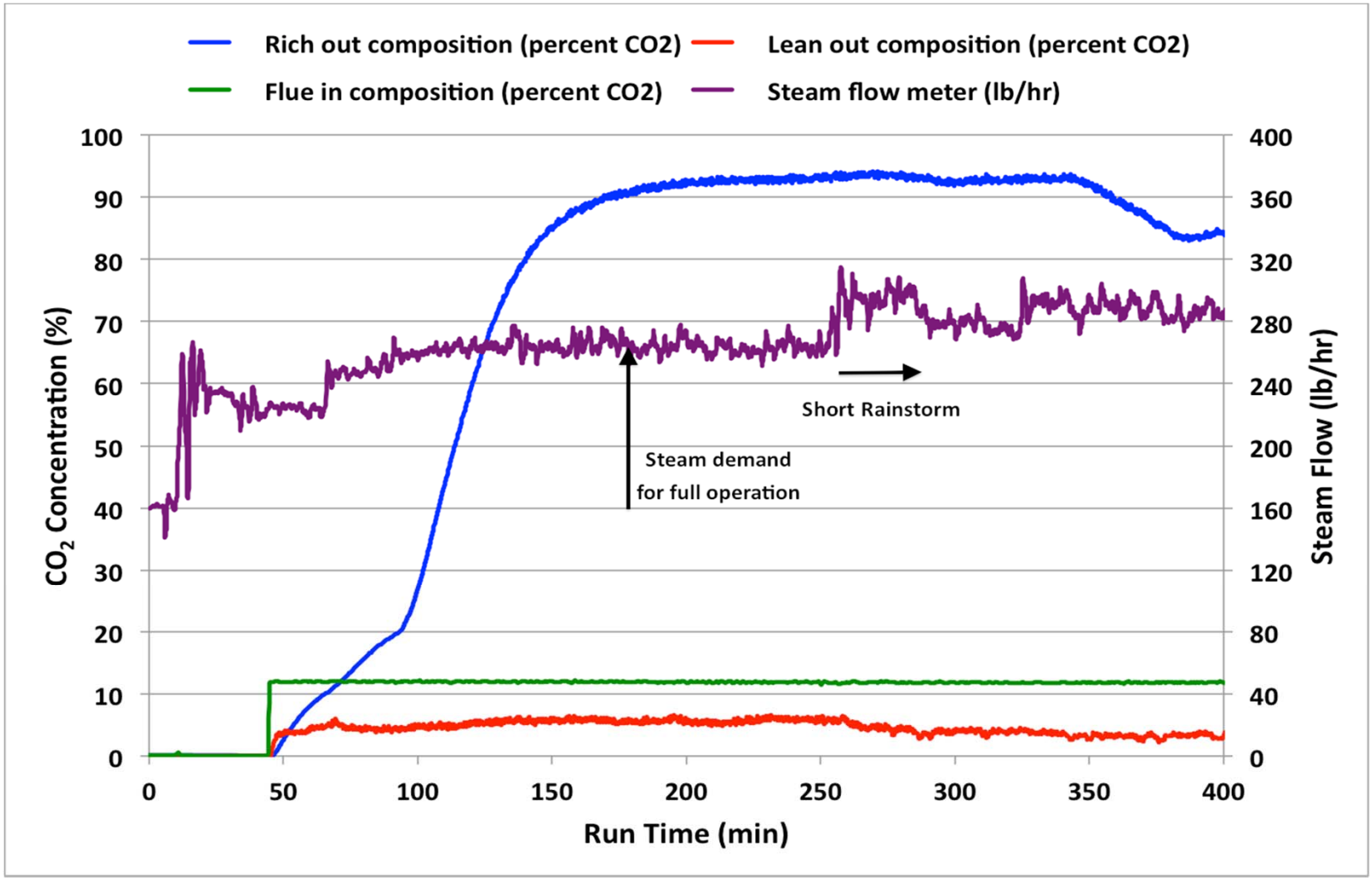

Adsorber not insulated; Sorbent temperature affect the CO_2 capture rate; rainstorm cools the adsorber – temperature is lowered and capture efficiency increases; steam demand in the column increases.

Parameters Affecting CO_2 Capture Efficiency

- Adsorber temperature.
  - Temperature at NCCC (50 to 60°C), higher than at SRI or at Toledo (10 to 30°C).
- Residence time in adsorber.
  - Residence time at NCCC was ~16 s compared to previous tests (~24 s).
  - Height was shortened to provide increased disengagement section at pneumatic transport.
- Spacing in the structural packing.
- Rapid adsorption – desorption equilibrium
- Solids/Gas ratio - Similar ratio as previously.

CO_2 Adsorption Isotherms

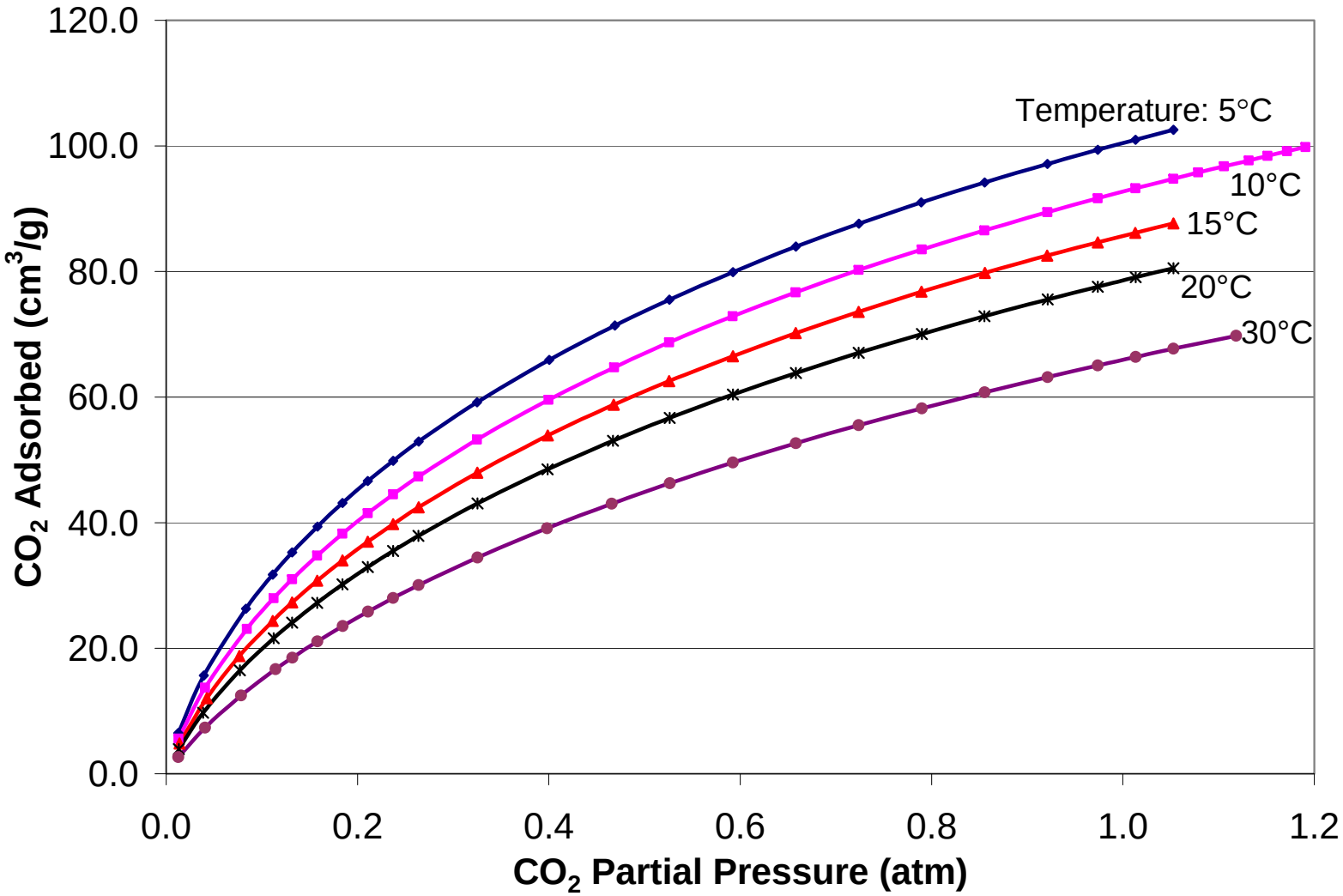

100 cm^3/g = 20 wt% CO_2

CO_2 Adsorption vs Temperature

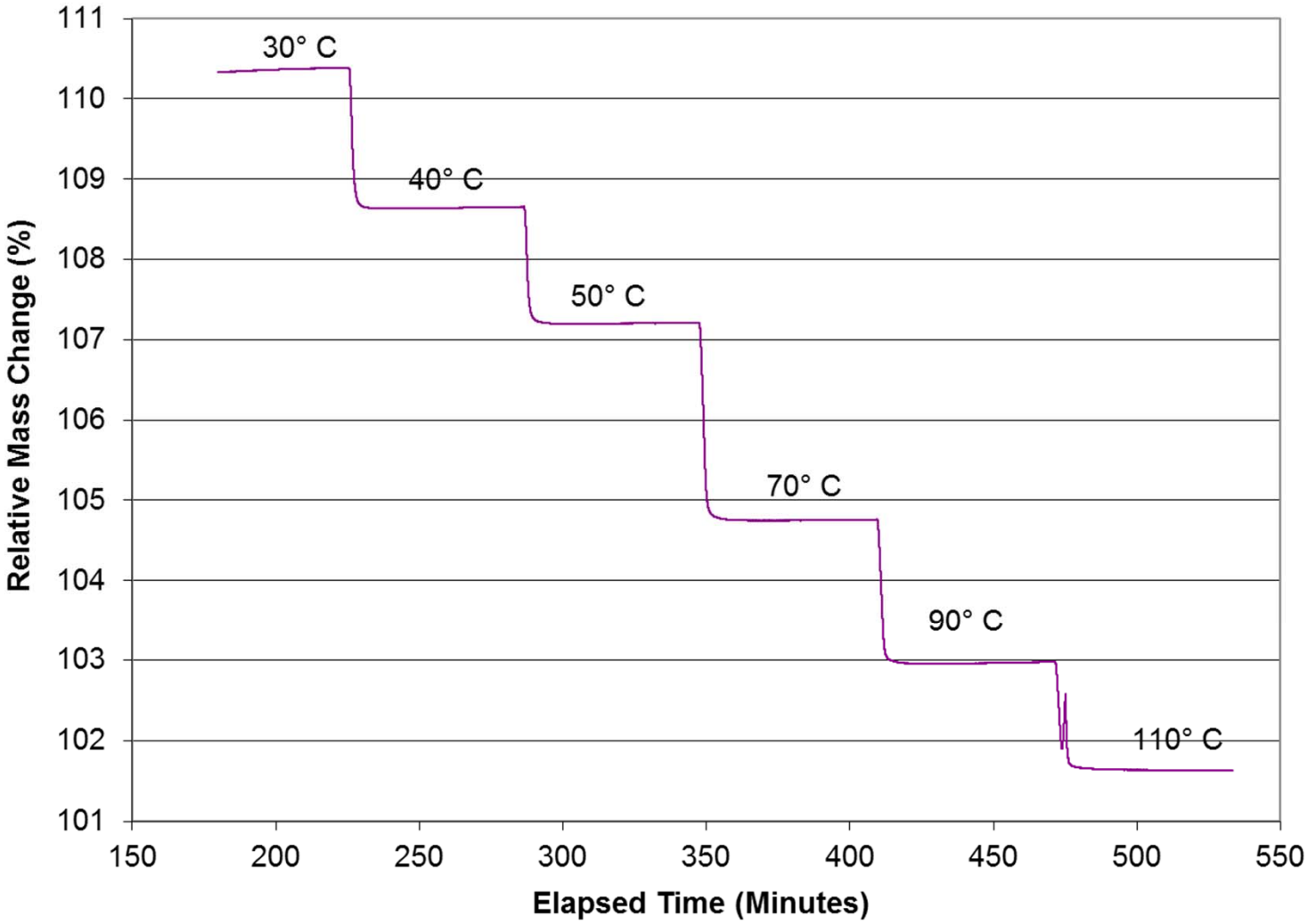

Sorbent is heated in 100% CO_2 atmosphere; adsorption capacity is a strong function of temperature.

Removal of CO_2 from Air-CO_2 Mixture

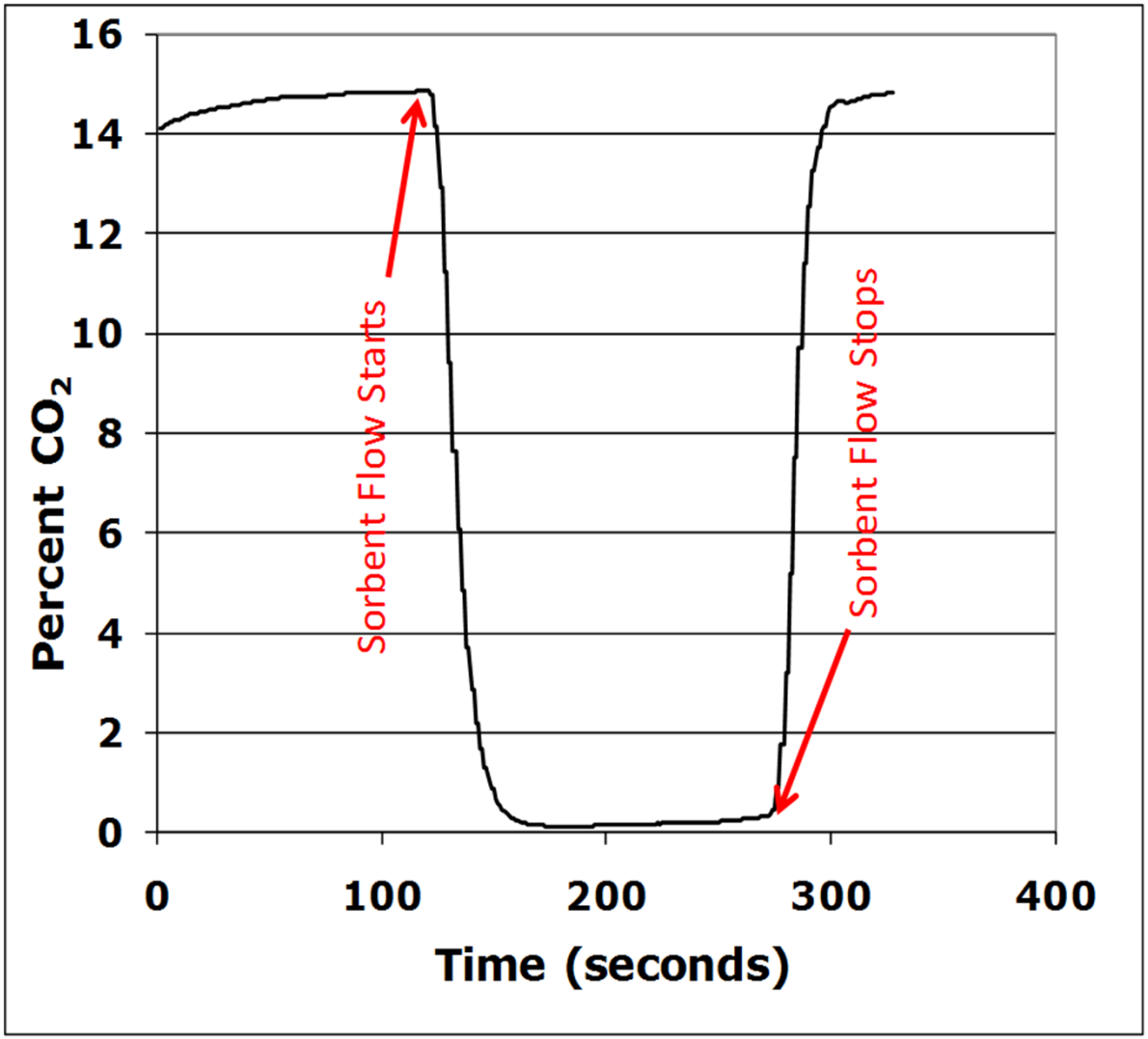

Evolution of CO_2 in the Stripper

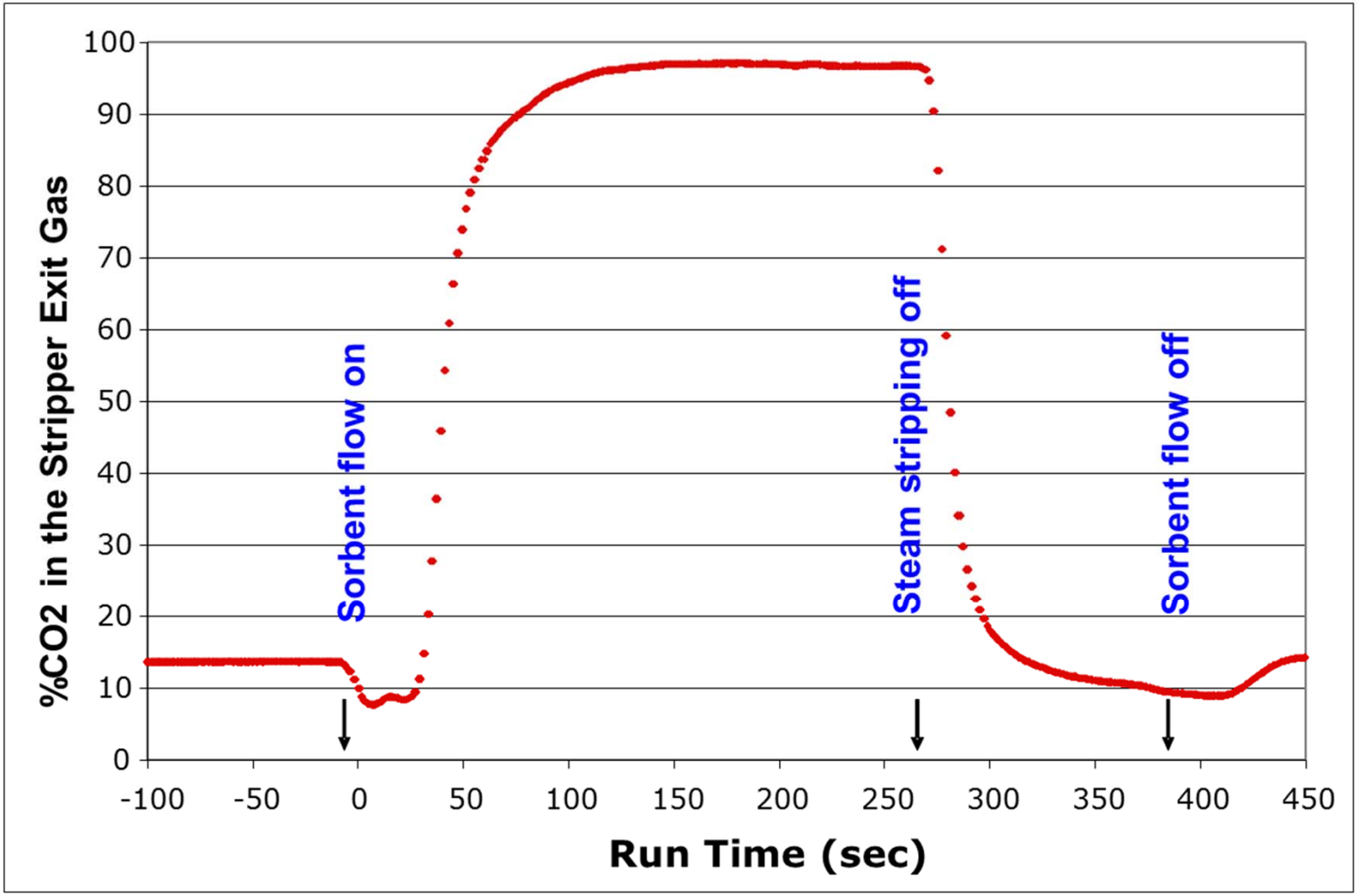

Heat of Adsorption for CO_2

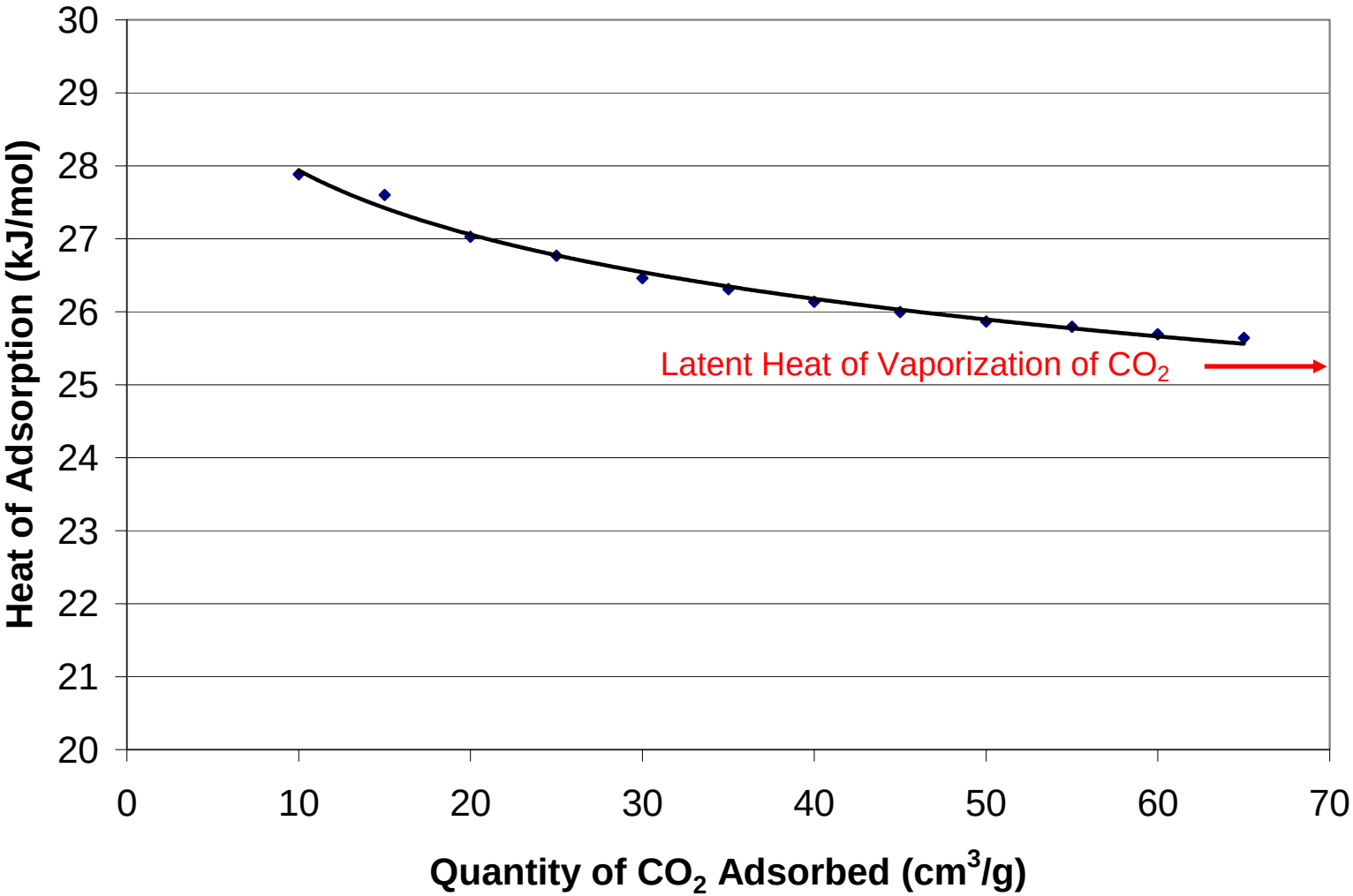

Steam Demand Measurement

- Steam (40 psig) is supplied to the reactor column from NCCC supply:
  - Sorbent preheater.
  - Generating steam for direct steam injection to the stripper.
  - Sorbent dehydrator. Steam recovered in the dehydrator can be used to preheat the sorbent.
- Low steam flow for each demand. A vortex meter measured total steam supplied.

Baseline Steam Consumption

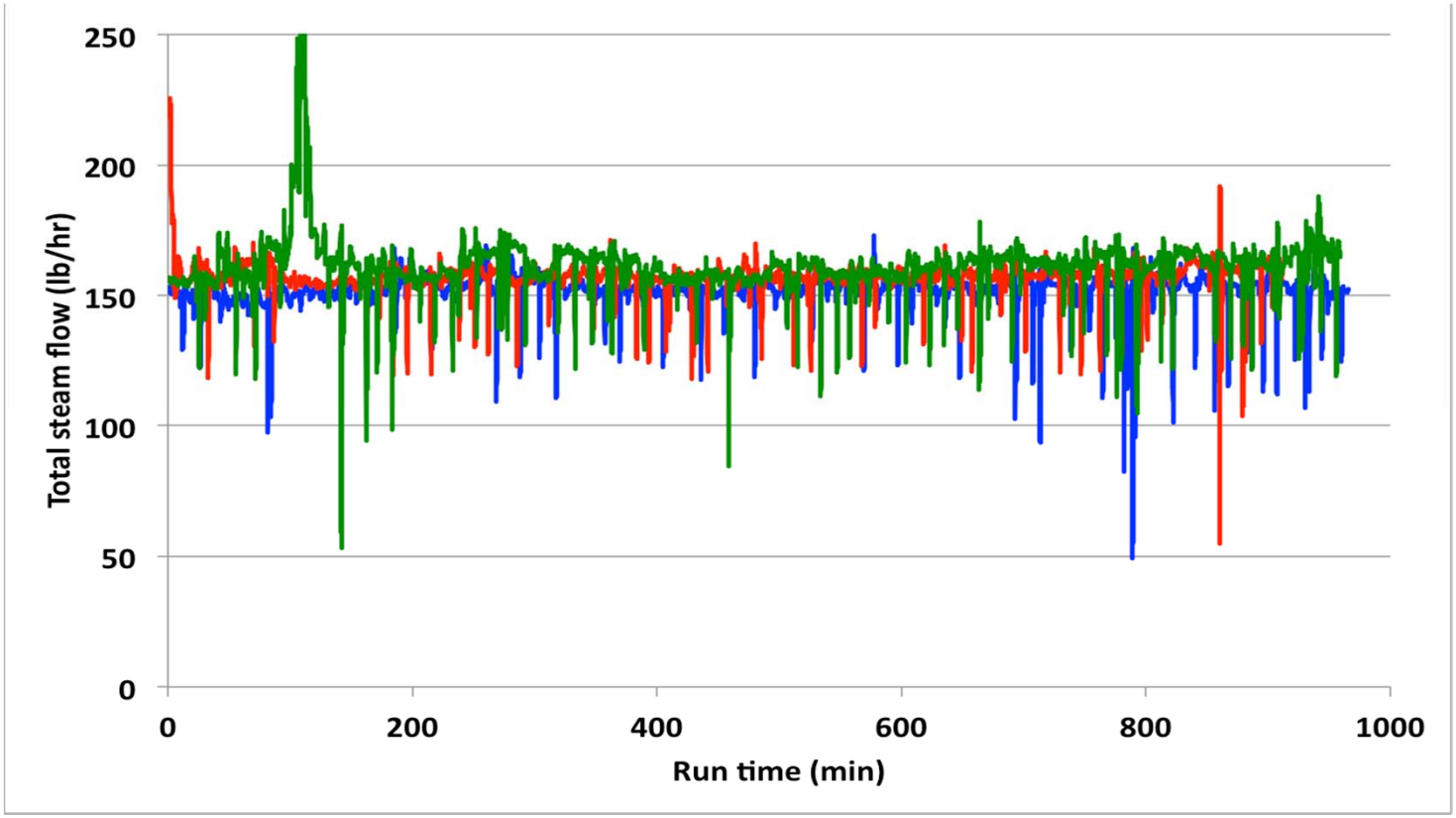

Steam was measured with no sorbent or flue gas flows at 3 different nights. Possible heat losses: Reactor areas that are not insulated; loss of steam through the condensate traps.

Steam Demand vs Sorbent Circulation Rate

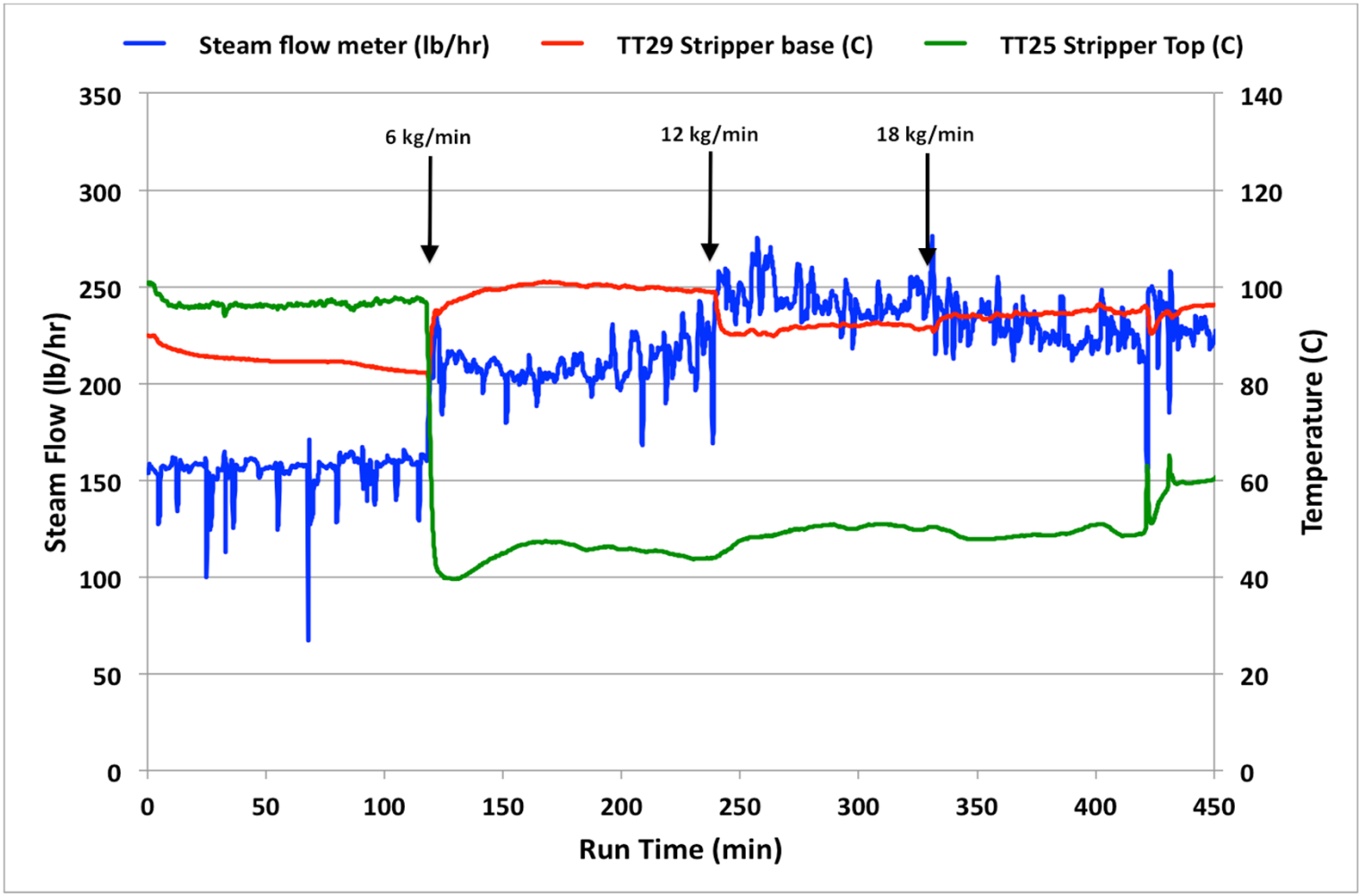

Sorbent is heated by CO_2 adsorption – adsorber base hotter than top.

Steam Generation from Water

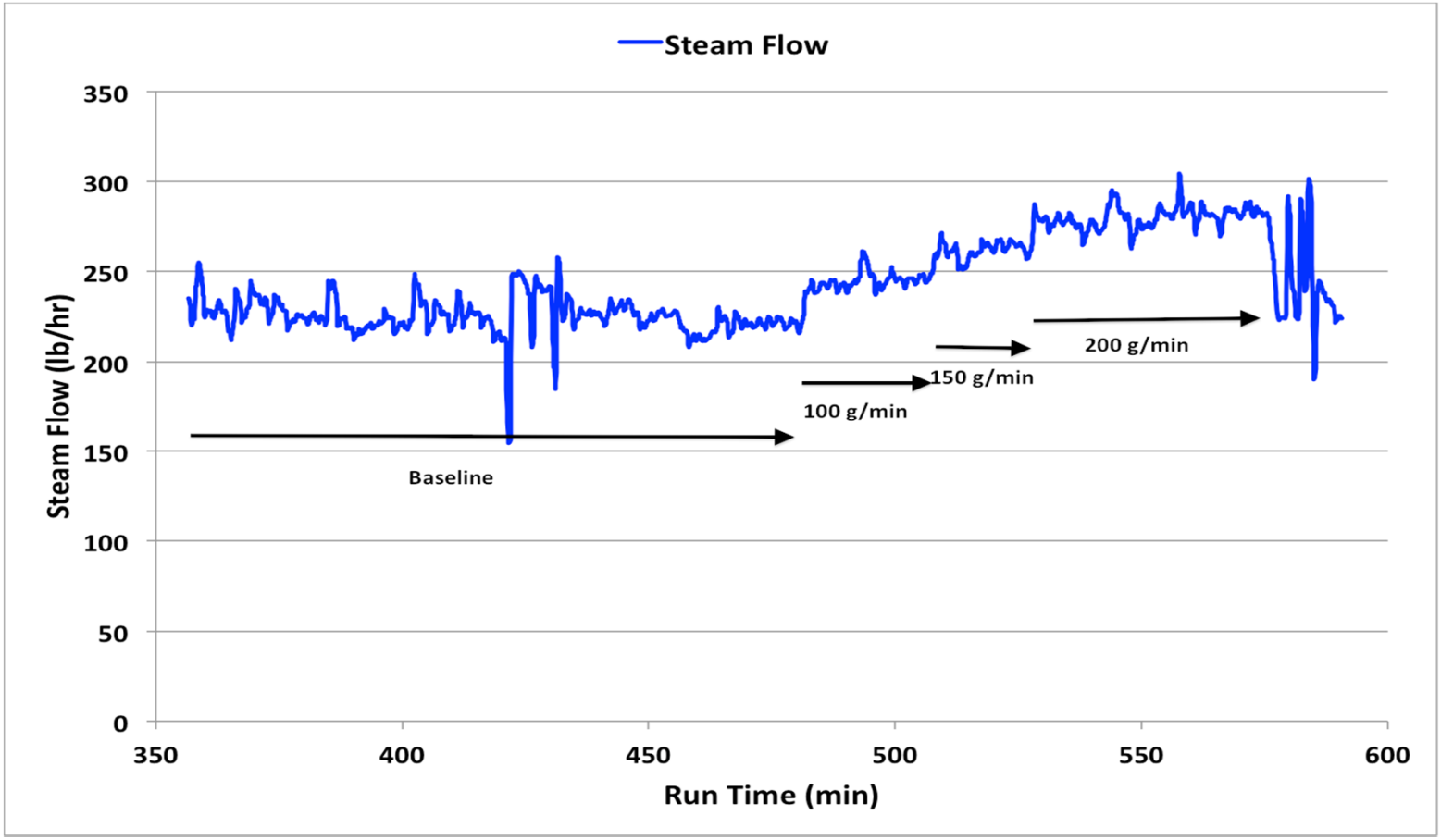

Water Injection Rate (g/min)	Steam Generated (lb/hr)	Increase in steam load (lb/hr)	Efficiency
100	13	23	57%
150	20	41	49%
200	26	59	45%

Steam Demand During CO_2 Capture

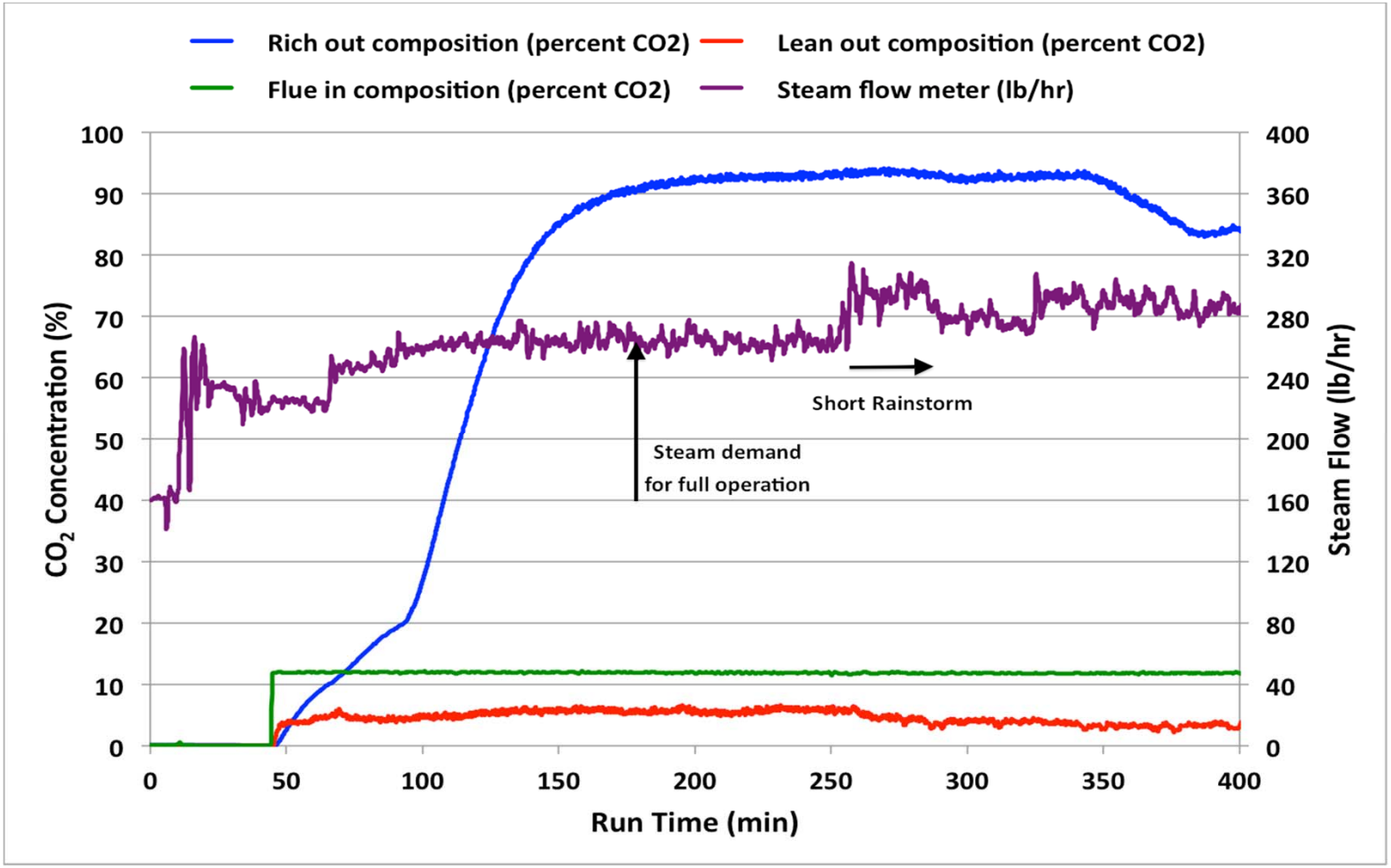

Steam Demand for CO_2 Desorption

- Steam demand of ~280 lb/h:
  - ~160 lb/h for baseline demand
    - Large systems will be adiabatic
  - ~80 lb/h for sorbent preheating by 60° C
    - For heating 15 kg/min sorbent flow – 50 lb/h steam
  - ~40 lb/h for generating of 20 lb/h steam for injection into the stripper.
- CO_2 desorbed: 24 lb/h – increased at a high capture efficiency
- Sensible heat dominates sorbent heating.
  - Steam/CO_2 ratio: 2 lb/lb; Preheat by heat recovery
  - stripper steam: 0.8 lb/lb CO_2; Goal is 0.5 lb steam/lb CO_2

Lessons Learned at NCCC Testing

- Pneumatic lift operation
  - Disengagement at the top of the adsorber due to bouncy nature of the sorbent.
  - Use resilient material at the point of impact.
  - Used the structural packing as an impact separator.
- Pressure balance inside the column
  - The pressure at the flue gas feed and return points highly variable.
  - Caused instability in the column operation.
  - Pressure could be controlled better by using backpressure control valves.
- Heat recovery step requires pressure balance at the dehydrator stage.

Conclusions

- A CO_2 capture efficiency of 67% was achieved;
  - 90% capture efficiency is achievable by decreasing the sorbent temperature and increasing the adsorber height.
- A CO_2 purity of 93% was achieved;
  - >98% CO_2 purity is feasible if the transition section is modified to have a tall height and narrow cross section.

Conclusions (continued)

- Steam demand was larger than anticipated due to severe external heat losses.
  - Data analysis of the data indicates that the heat requirements can be close to the original assumed value of 50 kJ/mole of CO_2 when a more adiabatic system is used.
- Sorbent breakage was mainly due to high velocity impact collisions in the pneumatic transport and disengagement sections.
  - Addition of a soft material at the point of impact reduced the sorbent breakage.
- The issues encountered in the skid operation were mostly mechanical in nature.

Recommendations

- Be allowed to proceed to design phase of Budget Period 1.
- A system larger than current bench scale is recommended:
  - For accurate heat requirement measurements
  - Demonstrate bucket elevator sorbent lift.
- Recommend a pilot system of 0.5 MWe capacity (12x of current bench scale)
  - Conservative design than current bench scale
  - Construction and installation cost within the proposed values.

Preliminary Techno-Economic Analysis

- Steam-Pro modeling was used to generate the equipment sizing and heat and material flows.
- Use DOE cost models.
- Base case is an air-fired greenfield supercritical PC plant (660 MWe nominal) with no CO_2 capture.
- Compare a similar-size plant using CO_2 capture with carbon sorbent subsystem.

Block Flow Diagram

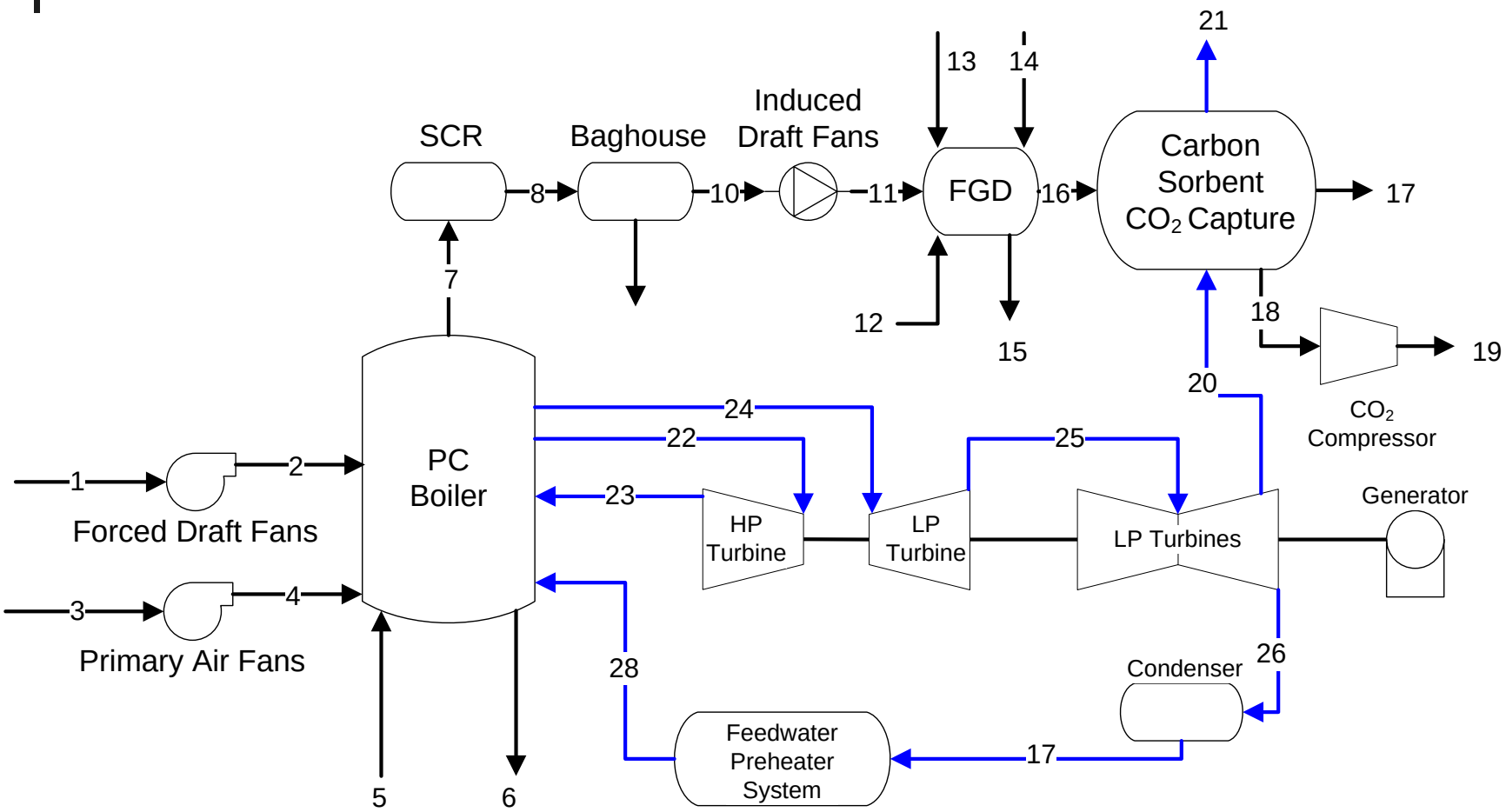

Comparison of Baseline Power Plant (No CO_2 Capture)

	NETL	SRI
CO_2 Capture	**No**	**No**
Gross Power Output (kW)	580,260	581,034
Auxiliary Power Requirement (kW)	30,110	31,016
Net Power Output (kW)	**550,150**	**550,018**
Net Plant HHV Efficiency (%)	**39.1%**	**38.9%**
Net Plant HHV Heat Rate (Btu/kW-hr)	8,721	8,859
Coal Flowrate (lb/hr)	411,282	414,000
CO_2 Emissions (lb/MWh)	1,773	1,790
Total Plant Cost ($ x 1000)	866,391	872,118
Total Plant Cost ($/kW)	1,575	1,586
LCOE (¢/kWh)	**6.33**	**6.40**

2007 Basis

Comparison of Baseline Power Plant (CO_2 Capture by Benchmark MEA)

	NETL	SRI
CO_2 Capture	**Yes**	**Yes**
Gross Power Output (kW)	663,445	679,911
Auxiliary Power Requirement (kW)	117,450	129,485
Net Power Output (kW)	**545,995**	**550,426**
Net Plant HHV Efficiency (%)	**27.2%**	**27.1%**
Net Plant HHV Heat Rate (Btu/kW-hr)	12,534	12,590
Coal Flowrate (lb/hr)	586,627	594,000
CO_2 Emissions (lb/MWh)	254	252
Total Plant Cost ($ x 1000)	1,567,073	1,586,765
Total Plant Cost ($/kW)	2,870	2,883
LCOE (¢/kWh)	**11.48**	**11.58**

2007 Basis

Process Flow Diagram for CO_2 Capture by Carbon Sorbent

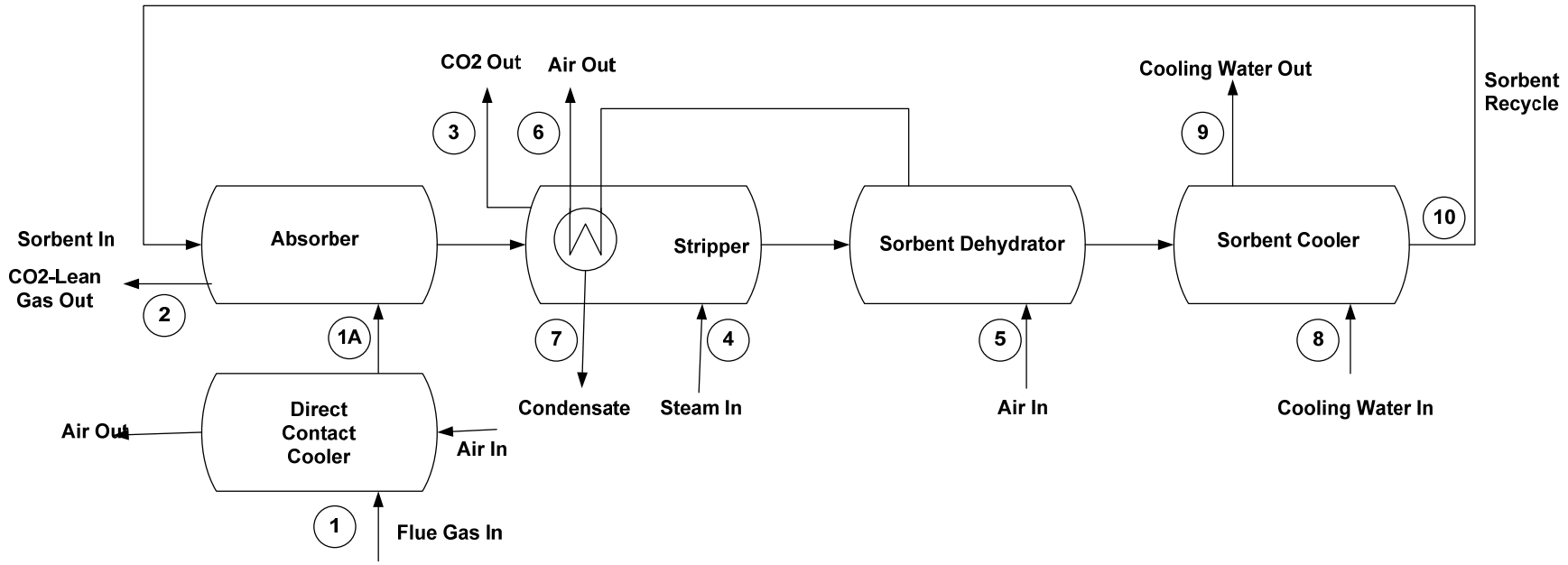

Stream Table CO_2 Capture by Carbon Microbead Sorbent Process

	1	1A		2	3	4
Stream	Flue Gas In	Adsorber Gas In	DCC Condensate out	Flue Gas Out	CO2 Product Out	Steam In
Gas Mole Fraction						
CO2	0.127	0.148		0.016	0.971	
H2O	0.158	0.023		0.024	0.029	1.000
N2	0.675	0.783		0.902	0.000	
O2	0.032	0.037		0.058	0.000	
Gas Flow Rate (kg.mole/h)	90,037	77864		73380	10663	18260
Gas Flow Rate (Kg/h)	2,583,164	2,337,282		2,072,105	461,077	328,680
Liquid Flow Rate (Kg/h)	0		224,154	0	0	
Solids Flow Rate (Kg/h)	0			0	0	
Temperature (°C)	55	30		20	50	105
Pressure (psia)	16	15.7	14.7	14.7	14.7	15.7
Average Molecular Weight	28.69	30.03	18	28.25	43.2	18

Stream Table CO_2 Capture by Carbon Microbead Sorbent Process

Stream	5	6	7	8	9	10
	Air In	Air Out	Steam Condensate Out	CW In	CW Out	Sorbent Recycle
Gas Mole Fraction						
CO2						
H2O		0.100				
N2	0.790	0.711				0.790
O2	0.210	0.189				0.210
Gas Flow Rate (kg.mole/h)	14681	8929				6601
Gas Flow Rate (Kg/h)	423,400	247,833	0	0	0	190,373
Liquid Flow Rate (Kg/h)			323,076	10,242,798	10,242,798	
Solids Flow Rate (Kg/h)						13,037,640
Temperature (°C)	20	50	50	20	40	30
Pressure (psia)	15	14.7	14.7	-	15	14.7
Average Molecular Weight	29	27.8	18	18	18	12

Major Equipment List

No.	Description	Type	Design Condition	Quantity
1	Adsorber section	Packed column	44 ft wide x 60 ft tall	4
2	Transition section	Packed column	14 ft wide x 60 ft tall	4
3	Preheater	Shell & tube heat exchanger	22 ft wide x 34 ft tall	4
4	Stripper	Packed column	22 ft wide x 26 ft tall	4
5	Sorbent dehydrator	Packed column	22 ft wide x 26 ft tall	4
6	Sorbent cooler	Shell & tube heat exchanger	22 ft wide x 34 ft tall	4
7	Flue gas cooler	Direct contact cooler		1
7	Sorbent Vertical Lift	Bucket elevator	33 kg/s, 250 ft lift	4
8	CO_2 product stream fan	Centrifugal fan	30,000 cfm	4
9	Column internals	Structural packing	146,650 cubic feet	4

Plant Performance Summary (CO_2 Capture by Carbon Sorbent)

Parameter	Carbon Sorbent	Unit
Gross Plant Power Output		
Steam Turbine Gross Power	651,704	kWe
Auxiliary Load		
Coal Handling & Conveying	589	kWe
Limestone Handling & Reagent Preparation	1,181	kWe
Pulverizers	4,021	kWe
Ash Handling	930	kWe
Primary Air Fans	1,461	kWe
Forced Draft Fans	1,533	kWe
Induced Draft Fans	14,144	kWe
SCR	253	kWe
Baghouse	642	kWe
FGD Pumps & Agitators	5,489	kWe
Auxiliaries	6,524	kWe
CO2 Compressor	47,034	kWe
Miscellaneous Balance-of-Plant	2,395	kWe
Steam Turbine Auxiliaries	0	kWe
Condensate Pumps	1,013	kWe
Circulating Water Pumps	4,848	kWe
Cooling Tower Fans	4,982	kWe
Transformer Losses	1,629	kWe
Additional Auxillary Power	4,024	kWe
Total	102,691	kWe
Net Plant Performance		
Auxiliary Load	102,691	kWe
Net Plant Power	549,013	kWe
Net Plant Efficiency (HHV)	33.5%	
Net Plant Heat Rate (HHV)	10,189	Btu/kWhr
Coal Feed Flow rate	479,520	lb/hr
Thermal Input1	1,639,463	kWth
Limestone Sorbent Feed	47,591	lb/hr
CO2 Emitted	111,869	lb/hr
CO2 Captured	1,006,821	lb/hr
CO2 Removal	90.0%	
Water Requirement	978	pounds/s

2011 Basis

Plant Cost Summary
(CO_2 Capture by Carbon Sorbent)

Bare Erected Cost	**$ 10^6**	**$/kW**
Coal & Sorbent Handling	$ 42.99	
Coal & Sorbent Prep & Feed	$ 20.43	
Feedwater & Misc. BOP Systems	$ 88.23	
PC Boiler	$ 340.78	
Flue Gas Cleanup	$ 150.34	
HRSG, Ducting, & Stack	$ 42.60	
Steam Turbine Generator	$ 141.46	
Cooling Water System	$ 42.45	
Ash/Spent Sorbent Handling System	$ 14.82	
Accessory Electric Plant	$ 58.89	
Instrumentation & Controls	$ 24.81	
Improvements to Site	$ 14.55	
Buildings & Structures	$ 62.09	
CO2 Capture + Compression	$ 144.21	
Total Cost	**$ 1,188.6**	**$ 2,165.1**
Fees and Contingencies	**$ 10^6**	**$/kW**
Engineering Fees	$ 109.4	$ 199.2
Process Contingency	$ 28.3	$ 51.5
Project Contingency	$ 172.7	$ 314.5
Total Plant Cost (TPC)	**$ 1,499.0**	**$ 2,730.3**
Percent Increase in TPC		
Owners Cost, Financing Cost	$ 265.3	$ 483.3
Preproduction Costs	$ 46.4	$ 84.4
Inventory Captial	$ 33.1	$ 60.3
Initial Catalyst & Chemicals (w/equipment)	$ 21.7	$ 39.6
Land	$ 0.9	$ 1.6
Total Overnight Cost (TOC)	**$ 1,866.4**	**$ 3,399.5**
Total As Spent Cost (TASC)	**$2,127.68**	**$3,875.47**

2011 Basis

O & M Cost Summary
(CO_2 Capture by Carbon Sorbent)

Production Costs	$ 10^6	$/kW
Operating Labor	$ 5.6	$ 10.1
Maintenance Labor	$ 9.6	$ 17.4
Administrative & Support Labor	$ 3.8	$ 6.9
Taxes and Insurance	$ 30.2	$ 54.9
Total Fixed Operating Costs	**$ 49.1**	$ 89.3
Maintenance Material	$ 14.3	$ 26.1
Total Operating & Maintenance	**$ 63.4**	**$ 115.5**
Coal ($/MMBtu) @68.60/ton	**$ 122.5**	**$ 223.1**
Other Fuel		
Water (1000 gal) @1.67/1000 gal	$ 0.51	$ 0.9
Consumables (Inc. Chemicals)	$ 26.74	$ 48.7
Waste Disposal	$ 4.14	$ 7.5
Total Consumable Operating	**$ 153.9**	**$ 280.2**
By-Product Credit (Gypsum)	**$ -**	**$ -**
Total Variable Operating Cost	**$ 45.73**	0.0112
Total Production Cost	**$ 217.3**	**$ 395.7**

2011 Basis

Cost Summary
(CO_2 Capture by Carbon Sorbent)

Power Plant Cost Summary		
Capacity Factor		0.85
Capital Charge Factor		0.1243
20-year Levelization Factors		
Fuel		1.2089
Non-Fuel Variable O&M		1.1618
Fixed O&M		1.1618
Plant Operating Life	years	30
Power Production @100% Capacity	GWh/yr	4809
CO2 Captured (10^6 metric tonnes/yr)		0
Power Plant Capital	c/kWh	5.68
Power Plant Fuel	c/kWh	3.00
Variable Plant O&M	c/kWh	1.12
Fixed Plant O&M	c/kWh	1.20
Power Plant Total	c/kWh	10.99
CO2 Transport and Storage	c/kWh	0.83
BOTTOM LINE TOTAL	c/kWh	11.82
Increase in COE	%	0.458907
CO_2 Emissions	lb/MWh	203.8
CO_2 Captured	$/Ton	45.0

2011 Basis

Comparison of Costs

Power Plant Cost Summary		No Capture	Econamine	Carbon Sorbent
Capacity Factor		0.85	0.85	0.85
Capital Charge Factor		0.12	0.12	0.12
20-year Levelization Factors				
Fuel		1.21	1.21	1.21
Non-Fuel Variable O&M		1.16	1.16	1.16
Fixed O&M		1.16	1.16	1.16
Plant Operating Life	years	30.00	30.00	30.00
Power Production @100% Capacity	GWh/yr	4818.16	4821.73	4809.36
Power Plant Capital	¢/kWh	3.84	7.32	5.68
Power Plant Fuel	¢/kWh	2.58	3.70	3.00
Variable Plant O&M	¢/kWh	0.73	1.24	1.12
Fixed Plant O&M	¢/kWh	0.95	1.56	1.20
Power Plant Total	¢/kWh	8.10	13.83	10.99
CO2 Transport and Storage	¢/kWh		1.02	0.83
BOTTOM LINE TOTAL	¢/kWh	8.10	14.85	11.82
Increase in COE	%	0.00	83.4%	45.9%
CO2 Emissions	lb/MWh		251.80	252.45
CO2 Captured	$/Tonne	0.00	66.17	44.99

2011 Basis

Summary

- Preliminary TEA shows:
  - The cost of CO_2 capture by the carbon sorbent is only 67% of the cost compared to benchmark MEA process.
  - Capital costs are ~50% of the capture cost.
  - Sorbent replacement cost is <10% of the operating cost.